ATP INDEX

COPYRIGHT © 2003

COPYRIGHT IS NOT CLAIMED AS TO ANY PART OF AN ORIGINAL WORK PREPARED BY A UNITED STATES GOVERNMENT OFFICER OR EMPLOYEE AS PART OF THAT PERSONS OFFICIAL DUTIES OR BY ANY OTHER THIRD PARTY OFFICER OR EMPLOYEE AS PART OF THAT PERSONS DUTIES.

"ATP" is a registered trademark of Aircraft Technical Publishers. All original authorship of ATP is protected under U.S. and foreign copyrights and is subject to written license agreements between ATP and its Subscribers.

ALL RIGHTS RESERVED. NO PART OF THIS PUBLICATION MAY BE REPRODUCED, STORED IN A RETRIEVAL SYSTEM, OR TRANSMITTED IN ANY FORM BY ANY MEANS, ELECTRONIC, MECHANICAL, PHOTOCOPYING, RECORDING OR OTHERWISE, WITHOUT PRIOR WRITTEN PERMISSION OF THE PUBLISHER.

NOTE

Please be aware that the material in this manual does not strictly follow the ATA code format. In order to catalog them according to ATA standards, ATP has recoded them. Please see the example(s) below.

EXAMPLE

Manufacturer's Coding	ATP Coding	Description Section	
21-29-30-33	21.29.30	33	NON-RETURN VALVE

Aircraft Technical Publishers
101 South Hill Drive
Brisbane, CA 94005

Customer Service
6AM-5PM PST M-F
(800)227-4610

ATP Grid Index to Manufacturer's Publications:

Raytheon Aircraft Co.
Hawker 800 & BAE 125-800A & 800B (Aircraft 258091 & Sub.)
Wiring Parts Catalog

Section	Topic
	General Information
	Title Page
	List of Chapters (Table of Contents)
	Manufacturer's Introduction
	Record of Revisions
	Record of Temporary Revisions
	Letter of Transmittal (Highlights of Changes)
	Service Bulletin/Modification Statement
	Vendor Names and Addresses
	Wiring Diagram Listing
	Electrical Ident Index
	Part Number Index
	Alpha
	Numeric
	Airframe Systems
21.00.00	Air Conditioning
21.00.00	List of Effective Pages
21.20.00	Distribution
21.20.10	03 Roof/Floor Valve and Recirculating Fan
21.30.00	Pressurization Control
21.30.10	02 Cabin Pressurization Control Fan
21.30.10	04 Cabin Pressurization Control Fan
21.31.00	De-Pressurization
21.31.10	07 Cabin Depressurization
21.60.00	Temperature Control
21.60.10	08 Cabin Air Temperature Control
21.60.10	10 Cabin Air Temperature Control

Copyright ® Aircraft Technical Publishers

Section	Topic
21.60.10	11 Cabin Air Temperature Control
21.60.20	02 Cabin Temperature Indicator
21.60.20	03 Cabin Temperature Indicator
22.00.00	Autoflight
22.00.00	List of Effective Pages
22.10.00	Autopilot
22.10.40	53 Flt Ctrl System (Rudder/Elevator Servos No. 1 & 2)
23.00.00	Communications
23.00.00	List of Effective Pages
23.30.00	Passenger Address, Entertainment & Comfort
23.31.00	Passenger Entertainment System
23.31.10	58 Stereo Radio Cassette Plug Break
23.31.10	65 Compact Disc Player Plug Break
23.31.20	52 Stereo Radio/Cassette Module
24.00.00	Electrical Power
24.00.00	List of Effective Pages
24.20.00	AC Generation
24.21.00	Secondary Power Supplies
24.21.17	03 Secondary Power Supplies 1250VA Inverters
24.21.17	04 Secondary Power Supplies 1250VA Inverters
24.21.17	04 Secondary Power Supplies 1500VA Inverters
24.30.00	DC Generation
24.30.10	02 DC Power No. 1 Generating System
24.30.20	02 DC Power No. 2 Generating System
24.30.20	03 DC Power No. 2 Generating System
24.50.00	Electrical Load Distribution
24.50.01	05 DC Power Distribution
24.50.01	06 DC Power Distribution
24.50.01	07 DC Power Distribution
24.50.05	08 DC Power Distribution
24.50.05	11 DC Power Distribution
24.50.05	14 DC Power Distribution
24.50.05	15 DC Power Distribution
24.50.07	67 DC Power Distribution
24.53.00	AC Power Distribution
24.53.10	06 AC Power Distribution
24.53.10	08 AC Power Distribution
24.90.00	Earth/Ground Stations

Copyright ® Aircraft Technical Publishers

Section	Topic
24.90.01	05 Earth Chain
24.90.01	06 Earth Chain
26.00.00	Fire Protection
26.00.00	List of Effective Pages
26.10.00	Detection
26.10.10	03 Fire Detection
26.10.20	02 Rear Luggage Bay Smoke Detection
26.10.30	03 Rear Equipment Bay Overheat Detectors
26.20.00	Extinguishing
26.20.10	03 Fire Extinguishers
27.00.00	Flight Controls
27.00.00	List of Effective Pages
27.00.00	General
27.00.10	03 Control Surfaces Out of Trim
27.00.10	04 Control Surfaces Out of Trim
27.20.00	Rudder and Tab
27.24.00	Rudder Bias
27.24.10	02 Rudder Bias
27.24.10	03 Rudder Bias
27.30.00	Elevator and Tab
27.30.10	07 Elevator Electric Trim
27.30.10	08 Elevator Electric Trim
27.33.00	Stall Ident/Warning
27.33.00	05 Stall Ident System
27.33.00	07 Stall Ident System
27.50.00	Flaps
27.50.10	02 Flap Position Indicator
27.60.00	Spoiler, Drag Devices, and Variable Aerodynamic Fairings
27.61.00	Airbrake Indication/Selection
27.61.10	03 Air Brake Indicators
27.61.10	04 Air Brake Indicators
27.61.10	08 Air Brake Indicators
27.61.20	04 Air Brake Selector Lever Baulk
28.00.00	Fuel
28.00.00	List of Effective Pages
28.20.00	Distribution
28.21.00	Pumps
28.21.05	02 Fuel Pumps

Copyright ® Aircraft Technical Publishers

Section	Topic
28.21.05	03 Fuel Pumps
28.21.05	04 Fuel Pumps
28.40.00	Indicating
28.40.10	04 Fuel Contents Gauges
28.40.10	05 Fuel Contents Gauges
28.40.20	02 Fuel Pressure
28.40.30	05 Fuel Flowmeters
28.40.40	02 Fuel Filter Blocked and Overheat
28.41.00	Pressure Refueling
28.41.10	02 Pressure Refueling, Ventral Tank
28.41.10	03 Pressure Refueling, Ventral Tank
28.41.20	03 Pressure Refueling Control
28.41.30	02 Pressure Refueling, Wing Tanks
28.42.00	Fuel Transfer Warning
28.42.10	02 Transfer Fuel Cock Warning
29.00.00	Hydraulic Power
29.00.00	List of Effective Pages
29.30.00	Indicating
29.31.00	Emergency
29.31.10	02 Emergency Hydraulic Tank, Low Level Indicating
29.32.00	Pressure Indication
29.32.10	05 Hydraulic Systems Pressure Indicator
30.00.00	Ice and Rain Protection
30.00.00	List of Effective Pages
30.10.00	Airfoil
30.10.10	11 TKS Airframe Deicing
30.20.00	Air Intakes
30.20.10	02 Engine and Intake De-Ice
30.30.00	Pitot and Static
30.30.10	02 Static Plate Heaters
30.30.20	02 Stall Vane Sensor Heating
30.30.31	02 Pitot Head Heaters
30.40.00	Windows, Windscreen, and Doors
30.40.15	07 LH and RH a Windscreen De-Icing
30.40.15	10 LH and RH a Windscreen De-Icing
30.40.15	11 LH and RH a Windscreen De-Icing
30.40.15	12 LH and RH a Windscreen De-Icing
30.40.20	03 Windscreen B De-Icing LH and RH
30.40.20	05 Windscreen B De-Icing LH and RH

Copyright ® Aircraft Technical Publishers

Section	Topic
30.80.00	Detection
30.80.10	02 Ice Detection
30.80.10	03 Ice Detection
31.00.00	Indicating/Recording Systems
31.00.00	List of Effective Pages
31.20.00	Independent Instruments
31.20.35	02 Outside Air, Battery, Fuel Temperature
31.20.35	03 Outside Air, Battery, Fuel Temperature
31.20.60	02 R/C of Brake Pressure
31.50.00	Central Warning Systems
31.50.01	04 Master Warning System
31.50.01	07 Master Warning System
31.50.01	08 Master Warning System
31.50.01	09 Master Warning System
31.50.01	14 Master Warning System
31.50.05	03 Baggage Pannier
32.00.00	Landing Gear
32.00.00	List of Effective Pages
32.60.00	Position and Warning
32.60.10	04 Landing Gear Indication
32.60.20	02 Landing Gear Standby Indication
32.60.30	02 Landing Gear Lever Lock
32.60.30	03 Landing Gear Lever Lock
33.00.00	Lights
33.00.00	List of Effective Pages
33.10.00	Flight Compartment
33.10.05	05 Cockpit Lighting
33.10.05	07 Cockpit Lighting
33.10.05	08 Cockpit Lighting
33.10.05	09 Cockpit Lighting
33.10.05	11 Cockpit Lighting
33.10.10	31 Cockpit Lights
33.10.20	04 Supplies for Integral Lights
33.10.20	07 Supplies for Integral Lights
33.10.20	08 Supplies for Integral Lights
33.20.00	Cabin Standby
33.20.10	10 Standby Lights
33.30.00	Miscellaneous

Copyright ® Aircraft Technical Publishers

Section	Topic
33.30.05	07 Miscellaneous Lights
33.30.05	08 Miscellaneous Lights
33.30.15	07 Miscellaneous Lights - Tail
33.31.00	Rear Equipment Bay
33.31.10	04 Rear Equipment Bay Lighting
33.40.00	Exterior
33.40.10	05 Navigation, Beacon and Strobe Lights
33.40.10	06 Navigation, Beacon and Strobe Lights
33.40.15	02 Taxi Lights in Nose
33.40.20	04 Landing and Taxi Lights
33.40.30	03 Wing Inspection Spotlight
33.50.00	Emergency Lighting
33.50.10	09 Emergency Lights
34.00.00	Navigation
34.00.00	List of Effective Pages
34.10.00	Flight Environment Data
34.13.00	Mach/Air Speed Indicator (ASI)
34.13.01	04 Mach and Indicated Airspeed Warning
34.13.01	08 Mach and Indicated Airspeed Warning
34.30.00	Landing and Taxiing Aids
34.30.10	53 VHF Navigation System No. 1 (VIR-32)
34.30.20	53 VHF Navigation System No. 2 (VIR-32)
49.00.00	Airborne Auxiliary Power
49.00.00	List of Effective Pages
49.60.00	APU and Ground Generator
49.60.10	05 APU and Ground Generator
49.60.30	06 Auxiliary Power Unit
49.60.30	08 Auxiliary Power Unit
49.60.30	09 Auxiliary Power Unit
49.60.30	11 Auxiliary Power Unit
Structures	
52.00.00	Doors
52.00.00	List of Effective Pages
52.70.00	Door Warning
52.70.10	02 Pressure Door Unlocked Warning
Power Plant	

Copyright ® Aircraft Technical Publishers

Section	Topic
73.00.00	Engine Fuel and Control
73.00.00	List of Effective Pages
73.20.00	Controlling
73.20.01	05 No. 1 Fuel Computer (Digital)
73.20.02	05 No. 2 Fuel Computer
73.20.10	03 Engine Idle Speed Control
77.00.00	Engine Indicating
77.00.00	List of Effective Pages
77.10.00	Power
77.10.10	02 Engine RPM
77.20.00	Temperature
77.20.10	02 Inter Turbine Temperature Indicator
77.40.00	Chip Detectors
77.40.10	02 LH/RH Engine Chip Detector
78.00.00	Exhaust
78.00.00	List of Effective Pages
78.30.00	Thrust Reverser
78.30.05	01 Thrust Reverser
78.30.05	02 Thrust Reverser
79.00.00	Oil
79.00.00	List of Effective Pages
79.30.00	Indicating
79.30.10	02 Oil Pressure and Temperature
80.00.00	Starting
80.00.00	List of Effective Pages
80.10.00	Engine Start and Ignition
80.10.10	04 Engine Start and Ignition

*** End of Index ***

Copyright ® Aircraft Technical Publishers

MFG.

INTRO

Raytheon Aircraft Company

Hawker

Hawker 800
and
BAe 125 Series 800A & 800B

Airplane Serial Numbers:
258091 thru 258276, less 258266
(NOT APPLICABLE TO C29A, U125, U125A AIRPLANES)

Wiring Parts Catalog

Volume 1 of 3
Introduction thru Chapter 26

Copyright © Raytheon Aircraft Company 2003

P/N: WPC 125-800
Issued: 3rd Edition July 1995

Rev: 14
Dated: August 2003

Raytheon Aircraft Company

Hawker

Hawker 800
and
BAe 125 Series 800A & 800B

Airplane Serial Number:
258091 thru 258276, less 258266
(NOT APPLICABLE TO C29A, U125, U125A AIRPLANES)

Wiring Parts Catalog

Volume 2 of 3
Chapter 27 thru Chapter 31

Copyright © Raytheon Aircraft Company 2003

P/N: WPC 125-800
Issued: 3rd Edition July 1995

Rev: 14
Dated: August 2003

Raytheon Aircraft Company

Hawker

Hawker 800
and
BAe 125 Series 800A & 800B

Airplane Serial Number:
258091 thru 258276, less 258266
(NOT APPLICABLE TO C29A, U125, U125A AIRPLANES)

Wiring Parts Catalog

Volume 3 of 3
Chapter 32 thru Chapter 80

Copyright © Raytheon Aircraft Company 2003

P/N: WPC 125-800
Issued: 3rd Edition July 1995

Rev: 14
Dated: August 2003

Published by
RAYTHEON AIRCRAFT COMPANY
P.O. Box 85
Wichita, Kansas 67201
U.S.A.

The export of these commodoties, technology or software are subject to the US Export Administration Regulations. Diversion contrary to U.S. law is prohibited. For guidance on export control requirements, contact the Commerce Department's Bureau of Export Administration a 202-482-4811 or at www.bxa.doc.gov.

Raytheon
Aircraft Company

Member of GAMA
GAMA General Aviation Manufacturers Association

RECORD OF REVISIONS

MFG REV NO	DESCRIPTION	ISSUE DATE	ATP REV DATE	INSERTED BY
10	See Highlights	3/31/00	7/20/00	ATP/KS
11	See Highlights	11/15/00	4/26/01	ATP/MT
12	See Highlights	5/31/02	10/24/02	ATP/MB
13	See Highlights	11/30/02	3/27/03	ATP/MG
14	See Highlights	8/31/03	11/6/03	ATP/MT

RECORD OF REVISIONS

Complete this record upon entry of all revisions issued by:-
Raytheon Corporate Jets, Inc., St Albans Road West,Hatfield, Hertfordshire, England.

Rev. No.	Insertion Date	Inserted By

Rev. No.	Insertion Date	Inserted By

1 FEB · 95	JULY 95	F·G-F
2 July 95	Oct 95	JB.
3 MAR 96	APR 96	[illegible]
4 SEP 96	Oct 96	F·G-F.
5 May 97	Feb 98	JB
6 Nov 97	Feb 98	[illegible]
7 MAY 98	JULY 98	J.R.
8 Dec 98	Jan 99	JB
9 Jun 99	July 99	JB
10	Aug 00	JB
11	Jan 01	JB.
12 Mar 02	July 02	[illegible]
13 Nov. 02	Mar 03	ATP/MT
14 Aug. 03	NOV 03	ATP/MT
15		
16		
17		
18		
19		
20		

21		
22		
23		
24		
25		
26		
27		
28		
29		
30		
31		
32		
33		
34		
35		
36		
37		
38		
39		
40		

Printed in England

Rev. No.	Insertion Date	Inserted By

41		
42		
43		
44		
45		
46		
47		
48		
49		
50		
51		
52		
53		
54		
55		
56		
57		
58		
59		
60		

Rev. No.	Insertion Date	Inserted By

61		
62		
63		
64		
65		
66		
67		
68		
69		
70		
71		
72		
73		
74		
75		
76		
77		
78		
79		
80		

RECORD OF TEMPORARY REVISIONS

TEMP REV NO	DESCRIPTION	ISSUE DATE	ATP REV DATE	INSERT BY	DATE REMOVED	REV INCOR	REMOVE BY

800 Wiring Parts Catalog

Raytheon Aircraft Company
PO Box 85
Wichita
Kansas 67201-0085
USA

Manual Reference - WPC 125-800

LETTER OF TRANSMITTAL - REVISION 14

1. HOLDERS OF PRINTED MANUAL

(1) Check that Revision 13 has been incorporated.

(2) Insert the revision pages in numerical sequence, adding, replacing and removing pages as instructed in this Letter of Transmittal.

(3) Record the incorporation of this revision on the RECORD OF REVISIONS sheet at the front of Volume 1.

(4) Retain this Letter of Transmittal and file at the front of the manual.

MOD STATEMENT	1	CHANGED
W D LISTING	1	CHANGED
W D LISTING	2	CHANGED
W D LISTING	3	CHANGED
W D LISTING	4	CHANGED
W D LISTING	5	CHANGED
W D LISITNG	6	CHANGED
W D LIATING	7	CHANGED
W D LISTING	8	CHANGED
W D LISTING	9	CHANGED
W D LISTING	10	CHANGED
W D LISTING	11	CHANGED
W D LISTING	12	CHANGED
VENDORS	1	CHANGED
VENDORS	2	CHANGED
VENDORS	3	CHANGED
VENDORS	4	CHANGED
VENDORS	5	CHANGED
VENDORS	6	CHANGED
VENDORS	7	CHANGED
	THRU	
VENDORS	20	CHANGED
ALPHA-NUM	1	CHANGED
ALPHA-NUM	2	CHANGED
ALPHA-NUM	3	CHANGED
ALPHA-NUM	4	CHANGED
ALPHA-NUM	5	CHANGED
	THRU	
ALPHA-NUM	104	CHANGED
NUM-NUM	1	CHANGED
NUM-NUM	2	CHANGED
NUM-NUM	3	CHANGED
NUM-NUM	4	CHANGED
NUM-NUM	5	CHANGED
	THRU	
NUM-NUM	48	CHANGED
ELEC ID INDEX	1	CHANGED
	THRU	
ELEC ID INDEX	165	CHANGED
ELEC ID INDEX	166	ADDED
21 EFF PG	1	CHANGED
21	1	CHANGED
21	2	CHANGED
21	3	CHANGED
21-31-10-07	5	CHANGED
22 EFF PG	1	CHANGED
22	1	CHANGED
23 EFF PG	1	CHANGED
23	1	CHANGED
24 EFF PG	1	CHANGED
24 EFF PG	2	CHANGED
24 EFF PG	3	CHANGED
24	1	CHANGED
24	2	CHANGED
24	3	CHANGED
24	4	CHANGED
24	5	CHANGED
24	6	CHANGED
24	7	CHANGED
24-30-10-02	4	CHANGED
24-30-20-02	11	CHANGED
24-30-20-03	11	CHANGED
26 EFF PG	1	CHANGED
26	1	CHANGED
26	2	CHANGED
26-10-10-03	1	CHANGED
26-10-10-03	2	CHANGED
26-10-10-03	3	CHANGED
26-10-10-03	4	CHANGED
26-10-10-03	5	CHANGED
27 EFF PG	1	CHANGED
27	1	CHANGED
27	2	CHANGED
27	3	CHANGED
27	4	CHANGED
27	5	CHANGED
27-00-10-04	2	CHANGED
27-00-10-04	3	ADDED
27-33-00-07	11	CHANGED
27-33-00-07	12	CHANGED
27-33-00-07	13	CHANGED
27-33-00-07	14	CHANGED
27-33-00-07	15	CHANGED
27-33-00-07	16	CHANGED
27-33-00-07	17	ADDED
28 EFF PG	1	CHANGED
28	1	CHANGED
28	2	CHANGED
28	3	CHANGED
29 EFF PG	1	CHANGED
29	1	CHANGED
30 EFF PG	1	CHANGED
30 EFF PG	2	CHANGED
30	1	CHANGED
30	2	CHANGED
30	3	CHANGED
30	4	CHANGED
30	5	CHANGED
30-40-15-07	6	CHANGED
30-40-15-07	7	CHANGED
30-40-15-10	5	CHANGED
30-40-15-10	6	CHANGED

30-40-15-11	7	CHANGED
30-40-15-11	8	CHANGED
30-40-15-12	7	CHANGED
30-40-15-12	8	CHANGED
30-40-20-03	4	CHANGED
30-40-20-03	5	CHANGED
30-40-20-05	5	CHANGED
30-40-20-05	6	CHANGED
31 EFF PG	1	CHANGED
31	1	CHANGED
31	2	CHANGED
32 EFF PG	1	CHANGED
32	1	CHANGED
32-60-10-04	8	CHANGED
32-60-10-04	9	CHANGED
33 EFF PG	1	CHANGED
33 EFF PG	2	CHANGED
33	1	CHANGED
33	2	CHANGED
33	3	CHANGED
33	4	CHANGED
33	5	CHANGED
33	6	CHANGED
33	7	CHANGED
33-30-05-08	1	CHANGED
33-30-05-08	2	CHANGED
34 EFF PG	1	CHANGED
34	1	CHANGED
34	2	CHANGED
34	3	DELETED
34	4	DELETED
34-52-00	1	DELETED
34-52-61-01A	0	DELETED
34-52-61-01A	0A	DELETED
34-52-61-01A	0B	DELETED
34-52-61-01A	1	DELETED
34-52-71-01A	0	DELETED
34-52-71-01A	0A	DELETED
34-52-71-01A	1	DELETED
34-60-00	1	DELETED
34-60-41-01A	0	DELETED
34-60-41-01A	0A	DELETED
34-60-41-01A	1	DELETED
34-61-00	1	DELETED
34-61-41-01A	0	DELETED
34-61-41-01A	0A	DELETED
34-61-41-01A	1	DELETED
43 EFF PG	1	DELETED
43	1	DELETED
43-30-00	1	DELETED
43-30-21-01A	0	DELETED
43-30-21-01A	0A	DELETED
43-30-21-01A	0B	DELETED
43-30-21-01A	0C	DELETED
43-30-21-01A	0D	DELETED
43-30-21-01A	0E	DELETED
43-30-21-01A	0F	DELETED
43-30-21-01A	1	DELETED
49 EFF PG	1	CHANGED
49	1	CHANGED
49-60-10-05	3	CHANGED
49-60-10-05	4	CHANGED
49-60-10-05	5	CHANGED
49-60-10-05	6	ADDED
52 EFF PG	1	CHANGED
52	1	CHANGED
73 EFF PG	1	CHANGED
73	1	CHANGED
77 EFF PG	1	CHANGED
77	1	CHANGED
77	2	CHANGED
77	3	CHANGED
78 EFF PG	1	CHANGED
78	1	CHANGED
79 EFF PG	1	CHANGED
79	1	CHANGED
80 EFF PG	1	CHANGED
80	1	CHANGED

800 Wiring Parts Catalog

Raytheon Aircraft Company
PO Box 85
Wichita
Kansas 67201-0085
USA

Manual Reference - WPC 125-800

LETTER OF TRANSMITTAL - REVISION 13

1. INSTRUCTIONS TO INCORPORATE THIS REVISION

(1) Check that Revision 12 has been incorporated.

(2) Insert the revision pages in numerical sequence, removing and destroying the existing pages replaced by revised pages.

(3) Record the incorporation of this revision on the RECORD OF REVISIONS sheet at the front of Volume 1.

(4) Retain this Letter of Transmittal and file at the front of the manual.

MOD STATEMENT	1	CHANGED
W D LISTING	1	CHANGED
	THRU	
W D LISTING	11	CHANGED
W D LISTING	12	CHANGED
VENDORS	1	CHANGED
	THRU	
VENDORS	20	CHANGED
ALPHA-NUM	1	CHANGED
	THRU	
ALPHA-NUM	104	CHANGED
NUM-NUM	1	CHANGED
	THRU	
NUM-NUM	48	CHANGED
ELEC ID INDEX	1	CHANGED
ELEC ID INDEX	2	CHANGED
ELEC ID INDEX	3	CHANGED
ELEC ID INDEX	4	CHANGED
ELEC ID INDEX	5	CHANGED
ELEC ID INDEX	6	CHANGED
ELEC ID INDEX	7	CHANGED
ELEC ID INDEX	8	CHANGED
ELEC ID INDEX	9	CHANGED
ELEC ID INDEX	10	CHANGED
ELEC ID INDEX	11	CHANGED
ELEC ID INDEX	12	CHANGED
ELEC ID INDEX	13	CHANGED
ELEC ID INDEX	14	CHANGED
ELEC ID INDEX	15	CHANGED
ELEC ID INDEX	16	CHANGED
ELEC ID INDEX	17	CHANGED
ELEC ID INDEX	18	CHANGED
ELEC ID INDEX	19	CHANGED
ELEC ID INDEX	20	CHANGED
ELEC ID INDEX	21	CHANGED
ELEC ID INDEX	22	CHANGED
	THRU	
ELEC ID INDEX	164	CHANGED
ELEC ID INDEX	165	CHANGED
21 EFF PG	1	CHANGED
21	1	CHANGED
21	2	CHANGED
21	3	CHANGED
21-20-10-03	0	CHANGED
21-30-10-02	0	CHANGED
21-30-10-04	0	CHANGED
21-31-10-07	0	CHANGED
21-31-10-07	1	CHANGED
21-60-10-08	0	CHANGED
21-60-10-10	0	CHANGED
21-60-10-10	0B	CHANGED
21-60-10-11	0	CHANGED
21-60-10-11	0A	CHANGED
21-60-10-11	0B	CHANGED
21-60-10-11	0C	CHANGED
21-60-20-02	0	CHANGED
21-60-20-03	0	CHANGED
22 EFF PG	1	CHANGED
22	1	CHANGED
23 EFF PG	1	CHANGED
23	1	CHANGED
23-31-20-52	0	CHANGED
24 EFF PG	1	CHANGED
24 EFF PG	2	CHANGED
24 EFF PG	3	CHANGED
24	1	CHANGED
24	2	CHANGED
24	3	CHANGED
24	4	CHANGED
24	5	CHANGED
24	6	CHANGED
24	7	CHANGED
24-21-17-03	0	CHANGED
24-21-17-03	0A	CHANGED
24-21-17-04	0	CHANGED
24-21-17-04	0A	CHANGED
24-30-10-02	0	CHANGED
24-30-10-02	0A	CHANGED
24-30-20-02	0	CHANGED
24-30-20-02	0A	CHANGED
24-30-20-03	0	CHANGED
24-30-20-03	0A	CHANGED
24-50-01-05	0A	CHANGED
24-50-01-05	0B	CHANGED
24-50-01-06	0	CHANGED
24-50-01-06	0B	CHANGED
24-50-01-07	0	CHANGED
24-50-01-07	0A	CHANGED
24-50-05-08	0	CHANGED
24-50-05-08	0A	CHANGED
24-50-05-08	0C	CHANGED
24-50-05-11	0	CHANGED
24-50-05-11	0A	CHANGED
24-50-05-11	0B	CHANGED
24-50-05-11	0C	CHANGED
24-50-05-14	0	CHANGED
24-50-05-14	0A	CHANGED
24-50-05-15	0	CHANGED
24-50-05-15	0A	CHANGED
24-50-05-15	0B	CHANGED
26 EFF PG	1	CHANGED

26	1	CHANGED
26	2	CHANGED
26-10-10-03	0	CHANGED
27 EFF PG	1	CHANGED
27	1	CHANGED
27	2	CHANGED
27	3	CHANGED
27	4	CHANGED
27	5	CHANGED
27-00-10-04	0	CHANGED
27-33-00-07	0	CHANGED
27-33-00-07	0A	CHANGED
27-33-00-07	0B	CHANGED
27-33-00-07	0C	CHANGED
27-33-00-07	0D	CHANGED
27-33-00-07	0E	CHANGED
27-33-00-07	0F	CHANGED
27-33-00-07	0G	CHANGED
27-33-00-07	0H	CHANGED
27-33-00-07	1	CHANGED
27-50-10-02	0	CHANGED
27-61-10-03	0	CHANGED
27-61-10-04	0	CHANGED
27-61-10-08	1	CHANGED
28 EFF PG	1	CHANGED
28	1	CHANGED
28	2	CHANGED
28	3	CHANGED
28-40-10-04	0	CHANGED
28-40-10-04	0A	CHANGED
28-40-10-04	1	CHANGED
28-40-20-02	0	CHANGED
28-40-30-05	1	CHANGED
28-41-10-02	1	CHANGED
28-41-10-02	2	CHANGED
28-41-10-02	3	CHANGED
28-41-10-02	4	CHANGED
28-41-10-02	5	CHANGED
28-41-10-03	0	CHANGED
28-41-10-03	0A	CHANGED
29 EFF PG	1	CHANGED
29	1	CHANGED
30 EFF PG	1	CHANGED
30 EFF PG	2	CHANGED
30	1	CHANGED
30	2	CHANGED
30	3	CHANGED
30	4	CHANGED
30	5	CHANGED
30-10-10-11	1	CHANGED
30-20-10-02	0	CHANGED
30-40-15-10	0	CHANGED
30-40-15-10	0A	CHANGED
30-40-15-10	0B	CHANGED
30-40-15-11	0	CHANGED
30-40-15-12	0B	CHANGED
30-40-20-03	0	CHANGED
30-40-20-05	0	CHANGED
31 EFF PG	1	CHANGED
31	1	CHANGED
31	2	CHANGED
31-20-35-02	0	CHANGED
31-20-60-02	0	CHANGED
31-20-60-02	1	CHANGED
31-50-01-08	0	CHANGED
31-50-01-14	0	CHANGED
31-50-01-14	0A	CHANGED
32 EFF PG	1	CHANGED
32	1	CHANGED
32-60-10-04	0	CHANGED
32-60-10-04	1	CHANGED
32-60-10-04	2	CHANGED
32-60-20-02	0	CHANGED
32-60-30-02	0	CHANGED
32-60-30-03	0	CHANGED
33 EFF PG	1	CHANGED
33 EFF PG	2	CHANGED
33	1	CHANGED
33	2	CHANGED
33	3	CHANGED
33	4	CHANGED
33	5	CHANGED
33	6	CHANGED
33	7	CHANGED
33-10-05-05	0	CHANGED
33-10-05-07	0	CHANGED
33-10-05-08	0	CHANGED
33-10-05-09	0	CHANGED
33-10-05-11	0	CHANGED
33-10-05-11	0B	CHANGED
33-10-20-08	0	CHANGED
33-10-20-08	0A	CHANGED
33-30-05-08	0	CHANGED
33-30-05-08	1	CHANGED
33-30-05-08	2	CHANGED
34 EFF PG	1	CHANGED
34	1	CHANGED
34	2	CHANGED
34	3	CHANGED
34	4	CHANGED
34	5	DELETED
34-13-01-04	1	CHANGED

34-30-20-53	0	CHANGED
34-30-20-53	0A	CHANGED
34-40-00	1	DELETED
34-40-11-01B	0	DELETED
34-40-11-01B	1	DELETED
34-52-41-01	0	DELETED
34-52-41-01	0A	DELETED
34-52-41-01	0B	DELETED
34-52-41-01	0C	DELETED
34-52-41-01	1	DELETED
34-52-41-01A	0	DELETED
34-52-41-01A	0A	DELETED
34-52-41-01A	1	DELETED
34-52-51-01	0	DELETED
34-52-51-01	1	DELETED
34-52-51-01A	0	DELETED
34-52-51-01A	0A	DELETED
34-52-51-01A	1	DELETED
34-52-61-01A	0-0B	DELETED
34-52-61-01A	1	DELETED
34-52-71-01A	0-0A	DELETED
34-52-71-01A	1	DELETED
34-60-41-01A	0-0A	DELETED
34-60-41-01A	1	DELETED
34-61-41-01A	0-0A	DELETED
34-61-41-01A	1	DELETED
43 EFF PG	1	DELETED
43	1	DELETED
43-30-21-01A	0-0F	DELETED
43-30-21-01A	1	DELETED
49 EFF PG	1	CHANGED
49	1	CHANGED
49-60-10-05	3	CHANGED
49-60-10-05	4	CHANGED
49-60-30-11	0A	CHANGED
52 EFF PG	1	CHANGED
52	1	CHANGED
73 EFF PG	1	CHANGED
73	1	CHANGED
73-20-01-05	0	CHANGED
73-20-01-05	0A	CHANGED
73-20-02-05	0	CHANGED
73-20-02-05	0A	CHANGED
73-20-02-05	0B	CHANGED
73-20-10-03	0	CHANGED
77 EFF PG	1	CHANGED
77	1	CHANGED
77	2	CHANGED
77	3	CHANGED
77-10-10-02	0A	CHANGED
77-20-10-02	0	CHANGED
77-40-10-02	0	CHANGED
78 EFF PG	1	CHANGED
78	1	CHANGED
78-30-05-02	0A	CHANGED
79 EFF PG	1	CHANGED
79	1	CHANGED
79-30-10-02	0A	CHANGED
79-30-10-02	1	CHANGED
80 EFF PG	1	CHANGED
80	1	CHANGED
80-10-10-04	0	CHANGED
80-10-10-04	0A	CHANGED

800 Wiring Parts Catalog

Raytheon Aircraft Company
PO Box 85
Wichita
Kansas 67201-0085
USA

Manual Reference - WPC - 800

LETTER OF TRANSMITTAL - REVISION 12

NOTE: This revision consists of a reissue of the Title pages,Table of Contents, Introduction thru chapter 80.

1. INSTRUCTIONS TO INCORPORATE THIS REVISION

(1) Retain the existing RECORD OF REVISIONS sheet and the existing LETTERS OF TRANSMITTAL in the front of Volume 1. Retain all existing divider tabs in Volume 1 thru 3.

(2) Remove and destroy all other pages of the WPC.

(3) Insert the reissued Title pages, Table of Contents, Introduction thru chapter 80.

(4) Record the incorporation of this revision on the RECORD OF REVISION sheet at the front of Volume 1.

(5) Retain this Letter of Transmittal and file at the front of the manual.

Raytheon Aircraft Company
9709 E Central
Wichita, KS 27201 - 00855

Manual Reference: WPC - 125 - 800

LETTER OF TRANSMITTAL - REVISION 11

INSTRUCTION TO INCORPORATING THIS REVISION

1. Check package labels to confirm receipt of correct revision copy.
2. Ensure that revision No. 10 has been incorporated.
3. This revision transmittal consists of pages 1 to. 3
4, Retain this letter of transmittal and file at the front of the manual.
5, When this revision has been incorporated, please sign the Record of Revision Card and enter the date.

MOD STATEMENT	1	CHANGED
W D LISTING	1	CHANGED
W D LISTING	2	CHANGED
W D LISTING	3	CHANGED
W D LISTING	4	CHANGED
W D LISTING	5	CHANGED
W D LISTING	6	CHANGED
W D LISTING	7	CHANGED
W D LISTING	8	CHANGED
W D LISTING	9	CHANGED
W D LISTING	10	CHANGED
W D LISTING	11	CHANGED
W D LISTING	12	CHANGED
VENDORS	1	CHANGED
	THRU	
VENDORS	16	CHANGED
VENDORS	17	ADDED
VENDORS	18	ADDED
VENDORS	19	ADDED
ALPHA-NUM	1	CHANGED
	THRU	
ALPHA-NUM	101	CHANGED
ALPHA-NUM	102	ADDED
ALPHA-NUM	103	ADDED
NUM-NUM	1	CHANGED
	THRU	
NUM-NUM	47	CHANGED
NUM-NUM	48	DELETED
ELEC ID INDEX	1	CHANGED
ELEC ID INDEX	2	CHANGED
ELEC ID INDEX	3	CHANGED
ELEC ID INDEX	4	CHANGED
ELEC ID INDEX	5	CHANGED
ELEC ID INDEX	6	CHANGED
ELEC ID INDEX	7	CHANGED
ELEC ID INDEX	8	CHANGED
	THRU	
ELEC ID INDEX	161	CHANGED
ELEC ID INDEX	162	ADDED
ELEC ID INDEX	163	ADDED
21 EFF PG	1	CHANGED
21	1	CHANGED
21	2	CHANGED
21	3	CHANGED
22 EFF PG	1	CHANGED
22	1	CHANGED
23 EFF PG	1	CHANGED
23	1	CHANGED
24 EFF PG	1	CHANGED
24 EFF PG	2	CHANGED
24 EFF PG	3	CHANGED
24	1	CHANGED
24	2	CHANGED
24	3	CHANGED
24	4	CHANGED
24	5	CHANGED
24	6	CHANGED
24	7	CHANGED
26 EFF PG	1	CHANGED
26	1	CHANGED
26	2	CHANGED
27 EFF PG	1	CHANGED
27	1	CHANGED
27	2	CHANGED
27	3	CHANGED
27	4	CHANGED
27	5	CHANGED
27-61-10-08	1	CHANGED
28 EFF PG	1	CHANGED
28	1	CHANGED
28	2	CHANGED
28	3	CHANGED
29 EFF PG	1	CHANGED
29	1	CHANGED
30 EFF PG	1	CHANGED
30 EFF PG	2	CHANGED
30	1	CHANGED
30	2	CHANGED
30	3	CHANGED
30	4	CHANGED
30	5	CHANGED
31 EFF PG	1	CHANGED
31 EFF PG	2	CHANGED
31	1	CHANGED
31	2	CHANGED
32 EFF PG	1	CHANGED
32	1	CHANGED
33 EFF PG	1	CHANGED
33 EFF PG	2	CHANGED
33	1	CHANGED
33	2	CHANGED
33	3	CHANGED
33	4	CHANGED
33	5	CHANGED
33	6	CHANGED
33	7	CHANGED
34 EFF PG	1	CHANGED
34	1	CHANGED
34	2	CHANGED

52 EFF PG	1	CHANGED
52	1	CHANGED
73 EFF PG	1	CHANGED
73	1	CHANGED
73-20-02-05	4	CHANGED
77 EFF PG	1	CHANGED
77	1	CHANGED
77	2	CHANGED
77	3	CHANGED
78 EFF PG	1	CHANGED
78	1	CHANGED
79 EFF PG	1	CHANGED
79	1	CHANGED
80 EFF PG	1	CHANGED
80	1	CHANGED

Raytheon Aircraft Company
9709 E Central
Wichita, KS 27201 - 00855

Manual Reference: WPC - 125 - 800

LETTER OF TRANSMITTAL - REVISION 10

INSTRUCTION TO INCORPORATING THIS REVISION

1. Check package labels to confirm receipt of correct revision copy.
2. Ensure that revision No. 09 has been incorporated.
3. This revision transmittal consists of pages 1 to. 8
4, Retain this letter of transmittal and file at the front of the manual.
5, When this revision has been incorporated, please sign the Record of Revision Card and enter the date.

MOD STATEMENT	1	CHANGED
W D LISTING	1	CHANGED
W D LISTING	2	CHANGED
W D LISTING	3	CHANGED
	THRU	
W D LISTING	12	CHANGED
VENDORS	1	CHANGED
VENDORS	2	CHANGED
VENDORS	3	CHANGED
VENDORS	4	CHANGED
	THRU	
VENDORS	16	CHANGED
ALPHA-NUM	1	CHANGED
	THRU	
ALPHA-NUM	101	CHANGED
ALPHA-NUM	102	ADDED
ALPHA-NUM	103	ADDED
NUM-NUM	1	CHANGED
	THRU	
NUM-NUM	47	CHANGED
NUM-NUM	48	DELETED
ELEC ID INDEX	1	CHANGED
ELEC ID INDEX	2	CHANGED
ELEC ID INDEX	3	CHANGED
ELEC ID INDEX	4	CHANGED
ELEC ID INDEX	5	CHANGED
ELEC ID INDEX	6	CHANGED
ELEC ID INDEX	7	CHANGED
ELEC ID INDEX	8	CHANGED
ELEC ID INDEX	9	CHANGED
ELEC ID INDEX	10	CHANGED
ELEC ID INDEX	11	CHANGED
ELEC ID INDEX	12	CHANGED
ELEC ID INDEX	13	CHANGED
ELEC ID INDEX	14	CHANGED
ELEC ID INDEX	15	CHANGED
ELEC ID INDEX	16	CHANGED
	THRU	
ELEC ID INDEX	162	CHANGED
ELEC ID INDEX	163	ADDED
21 EFF PG	1	CHANGED
21	1	CHANGED
21	2	CHANGED
21	3	CHANGED
21-30-10-04	2	CHANGED
21-60-10-08	1	CHANGED
21-60-10-08	2	CHANGED
21-60-10-08	3	CHANGED
21-60-10-08	4	CHANGED
21-60-10-08	5	CHANGED
21-60-10-08	6	CHANGED
21-60-10-08	7	CHANGED
21-60-10-08	8	DELETED
21-60-10-10	1	CHANGED
21-60-10-10	2	CHANGED
21-60-10-10	3	CHANGED
21-60-10-10	4	CHANGED
21-60-10-10	5	CHANGED
21-60-10-10	6	CHANGED
21-60-10-10	7	CHANGED
21-60-10-10	8	CHANGED
21-60-10-10	9	ADDED
21-60-10-11	1	CHANGED
21-60-10-11	2	CHANGED
21-60-10-11	3	CHANGED
21-60-10-11	4	CHANGED
21-60-10-11	5	CHANGED
21-60-10-11	6	CHANGED
21-60-10-11	7	CHANGED
21-60-10-11	8	CHANGED
21-60-10-11	9	CHANGED
21-60-10-11	10	CHANGED
21-60-10-11	11	CHANGED
21-60-10-11	12	CHANGED
21-60-10-11	13	CHANGED
21-60-10-11	14	CHANGED
21-60-10-11	15	CHANGED
21-60-10-11	16	CHANGED
21-60-10-11	17	CHANGED
21-60-10-11	18	CHANGED
21-60-10-11	19	CHANGED
21-60-10-11	20	CHANGED
21-60-10-11	21	CHANGED
21-60-10-11	22	CHANGED
21-60-10-11	23	CHANGED
21-60-10-11	24	CHANGED
21-60-10-11	25	DELETED
21-60-10-11	26	DELETED
21-60-10-11	27	DELETED
21-60-10-11	28	DELETED
21-60-10-11	29	DELETED
21-60-10-11	30	DELETED
21-60-10-11	31	DELETED
21-60-10-11	32	DELETED
21-60-10-11	33	DELETED
22 EFF PG	1	CHANGED
22	1	CHANGED
23 EFF PG	1	CHANGED
23	1	CHANGED
24 EFF PG	1	CHANGED
24 EFF PG	2	CHANGED
24 EFF PG	3	CHANGED

24	1	CHANGED
24	2	CHANGED
24	3	CHANGED
24	4	CHANGED
24	5	CHANGED
24	6	CHANGED
24	7	CHANGED
24-21-17-03	1	CHANGED
24-21-17-03	2	CHANGED
24-21-17-03	3	CHANGED
24-21-17-03	4	CHANGED
24-21-17-03	5	CHANGED
24-21-17-03	6	CHANGED
24-21-17-04	1	CHANGED
24-21-17-04	2	CHANGED
24-21-17-04	3	CHANGED
24-21-17-04	4	CHANGED
24-21-17-04	5	CHANGED
24-21-17-04	6	CHANGED
24-30-10-02	1	CHANGED
24-30-10-02	2	CHANGED
24-30-10-02	3	CHANGED
24-30-10-02	4	CHANGED
24-30-20-02	1	CHANGED
24-30-20-02	2	CHANGED
24-30-20-02	3	CHANGED
24-30-20-02	4	CHANGED
24-30-20-02	5	CHANGED
24-30-20-02	6	CHANGED
24-30-20-02	7	CHANGED
24-30-20-02	8	CHANGED
24-30-20-02	9	CHANGED
24-30-20-02	10	CHANGED
24-30-20-02	11	CHANGED
24-30-20-02	12	DELETED
24-30-20-02	13	DELETED
24-30-20-02	14	DELETED
24-30-20-02	15	DELETED
24-30-20-02	16	DELETED
24-30-20-02	17	DELETED
24-30-20-02	18	DELETED
24-30-20-02	19	DELETED
24-30-20-03	1	CHANGED
24-30-20-03	2	CHANGED
24-30-20-03	3	CHANGED
24-30-20-03	4	CHANGED
24-30-20-03	5	CHANGED
24-30-20-03	6	CHANGED
24-30-20-03	7	CHANGED
24-30-20-03	8	CHANGED
24-30-20-03	9	CHANGED
24-30-20-03	10	CHANGED
24-30-20-03	11	CHANGED
24-30-20-03	12	DELETED
24-30-20-03	13	DELETED
24-30-20-03	14	DELETED
24-30-20-03	15	DELETED
24-30-20-03	16	DELETED
24-30-20-03	17	DELETED
24-30-20-03	18	DELETED
24-30-20-03	19	DELETED
24-50-01-05	1	CHANGED
24-50-01-05	2	CHANGED
24-50-01-05	3	CHANGED
24-50-01-05	4	CHANGED
24-50-01-05	5	CHANGED
24-50-01-05	6	CHANGED
24-50-01-05	7	CHANGED
24-50-01-05	8	CHANGED
24-50-01-06	1	CHANGED
24-50-01-06	2	CHANGED
24-50-01-06	3	CHANGED
24-50-01-06	4	CHANGED
24-50-01-06	5	CHANGED
24-50-01-06	6	CHANGED
24-50-01-06	7	CHANGED
24-50-01-06	8	CHANGED
24-50-01-06	9	CHANGED
24-50-01-06	10	CHANGED
24-50-01-06	11	CHANGED
24-50-01-06	12	CHANGED
24-50-01-06	13	CHANGED
24-50-01-06	14	CHANGED
24-50-01-06	15	CHANGED
24-50-01-06	16	CHANGED
24-50-01-06	17	CHANGED
24-50-01-06	18	CHANGED
24-50-01-06	19	CHANGED
24-50-01-06	20	CHANGED
24-50-01-06	21	CHANGED
24-50-01-06	22	CHANGED
24-50-01-06	23	CHANGED
24-50-01-06	24	CHANGED
24-50-01-06	25	CHANGED
24-50-01-06	26	CHANGED
24-50-01-06	27	CHANGED
24-50-01-06	28	CHANGED
24-50-01-06	29	CHANGED
24-50-01-06	30	CHANGED
24-50-01-06	31	CHANGED
24-50-01-06	32	CHANGED
24-50-01-06	33	DELETED

24-50-01-06	34 DELETED	24-50-01-07	34 DELETED
24-50-01-06	35 DELETED	24-50-01-07	35 DELETED
24-50-01-06	36 DELETED	24-50-01-07	36 DELETED
24-50-01-06	37 DELETED	24-50-01-07	37 DELETED
24-50-01-06	38 DELETED	24-50-01-07	38 DELETED
24-50-01-06	39 DELETED	24-50-01-07	39 DELETED
24-50-01-06	40 DELETED	24-50-01-07	40 DELETED
24-50-01-06	41 DELETED	24-50-01-07	41 DELETED
24-50-01-06	42 DELETED	24-50-01-07	42 DELETED
24-50-01-06	43 DELETED	24-50-01-07	43 DELETED
24-50-01-06	44 DELETED	24-50-01-07	44 DELETED
24-50-01-06	45 DELETED	24-50-01-07	45 DELETED
24-50-01-06	46 DELETED	24-50-01-07	46 DELETED
24-50-01-06	47 DELETED	24-50-01-07	47 DELETED
24-50-01-06	48 DELETED	24-50-01-07	48 DELETED
24-50-01-06	49 DELETED	24-50-01-07	49 DELETED
24-50-01-06	50 DELETED	24-50-01-07	50 DELETED
24-50-01-06	51 DELETED	24-50-01-07	51 DELETED
24-50-01-07	1 CHANGED	24-50-01-07	52 DELETED
24-50-01-07	2 CHANGED	26 EFF PG	1 CHANGED
24-50-01-07	3 CHANGED	26	1 CHANGED
24-50-01-07	4 CHANGED	26	2 CHANGED
24-50-01-07	5 CHANGED	26-10-10-03	1 CHANGED
24-50-01-07	6 CHANGED	27 EFF PG	1 CHANGED
24-50-01-07	7 CHANGED	27	1 CHANGED
24-50-01-07	8 CHANGED	27	2 CHANGED
24-50-01-07	9 CHANGED	27	3 CHANGED
24-50-01-07	10 CHANGED	27	4 CHANGED
24-50-01-07	11 CHANGED	27	5 CHANGED
24-50-01-07	12 CHANGED	27-00-10-03	1 CHANGED
24-50-01-07	13 CHANGED	27-00-10-03	2 CHANGED
24-50-01-07	14 CHANGED	27-00-10-04	1 CHANGED
24-50-01-07	15 CHANGED	27-00-10-04	2 CHANGED
24-50-01-07	16 CHANGED	27-33-00-05	6 CHANGED
24-50-01-07	17 CHANGED	27-33-00-05	7 CHANGED
24-50-01-07	18 CHANGED	27-33-00-05	8 CHANGED
24-50-01-07	19 CHANGED	27-33-00-05	9 CHANGED
24-50-01-07	20 CHANGED	27-33-00-05	10 CHANGED
24-50-01-07	21 CHANGED	27-33-00-05	11 CHANGED
24-50-01-07	22 CHANGED	27-33-00-05	12 CHANGED
24-50-01-07	23 CHANGED	27-33-00-07	1 CHANGED
24-50-01-07	24 CHANGED	27-33-00-07	2 CHANGED
24-50-01-07	25 CHANGED	27-33-00-07	3 CHANGED
24-50-01-07	26 CHANGED	27-33-00-07	4 CHANGED
24-50-01-07	27 CHANGED	27-33-00-07	5 CHANGED
24-50-01-07	28 CHANGED	27-33-00-07	6 CHANGED
24-50-01-07	29 CHANGED	27-33-00-07	7 CHANGED
24-50-01-07	30 CHANGED	27-33-00-07	8 CHANGED
24-50-01-07	31 CHANGED	27-33-00-07	9 CHANGED
24-50-01-07	32 CHANGED	27-33-00-07	10 CHANGED
24-50-01-07	33 DELETED	27-33-00-07	11 CHANGED

27-33-00-07	12	CHANGED
27-33-00-07	13	ADDED
27-33-00-07	14	ADDED
27-33-00-07	15	ADDED
27-33-00-07	16	ADDED
27-61-10-03	1	CHANGED
27-61-10-03	2	CHANGED
27-61-10-04	1	CHANGED
27-61-10-04	2	CHANGED
27-61-10-04	3	CHANGED
27-61-10-04	4	CHANGED
27-61-10-04	5	DELETED
27-61-10-04	6	DELETED
27-61-10-08	1	CHANGED
27-61-10-08	2	CHANGED
27-61-10-08	3	ADDED
27-61-20-04	2	CHANGED
28 EFF PG	1	CHANGED
28	1	CHANGED
28	2	CHANGED
28	3	CHANGED
28-21-05-04	5	CHANGED
28-40-10-05	1	CHANGED
28-40-10-05	2	CHANGED
28-40-10-05	3	CHANGED
28-40-10-05	4	DELETED
28-41-10-02	1	CHANGED
28-41-10-02	2	CHANGED
28-41-10-02	3	CHANGED
28-41-10-02	4	CHANGED
28-41-10-02	5	CHANGED
28-41-10-03	1	CHANGED
28-41-10-03	3	CHANGED
28-41-20-03	2	CHANGED
28-41-20-03	3	CHANGED
28-41-20-03	4	CHANGED
28-41-20-03	5	CHANGED
28-41-30-02	1	CHANGED
28-41-30-02	2	CHANGED
29 EFF PG	1	CHANGED
29	1	CHANGED
30 EFF PG	1	CHANGED
30 EFF PG	2	CHANGED
30	1	CHANGED
30	2	CHANGED
30	3	CHANGED
30	4	CHANGED
30	5	CHANGED
30-20-10-02	1	CHANGED
30-20-10-02	2	CHANGED
30-20-10-02	3	CHANGED
30-20-10-02	4	CHANGED
30-20-10-02	5	CHANGED
30-20-10-02	6	CHANGED
30-20-10-02	7	CHANGED
30-20-10-02	8	DELETED
30-30-10-02	1	CHANGED
30-30-10-02	2	CHANGED
30-30-20-02	1	CHANGED
30-30-20-02	2	CHANGED
30-30-20-02	6	CHANGED
30-30-20-02	7	CHANGED
30-40-15-07	1	CHANGED
30-40-15-07	2	CHANGED
30-40-15-07	3	CHANGED
30-40-15-07	4	CHANGED
30-40-15-07	5	CHANGED
30-40-15-07	6	CHANGED
30-40-15-07	7	CHANGED
30-40-15-10	1	CHANGED
30-40-15-10	2	CHANGED
30-40-15-10	3	CHANGED
30-40-15-10	4	CHANGED
30-40-15-10	5	CHANGED
30-40-15-10	6	CHANGED
30-40-15-11	1	CHANGED
30-40-15-11	2	CHANGED
30-40-15-11	3	CHANGED
30-40-15-11	4	CHANGED
30-40-15-11	5	CHANGED
30-40-15-11	6	CHANGED
30-40-15-11	7	CHANGED
30-40-15-11	8	CHANGED
30-40-15-11	9	DELETED
30-40-15-12	1	CHANGED
30-40-15-12	6	CHANGED
30-40-15-12	7	CHANGED
30-40-15-12	8	CHANGED
30-40-20-03	1	CHANGED
30-40-20-03	2	CHANGED
30-40-20-03	4	CHANGED
30-40-20-05	1	CHANGED
30-40-20-05	2	CHANGED
30-40-20-05	3	CHANGED
30-40-20-05	4	CHANGED
30-40-20-05	5	CHANGED
30-40-20-05	6	CHANGED
30-80-10-02	1	CHANGED
30-80-10-02	2	CHANGED
30-80-10-03	3	CHANGED
31 EFF PG	1	CHANGED
31 EFF PG	2	CHANGED

31	1	CHANGED
31	2	CHANGED
31-50-05-03	1	CHANGED
31-50-05-03	2	CHANGED
31-50-05-03	3	CHANGED
31-50-05-03	4	CHANGED
31-50-05-03	5	ADDED
32 EFF PG	1	CHANGED
32	1	CHANGED
32-60-10-04	1	CHANGED
32-60-10-04	2	CHANGED
32-60-10-04	3	CHANGED
32-60-10-04	4	CHANGED
32-60-10-04	5	CHANGED
32-60-10-04	6	CHANGED
32-60-10-04	7	CHANGED
32-60-10-04	8	CHANGED
32-60-10-04	9	CHANGED
32-60-30-02	1	CHANGED
32-60-30-02	2	CHANGED
32-60-30-03	1	CHANGED
32-60-30-03	2	CHANGED
32-60-30-03	3	CHANGED
33 EFF PG	1	CHANGED
33 EFF PG	2	CHANGED
33	1	CHANGED
33	2	CHANGED
33	3	CHANGED
33	4	CHANGED
33	5	CHANGED
33	6	CHANGED
33	7	CHANGED
33-10-05-05	1	CHANGED
33-10-05-05	2	CHANGED
33-10-05-05	3	CHANGED
33-10-05-05	4	CHANGED
33-10-05-05	5	CHANGED
33-10-05-05	6	CHANGED
33-10-05-05	7	CHANGED
33-10-05-05	8	CHANGED
33-10-05-05	9	CHANGED
33-10-05-05	10	CHANGED
33-10-05-05	11	CHANGED
33-10-05-05	12	CHANGED
33-10-05-07	1	CHANGED
33-10-05-07	3	CHANGED
33-10-05-07	4	CHANGED
33-10-05-07	5	CHANGED
33-10-05-07	6	CHANGED
33-10-05-07	7	CHANGED
33-10-05-07	8	CHANGED
33-10-05-07	9	CHANGED
33-10-05-07	10	CHANGED
33-10-05-07	11	CHANGED
33-10-05-07	12	CHANGED
33-10-05-07	13	CHANGED
33-10-05-08	1	CHANGED
33-10-05-08	3	CHANGED
33-10-05-08	4	CHANGED
33-10-05-08	5	CHANGED
33-10-05-08	6	CHANGED
33-10-05-08	8	CHANGED
33-10-05-08	9	CHANGED
33-10-05-08	10	CHANGED
33-10-05-08	11	CHANGED
33-10-05-08	12	CHANGED
33-10-05-08	13	DELETED
33-10-05-09	4	CHANGED
33-10-05-09	5	CHANGED
33-10-05-09	6	CHANGED
33-10-05-09	7	CHANGED
33-10-05-09	8	CHANGED
33-10-05-09	9	CHANGED
33-10-05-09	10	CHANGED
33-10-05-09	11	CHANGED
33-10-05-09	12	CHANGED
33-10-05-09	13	CHANGED
33-10-05-09	14	CHANGED
33-10-05-09	15	CHANGED
33-10-05-09	16	DELETED
33-10-05-09	17	DELETED
33-10-05-11	1	CHANGED
33-10-05-11	3	CHANGED
33-10-05-11	4	CHANGED
33-10-05-11	5	CHANGED
33-10-05-11	6	CHANGED
33-10-05-11	7	CHANGED
33-10-05-11	8	CHANGED
33-10-05-11	9	CHANGED
33-10-05-11	10	CHANGED
33-10-05-11	11	CHANGED
33-10-05-11	12	CHANGED
33-10-05-11	13	CHANGED
33-10-05-11	14	CHANGED
33-10-05-11	15	CHANGED
33-10-05-11	16	CHANGED
33-10-05-11	17	DELETED
33-10-20-04	2	CHANGED
33-10-20-04	3	CHANGED
33-10-20-04	4	CHANGED
33-10-20-04	5	CHANGED
33-10-20-04	6	CHANGED

33-10-20-04	7	CHANGED
33-10-20-04	8	CHANGED
33-10-20-04	9	CHANGED
33-10-20-04	10	CHANGED
33-10-20-07	1	CHANGED
33-10-20-07	2	CHANGED
33-10-20-07	3	CHANGED
33-10-20-07	4	CHANGED
33-10-20-07	5	CHANGED
33-10-20-07	6	CHANGED
33-10-20-07	7	CHANGED
33-10-20-07	8	CHANGED
33-10-20-08	3	CHANGED
33-10-20-08	4	CHANGED
33-10-20-08	5	CHANGED
33-10-20-08	6	CHANGED
33-10-20-08	7	CHANGED
33-10-20-08	8	CHANGED
33-10-20-08	9	CHANGED
33-10-20-08	10	CHANGED
33-10-20-08	11	DELETED
33-20-10-10	1	CHANGED
33-20-10-10	2	CHANGED
33-30-05-07	2	CHANGED
34 EFF PG	1	CHANGED
34	1	CHANGED
34	2	CHANGED
34-13-01-04	1	CHANGED
34-13-01-04	2	CHANGED
34-13-01-04	3	CHANGED
34-13-01-04	4	CHANGED
34-13-01-04	5	CHANGED
34-13-01-04	6	DELETED
34-13-01-08	1	CHANGED
34-13-01-08	2	CHANGED
34-13-01-08	3	CHANGED
34-13-01-08	4	CHANGED
49 EFF PG	1	CHANGED
49	1	CHANGED
49-60-30-06	1	CHANGED
49-60-30-06	2	CHANGED
49-60-30-06	3	CHANGED
49-60-30-06	4	CHANGED
49-60-30-06	5	CHANGED
49-60-30-06	6	CHANGED
49-60-30-06	7	CHANGED
49-60-30-06	8	CHANGED
49-60-30-08	1	CHANGED
49-60-30-08	2	CHANGED
49-60-30-08	3	CHANGED
49-60-30-08	4	CHANGED
49-60-30-08	5	CHANGED
49-60-30-08	6	CHANGED
49-60-30-08	7	CHANGED
49-60-30-08	8	CHANGED
49-60-30-08	9	CHANGED
49-60-30-08	10	CHANGED
49-60-30-08	11	CHANGED
49-60-30-08	12	CHANGED
49-60-30-08	13	CHANGED
49-60-30-09	1	CHANGED
49-60-30-09	2	CHANGED
49-60-30-09	3	CHANGED
49-60-30-09	4	CHANGED
49-60-30-09	5	CHANGED
49-60-30-09	6	CHANGED
49-60-30-09	7	CHANGED
49-60-30-09	8	CHANGED
49-60-30-11	1	CHANGED
49-60-30-11	2	CHANGED
49-60-30-11	3	CHANGED
49-60-30-11	4	CHANGED
49-60-30-11	5	CHANGED
49-60-30-11	6	CHANGED
49-60-30-11	7	CHANGED
49-60-30-11	8	ADDED
52 EFF PG	1	CHANGED
52	1	CHANGED
73 EFF PG	1	CHANGED
73	1	CHANGED
73-20-01-05	1	CHANGED
73-20-01-05	2	CHANGED
73-20-01-05	3	CHANGED
73-20-01-05	4	CHANGED
73-20-02-05	1	CHANGED
73-20-02-05	2	CHANGED
73-20-02-05	3	CHANGED
73-20-02-05	4	CHANGED
73-20-10-03	1	CHANGED
73-20-10-03	2	CHANGED
73-20-10-03	3	CHANGED
73-20-10-03	4	CHANGED
73-20-10-03	5	CHANGED
77 EFF PG	1	CHANGED

77	1	CHANGED
77	2	CHANGED
77	3	CHANGED
77-10-10-02	1	CHANGED
77-10-10-02	2	CHANGED
77-10-10-02	3	CHANGED
77-10-10-02	4	CHANGED
77-20-10-02	1	CHANGED
77-20-10-02	2	CHANGED
77-40-10-02	1	CHANGED
77-40-10-02	2	CHANGED
78 EFF PG	1	CHANGED
78	1	CHANGED
78-30-05-02	2	CHANGED
79 EFF PG	1	CHANGED
79	1	CHANGED
80 EFF PG	1	CHANGED
80	1	CHANGED
80-10-10-04	1	CHANGED
80-10-10-04	2	CHANGED
80-10-10-04	3	CHANGED
80-10-10-04	4	CHANGED
80-10-10-04	5	CHANGED
80-10-10-04	6	CHANGED

Raytheon Aircraft Company
9709 E Central
Wichita, KS 27201 - 00855

Manual Reference: WPC - 125 - 800

LETTER OF TRANSMITTAL - REVISION 09

INSTRUCTION TO INCORPORATING THIS REVISION

1. Check package labels to confirm receipt of correct revision copy.
2. Ensure that revision No. 8 has been incorporated.
3. This revision transmittal consists of pages 1 to 3
4, Remove old pages of Introduction and insert new pages 1 to 17
5, Retain this letter of transmittal and file at the front of the manual.
6, When this revision has been incorporated, please sign the Record of Revision Card and enter the date.

TABLE OF CONTENTS	1	CHANGED
TABLE OF CONTENTS	2	CHANGED
MOD STATEMENT	1	CHANGED
W D LISTING	1	CHANGED
	THRU	
W D LISTING	12	CHANGED
INTRO	1	CHANGED
	THRU	
INTRO	17	CHANGED
VENDORS	1	CHANGED
	THRU	
VENDORS	16	CHANGED
ALPHA-NUM	1	CHANGED
	THRU	
ALPHA-NUM	101	CHANGED
NUM-NUM	1	CHANGED
	THRU	
NUM-NUM	48	CHANGED
ELEC ID INDEX	1	CHANGED
ELEC ID INDEX	2	CHANGED
ELEC ID INDEX	3	CHANGED
ELEC ID INDEX	4	CHANGED
ELEC ID INDEX	5	CHANGED
ELEC ID INDEX	6	CHANGED
ELEC ID INDEX	7	CHANGED
ELEC ID INDEX	8	CHANGED
ELEC ID INDEX	9	CHANGED
ELEC ID INDEX	10	CHANGED
ELEC ID INDEX	11	CHANGED
ELEC ID INDEX	12	CHANGED
ELEC ID INDEX	13	CHANGED
ELEC ID INDEX	14	CHANGED
ELEC ID INDEX	15	CHANGED
ELEC ID INDEX	16	CHANGED
ELEC ID INDEX	17	CHANGED
ELEC ID INDEX	18	CHANGED
ELEC ID INDEX	19	CHANGED
ELEC ID INDEX	20	CHANGED
	THRU	
ELEC ID INDEX	162	CHANGED
21 EFF PG	1	CHANGED
21	1	CHANGED
21	2	CHANGED
21	3	CHANGED
22 EFF PG	1	CHANGED
22	1	CHANGED
23 EFF PG	1	CHANGED
23	1	CHANGED
24 EFF PG	1	CHANGED
24 EFF PG	2	CHANGED
24 EFF PG	3	CHANGED
24	1	CHANGED
24	2	CHANGED
24	3	CHANGED
24	4	CHANGED
24	5	CHANGED
24	6	CHANGED
24	7	CHANGED
26 EFF PG	1	CHANGED
26	1	CHANGED
26	2	CHANGED
27 EFF PG	1	CHANGED
27	1	CHANGED
27	2	CHANGED
27	3	CHANGED
27	4	CHANGED
27	5	CHANGED
28 EFF PG	1	CHANGED
28	1	CHANGED
28	2	CHANGED
28	3	CHANGED
29 EFF PG	1	CHANGED
29	1	CHANGED
30 EFF PG	1	CHANGED
30 EFF PG	2	CHANGED
30	1	CHANGED
30	2	CHANGED
30	3	CHANGED
30	4	CHANGED
30	5	CHANGED
31 EFF PG	1	CHANGED
31 EFF PG	2	CHANGED
31	1	CHANGED
31	2	CHANGED
31-50-01-07	1	CHANGED
31-50-01-07	2	CHANGED
31-50-01-07	3	CHANGED
31-50-01-07	4	CHANGED
31-50-01-07	5	CHANGED
31-50-01-07	6	CHANGED
31-50-01-07	7	CHANGED
31-50-01-07	8	CHANGED
31-50-01-07	9	CHANGED
31-50-01-08	1	CHANGED
31-50-01-08	2	CHANGED
31-50-01-08	3	CHANGED
31-50-01-08	4	CHANGED
31-50-01-08	5	CHANGED
31-50-01-08	6	CHANGED
31-50-01-08	7	CHANGED
31-50-01-08	8	CHANGED
31-50-01-08	9	CHANGED

31-50-05-03	1	CHANGED
31-50-05-03	2	CHANGED
31-50-05-03	3	CHANGED
31-50-05-03	4	CHANGED
31-50-05-03	5	DELETED
32 EFF PG	1	CHANGED
32	1	CHANGED
33 EFF PG	1	CHANGED
33 EFF PG	2	CHANGED
33	1	CHANGED
33	2	CHANGED
33	3	CHANGED
33	4	CHANGED
33	5	CHANGED
33	6	CHANGED
33	7	CHANGED
34 EFF PG	1	CHANGED
34	1	CHANGED
34	2	CHANGED
49 EFF PG	1	CHANGED
49	1	CHANGED
52 EFF PG	1	CHANGED
52	1	CHANGED
73 EFF PG	1	CHANGED
73	1	CHANGED
77 EFF PG	1	CHANGED
77	1	CHANGED
77	2	CHANGED
77	3	CHANGED
78 EFF PG	1	CHANGED
78	1	CHANGED
79 EFF PG	1	CHANGED
79	1	CHANGED
80 EFF PG	1	CHANGED
80	1	CHANGED
80-10-10-04	1	CHANGED

Raytheon Aircraft Company
9709 E Central
Wichita, KS 27201 - 00855

Manual Reference: WPC - 125 - 800

LETTER OF TRANSMITTAL - REVISION 08

INSTRUCTION TO INCORPORATING THIS REVISION

1. Check package labels to confirm receipt of correct revision copy.
2. Ensure that revision No. 7 has been incorporated.
3. This revision transmittal consists of pages 1 to 3
4. Retain this letter of transmittal and file at the front of the manual.
5. When this revision has been incorporated, please sign the Record of Revision Card and enter the date.

MOD STATEMENT	1	CHANGED
W D LISTING	1	CHANGED
	THRU	
W D LISTING	12	CHANGED
VENDORS	1	CHANGED
	THRU	
VENDORS	16	CHANGED
ALPHA-NUM	1	CHANGED
	THRU	
ALPHA-NUM	101	CHANGED
NUM-NUM	1	CHANGED
	THRU	
NUM-NUM	48	CHANGED
ELEC ID INDEX	1	CHANGED
ELEC ID INDEX	2	CHANGED
ELEC ID INDEX	3	CHANGED
ELEC ID INDEX	4	CHANGED
ELEC ID INDEX	5	CHANGED
ELEC ID INDEX	6	CHANGED
ELEC ID INDEX	7	CHANGED
ELEC ID INDEX	8	CHANGED
ELEC ID INDEX	9	CHANGED
ELEC ID INDEX	10	CHANGED
ELEC ID INDEX	11	CHANGED
ELEC ID INDEX	12	CHANGED
ELEC ID INDEX	13	CHANGED
ELEC ID INDEX	14	CHANGED
ELEC ID INDEX	15	CHANGED
ELEC ID INDEX	16	CHANGED
ELEC ID INDEX	17	CHANGED
ELEC ID INDEX	18	CHANGED
ELEC ID INDEX	19	CHANGED
ELEC ID INDEX	20	CHANGED
ELEC ID INDEX	21	CHANGED
ELEC ID INDEX	22	CHANGED
ELEC ID INDEX	23	CHANGED
ELEC ID INDEX	24	CHANGED
ELEC ID INDEX	25	CHANGED
	THRU	
ELEC ID INDEX	162	CHANGED
21 EFF PG	1	CHANGED
21	1	CHANGED
21	2	CHANGED
21	3	CHANGED
22 EFF PG	1	CHANGED
22	1	CHANGED
23 EFF PG	1	CHANGED
23	1	CHANGED
24 EFF PG	1	CHANGED
24 EFF PG	2	CHANGED
24 EFF PG	3	CHANGED
24	1	CHANGED
24	2	CHANGED
24	3	CHANGED
24	4	CHANGED
24	5	CHANGED
24	6	CHANGED
24	7	CHANGED
26 EFF PG	1	CHANGED
26	1	CHANGED
26	2	CHANGED
26-10-10-03	5	CHANGED
26-10-10-03	6	CHANGED
26-10-10-03	7	CHANGED
27 EFF PG	1	CHANGED
27	1	CHANGED
27	2	CHANGED
27	3	CHANGED
27	4	CHANGED
27	5	CHANGED
28 EFF PG	1	CHANGED
28	1	CHANGED
28	2	CHANGED
28	3	CHANGED
29 EFF PG	1	CHANGED
29	1	CHANGED
30 EFF PG	1	CHANGED
30 EFF PG	2	CHANGED
30	1	CHANGED
30	2	CHANGED
30	3	CHANGED
30	4	CHANGED
30	5	CHANGED
31 EFF PG	1	CHANGED
31 EFF PG	2	CHANGED
31	1	CHANGED
31	2	CHANGED
32 EFF PG	1	CHANGED
32	1	CHANGED
33 EFF PG	1	CHANGED
33 EFF PG	2	CHANGED
33	1	CHANGED
33	2	CHANGED
33	3	CHANGED
33	4	CHANGED
33	5	CHANGED
33	6	CHANGED
33	7	CHANGED
34 EFF PG	1	CHANGED
34	1	CHANGED
34	2	CHANGED
49 EFF PG	1	CHANGED

49		1 CHANGED
52	EFF PG	1 CHANGED
52		1 CHANGED
73	EFF PG	1 CHANGED
73		1 CHANGED
77	EFF PG	1 CHANGED
77		1 CHANGED
77		2 CHANGED
77		3 CHANGED
78	EFF PG	1 CHANGED
78		1 CHANGED
79	EFF PG	1 CHANGED
79		1 CHANGED
80	EFF PG	1 CHANGED
80		1 CHANGED

WIRING PARTS CATALOG - TABLE OF CONTENTS

SERVICE BULLETIN AND MODIFICATION STATEMENT

INTRODUCTION	**Page No.**
Purpose	1
Spare Parts	1
General System of Assembly Order - Detailed Parts List (DPL)	1
Index Systems	1
Customer Airplane Information - Cross Reference	5
Vendor Names and Addresses/ Supply Codes Index	5
List of Effective Pages	6
Table of Contents	6
Revision Transmittal List	6
Part Numbering System	7
Detailed Parts List	9
Explanation of Detailed Parts List	11
Explanation of Electrical Ident Call Up	13
Typical Examples of Ident Call Up	13
Instructions to Locate a Part in the Detailed Parts List	14
Effectivity	16
Spares Condition Codes	17
Warning	17

VENDOR'S NAMES AND ADDRESSES

NUMERICAL INDEX

DETAILED PARTS LIST

AIRCRAFT SYSTEM CHAPTERS

SYSTEM CHAPTER	*CHAPTER*
Placards and Markings	11
Air Conditioning	21
Auto Pilot	22
Communications	23
Electrical Power	24
Equipment / Furnishings	25
Fire Protection	26
Flight Controls	27
Fuel	28
Hydraulic Power	29
Ice and Rain Protection	30
Indicating and Recording	31
Landing Gear	32
Lights	33
Navigation	34
Oxygen	35
Water / Waste	38
Auxiliary Power Unit	49
Doors	52
Fuselage	53
Nacelles / Pylons	54
Stabilizers	55
Windows	56
Wings	57
Power Plant	71
Engine	72
Engine Fuel and Control	73
Engine Air	75
Engine Controls	77
Exhaust	78
Engine Oil	79
Engine Starting	80

INTRODUCTION

PURPOSE

This Wiring Parts Catalog (WPC) is prepared, issued and revised by Raytheon Aircraft Company (RAC) for the exclusive use of its customers and is intended to be used for provisioning, requisitioning, storing and issuing line replaceable airplane parts. The contents are proprietary to RAC and its customers and are subject to change. The use of any part of this document by any other person or persons, or for any other purpose without the prior consent of RAC is expressly prohibited. This document is produced to support the configuration of the airplane at the time of delivery to the original customer and does not necessarily reflect the current configuration of any specific airplane.

NOTE: This catalog should be used in conjunction with the Wiring Diagram Manual supplied with the airplane upon delivery.

The part number content of this document, arrangement and breakdown sequence of items are compatible with the Air Transport Association (ATA) Specification No. 100.

SPARE PARTS

The maintenance and airworthiness of this airplane is dependent upon the use of replacement parts which have been manufactured, inspected and assembled to drawings and specifications approved for the airplane.

GENERAL SYSTEM OF ASSEMBLY ORDER - DETAILED PARTS LIST (DPL)

The indenture system used in the DPL of this catalog shows the relationship of a Wiring Diagram to its detailed parts in electrical ident order. For a given item/ident., the number of indentures depicts the relationship of the items to the associated installation, next higher assembly if applicable or components of the item/ident. as follows:

```
1       2       3       4       5       6       7
Wiring Diagram
        Detail Parts
OR
Wiring Diagram
        Reference Assembly
                Detail Parts
```

INDEX SYSTEMS

The Numerical Index is a complete alpha/numeric listing of all part numbers contained in the Detailed Parts List of the Wiring Parts Catalog. The index is divided into three sections.

(1) ***Numerical Index - Alpha***: This section contains part numbers whose first digit is an alpha character (see example 1).

(2) ***Numerical Index - Numeric***: This section contains part numbers whose first digit is a numeric character (see example 2).

(3) ***Ident to Figure Location Index***: This section contains the electrical ident, the CSUF location in the catalog and the part number (see example 3).

EXAMPLE 1: Alpha Part Numbers

Raytheon Aircraft

HAWKER 800XP WIRING PARTS CATALOG

PART NUMBER CH-SECT-UNIT-FIG-ITEM	IDENT
A703FSS	
49-60-30 08	K12-ZKA
49-60-30 09	D-GA
49-60-30 09	G-GA
49-60-30 09	K11-ZKA
49-60-30 09	K12-ZKA
49-60-30 11	D-GA
49-60-30 11	K11-ZKA
49-60-30 11	K12-ZKA
80-10-10 04	D-GA
80-10-10 04	G-GA
A703ZS	
24-30-10 02	H-GA
24-30-20 02	C-GA
24-30-20 03	C-GA
24-50-01 05	C-GA
24-50-01 05	H-GA
24-50-01 06	C-GA
24-50-01 06	H-GA
24-50-01 07	C-GA
24-50-01 07	H-GA
49-60-10 05	J-GA
49-60-30 06	C-GA
49-60-30 08	C-GA
49-60-30 09	C-GA
49-60-30 11	C-GA
A770RSSA	
24-31-10 02	J-ZL
24-50-01 05	J-ZL
24-50-01 05	K-ZL
24-50-01 06	J-ZL
24-50-01 06	K-ZL
24-50-01 07	J-ZL
24-50-01 07	K-ZL
80-10-10 04	J-ZL
80-10-10 04	K-ZL
A84MAS	
24-50-01 05	U-ZL
24-50-01 06	U-ZL
24-50-01 07	U-ZL
49-60-30 06	U-ZL
49-60-30 08	U-ZL
49-60-30 09	U-ZL
A848MAS	
28-21-05 02	U-ZL
28-21-05 03	U-ZL
28-21-05 04	U-ZL
49-60-10 05	U-ZL
80-10-10 04	U-ZL
A848MASMODA	
24-50-01 05	U-ZL

PART NUMBER CH-SECT-UNIT-FIG-ITEM	IDENT
A848MASMODA	
24-50-01 06	U-ZL
24-50-01 07	U-ZL
49-60-10 05	U-ZL
A897OC1	
33-10-10 31	ACL-CA
33-10-10 31	ACL-CD
33-10-10 31	ADL-CA
33-10-10 31	ADL-CD
33-10-10 31	AEL-CA
33-10-10 31	AEL-CD
33-10-10 31	AJL-CD
33-10-10 31	AML-CD
33-10-10 31	AQL-CD
A897OC2	
33-10-10 31	ALL-CD
33-10-10 31	ANL-CD
33-10-10 31	APL-CD
A897SC2	
33-10-10 31	AKL-CD
BAEFER000004075	
28-21-05 02	P2-JA-P
BAEREF000003101	
22-00-30 51	C1
22-00-30 51	C2
22-00-30 51	C3
22-00-30 52	C1
22-00-30 52	C2
22-00-30 52	C3
23-33-10 06	G
25-60-10 52	TB716-1
25-60-10 52	TB716-2
BAEREF000003102	
29-32-10 05	QN-R
31-30-10 55	P284
31-30-10 56	P284
31-30-10 58	P284
34-52-50 51	P980
BAEREF000003118	
22-10-60 51	P129D
22-10-60 52	P129D
22-10-60 53	P129D
22-10-60 54	P129D
22-11-10 51	P129D
22-13-10 51	P129D
22-14-10 51	P129D
23-01-10 51	P129D
23-01-10 52	P129D
23-01-10 53	P129D
23-01-10 54	P129D
23-11-10 62	P625

MASTER

PART NUMBER INDEX-ALPHA
PAGE 2
MAR 15/96

Printed in England

M50038

M6971_0
HA00F
018476AA

EXAMPLE 2: Numeric Part Numbers

Raytheon Aircraft

HAWKER 800XP WIRING PARTS CATALOG

PART NUMBER CH-SECT-UNIT-FIG-ITEM	IDENT
25-8NF2853-1A	
25-30-10 31	AY-FG
25-30-10 38	AY-FG
25-8NF2869	
33-21-20 15	SR
25-8NF2901	
25-40-10 07	FGA-P
25-8NF2901-1A	
23-30-20 54	PLFG-A
25-8NF2909-1A	
25-30-10 18	FGA
25-8NF2921-1A	
33-10-05 05	CE
33-10-05 05	CP
33-10-05 07	CE
33-10-05 07	CP
33-10-05 08	CE
33-10-05 08	CP
33-10-05 09	CE
33-10-05 09	CP
33-10-05 10	CE
33-10-05 10	CP
33-10-05 11	CE
33-10-05 11	CP
25-8NF3103-49	
33-21-10 21	A-PL477
33-21-10 22	A-PL477
25-8NF3103-51	
33-21-10 21	D-PL477
33-21-10 22	D-PL477
25-8NF3131A	
22-00-10 51	B530
22-00-10 52	B530
22-00-10 53	B530
25-8NF3133A	
22-00-20 51	B532
22-00-20 52	B532
22-00-20 53	B532
22-00-20 54	B532
25-8NF3135A	
22-00-20 51	B534
22-00-20 52	B534
22-00-20 53	B534
22-00-20 54	B534
25-8NF3137A	
22-00-10 51	B531
22-00-10 52	B531
22-00-10 53	B531
25-8NF3139A	
22-00-20 51	B533
22-00-20 52	B533

PART NUMBER CH-SECT-UNIT-FIG-ITEM	IDENT
25-8NF3139A	
22-00-20 53	B533
22-00-20 54	B533
25-8NF3141-1A	
22-00-10 53	PL529
25-8NF3143-1A	
22-00-20 51	PL535
22-00-20 52	PL535
22-00-20 53	PL535
22-00-20 54	PL535
25-8NF3145-1A	
22-00-10 53	PL536
22-00-20 51	PL536
22-00-20 52	PL536
22-00-20 53	PL536
22-00-20 54	PL536
34-20-10 51	PL536
34-20-10 52	PL536
34-20-10 53	PL536
34-20-10 54	PL536
34-20-10 56	PL536
34-20-30 51	PL536
34-20-30 52	PL536
34-20-30 53	PL536
34-20-30 54	PL536
34-20-30 56	PL536
25-8NF3159-1A	
22-10-20 51	A250
22-10-20 52	A250
22-10-20 53	A250
22-10-60 51	A250
22-10-60 52	A250
22-10-60 53	A250
22-10-60 54	A250
25-8NF3163-25A	
34-12-40 51	TB563
25-8NF3207-1A	
23-30-50 52	PL477
25-8NF3207-9A	
23-30-50 63	PL477
25-8NF3231	
34-20-10 51	W118
34-20-10 52	W118
34-20-10 53	W118
34-20-10 54	W118
34-20-10 56	W118
25-8NF3233	
34-20-30 51	W119
34-20-30 52	W119
34-20-30 53	W119
34-20-30 54	W119

MASTER

PART NUMBER INDEX-NUMERIC
PAGE 54
MAR 15/96
M50039

Printed in England

M6972_0
HA00F
018477AA

EXAMPLE 3: Ident to Figure Location

Raytheon Aircraft

HAWKER 800XP WIRING PARTS CATALOG

	IDENT CH-SECT-UNIT-FIG	PART NUMBER
	B130-DAD	
	24-50-05 08	SPARE
	24-50-05 09	483TCG11J25-3A
	24-50-05 11	483TCG11J25-3A
	24-50-05 12	483TCG11J25-3A
	24-50-05 14	483TCG11J25-3A
	24-50-05 15	483TCG11J25-3A
	24-50-05 16	483TCG11J25-3A
	24-50-05 17	483TCG11J25-3A
	24-50-05 18	483TCG11J25-3A
	24-50-05 19	483TCG11J25-3A
	24-50-05 20	483TCG11J25-3A
	B131-DAD	
	21-20-10 03	483TCG11J25-5A
	24-50-05 08	483TCG11J25-5A
	24-50-05 09	483TCG11J25-5A
	24-50-05 11	483TCG11J25-5A
	24-50-05 12	483TCG11J25-5A
	24-50-05 14	483TCG11J25-5A
	24-50-05 15	483TCG11J25-5A
	24-50-05 16	483TCG11J25-5A
	24-50-05 17	483TCG11J25-5A
	24-50-05 18	483TCG11J25-5A
	24-50-05 19	483TCG11J25-5A
	24-50-05 20	483TCG11J25-5A
	B132-DAD	
	24-50-05 19	25-8NF2217-15
	24-50-05 20	25-8NF2217-15
	24-50-05 16	25-8NF2217-15A
	24-50-05 17	25-8NF2217-15A
	24-50-05 18	25-8NF2217-15A
	B132-DAD	
R	21-20-10 03	25-8NF2217-15
R	24-50-05 08	25-8NF2217-15
R	24-50-05 09	25-8NF2217-15
R	24-50-05 11	25-8NF2217-15
R	24-50-05 12	25-8NF2217-15
R	24-50-05 14	25-8NF2217-15
R	24-50-05 15	25-8NF2217-15
	B133-DAD	
	24-50-07 59	25-8NF2217-20
	24-50-07 61	25-8NF2217-20
	24-50-07 64	25-8NF2217-20
	24-50-07 65	25-8NF2217-20
	24-50-07 69	25-8NF2217-20
	24-50-07 70	25-8NF2217-20
R	24-50-07 71	25-8NF2217-20
	25-40-10 07	25-8NF2217-20
	25-40-10 08	25-8NF2217-20
	25-40-10 09	25-8NF2217-20
	25-40-10 11	25-8NF2217-20

	IDENT CH-SECT-UNIT-FIG	PART NUMBER
	B133-DAD	
	25-40-10 12	25-8NF2217-20
	25-40-10 13	25-8NF2217-20
	25-40-10 14	25-8NF2217-20
	25-40-10 15	25-8NF2217-20
	25-40-10 16	25-8NF2217-20
	25-40-10 18	25-8NF2217-20
R	25-40-10 19	25-8NF2217-20
	24-50-07 47	25-8NF2217-20A
	24-50-07 48	25-8NF2217-20A
	24-50-07 49	25-8NF2217-20A
	24-50-07 50	25-8NF2217-20A
	24-50-07 51	25-8NF2217-20A
	24-50-07 52	25-8NF2217-20A
	24-50-07 54	25-8NF2217-20A
	24-50-07 55	25-8NF2217-20A
	24-50-07 56	25-8NF2217-20A
	24-50-07 57	25-8NF2217-20A
	24-50-07 58	25-8NF2217-20A
	24-50-07 60	25-8NF2217-20A
	24-50-07 62	25-8NF2217-20A
	24-50-07 66	25-8NF2217-20A
	24-50-07 65	483-96TCK14-20A
	B133-DAD	
R	24-50-07 32	25-8NF2217-20
R	24-50-07 33	25-8NF2217-20
R	24-50-07 37	25-8NF2217-20
R	24-50-07 40	25-8NF2217-20
R	24-50-07 41	25-8NF2217-20
R	24-50-07 42	25-8NF2217-20
R	24-50-07 46	25-8NF2217-20
	B134-DAD	
	24-50-07 59	25-8NF2217-20
	24-50-07 61	25-8NF2217-20
	24-50-07 64	25-8NF2217-20
	24-50-07 65	25-8NF2217-20
	24-50-07 69	25-8NF2217-20
	24-50-07 70	25-8NF2217-20
R	24-50-07 71	25-8NF2217-20
	25-40-10 07	25-8NF2217-20
	25-40-10 08	25-8NF2217-20
	25-40-10 09	25-8NF2217-20
	25-40-10 11	25-8NF2217-20
	25-40-10 12	25-8NF2217-20
	25-40-10 13	25-8NF2217-20
	25-40-10 14	25-8NF2217-20
	25-40-10 15	25-8NF2217-20
	25-40-10 16	25-8NF2217-20
	25-40-10 18	25-8NF2217-20
R	25-40-10 19	25-8NF2217-20
	24-50-07 47	25-8NF2217-20A

MASTER

ELECTRICAL IDENT INDEX
PAGE 56
MAR 15/96

Printed in England

M50037

M6973_0
HA00F
018478AA

INDEX SYSTEMS (Continued)

The alphabetical "O" will be shown always in the numeric sequence under zero "0". Entries in these indexes refer to the Chapter, Section, Unit, Figure and Item number (CSUFI) in the Detailed Parts List, where each part number appears in accordance with the ATA Specification No. 100.

Only the total quantity per airplane is quoted for Standard bolts, nuts, pins, screws, washers etc., except when the total exceeds one thousand then 999 is used. Parts without a specific part number are allotted a 125REF No. 000001 - 125REF No. 999999 or a BAEREF No. 000001 - BAEREF No. 999999, the specification given in the nomenclature will appear in the index.

The numeric arrangement sequence is derived by commencing from the extreme left-hand position of each part number, and continuing from left to right one digit at a time, until all parts are in order. The order of precedence in beginning the part number arrangement on the left-hand (first) position is as follows:

Letters	A TO Z
Numerals	0 TO 9

NOTE: An alphabetical "O" is considered as a numerical zero "0".

The order of precedence in continuing the part number arrangement on the second and succeeding positions of the part number from left to right is as follows:

Horizontal dash	(-)
Full point	(.)
Letters	A to Z
Numerals	0 to 9

NOTE: Horizontal dashes do not appear in the extreme left hand (first) position, but in the second and succeeding positions they take precedence over letters and numericals as listed above. In order to achieve a basic standard for the wide variety of part numbers listed, all spaces and oblique strokes (/) have been omitted and breaks between whole numbers are indicated by a horizontal dash. No break is indicated between letter and numerical or letter and letter.

CUSTOMER AIRPLANE INFORMATION CROSS REFERENCE

Relates the effectivity code shown in the Detailed Parts List to the corresponding airplane effectivity number and manufacturing number.

VENDORS NAMES AND ADDRESSES/SUPPLY CODES INDEX

A listing of vendors referenced in the Detailed Parts List is given following this introduction. The list is arranged in vendor code sequence. Where vendors have not yet been assigned a NATO or Federal Manufacturers code, a RAC assigned code will have been given (prefixed +) and this will indicate the vendors address. All other codes have been selected from the "Federal Manufacturers Code catalog H4-1, H4-2 and NATO Code catalog H4-3". When a Federal Supply Code and a NATO Supply Code are both assigned to a manufacturer, the Federal Supply Code will be shown, with the NATO Supply Code shown as an Optional Vendor.

LIST OF EFFECTIVE PAGES

The List of Effective Pages preceding each chapter in the Detailed Parts List, is a sequential summary of all Chapter - Section - Unit - Figure - Page numbers depicting the current effective date for all the pages included in the applicable Chapter. An asterisk (*) preceding the entry indicates that the page has been changed or added by the current catalog revision. Refer directly to the affected page in the catalog to determine the reason for the asterisk (*). A comparison of asterisked pages to the Revision Transmittal (see below) and actual revised pages received, should reveal any discrepancies. Those discrepancies requiring resolution should be communicated immediately to RAC at the following address:

Raytheon Aircraft Company
Technical Publications, Dept. 976
PO Box 85
Wichita, KS 67201-0085

TABLE OF CONTENTS

The Table of Contents for the respective Chapter follow the List of Effective Pages. This table is sequentially arranged in section order. In addition each section contains an alphabetical list of all Unit Figure nomenclatures and their appropriate location. Major components included within a figure, but not specifically noted in the figure title, are also listed. This table is an important element in determining the location and identity of a part when the part number is not known.

REVISION TRANSMITTAL LIST

This is a list, transmitted with each WPC revision, which depicts the actual page numbers affected by the current revision. The list specifies whether those pages are added, changed or deleted. When incorporating a revision in the catalog, the list should be used in conjunction with the List of Effective Pages and actual revised pages.

Reissues nor revisions are neither automatically provided to the holder of this manual. For information on how to obtain reissues or revisions applicable to this manual, refer to the latest revision of the Raytheon Aircraft Company Service Bulletin No. 00-2001 or visit the web site at http://pubs.raytheonaircraft.com.

It shall be the responsibility of the owner/operator to ensure that the latest revision of the publications referenced in this manual are utilized during operation, servicing and maintenance of the airplane.

Raytheon Aircraft Company expressly reserves the right to supersede, cancel and/or declare obsolete any parts, part numbers, kits or publications that may be referenced in this manual without prior notice.

Additional publications are listed in the Current Publications web site at htpp://pubs.raytheonaircraft.com.

PART NUMBERING SYSTEM

Part numbers are developed by RAC for the following:

RAC Proprietary parts.

RAC Standard parts.

"125" and "BAe" Reference part number to cover overlength part numbers.

- RAC Proprietary part numbers developed for Hawker and BAe 125 airplanes conform to the scheme reflected below:

```
Examples:   25-8EZ11, 25DP171-109

25DP171-109
|  |     |_____Reference number.
|  |_____System
|_____Airplane type (Basic 125 or Hawker)

25-8 EZ 11
|      | |____Reference number
|      |___System
|___Airplane (125-800 or Hawker 800)
```

- BAe Proprietary part numbers developed for other airplane types used on the Hawker and BAe 125, conform to the schemes below:

```
Examples:   HC921H0467-000

HC 921 H0467-000
|   |      |____Reference number
|   |
|   |____System
|
|_____Aircraft type (AVRO 146)

21-1E CF 3485 - 123
|       |    |      |_ Dash number to designate installation
|       |    |         or detail part of basic drawing
|       |    |___ Reference number
|       |___ System
|___ Airplane type (TRIDENT 1E)
```

PART NUMBERING SYSTEM (Continued)

- RAC Standard part numbers are typically developed according to the following schemes:

```
Example:  S4103-123

S  4103  -123
|    |       |__Denotes further detail
|    |            within a standard.
|    |_____Standard number
|_____Prefix denoting RAC standard

Example:  SL4121-125

SL  4121   -125
|     |       |___Denotes further detail
|     |             within a standard.
|     |_____Standard number
|_____Prefix denoting RAC standard

Example:  DHS1097-146

DHS  1097  -146
|      |       |__Denotes further detail
|      |            within a standard.
|      |____Standard number
|_____Prefix denoting RAC standard
```

- 125 and BAe reference part numbers are sequentially assigned to provide Detailed Parts List coverage for existing part numbers, which are overlength, and for part numbers which are unassigned.

```
Example:  125REF000000006 or  BAEREF000000006

125REF000000006
or
BAEREF000000006
        |          |
        |          |_____Sequentially numbered
        |
        |_______Prefix denoting RAC or BAe reference
```

DETAILED PARTS LIST

The following is an explanation of the data contained in the Wiring Parts Catalog.

The following item numbers correspond to those shown on sample pages 11 and 12.

(1) **Figure Number** - The Figure number identifies a specific Wiring Diagram and the parts list defining a specific electrical or avionics system in the airplane. The Figure number appears in the footing of each applicable page as the fourth element of the number quoted.

(2) **Electrical Ident** - The electrical Ident corresponds to the electrical ident or reference on the Wiring Diagram, a dash (-) preceding the electrical ident indicates that the item is not Illustrated.

(3) **Units Per Assembly** - Entries are as follows:

(a) "RF" indicates that the item is listed again and is being used as a reference item, it is either an Installation or Non-suppliable item.

(b) The Units Per Assembly is given in the referenced location.

(c) "AR" indicates the part is used in a quantity "as required".

(d) A numeric entry indicates the quantity of the part used in the next higher assembly.

(4) **Vendor Code** - The vendor code is shown for vendor items only and located as shown below:

(a) Following the nomenclature, when the vendor's part number is reflected in the Part Number column.

(b) Following the Vendor Part Number, when the vendor's part number is reflected in the nomenclature column.

NOTE: The Vendor is either the 5 digit Manufacturer's Code as specified in the "Federal Manufacturer's Code catalog H4-1, H4-2, NATO Code catalog H4-3" or a 5 digit code assigned by RAC if the vendor is not identified in H4-1, H4-2 or H4-3. The Vendor's name and address corresponding to each code, is presented in a listing in vendor code sequence in the "Vendor's Names and Addresses Index" following the introduction.

(5) **125REF or BAEREF entries** - "125REF or BAEREF---------". These are reference part numbers assigned to overlength part numbers, that is, a part number exceeding fifteen (15) digits. The overlength part number will be found in the NOMENCLATURE field and where applicable identified by a Vendor Code. Both the reference number and the part number will appear in the Numerical Index. A "125REF or BAEREF---------" number is also assigned to a part which has no applicable part number but is identified by the nomenclature in the NOMENCLATURE column followed by the note "(P/N UNASSIGNED)". For example, raw material, vendor part or specification. In all cases the "125REF or BAEREF---------" number is the order number, the part supplied will be identified by the overlength part number found in the "overlength field". The Spares Department documentation will quote the "overlength part number". The "125REF or BAEREF -------" number is quoted as a "remarks" or "notes to" in the nomenclature column.

Detail Parts that have no determined part number on initial issue are listed as TBA in the part number column and UNASSIGNED in the item nomenclature, the actual part description following as the item description.

(6) **OPT** - Optional Part Numbers are listed in the nomenclature with corresponding vendor code following the description of the lead part number.

(7) **Effectivity** - See page 16 of this introduction.

(8) **L.H./R.H.** - Parts used on left hand or right hand installation or assembly, details will be designated (LH ONLY) or (RH ONLY) (Item not shown).

(9) **Alteration from Notes** - Parts made by altering other parts are indicated as (ALTERED FROM ---) in the nomenclature column. The altered from part number is listed also in the Numerical Index (Item not shown).

(10) **Used with Notes** - A (USED ON ---) or (USED WITH ---) note in the nomenclature column indicates the part number is used with the main assembly part number that is listed with the electrical ident.

(11) **Comprising of Notes** - A (COMPRISING OF ---) note in the nomenclature column indicates that the component is supplied with or made up with the part numbers listed.

(12) **Change Indicator** - Data contained in the catalog will be updated by the issuing of revised pages. Text pages will show the letter "R" adjacent to the line/lines being added or revised (Item not shown).

(13) **Fictitious Title** - Used as a general title for the figure or as a specific description of the system derived from the Wiring Diagram Title. The fictitious title is used to facilitate preparation and maintenance of the Table of Contents and Illustration Title entries.

(14) **Spares Condition** - An "S" is prefixed to a part that is supplied "Different to Drawing" with a code given in the nomenclature describing its condition (Item not shown). (See page 17 of this Introduction).

(15) **Preferred Spare** - A notation is given in the nomenclature against any item which is recommended as the current preferred spare for replenishment purposes. The item may be preferred for any number of reasons but is commonly an item other than that used in earlier applications.

(16) **Unit Exchange Item** - Several proprietary and vendor rotable parts may be purchased in lieu of new items through the Raytheon Aircraft Company Unit Exchange Scheme. These part numbers are identified in the WPC nomenclature as "(UNIT EXCHANGE ITEM)". If a unit exchange item is required, simply add the suffix "UX" to the part number when placing an order with our Spares Department. For example; part number WL717RSA3 would be ordered and supplied as WL717RSA3UX (Item not shown).

EXPLANATION OF DETAIL PARTS LIST

Raytheon Aircraft

HAWKER 800XP WIRING PARTS CATALOG

IDENT	PART NUM.	1234567 NOMENCLATURE	EFFECT FROM TO	UNITS PER ASSY
		ROOF/FLOOR VALVE AND RECIRCULATING FAN	091999	
	25-BNA5-274	WIRING DIAGRAM- (MOD 253149C)	091999	RF
AD-CC	2TP1-10	.SWITCH- (VK6596) (PRE MOD 253210A)	091116	1
AD-CC	2TP1-10M	.SWITCH- (VK6596) (MOD 253210A)	091999	1
-B131-DAD	483TCG11J25-5A	.CIRCUIT BREAKER-5A (VU0091)	091999	1
B132-DAD	25-BNF2217-15A	.CIRCUIT BREAKER-15A	091999	1
CC1-P	BAEREF000003123	.CONNECTOR-SOCKET (6027-20-41SNCONDB) (VK4161)	091999	1
	6026-20-41PN	.CONNECTOR-PLUG (VK4161) (OPT 6026-20-41PNCB (VK0316)) (OPT 6026-20-41CONDB (VK1793)) (OPT 6026-20-41CONDI (VK1100)) (USED WITH BACKSHELL: 602GB129-20-1 (VK1100) (OPT GTR62-20NACS1 (VU0419))	091999	1
CG11-P	MTCR16104P	.CONNECTOR-PIN (VK1010)	091999	1
CG11-R	MTCR10104S	.CONNECTOR-SOCKET (VK1010)	091999	
CG7-P	MTC100YH2-009	.SHELL-PLUG (VK1010) (USED WITH WAFERS: TYPE A, MTC100KT2-1101 TYPE B, MTC100KT2-1102)	091999	1
CG7-R	MTC100YH2-010	.SHELL-RECEPTACLE (VK1010) (USED WITH WAFERS: TYPE A, MTC100KT2-1103 TYPE B, MTC100KT2-1104)	091999	1
DA20-P	MTC100YH2-009	.SHELL-PLUG (VK1010) (USED WITH WAFERS: TYPE A, MTC100KT2-1101 TYPE B, MTC100KT2-1102)	091999	1

21-20-10-03

PAGE 1

MAY 31/94

Printed in England

M50034

1 2 3 4 5 6 7 10 13

SAMPLE PAGE

M6974_0
HA00F
018749AA

EXPLANATION OF DETAIL PARTS LIST (Continued)

Raytheon Aircraft

HAWKER 800XP WIRING PARTS CATALOG

IDENT	PART NUMBER	1234567 NOMENCLATURE	EFFECT FROM TO	UNITS PER ASSY
CX-B	MBC004	.LAMP HOLDER-NORMAL SIDEWALL FLOODLIGHTS (VU0928) (FOR SPARES PROCURE IN LIEU OF MBC17)	164165 167167 177179 181221 223223	1
D-T-DAE	BDX67A	.TRANSISTOR- (VK3954) (USED ON 25-8NF407-503A)	164165 167167 177179 181221 223223 225225 229232 234234 236236 238999	2
S-DAE	25-8NF405-503A	.HEAT SINK ASSY (COMPRISING: TRANSISTOR BDX67A (VK3954) RESISTOR 5905-99-0135622 (VK0064) RESISTOR 5905-99-0135626 (VK0064) TERMINAL BLOCK MWBUN1736S108 (VK0574))	164165 167167 177179 181221 223223 225225 229232 234234 236236 238999	1
SJ-DAJ	MTC100YH2-009	.SHELL-PLUG (VK1010) (USED WITH WAFERS: TYPE A, MTC100KT2-1103 TYPE B, MTC100KT2-1104)	164165 167167 177179 181221 223223 225225 229232 234234 236236 238999	1
SK-DAJ	MTC100YH2-010	.SHELL-RECEPTACLE (VK1010) (USED WITH WAFERS: TYPE A, MTC100KT2-1101 TYPE B, MTC100KT2-1102)	164165 167167 177179 181221 223223	1

15

11

10

33-10-05-09

PAGE 14

MAY 31/94

Printed in England

M50033

SAMPLE PAGE

M6975_0
HA00F
018480AA

EXPLANATION OF ELECTRICAL IDENT CALL UP

Every part number listed in the DPL is identified by an Electrical Ident (IDENT). This is the same IDENT that appears on the Wiring Diagram that is the subject of the DPL.

To further aid location the IDENT is coded in the DPL with the panel location it is mounted on or near the zone location as stated on the Wiring Diagram. This forms the second element of the IDENT. Some part numbers require further IDENT location description, for example connector plug or socket. This will be shown as the third element of the IDENT. To show a possible Pre and Post Modification Statement, (MOD. STATE.) of an IDENT an "alpha" suffix is used, A through H. This forms the fourth element of the IDENT. See below at asterisked IDENT *.

TYPICAL EXAMPLES OF IDENT CALL UP

CB1	CIRCUIT BREAKER
AM	DIODE (MISCELLANEOUS ITEM)
DA50P	SHELL -PLUG (No. 50 FOR PANEL DA)
DA50PA *	SHELL -PLUG (No. 50 FOR PANEL DA) WITH MOD. STATE.
DA50R	SHELL -RECEPTACLE (No. 50 FOR PANEL DA)
DA50RA *	SHELL -RECEPTACLE (No. 50 FOR PANEL DA) WITH MOD. STATE.
P1-WX-P	PLUG (IDENTED 'P1' ON PANEL WX)
P1-WX-R	RECEPTACLE (IDENTED 'P1' ON PANEL WX)
CB5-DAD	CIRCUIT BREAKER ON PANEL DA, SUB PANEL D
L-WA	SAME IDENT USED ON DIFFERENT PANEL LOCATION (WA)
L-WB	SAME IDENT USED ON DIFFERENT PANEL LOCATION (WB)
Y12-DAB	JUNCTION MODULE ON PANEL DA, SUB PANEL B
J115P	PLUG (AVIONICS)
J115R	RECEPTACLE (AVIONICS)
M490	EQUIPMENT - (AVIONICS)
M500	EQUIPMENT - (AVIONICS)
A175	EQUIPMENT - I.E. COMPUTER (AVIONICS)
A175P1	CONNECTOR - (AVIONICS EQUIPMENT)

INSTRUCTIONS TO LOCATE A PART IN THE DETAILED PARTS LIST

Raytheon Aircraft

HAWKER 800XP WIRING PARTS CATALOG

2 CHAPTER 21 - AIR CONDITIONING

TABLE OF CONTENTS

SUBJECT	CHAPTER SECTION UNIT	FIGURE	EFFECT
DISTRIBUTION	21-20-00		
ROOF/FLOOR VALVE AND RECIRCULATING FAN	21-20-10	3	

4

3

MASTER

Printed in England

Raytheon Aircraft

HAWKER 800XP WIRING PARTS CATALOG

IDENT CH-SECT-UNIT-FIG	PART NUMBER
B130-DAD	
24-50-05 08	SPARE
24-50-05 09	483TCG11J25-3A
24-50-05 11	483TCG11J25-3A
24-50-05 12	483TCG11J25-3A
24-50-05 14	483TCG11J25-3A
24-50-05 15	483TCG11J25-3A
24-50-05 16	483TCG11J25-3A
24-50-05 17	483TCG11J25-3A
24-50-05 18	483TCG11J25-3A
24-50-05 19	483TCG11J25-3A
24-50-05 20	483TCG11J25-3A
B131-DAD	
21-20-10 03	483TCG11J25-5A
24-50-05 08	483TCG11J25-5A
24-50-05 09	483TCG11J25-5A
24-50-05 11	483TCG11J25-5A
24-50-05 12	483TCG11J25-5A
24-50-05 14	483TCG11J25-5A
24-50-05 15	483TCG11J25-5A
24-50-05 16	483TCG11J25-5A
24-50-05 17	483TCG11J25-5A
24-50-05 18	483TCG11J25-5A
24-50-05 19	483TCG11J25-5A
24-50-05 20	483TCG11J25-5A
B132-DAD	
24-50-05 19	25-8NF2217-15
24-50-05 20	25-8NF2217-15
24-50-05 16	25-8NF2217-15A
24-50-05 17	25-8NF2217-15A
24-50-05 18	25-8NF2217-15A
B132-DAD	
R 21-20-10 03	25-8NF2217-15
R 24-50-05 08	25-8NF2217-15
R 24-50-05 09	25-8NF2217-15
R 24-50-05 11	25-8NF2217-15
R 24-50-05 12	25-8NF2217-15
R 24-50-05 14	25-8NF2217-15
R 24-50-05 15	25-8NF2217-15
B133-DAD	
24-50-07 59	25-8NF2217-20
24-50-07 61	25-8NF2217-20
24-50-07 64	25-8NF2217-20
24-50-07 65	25-8NF2217-20
24-50-07 69	25-8NF2217-20
24-50-07 70	25-8NF2217-20
R 24-50-07 71	25-8NF2217-20
25-40-10 07	25-8NF2217-20
25-40-10 08	25-8NF2217-20
25-40-10 09	25-8NF2217-20
25-40-10 11	25-8NF2217-20

IDENT CH-SECT-UNIT-FIG	PART NUMBER
B133-DAD	
25-40-10 12	25-8NF2217-20
25-40-10 13	25-8NF2217-20
25-40-10 14	25-8NF2217-20
25-40-10 15	25-8NF2217-20
25-40-10 16	25-8NF2217-20
25-40-10 18	25-8NF2217-20
R 25-40-10 19	25-8NF2217-20
24-50-07 47	25-8NF2217-20A
24-50-07 48	25-8NF2217-20A
24-50-07 49	25-8NF2217-20A
24-50-07 50	25-8NF2217-20A
24-50-07 51	25-8NF2217-20A
24-50-07 52	25-8NF2217-20A
24-50-07 54	25-8NF2217-20A
24-50-07 55	25-8NF2217-20A
24-50-07 56	25-8NF2217-20A
24-50-07 57	25-8NF2217-20A
24-50-07 58	25-8NF2217-20A
24-50-07 60	25-8NF2217-20A
24-50-07 62	25-8NF2217-20A
24-50-07 66	25-8NF2217-20A
24-50-07 65	483-96TCK14-20A
B133-DAD	
R 24-50-07 32	25-8NF2217-20
R 24-50-07 33	25-8NF2217-20
R 24-50-07 37	25-8NF2217-20
R 24-50-07 40	25-8NF2217-20
R 24-50-07 41	25-8NF2217-20
R 24-50-07 42	25-8NF2217-20
R 24-50-07 46	25-8NF2217-20
B134-DAD	
24-50-07 59	25-8NF2217-20
24-50-07 61	25-8NF2217-20
24-50-07 64	25-8NF2217-20
24-50-07 65	25-8NF2217-20
24-50-07 69	25-8NF2217-20
24-50-07 70	25-8NF2217-20
R 24-50-07 71	25-8NF2217-20
25-40-10 07	25-8NF2217-20
25-40-10 08	25-8NF2217-20
25-40-10 09	25-8NF2217-20
25-40-10 11	25-8NF2217-20
25-40-10 12	25-8NF2217-20
25-40-10 13	25-8NF2217-20
25-40-10 14	25-8NF2217-20
25-40-10 15	25-8NF2217-20
25-40-10 16	25-8NF2217-20
25-40-10 18	25-8NF2217-20
R 25-40-10 19	25-8NF2217-20
24-50-07 47	25-8NF2217-20A

1

MASTER

Printed in England

ELECTRICAL IDENT INDEX
PAGE 56
MAR 15/96

M50037

THE PART NUMBER IS KNOWN

1 Find part number in Numerical Index. Note Chapter, Section, Unit, Figure and Item number.

THE PART NUMBER IS UNKNOWN

2 Turn to Table of Contents in the desired chapter.

3 Refer to main group in which part should be listed.

4 Figures are listed in alphabetical order by main noun. Find title in which the part should be shown. Note section, unit and figure number.

SAMPLE PAGE

M6976_0
HA00F
018481AA

INSTRUCTIONS TO LOCATE A PART IN THE DETAILED PARTS LIST (Continued)

Raytheon Aircraft

HAWKER 800XP WIRING PARTS CATALOG

5

PANEL DA

SUB PANEL D 5

Raytheon Aircraft

HAWKER 800XP WIRING PARTS CATALOG

FIG. ITEM	PART NUMBER	1234567 NOMENCLATURE	EFFECT FROM TO	UNITS PER ASSY
		ROOF/FLOOR VALVE AND RECIRCULATING FAN	091999	
	25-8NA5-274	WIRING DIAGRAM- (MOD 253149C)		RF
AD-CC	2TP1-10	.SWITCH- (VK6596) (PRE MOD 253210A)	091116	1
AD-CC	2TP1-10M	.SWITCH- (VK6596) (MOD 253210A)	091999	1
5 B131-DAD	483TCG11J25-5A	.CIRCUIT BREAKER-5A (VU0091)		1
R B132-DAD	25-8NF2217-15	.CIRCUIT BREAKER-15		1
CC1-P	BAEREF000003123	.CONNECTOR-SOCKET (6027-20-41SNCONDB) (VK4161)		1
CC1-R	6026-20-41PN	.CONNECTOR-PLUG (VK4161) (OPT 6026-20-41PNC8 (VK0316)) (OPT 6026-20-41CONDB (VK1793)) (OPT 6026-20-41CONDI (VK1100)) (USED WITH BACKSHELL: 602GB129-20-1 (VK1100) (OPT GTR62-20NACS1 (VU0419))		1
CG11-P	MTCR16104P	.CONNECTOR-PIN (VK1010)		1
CG11-R	MTCR10104S	.CONNECTOR-SOCKET (VK1010)		1
R CG7-P	MTC100YH2-009	.SHELL-PLUG (VK1010) (USED WITH WAFERS: TYPE A, MTC100KT2-1101 TYPE B, MTC100KT2-1102)		1
R CG7-P	MTC100YH2-009	.SHELL-PLUG (VK1010) (USED WITH INSERTS: PRIMARY MTC100YC1-001 SECONDARY MTC100YC1-002) (MOD 253252A)		1
R CG7-R	MTC100YH2-010	.SHELL-RECEPTACLE (VK1010) (USED WITH WAFERS: TYPE A, MTC100KT2-1103 TYPE B, MTC100KT2-1104)		1

MISSING ITEM NO. NOT APPLICABLE

- ITEM NOT ILLUSTRATED

5 21-20-10-03

MASTER

Printed in England

PAGE 1

MAR 15/96

M50040

REPORT ANY ERROR ON THIS DRAWING TO THE G.O.

COMPUTER PRODUCED DRAWING

© BRITISH AEROSPACE P.L.C. 1996 ALL RIGHTS RESERVED

25-8NA5-274

M50042

21-20-10-03

PAGE 0

NOV 30/94

Printed in England

5 Turn to chapter and figure and locate part on the illustration or in the parts list by the item number.

SAMPLE PAGE

M6977_0
HA00F
018482AA

EFFECTIVITY

The Hawker 800 Wiring Parts Catalog (WPC) is a "customized" manual extracted from the Hawker 800 series master database. The WPC contains all maintenance significant part numbers for Basic Modification of the airplane. In addition, S.O.O. S.S. (Special Order Only Stock Supply) modifications to the airplane are generally included.

The WPC also reflects the Basic modification configuration of the airplane delivered to a completion center. It does not reflect the Supplementary Type Certificate (STC) modifications fitted by the completion center. To order these spares, the operator/customer should refer to any supplement provided by the completion center.

Customers WPC Supplement, if applicable, is a "customized" manual extracted from the Hawker 800 WPC database. It reflects the delivery configuration of the airplane as defined by production drawings and confirmed by the airplane Log Book. Post delivery changes in the form of Modifications are generally shown if this information is communicated back to Raytheon Aircraft Company. Each Customer Supplement is identified on the bottom left hand corner of text pages with either a fleet abbreviation or construction number.

Each airplane is given an Effectivity Print Code of the last three digits of the airplane construction number.

For Example:

Construction Number	Effectivity Print Code
258091	091
258195	195

A page numbering system is used which permits the assignment of page numbers by electronic data processing. In the Detailed Parts List (DPL) each figure contains its own page numbering system beginning with page zero (0). Any parts list change to a figure will generally cause issuance of only those DPL pages affected by the change.

The effectivity, as defined by the airplane Log Book, is indicated by Customer Airplane Codes in the "EFFECT FROM TO" column. They identify the airplane which may use the part shown.

Every figure in the Wiring Parts Catalog is controlled by a Modification, this is annotated in the text against the subject Wiring Diagram. The Wiring Diagram in turn may be controlled by another Modification, therefore, making it "Pre Mod". The effectivity shown will be for the airplane covered by the subject Modification/s. Some part numbers may be affected by a Mod. State. This is highlighted by an alpha variant in the Electrical Ident field and the Modification annotated in the Ident text. The effectivity quoted will be for the airplane affected by the Mod. State., in turn this effectivity is controlled by that of the figure.

SPARES CONDITION CODES

A prefix letter "S" to the part number denotes that the item is in a special condition to meet spares requirements. The condition of the item is shown in the nomenclature by the letters "SC/" plus the code for the item (see table below). The letters "C" or "R" in a similar position are for parts required on concessions and repair schemes respectively.

	CODE A	Drill on assembly.
	CODE B	Ream on assembly.
	CODE C	Trim on assembly.
	CODE D	Spot face on assembly.
*	CODE E	Partially assembled.
	CODE F	Open holes on assembly.
	CODE G	Line ream on assembly.
	CODE H	Countersink on assembly.
	CODE J	Counterbore on assembly.
	CODE K	Fettled on assembly.
	CODE L	Restore finish.
	CODE M	Dimple on assembly.
	CODE N	Tap on assembly.
	CODE P	Upholster on assembly.
	CODE Q	Test on assembly.
	CODE R	Complete assembly.

* Partially assembled relates to the supply of loose items, i.e. Rivets, Anchor Nuts, Cables and Fittings, Cleats etc. for fitting on assembly.

The special condition, in which the part is to be supplied is shown by the letter "S" in front of the part number and the letters "SC/" plus the code for the item after the description (see table above). The letters "SC" and code will be upper case.

e.g.: S25-8FC119-15A LEADING EDGE-SC/C.E

WARNING

This wiring parts catalog has but one function; to facilitate ordering replacement parts for the MODEL 800 airplane. Illustrations in this catalog are to be used only as aids in identifying parts and should not be used as a maintenance reference for reassembly.

Use only genuine Raytheon Aircraft Company parts, or Raytheon Aircraft Company approved parts obtained from Raytheon Aircraft Company approved sources, in connection with the maintenance and repair of Raytheon airplanes. Genuine Raytheon Aircraft Company parts are produced and inspected under rigorous procedures to insure airworthiness and suitability for use in Raytheon airplane applications. Parts purchased

from sources other than Raytheon Aircraft Company, even through outwardly identical in appearance may not have had the required tests and inspections performed, may be different in fabrication techniques and materials, and may be dangerous when installed in an airplane.

Salvaged airplane parts obtained from non-Raytheon Aircraft Company approved sources, or parts, components, or structural assemblies, the service history of which is unknown or cannot be authenticated, may have been subjected to unacceptable stresses or temperatures or have other hidden damage, not discernible through routine visual or usual nondestructive testing techniques. This may render the part, component or structural assembly, even though originally manufactured by Raytheon Aircraft Company, unsuitable and unsafe for airplane use.

Raytheon Aircraft Company expressly disclaims any responsibility for malfunctions, failures, damage or injury caused by use of non-Raytheon Aircraft Company approved parts.

SERVICE BULLETIN / MODIFICATION STATEMENT

THE FOLLOWING IS A LIST OF RAYTHEON AIRCRAFT COMPANY 125 AND/OR HAWKER SERVICE BULLETINS / MODIFICATIONS THAT HAVE BEEN INCORPORATED INTO THIS MANUAL.

SB/MOD NO.	SB/MOD NO.
25A095A	257670A
25A096A	257671C
25A096B	258921E
25A529A	259163C
25A558A	259163D
25A672A	259258B
25A684B	259283A
25A755C	259283C
25E127A	259404B
25F505A	259404C
25F737C	259429B
25F878A	259434B
25F973A	259479A
252994C	259499A
253057A	259591A
253084A	259696A
253090B	259715A
253135A	259742A
253149C	259747A
253159A	259762B
253181A	259782A
253181B	259842A
253185A	259861A
253187A	259890A
253189A	259896A
253191A	
253192A	
253200H	
253201B	
253210A	
253214A	
253215B	
253247A	
253252A	
253256A	
253261A	
253287A	
253293A	
253295A	
253523A	
253529B	
253532A	
253547A	
253552A	
253561D	

V+0016	ACTIVE ELECTRONICS LTD., DUKE ST., HIGH WYCOMBE,BUCKS.ENGLAND.
V+0070	AEROLUX LTD., CHORLEY RD., BLACKPOOL, LANCS,FY37XQ,ENGLAND.
V+0213	AMALGAMATED WIRELESS (AUSTRALIA) LTD PO BOX 218,LEICHHARDT,NSW AUSTRALIA.
V+0225	SEE U5114.
V+0315	ASINC INC-AIRSHOW 100 17691A MITCHELL NORTH, IRVINE, CALIFORNIA 9271,USA.
V+0488	BAKER GREAT WEST ROAD, ISLEWORTH,MIDDLESEX (NO LONGER IN BUSINESS SEE MANN AVIATION +2195)
V+0656	BRITISH SONCEBOZ CO LTD VICTORIA ROAD, RUISLIP,MIDDLESEX,ENGLAND.
V+0862	CANON (UK) LTD WADDON HOUSE,STAFFORD ROAD, CROYDON CR9 4DD,ENGLAND.
V+1074	HUNTING AVIATION INFLIGHT SYSTEMS ARUNDEL ROAD,UXBRIDGE, MIDDLESEX UB8 2RR,ENGLAND. (FORMERLY CURTIS & GREEN)
V+1085	CROWN LIGHTING CORP SEE V12512
V+1131	SEE 63131
V+1251	SEE V70898 -WAS V+1251,VK0400 AND V10327
V+1938	JET AVIATION, CH4030 BASEL AIRPORT, P.O.BOX 66, SWITZERLAND.
V+2011	LEISURE ACCESSORIES LTD BRITANNIA WORKS,HURRICANE WAY, AIRPORT INDUSTRIAL ESTATE, NORWICH,NR6 6EY ENGLAND.
V+2195	MANN AVIONICS LIMITED FAIROAKS AIRPORT, CHOBHAM,WOKING, SURREY. GU24 8HX ENGLAND TEL : (01276) 857444 FAX : (01276) 857510

V+2510	NE TECHNOLOGY LTD., (INSTRUMENTATION DIVISION) SPUR ROAD BUILDING 608, NORTH FELTHAM TRADING ESTATE FELTHAM,MIDDX.TW14 OTD.
V+2967	POSITRONICS INDUSTRIES LTD., ACORN HOUSE, 43,LONGSHOT ROAD, BRACKNELL,BERKS.RG12 1RL.-
V+3650	UNC ACCESSORY OVERHAUL GROUP 3000 SW 4TH STREET FT. LAUDERDALE FL. 33315 USA
VD0080	LRE RELAIS & ELECTRONIK GMBH LINPRUM STRASSE 11, 8000 MUNCHEN 2,WEST GERMANY.
VF0010	S.E.L.A. LABORATOIRE 63 BIS, ROUTE DE TARBES B.P. 1 65501 VIC-EN-BIGORRE CEDEX FRANCE TEL: 33 (0) 5 62 31 81 00 FAX: 33 (0) 5 62 31 81 01
VF6306	SEE F9111.(THIS WAS FORMALY UNDER SFENA)
VK0000	DEFENCE CIDIFICATION AUTHORITY 1CKENTIGERN HOUSE 65 BROWN ST GLASGOW G2 8EX ENGLAND
VK0004	MULLARD LTD CENTRAL TECHNICAL SERVICES, NEW ROAD MITCHAM, SURREY CR4 4XY ENGLAND.
VK0023	LUCAS AEROSPACE INDUSTRIAL GROUP ROTAX PRECISION PRODUCTS, MARYLANDS AVENUE,HEMEL HEMPSTEAD, HERTS HP2 4SP ENGLAND. WAS V98768
VK0064	WELWYN ELECTRIC LTD TRADING ESTATE,BEDLINGTON, NORTHUMBERLAND,NE22 7AA.ENGLAND. - WAS V+3881 -
VK0100	MEGGITT AVIONICS, UNIT 234,TICHFIELD PARK BARNES WALLIS ROAD, FAREHAM,HANTS.PO15 5TH, ENGLAND. (FORMERLY NEGRETTI AVIATION, AND WAS ALSO V13278)
VK0136	CANNING W & CO LTD GREAT HAMPTON STREET, BIRMINGHAM,B18 6AS ENGLAND.
VK0142	SALFORD ELECTRICAL INSTRUMENTS LTD PO BOX 3, BARTON LANE, ECCLES, MANCHESTER, M30 OHL ENGLAND. WAS V89670
VK0268	COSSOR ELECTRONICS LTD THE PINNACLES, HARLOW,ESSEX CM19 5BB ENGLAND.
VK0279	GEC AEROSPACE, DOWNLEY RD., HAVANT,HANTS. PO9 2NW,ENGLAND. - WAS V+0400 AND VA0400 -

VK0310	APV(HVAC) LIMITED 12 LAMB HILL QUADRANT SCOTLAND STREET TRADING ESTATE KINNING PARK GLASGOW G41-1SB (FORMERLY APV HALL LTD)
VK0316	ITT CANNON(GB)LTD JAYS CLOSE,VIABLES ESTATE, BASINGSTOKE,HANTS.RG22 4BW. ENGLAND. - WAS V+0860, VK1179 AND V15136 -
VK0371	SAFT NIFE LTD CASTLE WORKS,STATION ROAD, HAMPTON MIDDX TW12 2BY ENGLAND. - WAS V+0822 -
VK0386	CLEMENT CLARKE INTERNATIONAL LTD AIRMED HOUSE,EDINBURGH WAY, HARLOW,ESSEX CM20 2ED ENGLAND. -WAS V+0160-
VK0400	SEE +1251
VK0414	NE TECHNOLOGY LTD., INSTRUMENT DIVISION, SPUR RD., FELTHAM,MIDDX. TW14 0TD,ENGLAND.
VK0422	T C CENTRONICS LTD KING HENRY'S DRIVE,NEW ADDINGTON, SURREY,CR9 0BG.ENGLAND.
VK0533	HELLA AUTOMOBILE EQUIPMENT LTD DAVENTRY ROAD,INDUSTRIAL ESTATE, BANBURY,OXON OX16 7JU,ENGLAND.
VK0574	ULTRA ELECTRONICS (COMPONENTS) LTD FASSETTS ROAD, LOUDWATER,HIGH WYCOMBE, BUCKS,HP10 9UT ENGLAND. - WAS V+3820 AND VA3820
VK0588	CORNING LTD ELECTROSIL DIVISION, PO BOX 37,PALLION INDUSTRIAL ESTATE, SUNDERLAND,TYNE AND WEAR,SR4 6SO ENGLAND.
VK0652	ROCKWELL INTERNATIONAL HEATHROW HOUSE,BATH ROAD HOUNSLOW,MIDSX.TW5 9QH ENGLAND. SEE ALSO 4V792 AND V+1020, WAS VA1020.
VK0653	ULTRA ELECTRONIS., KINGSDITCH LANE, CHELTENHAM,GLOS.GL51 9PG. ENGLAND. - WAS V10345 - (FORMERLY DOWTY ELECTRICS LTD)
VK0654	DOWTY AEROSPACE GLOUCESTER LTD., PRODUCT SUPPORT DIVISION, CHELTENHAM ROAD EAST GLOUCESTER,GL2 9QH,ENGLAND. WAS 10811
VK0657	G.E.C.FUSEGEAR LTD EAST LANCASHIRE ROAD, LIVERPOOL L10 5HB,ENGLAND.
VK0665	GEC TELECOMMUNICATIONS LTD PO BOX 53,COVENTRY CV3 1HJ,ENGLAND.

VK0672	AEROSPACE COMPOSITE TECHNOLOGIES. ENGINEERING HEATING SYSTEMS GROUP, THE AIRPORT, LUTON, BEDFORDSHIRE LU2 9NO,ENGLAND. (FORMERLY LUCAS AEROSPACE,LUTON)
VK0673	PAGE AEROSPACE LTD PAGE WORKS,FORGE LANE, SUNBURY-ON-THAMES,MIDDLESEX TW16 6EQ,ENGLAND. -FORMERLY PAGE ENGINEERING CO LTD- - WAS V+2720 AND V+2750 -
VK0686	TEDDINGTON BELLOWS LTD TEILO WORKS, PONTARDULIS,SWANSEA, WEST GLAMORGAN SA4 1RP,WALES. - WAS V10891 -
VK0690	TEC ELECTRICAL COMPONENTS LTD., PROGRESS WAY, ENFIELD,MIDDLESEX EN1 1UZ,ENGLAND. -FORMERLY THORN ELECTRICAL COMPONENTS LTD- - WAS VA3538 AND V+3538
VK0802	SMITHS INDUSTRIES LTD AVIATION DIVISION, AVIONICS ENGINE & FUEL MANAGEMENT SYSTEMS, WINCHESTER ROAD,BASINGSTOKE, HANTS, RG22 6HP ENGLAND.
VK1010	RAYCHEM LTD FARADAY ROAD, DORCAN,SWINDON,SN3 5HH ENGLAND. - WAS V+3016 -
VK1021	SPECTROL RELIANCE LTD GARRARDS WAY, SWINDON,SN3 3HY, ENGLAND, - WAS V+3261 -
VK1037	DUNLOP AVIATION EQUIPMENT,WHEEL & BRAKE, SYSTEMS DIVISION, HOLBROOK LANE, FOLESHILL, COVENTRY,CV6 4AA,ENGLAND. - WAS V16646 -
VK1100	AMPHENOL LTD THANET WAY, WHITSTABLE,KENT CT5 3JF ENGLAND. - WAS V+0240 -
VK1152	WESTINGHOUSE BRAKE & SIGNAL CO LTD RECTIFIER EQUIPMENT ENGINEERING DEPT., FOUNDRY LANE,CHIPPENHAM,WILTS.SN15 1JD
VK1154	OTTERMILL CHILTON LTD CHURCH WAY,HUNGERFORD, BERKS,RG17 0JW ENGLAND. - WAS V+2703 -
VK1316	BOWTHORPE HELLERMAN LTD HELLERMAN DEUTSCH DIVISION, IMBERHORNE WAY,EAST GRINSTEAD, WEST SUSSEX RH19 1RL ENGLAND. ORDER FROM K1793 - WAS V+1719 -
VK1382	RELIANCE CORDS AND CABLES LTD STAFFA ROAD, LONDON,E10 7PU ENGLAND. - WAS V+3040 -
VK1423	PLESSEY CO LTD (AVIONICS-ILFORD) AVIONICS AND COMMUNICATIONS DIV, VICARAGE LANE, ILFORD,ESSEX IG1 4AQ ENGLAND.

VK1474	PENNY & GILES DATA RECORDERS LTD., MUDEFORD, CHRISTCHURCH, DORSET,BH23 4AT, ENGLAND.
VK1536	KIDDE-GRAVINER LTD POYLE ROAD,COLNBROOK, SLOUGH,BERKS,SL3 OHB ENGLAND. - WAS V+1960, VU1936,VA1936 AND V03019 -
VK1580	ELECTRO ACOUSTIC INDUSTRIES LTD BENNETT STREET, BRIDGEND INDUSTRIAL ESTATE, BRIDGEND,GLAM.CF31 3SH. ENGLAND.
VK1619	ELECTRO-VOICE PRODUCTS MAPLE CROSS INDUSTRIAL ESTATE, DENHAM WAY, RICKMANSWORTH, HERTS,WD3 2RX ENGLAND.
VK1636	AMP OF GREAT BRITAIN LTD TERMINAL HOUSE,MERION AVENUE, STANMORE,MIDDX,HA7 4RS ENGLAND. -WAS V+0140,VA0140 AND V09769
VK1659	GEC ELECTRICAL DIV. ABBEY WORKS TITCHFIELD FAREHAM HANTS PO14 4QA - WAS V+2928 - WAS PLESSEY AEROSPACE LTD.
VK1672	ITT COMPONENTS,GROUP EUROPE SOUTH DENES,GREAT YARMOUTH, NORFOLK,NR30 3PX ENGLAND. - WAS V03545 AND V10375 -
VK1676	SEE K5294
VK1793	HELLERMAN ELECTRICS PENNYCROSS CLOSE, PLYMOUTH,DEVON,PL2 3NX ENGLAND. - WAS VA1719 AND VK2798 -
VK1823	SEE K5294
VK2437	BRITISH AEROSPACE CIVIL AIRCRAFT, CHESTER ROAD, BROUGHTON,CHESTER.CH4 ODR.
VK2472	D C ELECTRICALS BRISTOL ROAD, BRIDGEWATER,SOMT. TA64AR.
VK2523	MARCONI ELECTRONIC SYSTEMS DIVISION BROWNS LANE THE AIRPORT PORTSMOUTH HANTS PO3 5PH (FOR GEC AEROSPACE SEE K7033) - FORMERLY GEC-PLESSY AVIONICS DIVISION OF MARCONI LTD.-
VK2617	HIGH TEMPERATURE ENGINEERS LTD BROOK ROAD, WIMBOURNE DORSET 8H21 2BJ - COMPANY TRADING NAME: FR-HITEMP, NOW U1918 - - WAS K2617 AND +1802 -
VK2760	FARNELL INSTRUMENTS, LTD., PO BOX,SANDBACH WAY, WETHERBY,LS22 4DH.ENGLAND.
VK2962	BAXTER WOODHOUSE AND TAYLOR LTD LONDON ROAD, ADLINGTON, MACCLESFIELD,CHESHIRE SK10 4NJ. ENGLAND. - WAS V+0500 AND VA0500 -

VK3056	INERTIA SWITCH LTD BANCHORY WORKS,HARDINGS LANE, HARTLEY WHITNEY,BASINGSTOKE, HANTS,RG27 8QA.ENGLAND,
VK3105	CAMBION ELECTRONIC PRODUCTS LTD OLD MILL LANE,CASTLETON, SHEFFIELD,S30 2WR ENGLAND. - WAS VA0829 -
VK3135	UNITED MOULDERS LTD VANN LANE,FERNHURST, HASLEMERE, SURREY,GU27 3NX ENGLAND. - WAS VA3655 AND V+3655 -
VK3753	CGS RESISTANCE CO LTD MARSH LANE,LYMINGTON, HANTS,S04 97Q ENGLAND.
VK3833	HUNTING AVIONICS LTD HUNTAVIA HOUSE,420, BATH ROAD, LONGFORD,WEST DRAYTON, MIDDLESEX,UB7 OLL,ENGLAND. (FORMERLY FIELDTECH HEATHROW LTD)
VK3954	DARLINGTON INSULATION CO LTD SCOTSWOOD ROAD, NEWCASTLE ON TYNE NE15 6YL ENGLAND.
VK4148	ADSUM LTD., UNIT 2,KILN ROAD, WICKHAM ROAD, FAREHAM,PO16 7HZ.ENGLAND.
VK4161	SOURIAU / FRAMATOME CONNECTORS UK CONNECTOR HOUSE - EYNCOURT ROAD WOODSIDE ESTATE - DUNSTABLE BEDS LU5 4ST - ENGLAND.
VK4184	ELECTROSIL DIVISION CORNING LTD PO BOX 37,PALLION TRADING ESTATE, SUNDERLAND,TYNE AND WEAR SR4 6SU ENGLAND. - WAS V+1237 -
VK4265	SEE K1672
VK4358	LUCAS AEROSPACE LTD ELECTRICAL DIVISION,GENERATING SYSTEMS, MAYLANDS AVENUE,HEMEL HEMPSTEAD, HERTS,HP2 4SP ENGLAND.
VK4383	DATEK ENGINEERING LTD., UNITS 3 & 4, BRYNBERTH INDUSTRIAL ESTATE, . RHAYADER,POWYS,LD6 5EN,WALES. - WAS VA1104 -
VK5081	HIGHLAND ELECTRONICS LTD HILLEND,INDUSTRIAL ESTATE, DUNFERMLINE,FIFE,SCOTLAND KY11 5JT. - WAS V+1804 -
VK5288	AIRCRAFT UNIT ENGINEERING CO.LTD. 10, HORATIUS WAY, CROYDON,CRO 4RU,ENGLAND. - WAS VA0150 -
VK5294	SMITHS INDUSTRIES PLC AEROSPACE AND DEFENCE SYSTEMS COMPANY PRODUCT SUPPORT DEPARTMENT EVESHAM ROAD BISHOPS CLEEVE CHELTENHAM GLOS GL52 4SF - WAS V10849 -

VK5459	ROSEMOUNT LIMITED, HEATH PLACE, BOGNOR REGIS, W.SUSSEX,PO22 9SH.ENGLAND. - WAS VA3102 -
VK5519	MOTOROLA SEMICONDUCTORS LTD YORK HOUSE,EMPIRE WAY, WEMBLEY,MIDDX,HA9 OPR ENGLAND.
VK5533	HUGHES MICROELECTRONICS LTD QUEENSWAY,FULLERTON ROAD, GLENROTHES,FIFE,KY7 5PY SCOTLAND. - WAS VA1251 -
VK5545	AVEL-LINDBERG LTD ARISDALE AVENUE SOUTH OCKENDON ESSEX RM15 5ST ENGLAND
VK5595	BARDOLPH & PARTNERS LTD., SILVERTHORNE ROAD, LODON SW8 3HE.
VK5688	THORN LIGHTING LTD STANDARDS ENGINEERING DEPT, MELTON ROAD,LEICESTER, LE8 OAN ENGLAND. - WAS VA0670 -
VK5690	GEORGE W.KING LTD., PO BOX 18, FAIRVIEW ROAD, STEVENAGE,HERTS.SG1 2AA.
VK5743	BOURNS(TRIMPOT)LTD WOODFORD HOUSE,27,HIGH STREET, HOUNSLOW.MIDDX.TW3 1TE,ENGLAND.
VK5788	AEROSPACE SYSTEMS & TECHNOLOGIES, NUMBER ONE INDUSTRIAL ESTATE CONSETT, CO.DURHAM. DH8 6SR,ENGLAND. - WAS VA3571 AND V+3571 - (WAS FORMERLY TKS LTD)
VK5835	SUHNER ELECTRONICS LTD TELFORD ROAD,BICESTER, OXON OX6 OLA,ENGLAND.
VK6265	L R E RELAYS & ELECTRONICS LTD THE DEAN,ALRESFORD, HANTS,SO24 9BH ENGLAND. - WAS V+1980 AND V+1982 -
VK6491	AERCO AVIATION ELEC.CO., (AVIATION ELECTRICAL & RADIO CO.LTD) 12 NORTH PARADE, HORSHAM,W.SUSSEX,RH12 2DB.ENGLAND.
VK6596	HONEYWELL LTD MICRO SWITCH P KEYBOARD DIVISION, HONEYWELL HOUSE,CHARLES SQUARE, BRACKNELL,BERKS,RG12 1EB ENGLAND. - WAS V+1820, V+1830 AND VK0174 -
VK6686	INTERTECHNIQUE AEROSPACE UNIT 1 FISHPONDS ROAD WOKINGHAM BERKS RG11 2QJ (SEE VF0553 FOR INTERTECHNIQUE SA FRANCE)
VK7033	GEC AEROSPACE LTD ABBEY WORKS SOUTHAMPTON ROAD TITCHFIELD FAREHAM HANTS PO14 4QA (FOR GEC PLESSEY SEE K2523)

VK7178	ITW ELECTRONICS EUROPA DIV.OF ITW LTD., NORWAY RD., HILSEA INDUSTRIAL ESTATE, PORTSMOUTH,PO3 5HT ENGLAND. - WAS V+2018 -
VK7269	LYONS CLAUDE CONTROLS LTD (BERCO DIVISION) BAIRD ROAD, ENFIELD,MIDDX,EN1 1UA ENGLAND. - WAS V09921 -
VK7391	SUNSTRAND AEROSPACE CORPORATION, KINGFISHER HOUSE, 160-162 HIGH ST., EGHAM,SURREY TW20 9HP, ENGLAND.
VK7437	FARNELL ELECTRONIC COMPONENTS,LTD., CANAL ROAD, LEEDS,LS12 2TD.
VK7584	PHILIPS ELECTRONIC & ASSOCIATED INDUSTRIES LTD ARUNDEL GREAT COURT, 8 ARUNDEL STREET, LONDON,WC2R 3DT ENGLAND. - WAS V11746 -
VK7761	MEASUREMENT LIMITED BERRINGTON ROAD SYDENHAM INDUSTRIAL ESTATE, LEAMINGTON SPA,WARWICKSHIRE,CV31 1QN ENGLAND.
VK7776	AIRSCREW-HOWDEN LTD UNIT 2,111 WINDMILL ROAD, SUNBURY ON THAMES,MIDDLESEX TW16 7EF,ENGLAND.
VK8080	KAISER-ROYLYN PRODUCTS DISTRIBUTORS & MANUFACTURERS: ALAN BRADLEY ENGINEERING CO. (GOSPORT) LTD 5 MURRILLS ESTATE, EAST STREET,PORTCHESTER, HAMPSHIRE PO16 3RD,ENGLAND.
VK8165	INTERTECHNIQUE (AEROSPACE) LTD FISHPONDS ROAD, WORKINGHAM,BERKS,RG11 2QJ ENGLAND.
VK9034	LEMO /UK /LTD 12 NORTH STREET, WORTHING, SUSSEX BN11 1DU. U.K.
VTOW01	TOWNSEND COATES LINGFORD ROAD LEICESTER
VU0026	GIRLING LTD KINGS RD,TYSELEY, BIRMINGHAM,B11 2AH ENGLAND.
VU0091	E-T-A CIRCUIT BREAKERS (UK) LTD RYCOTE PLACE,22 CAMBRIDGE STREET, AYLESBURY,BUCKS HP20 1RS ENGLAND.
VU0154	BELLING AND LEE LTD 540 GREAT CAMBRIDGE ROAD, ENFIELD,MIDDLESEX,EN1 3RY ENGLAND. - WAS V03544 -
VU0178	BROWN.S.G.LTD 9 GREYCAINES ROAD ESTATE, BUSHEY MILL LANE, WATFORD, HERTS, ENGLAND. - WAS V09958 - SEE ALSO K3926
VU0231	GRIMES R J (COULSDON) LTD HADLEIGH GARAGES,MARLPIT LANE, COULSDON,SURREY,CR3 2YE ENGLAND.

VU0235	DIAMOND H CONTROLS LTD VULCAN ROAD, NORWICK,NORFOLK,ENGLAND. WAS VA1140
VU0419	GLENAIR (UK) LTD PRIORY WORKS,PRIORY SQUARE, MANSFIELD WOODHOUSE, MANSFIELD,NOTTS,NG19 9LN ENGLAND.
VU0434	EKCO INSTRUMENTS, PRITTLEBROOK INDUSTRIAL ESTATE, SOUTHEND ON SEA,SS2 6PS.ENGLAND.
VU0544	WESTINGHOUSE BRAKE & SIGNAL CO.LTD., SEMICONDUCTOR DIVISION, CHIPPENHAM,WILTS.SN15 1JD. - WAS VA3886 -
VU0801	D.H.BONELLA AND SON LTD THE MOOR,TEWKESBURY ROAD, CHELTENHAM,GLOUCESTER,GL51 9BP ENGLAND.
VU0914	ALLEN-BRADLEY ELECTRONICS LTD PILGRIMS WAY, BEDE INDUSTRIAL ESTATE, JARROW, TYNE AND WEAR,NE32 3EN,ENGLAND.
VU0928	BULGIN A F & CO LTD BYPASS ROAD,BARKING, ESSEX,1G11 OAZ ENGLAND. - WAS V10248 -
VU0938	PARMEKO,LTD., LEICESTER.ENGLAND.
VU0948	SPECTRAL DYNAMICS-UK BRANCH 25 BURY MEAD ROAD, HITCHIN,HERTS,SG5 1RT ENGLAND.
VU1585	HYMATIC ENGINEERING CO LTD BURNT MEADOW ROAD, NORTH MOONS MOAT, REDDITCH,WORCS,B98 9HJ ENGLAND. - WAS VA1126, VK1110 AND V10531 -
VU1588	WESTON AEROSPACE LTD INDICATOR DIVISION, UNIT CP,MOLLISON AVE., BRIMSDOWN, ENFIELD, MIDDLESEX EN3 7NJ, UK. (FORMERLY SCHLUMBERGER INDUSTRIES) SEE ALSO U2148 AND 7A916
VU1608	HOWDEN WADE LIMITED CROWHURST ROAD BRIGHTON EAST SUSSEX BN1 8AJ WAS V+3520 AND VA3520 ENGLAND (FORMERLY THERMAL CONTROLS LTD)
VU1907	CHELTON ELECTROSTATICS LTD FIELDHOUSE LANE, MARLOW, BUCKS,SL7 1LR ENGLAND. - WAS V+0980 AND VA0980 - TEL : 44 + (1628) 472072 FAX : 44 + (1628) 482255
VU1918	FLIGHT REFUELLING LTD BROOK ROAD, WIMBOURNE,DORSET BH21 2BJ ENGLAND - WAS V+1460 ALSO WAS UK4981 STRABOR - - SEE K2617 HTE -
VU1971	ERNEST TURNER ELECTRICAL INSTRUMENTS LTD HIGH WYCOMBE, BUCKS,HP13 6XH ENGLAND. - WAS V03959 -

VU1974	WALTER ELECTRICAL MANUFACTURING CO LTD 249 KENSAL ROAD, LONDON,W10 5DD ENGLAND. - WAS V+3800 -
VU2064	R.W.MUNRO LTD., GILBERT HOUSE 406 RODING LANE SOUTH WOODFORD GREEN ESSEX 1G8 8EY.
VU2255	STOP CHOC LTD BANBURY AVENUE, SLOUGH,BERKS,SL1 4LH ENGLAND.
VU2840	MAPLIN ELECTRONIC SUPPLIES LTD., P O BOX 3, RAYLEIGH,ESSEX.SS6 8LR. ENGLAND.
VU3764	HAWKER ENERGY PRODUCTS,LTD., STEPHEN ST., NEWPORT, GWENT,NP9 OXJ,WALES.
VU4014	HARMAN AUDIO U.K. LTD UNIT 1B MILL STREET SLOUGH BERKS SL2 5DD
VU5114	A.M.C.INDUSTRIES,LTD., CLARKE ST., POULTON-LE-FYLDE, LANCS.FY6 8JW.ENGLAND. -WAS V+0225-
VOBYW8	ALLIED SIGNAL:GRIMES AEROSPACE CORP. PRODUCT SUPPORT DIVISION, 240 TWAIN AVENUE, URBANA,OHIO,43078 USA. WAS MIDLAND ROSS. WAS FL AEROSPACE CORP -WAS V72914-
VOCHW3	DB SYSTEMS,INC 2847 152ND AVE NE REDMOND, WA.98052 425-883-9910
VOEH91	UNIVERSAL AVIONICS 3260 E.LERDO ROAD, TUCSON,ARIZONA,85706,USA. WAS +3682
VOJVB4	SKYLIGHT AVIONIC'S 38629 6TH STREET EAST, PALMDALE , C.A. 93550,
VOKAT4	DELTA FAUCET CO 55 E 111TH STREET INDIANAPOLIS IN 46280 U S A
VOTKU3	AUDIO INTERNATIONAL 7300 INDUSTRY DRIVE N. LITTLE ROCK, AR. 72117
VO0471	DOW-KEY MICROWAVE 1667 WALTER STREET VENTURA, CA 93003-5641
VO0779	AMP INC., 2800 FULLING MILL ROAD PO BOX 3608, MIDDLETOWN,PA 17105-3608
VO1121	ALLEN-BRADLEY CO., 1201 SOUTH 2ND STREET, MILWAUKEE,WISCONSIN 53204,USA. (FORMERLY 04061 , 4B620 , 93511)

V02288	ALLIED CONTROLS, INC., 150 E. AURORA ST., WATERBURY, CT 06708
V02289	HI-G CO.(SUB OF NYTRONICS INC) 101 LOCUST STREET, HARTFORD, CONNECTICUT 06114,USA.
V02660	BUNKER RAMO-ELTRA CORP., AMPHENOL DIV.2801, S.25TH AVENUE, BROADVIEW,IL60153,USA.
V02750	EATON CORP PRESSURE SENSORS 15 DURANT AVE, BETHAL,CT 06801,USA. FORMERLY CONSOLIDATED CONTROLS CORP.
V03025	SEE 89944
V04387	DALE ELECTRONICS INC., COLUMBUS NE 1122 23RD ST PO BOX 609A COLUMBUS NE 68601 - 3632 TEL : 402 564 3131
V05167	PACIFIC SCIENTIFIC HTL/KIN-TECH DIV. 1800 HIGHLAND AVE. DUARTE,CA 91010-2906 USA (FORMERLY HTL ADVANCED TECHNOLOGY DIV.) WAS V33252
V06090	RAYCHEM CORP. 300 CONSTITUTION DRIVE, MENLO PARK,CALIFORNIA 94035,USA.
V06097	HOFFMAN ENGINEERING CORP 183 REAR SOUND BEACH AVE, PO BOX 300,OLD GREENWICH,CT 06870 USA.
V07181	MARATHON POWER TECHNOLOGIES, FLITE-TRONICS PRODUCTS, P.O.BOX 8233, 8301 IMPERIAL DRIVE, WACO.TEXAS,76714-8233,USA. - WAS VA1461 AND V34122
V07217	GARRETT MFG LTD 255 ATWELL DRIVE, REXDALE,ONTARIO M9W 5B8,CANADA.
V07418	SUNBANK ELECTRONICS, INCORPORATED 1740 COMMERCE WAY PASO ROBLES, CALIFORNIA 93446-3620 FORMERLY IN BURBANK, CALIFORNIA
V07639	LELAND ELECTRO SYSTEMS INC 740 EAST NATIONAL ROAD, VANDALIA,OHIO,45377,USA.
V08179	GARRETT-AIRESEARCH, LOS ANGELES, CALIFORNIA,USA. (ORDER FROM 7X000)
V08748	ELDEC CORPORATION, P O BOX 100, LYNNWOOD,WA98046-100 USA. - WAS VA1230 -

V09049	CUSTOM CONTROL SENSORS INC 21111 PLUMMER STREET, CHATSWORTH,CALIFORNIA 91311,USA. -FORMERLY CUSTOM COMPONENT SWITCHES INC-
V09298	CONTROL SWITCHES INC 2907,182ND STREET, REDONDO BEACH,CALIFORNIA 90278,USA.
V09455	LEAR SIEGLER, H.O. KANSON DIVISION, 3333 WEST WARNER AVENUE, SANTA ANA,CALIFORNIA,92904,USA.
V1BU13	ARKANSAS AEROSPACE INC., P.O. BOX 3356, ADAMS FIELD, LITTLE ROCK, ARKANSAS 72203, USA. -WAS V+0306-
V10402	WHELEN ENGINEERING CO. INC., 145 WINTHROP RD., CHESTER,CT.06412,USA.
V10581	MAGNETICO INC., 182 MORRIS AVENUE,. HOLISVILLE,NY11742,USA.
V10639	AVIONIC SPECIALITIES INC. PO BOX 6400,CHARLOTTESVILLE, VIRGINIA 22906,USA. - FORMERLY TELEDYNE AVIONICS -
V10933	AVIONIC INSTRUMENTS INC (R.E.A. INTERNATIONAL) 1414 RANDOLPH AVENUE, PO BOX 488,AVENAL,NEW JERSEY 07001,USA.
V11139	DEUTSCH COMAPNY ELECTRONIC COMPONENTS DIVISION 700 S HATHWAY MUNICIPAL AIRPORT BANNING CA 92220
V11941	PROTECTOR INC. MARSHFIELD, MAS, 02050 - FORMILY V2P918 -
V12115	SIERRA TECHNOLOGIES INC., SIERRA RESEARCH DIVISION, P.O.BOX 222, BUFFALO, NEW YORK, 14225, USA. (WAS LTV MISSILES & ELECTRONICS GROUP)
V12467	FAIRCHILD CAMERA & INSTRUMENT CORP. FAIRCHILD INDUSTRIAL PRODUCTS DIV., SUB.OF SCHLUMBERGER LTD., COMMACK,N.Y.
V12512	CROWN LIGHTING CORP 10-21 CLINTONVILLE STREET WHITESTONE NY 11357 U S A
V12697	CLAROSTAT SENSORS AND CONTROLS 12055 ROJAS DR SUITE K EL PASO, TX, 79936 USA
V13499	SEE 4V792
V13555	GENERAL TIME INSTRUMENTS INC., 404 ARMOUR STREET, PO BOX 338, DAVIDSON,NC28036,USA.

V13691	SENSOR SYSTEMS INC 8929,FULLBRIGHT AVENUE, CHATSWORTH,CALIFORNIA,91311,USA.
V14283	MATRIX SCIENCE CORP 455 MAPLE AVENUE, TORRANCE,LOUISIANIA 90503,USA.
V14550	LSI LUMINESCENT SYSTEMS INC 130 COMMERCE WAY EAST AURORA, NEW YORK 14052-2191
V14949	TROMPETER ELECTRONICS, INC., 31186 LA BAYA DR., WESTLAKE VILLAGE, CA 91362-4047
V15084	DUPREE INC AEROSPACE KNOB CO DIVISION, 9835 DUPREE STREET,PO BOX 3156, SOUTH EL MONTE,CA,91733 USA.
V15801	FENWAL ELECTRONICS DIVISION OF KIDDE WALTER AND CO INC 63,FOUNTAIN STREET, FRAMINGHAM,MA,01701 USA.
V16017	KGS ELECTRONICS, 2029 N.LINCOLN AVE, PASADENA,CA.91103,USA.
V17023	BRUCE INDUSTRIES INC., 101 EVANS AVE, P O BOX 1700, DAYTON NV 89403,USA.
V17784	BRUCE INDUSTRIES INC 101 EVANS AVE PO BOX 1700 DAYTON NV 89403
V19527	LUCAS AEROSPACE INC LUCAS AVITRON DIV 1 CIRCLR W STAMFORD CT 06912 203 351 8400
V19710	MPC PRODUCTS CORP 7426 N LINDER AVENUE SKOKIE IL 60076-3219 USA (WAS 92063 & +2174 ON COOP)
V2P918	CHLORIDE PYROTECTOR HINCHAM,MAS, USA. - SEE V11941 -
V2W749	PRECISION PATTERN INC 2620 E G STREET TACOMA WA 98421-1907
V21649	OTTO 2 E.MAIN ST., CARPENTERSVILLE IL. 60110 USA. U.K. AGENT, HOWELL 0603 811436.
V21928	INTERTIA SWITCH INC 260 NORTH ROUTE 303 WEST NYACK, NY 10994-1608
V22373	SEE ALLIED SIGNAL GENERAL (VC0W8Z8)
V22894	FAIRCHILD WESTON SYSTEMS DATA SYSTEMS DIVISION OF SANGAMO WESTON INC, PO BOX 3041, SARASOTA,FLORIDA 33578,USA. -FORMERLY FAIRCHILD AVIATION RECORDERS-

V23939	CAPTOR CORP. 5040 S. COUNTRY ROAD 25A TIPP CITY, OHIO (513-667-8484)
V25583	B.F.GOODRICH AEROSPACE JET ELECTRONICS AND TECHNOLOGY INC 5353 52ND STREET SOUTH EAST, GRAND RAPIDS,MICHIGAN 49508 USA
V26433	PARKER HANNIFFIN CORP., AIRBORNE MFG.DIV. P.O. BOX 4032 711 TAYLOR STREET, ELYRIA, OHIO,44036,USA
V26512	GRUMMAN AEROSPACE CORP 609 SOUTH OYSTER BAY ROAD, BETHPAGE, NEW YORK,11714 USA. PLEASE NOTE THAT GRUMMAN WILL ONLY SUPPLY DIRECT TO RCJ, THEREFORE OUR V+1251 SHOULD BE USED IN THE I.P.C.
V27191	CUTLER HAMMER INC POWER DISTRIBUTION AND CONTROL DIV. MILWAUKEE WI. 53216. USA
V27914	ALLIED SIGNAL INC. DBA ALLIED-SIGNAL AEROSPACE CO., BENDIX/KING AIR TRANSPORT,AVIONICS DIV., 2100 NW 62ND ST., FORT LAUDERDALE,FL33309.USA. -WAS V+1977 -
V28198	POSITRONIC INDUSTRIES INC., 423,NORTH CAMPBELL STREET, SPRINGFIELD, MISSOURI 65806,USA.
V29648	BRAILSFORD AND CO INC 670 MILTON ROAD RYE NY 10580-3227 914 967 1820
V29780	MONOGRAM SANITATION, 800 WEST ARTESIA BLVD., COMPTON, CALIFORNIA 90224-9057.USA.
V31435	LUCAS AEROSPACE POWER EQUIPMENT CORP 777 LENA DRIVE AURORA OHIO 44202,USA. (FORMERLY LEAR-SEAGLER POWER EQUIPMENT)
V31757	MICRO PAC INC. P.O.BOX 1036 905,EAST WALNUT STREET, GARLAND,TEXAS,75040.USA.
V32042	MICROPUMP CORP 1980A OLIVERA ROAD PO BOX 4001 CONCORD CA 94524
V32245	AEROSPACE OPTICS INC 3201 SANDY LANE, FORT WORTH, TEXAS 76112,USA.
V32284	ROTRON INC (UK OFFICE) EG &G ROTRON LMB CORONATION ROAD HIGH WYCOMBE BUCKS HP12-3TP (US CODE 82877)
V34163	AEROSPACE SYSTEMS & COMPONENTS INC 5201 E 36TH ST N WICHITA KS 67220-3206 316 686 7392

V35344	LEACH CORP,RELAY DIVISION. 5915 AVALON BOULEVARD, LOS ANGELES, CALIFORNIA 90003,USA.
V4V792	ROCKWELL INTERNATIONAL, COLLINS AIR TRANSPORT DIVISION, 400,COLLINS ROAD,NORTH EAST, CEDAR RAPIDS,IOWA 52498,USA.
V4W953	PRECISION PATTERN INC 1643 SOUTH MAIZE ROAD WICHITA, KANSAS 67209-1922
V49367	PYLE NATIONAL CO DIV OF BRAND REX CO, 1334 NEST KOSTNER AVENUE, CHICAGO,IL,60651 USA.
V51351	COMANT INDUSTRIES, INC 12920 PARK STREET SANTA FE SPRINGS, CA 90670
V51752	GLOBAL WULFBERG SYSTEMS 8216 154TH AVE NE REDMOND WA 98052 TEL 714 851 0119
V54001	GLOBAL-WULFBERG SYSTEMS 6400 WILKINSON DRIVRE. PRESCOTT AZ 86301 TEL: 602-445-5711
V55284	ALLIED-SIGNAL AEROSPACE CO GARRETT FLUID SYSTEMS DIVISION 1300 W WARNER ROAD P O BOX 22200 TEMPE AZ 85285 -2200 TEL 602-231-1000
V55635	DAYTON-GRANGER INC 812 NORTH WEST FIRST STREET,PO BOX 14070, FORT LAUDERDALE,FLORIDA 33302,USA.
V55820	TURBOMACH (DIVISION OF SUNDSTRAND) 4400 RUFFIN ROAD,PO BOX 85757, SAN DIEGO,CALIFORNIA 92138,USA.
V55939	SPERRY CORPORATION, FLIGHTSYSTEMS AVIONICS, 5353 W.BELL ROAD, GLENDALE,AZ85308,USA.
V56081	BAKER ELECTRONICS INC 7867 BRADENTON ROAD, SARASOTA,FLORIDA 33580,USA.
V56732	DEE HOWARD CORP PO BOX 17300 SAN ANTONIO INTERNATIONAL AIRPORT TEXAS 78217 USA TEL: 210 821 4040 FAX: 210 821 4077 CONTACT : RICHARD ADAMS
V58192	FOXTRONICS INC 7515 LEMMON AVE, HANGER ¢M',P O BOX 7031, DALLAS,TEXAS,TX 75209 USA.
V58257	COLLINS GENERAL AVIATION COSTA MESA OPERATION 3000 AIRWAY AVE COSTA MESA CA92626-3662 USA
V58507	POINTER INC., 1453 WEST ALAMEDA DRIVE, TEMPER,AZ85282-3823,USA.

V58657	LEACH INTERNATIONAL OF NORTH AMERICA 6900 ORANGETHORPE AVE P.O. BOX 5032 BUENA PARK, CALIFORNIA 90622-5032 WAS: LEACH CORP V35344 & V00614
V58960	HONEYWELL INC SPERRY FLIGHT SYSTEMS, COMMERCIAL DIVISION, PO BOX 21111,NORTH 19TH AVENUE, PHOENIX,AZ,85036.USA. -FORMERLY SPERRY CORP-
V58982	PRECISION CONNECTOR DESIGN INC., 5 LOWELL AVENUE, WINCHESTER,MA 01890,USA.
V59551	B & D INSTRUMENTS INC 209 WEST MAIN STREET, VALLEY CENTRE, KANSAS, 67147 3811 USA.
V59579	AEROSPACE LIGHTING CORP 20 OSER AVENUE, HAPPAUGE, LONG ISLAND,N.Y.11787 USA.
V60253	ARTEX INC 10714 SOUTH TOWNSHIP ROAD P. O. BOX 1270 CANBY, OREGON 97013
V62983	VICKERS INC. AEROSPACE MARINE DEFENCE 5353 HIGHLAND DRIVE, P.O. BOX 10177 JACKSON,MS 39206-1177
V63017	CONCORDE BATTERY CORP 2009 SAN BERNARDINO ROAD WEST COVINA CA 91790-1006 626 813 1234
V63131	DAVTRON INC 427 HILLCREST WAY REDWOOD CITY CA. 94062-4012. USA. -WAS V+1131-
V63563	CHELTON INC 698 METRO PARK CIRCLE LEWISVILLE, TEXAS 75075
V65507	HONEYWELL INC. 8840 EVERGREEN BLVD MINNIAPLOIS, MINNESOTA 55433 (612-785-4000)
V65998	MAGNETEK TRANSDUCER PRODUCTS, TRANSDUCER PRODUCTS DIVISION, 650 EASY STREET,SIMI VALLEY, CALIFORNIA 93065,USA.
V66197	ELECTRONIC CABLE SPECIALIST 5300 WEST FRANKLIN AVENUE FRANKLIN, WISCONSIN 53132
V66462	INTERSERVICE LTD 1685 KENMARE DRIVE DRESHER PA19025-1223 USA
V7X000	GARRETT AIRLINE SERVICES DIVISION P O BOX 52170, PHOENIX, ARIZONA 85072-2170,USA. - WAS VK8884 - .

V70210	ALLIED SIGNAL AEROSPACE CO A DIVISION OF THE GARRETT CORP, (ORDER FROM 7X000) 2525 W190TH STREET TORRANCE CA 90509-2960
V70898	RAYTHEON AIRCRAFT COMPANY 9709 E CENTRAL ,PO BOX 85 WITCHITA KS67201-3721 USA - FORMERLY BEECH AIRCRAFT GROUP -
V71400	MCGRAW-EDISON CO., (BUSSMANN DIV.) 114 OLD STATE ROAD, PO BOX 14460, ST.LOUIS, MISSOURI 63178,USA.
V71468	ITT CANNON ELECTRIC CORP., 10550 TALBERT AVE, PO BOX 8040, FOUNTAIN VALLEY, CALIFORNIA 92708,USA.
V72914	USE 0BYW8.
V73168	FENWAL SAFETY SYSTEMS INC., 700 NICKERSON RD., MARLBOROUGH,MA 01752.USA. FORMERLEY,(0KDP7),FENWAL INC.ASHLAND MA.
V74025	MARATHON POWER TECHNOLOGIES (BATTERY PRODUCTS) 8301 IMPERIAL DR. PO BOX 8233 WACO TX. 75714-8233, USA
V74063	HARTMAN ELECTRICAL,C/O AIRSUPPLY DIV. ALLIED-SIGNAL AEROSPACE CO., ENGIEERED PRODUCTS OPERATIONS 2441 WEST ERIE DRIVE TEMPE ARIZONA 85252 SEE ALSO 0KD80.
V74868	AMPHENOL CORP., RF/MICROWAVE OPNS 1 KENNEDY AVENUE, DANBURY, CONNECTICUT 06810-5803 (FORMERLY BUNKER RAMO-ELECTRA CORP)
V75582	LEVITON MANUFACTURING COMPANY 59-25 LITTLE NECK PARKWAY LITTLE NECK, NEW YORK 11362-2531 FORMERLY IN BROOKLYN, NEW YORK 718 229 4040 OR 800 824 3005
V76055	MALLROY CONTROLS CO SUB OF EMHART INDUSTRIES INC STATE ROAD 28W FRANKFORT IN 46041
V77820	BENDIX CORP THE ELECTRICAL COMPONENTS DIVISION, SHERMAN AVENUE,SIDNEY, NEW YORK 13838,USA.
V8Y544	RCS ELECTRONICS INC 131 LAURA WICHITA KS67201
V81073	GRAYHILL INC 561 HILLGROVE AVENUE, LA GRANGE, ILLINOIS 60525,USA.

V81349	MILITARY SPECIFICATIONS PROMULGATED BY MILITARY DEPARTMENTS AGENCIES, UNDER AUTHORITY OF DEFENSE STANDARDIZATION, MANUAL 4120 3-M.
V81579	MASON ELECTRIC CO. INC. SUBSIDUARY OF CLAROSTAT MFG. CO. INC. 605 8TH STREET PO BOX 311 SAN FERNANDO CA. 91341-0311 - FORMERLY 76220 -
V81640	EATON CORP AEROSPACE AND COMMERCIAL CONTROLS DIVISION, 2074 WHITFIELD AVENUE,EAST, PO BOX 1978 SARSOTA,FL,33578 USA.
V81646	IDEAL CORP SUB OF PARKER-HANNIFIN CORP 1000 PENNSYLVANIA AVENUE, BROOKLYN, NEW YORK,11207 USA.
V82389	SWITCHCRAFT INC SUB OF RAYTHEON CO 5555 NORTH ELSTRON AVENUE, CHICAGO,ILL,60630 USA.
V82642	SHATTERPROOF GLASS CORP 4815 CABOT AVE DETROIT MI 48210-2002
V82647	TEXAS INSTRUMENTS INC CONTROL PRODUCTS DIVISION, 34 FORREST STREET MAIL STATION,12-33, ATTLEBORO,MASSACHUSETTS 02703,USA.
V82837	MIDLAND ROSS CORP., GRIMES DIVISION,GALLEY PRODUCTS, MANSFIELD LAHM AIRPORT,PO BOX 277, MANSFIELD,OHIO 44901,USA. SEE ALSO OBYW8.
V82877	ROTRON INC.CUSTOM DIV. 7 HASBROUCK LANE, WOODSTOCK,NY 12498,USA. (UK OFFICE CODE 33284)
V83326	SAFE FLIGHT INSTRUMENT CORP 20 NEW KING STREET,PO BOX 550, WHITE PLAINS,NEW YORK 10602-550 USA.
V83564	PURITAN-BENNETT AERO SYSTEMS CO (WEMAC DIVISION) 18475 PACIFIC STREET,PO BOX 8797, FOUNTAIN VALLEY,CALIFORNIA 92708,USA. 714 962 8874
V84063	AMCHEM PRODUCTS INC SPRING GARDEN STREET, AMBLER,PENNSYLVANIA 19002,USA.
V85226	DORNE & MARGOLIN INC 2950 VETERANS MEMORIAL HIGHWAY, BOHEMIA,NEW YORK 11716.USA.
V88917	BENDIX CORP. TETERBORO,NEW JERSEY,USA.

V9T002	DOWTY AEROSPACE AVIATION SYSTEMS INC., SULLY RD, P O BOX 5000, STERLING,VA.22170.USA.
V90073	CANADIAN MARCONI CO 2442 TRENTON AVE MONTREAL QUEBEC H3P 1Y9 CANADA
V90362	STAR MFG.CO. DIV OF PEABODY INTERNATIONAL CORP. 9325 OLIVE ST RD., ST.LOUIS,MO 63132.USA.
V91637	DALE ELECTRONICS INC., 2064 12TH AVE, PO BOX 609, COLUMBUS,NE68601,USA.
V91812	JANCO CORPORATION. PO BOX 3038,3111 WINONA AVENUE, BURBANK,CALIFORNIA 91504,USA.
V91836	KINGS ELECTRONICS CO INC 40 MARBLEDALE ROAD, TUCKAHOE, NEW YORK, 10707 USA.
V91929	HONEYWELL INC.MICRO SWITCH DIV., 11,W SPRING STREET, FREEPORT,IL.61032. USA. WAS V+1822 AND VA1822
V95146	ALCO ELCTRONIC PRODUCTS INC., 1551,OSGOOD STREET, NORTH ANDOVER,A01845,USA.
V95263	LEECRAFT MANUFACTURING CO. INC., DEPT. G.21-02, 44 TH. ROAD, LINCOLN,NY,11101, USA.
V96182	EATON CORP AEROSPACE AND COMMERCIAL CONTROLS DIV MSC PROD 1640 MONROVIA COSTA MESA, CALIFORNIA 92627-4405 FORMERLY MASTER SPECIALITIES CO IN GARDENA, CALIFORNIA
V96906	MILITARY STANDARDS LOGISTIC SERVICES USA.
V97896	ALLIEDSIGNAL AVIONICS INC 15001 N.E.36TH STREET, P O BOX 97001, REDMOND,WA 98073-9701,USA. FORMERLY SUNDSTRAND DATA CONTROL INC
V98085	COX AND COMPANY, INCORPORATED 200 VARICK STREET NEW YORK, NEW YORK 10014-4810
V98810	AEROSONIC CORP 1212 NORTH HERCULES AVENUE, CLEARWATER,FL,34625 USA.
V99167	SUNSTRAND AEROSPACE SUNSTRAND CORP., 4747 HARRISION AVENUE,PO BOX 7002, ROCKFORD,IL 61125-7002 USA.
V99193	GARRETT TURBINE ENG.CO. A DIV OF THE GARRETT CORP (ORDER FROM 7X000).

V99837	GABLES ENGINEERING INC. 247 GRECO AVENUE, CORAL GABLES,FL.33146,USA.

WIRING DIAGRAM LISTING

"THE FOLLOWING LIST CONTAINS THE WIRING DIAGRAMS THAT HAVE BEEN USED TO COMPILE THE PARTS DATA IN THIS MANUAL. THEY RELATE TO THE AVIONICS AND SPECIAL EQUIPMENT FITTED TO THE AIRCRAFT SPECIFIED ON THE TITLE PAGE OF THIS MANUAL. THEY HAVE BEEN PUBLISHED WITHIN THIS MANUAL FOR REFERENCE PURPOSES ONLY AND SHOULD NOT BE USED FOR TROUBLESHOOTING ANY OF THE SYSTEMS ON THE AIRCRAFT. THIS SHOULD BE ACCOMPLISHED BY USING THE WIRING DIAGRAM MANUALS PROVIDED WITH THE AIRCRAFT AT THE TIME OF DELIVERY."

WIRING DIAGRAM DRAWING NO.	SHEET NO.	ISSUE NO.	CSUF LOCATION
25-8NA5-60	001	002	78300501
25-8NA5-60	002	002	78300501
25-8NA5-101A	001	007	24301002
25-8NA5-101A	002	006	24301002
25-8NA5-101B	001	008	24302002
25-8NA5-101B	002	009	24302002
25-8NA5-108	001	005	28210502
25-8NA5-108	002	005	28210502
25-8NA5-110B	001	001	33401502
25-8NA5-116B	001	008	32602002
25-8NA5-117	001	005	32603002
25-8NA5-125A	001	005	30303102
25-8NA5-125B	001	004	30301002
25-8NA5-125C	001	007	30302002

WIRING DIAGRAM DRAWING NO.	SHEET NO.	ISSUE NO.	CSUF LOCATION
25-8NA5-126	001	003	77101002
25-8NA5-126	002	003	77101002
25-8NA5-128	001	003	77201002
25-8NA5-129	001	005	28402002
25-8NA5-130	001	005	79301002
25-8NA5-130	002	007	79301002
25-8NA5-132	001	004	28404002
25-8NA5-133	001	009	31203502
25-8NA5-135	001	006	27501002
25-8NA5-139	001	008	31206002
25-8NA5-145	001	004	30201002
25-8NA5-145	002	003	30201002
25-8NA5-147	001	003	30801002
25-8NA5-149	001	002	26102002
25-8NA5-150	001	004	21301002
25-8NA5-157	001	005	52701002
25-8NA5-158	001	004	28421002
25-8NA5-160	001	003	78300502
25-8NA5-160	002	002	78300502
25-8NA5-162	001	005	27241002
25-8NA5-167	001	003	21602002
25-8NA5-179	001	004	29311002

WIRING DIAGRAM DRAWING NO.	SHEET NO.	ISSUE NO.	CSUF LOCATION
25-8NA5-190A	001	006	28411002
25-8NA5-190A	002	006	28411002
25-8NA5-190C	001	005	28413002
25-8NA5-191	001	004	77401002
25-8NA5-201B	001	001	24302003
25-8NA5-201B	002	001	24302003
25-8NA5-205	001	005	24211703
25-8NA5-205	002	006	24211703
25-8NA5-208	001	001	28210503
25-8NA5-208	002	002	28210503
25-8NA5-211	001	004	33403003
25-8NA5-217	001	004	32603003
25-8NA5-220B	001	005	30402003
25-8NA5-222	001	006	26201003
25-8NA5-227	001	012	26101003
25-8NA5-233	001	001	31203503
25-8NA5-240	001	004	27611003
25-8NA5-247	001	003	30801003
25-8NA5-254	001	004	26103003
25-8NA5-262	001	002	27241003
25-8NA5-263C	001	007	73201003
25-8NA5-267	001	005	21602003

WIRING DIAGRAM DRAWING NO.	SHEET NO.	ISSUE NO.	CSUF LOCATION
25-8NA5-274	001	005	21201003
25-8NA5-277	001	002	31500503
25-8NA5-277	002	001	31500503
25-8NA5-277	003	001	31500503
25-8NA5-290A	001	004	28411003
25-8NA5-290A	002	006	28411003
25-8NA5-290B	001	006	28412003
25-8NA5-290B	002	005	28412003
25-8NA5-293	001	003	27001003
25-8NA5-304	001	012	80101004
25-8NA5-304	002	012	80101004
25-8NA5-305	001	005	24211704
25-8NA5-305	002	005	24211704
25-8NA5-307	001	007	28401004
25-8NA5-307	002	007	28401004
25-8NA5-308	001	003	28210504
25-8NA5-308	002	003	28210504
25-8NA5-310	001	005	33402004
25-8NA5-312B	001	005	33102004
25-8NA5-312B	002	006	33102004
25-8NA5-316A	001	010	32601004
25-8NA5-316A	002	010	32601004

WIRING DIAGRAM DRAWING NO.	SHEET NO.	ISSUE NO.	CSUF LOCATION
25-8NA5-316A	003	010	32601004
25-8NA5-340	001	004	27611004
25-8NA5-340B	001	003	27612004
25-8NA5-350	001	006	21301004
25-8NA5-351	001	005	31500104
25-8NA5-351	002	008	31500104
25-8NA5-351	003	002	31500104
25-8NA5-368	001	006	34130104
25-8NA5-388	001	004	33311004
25-8NA5-393	001	004	27001004
25-8NA5-403A	001	008	24500105
25-8NA5-403A	002	010	24500105
25-8NA5-403A	003	010	24500105
25-8NA5-403C	001	009	24900105
25-8NA5-407	001	001	28401005
25-8NA5-407	002	001	28401005
25-8NA5-409	001	006	33401005
25-8NA5-409	001	008	33401006
25-8NA5-409	002	004	33401005
25-8NA5-409	002	005	33401006
25-8NA5-412A	001	007	33100505
25-8NA5-412A	002	005	33100505

WIRING DIAGRAM DRAWING NO.	SHEET NO.	ISSUE NO.	CSUF LOCATION
25-8NA5-412A	003	007	33100505
25-8NA5-412A	004	005	33100505
25-8NA5-420B	001	005	30402005
25-8NA5-431	001	005	28403005
25-8NA5-442	001	006	29321005
25-8NA5-455	001	003	27330005
25-8NA5-455	002	003	27330005
25-8NA5-455	003	006	27330005
25-8NA5-455	004	005	27330005
25-8NA5-455	005	005	27330005
25-8NA5-455	006	005	27330005
25-8NA5-455	007	005	27330005
25-8NA5-455	008	005	27330005
25-8NA5-455	009	003	27330005
25-8NA5-463A	001	004	73200105
25-8NA5-463A	002	004	73200105
25-8NA5-463B	001	005	73200205
25-8NA5-463B	002	006	73200205
25-8NA5-463B	003	006	73200205
25-8NA5-483A	001	005	49601005
25-8NA5-483A	002	001	49601005
25-8NA5-483A	003	001	49601005

WIRING DIAGRAM DRAWING NO.	SHEET NO.	ISSUE NO.	CSUF LOCATION
25-8NA5-503A	001	006	24500106
25-8NA5-503A	002	001	24500106
25-8NA5-503A	003	006	24500106
25-8NA5-503C	001	002	24900106
25-8NA5-506	001	005	24531006
25-8NA5-583	001	003	49603006
25-8NA5-583	002	004	49603006
25-8NA5-583	003	004	49603006
25-8NA5-583	004	004	49603006
25-8NA5-603A	001	002	24500107
25-8NA5-603A	002	002	24500107
25-8NA5-603A	003	002	24500107
25-8NA5-612A	001	001	33100507
25-8NA5-612A	002	001	33100507
25-8NA5-612A	003	001	33100507
25-8NA5-612A	004	001	33100507
25-8NA5-612B	001	001	33102007
25-8NA5-612B	002	001	33102007
25-8NA5-614A	001	001	33300507
25-8NA5-614C	001	002	33301507
25-8NA5-620A	001	005	30401507
25-8NA5-620A	002	005	30401507

WIRING DIAGRAM DRAWING NO.	SHEET NO.	ISSUE NO.	CSUF LOCATION
25-8NA5-620A	003	005	30401507
25-8NA5-620A	004	004	30401507
25-8NA5-644	001	001	21311007
25-8NA5-651	001	002	31500107
25-8NA5-651	002	003	31500107
25-8NA5-651	003	001	31500107
25-8NA5-655	001	010	27330007
25-8NA5-655	002	010	27330007
25-8NA5-655	003	010	27330007
25-8NA5-655	004	010	27330007
25-8NA5-655	005	010	27330007
25-8NA5-655	006	010	27330007
25-8NA5-655	007	010	27330007
25-8NA5-655	008	010	27330007
25-8NA5-655	009	010	27330007
25-8NA5-689	001	006	27301007
25-8NA5-703B	001	006	24500508
25-8NA5-703B	002	004	24500508
25-8NA5-703B	003	004	24500508
25-8NA5-703B	004	004	24500508
25-8NA5-706	001	002	24531008
25-8NA5-712A	001	001	33100508

WIRING DIAGRAM DRAWING NO.	SHEET NO.	ISSUE NO.	CSUF LOCATION
25-8NA5-712A	002	001	33100508
25-8NA5-712A	003	001	33100508
25-8NA5-712A	004	001	33100508
25-8NA5-712B	001	008	33102008
25-8NA5-712B	002	008	33102008
25-8NA5-714A	001	006	33300508
25-8NA5-724	001	004	21601008
25-8NA5-724	002	003	21601008
25-8NA5-724	003	003	21601008
25-8NA5-740	001	002	27611008
25-8NA5-751	001	004	31500108
25-8NA5-751	002	004	31500108
25-8NA5-751	003	001	31500108
25-8NA5-768	001	003	34130108
25-8NA5-783	001	008	49603008
25-8NA5-783	002	007	49603008
25-8NA5-783	003	004	49603008
25-8NA5-783	004	007	49603008
25-8NA5-789	001	001	27301008
25-8NA5-812A	001	004	33100509
25-8NA5-812A	002	003	33100509
25-8NA5-812A	003	002	33100509

WIRING DIAGRAM DRAWING NO.	SHEET NO.	ISSUE NO.	CSUF LOCATION
25-8NA5-812A	004	003	33100509
25-8NA5-851	001	003	31500109
25-8NA5-851	002	003	31500109
25-8NA5-851	003	001	31500109
25-8NA5-873	001	004	33501009
25-8NA5-883	001	001	49603009
25-8NA5-883	002	003	49603009
25-8NA5-883	003	001	49603009
25-8NA5-883	004	003	49603009
25-8NA5-913C	001	002	33201010
25-8NA5-920A	001	002	30401510
25-8NA5-920A	002	002	30401510
25-8NA5-920A	003	002	30401510
25-8NA5-920A	004	001	30401510
25-8NA5-924	001	002	21601010
25-8NA5-924	002	001	21601010
25-8NA5-924	003	003	21601010
25-8NA5-1003B	001	002	24500511
25-8NA5-1003B	002	001	24500511
25-8NA5-1003B	003	001	24500511
25-8NA5-1003B	004	001	24500511
25-8NA5-1012A	001	001	33100511

WIRING DIAGRAM DRAWING NO.	SHEET NO.	ISSUE NO.	CSUF LOCATION
25-8NA5-1012A	002	001	33100511
25-8NA5-1012A	003	001	33100511
25-8NA5-1012A	004	001	33100511
25-8NA5-1020A	001	002	30401511
25-8NA5-1020A	002	002	30401511
25-8NA5-1020A	003	001	30401511
25-8NA5-1020A	004	001	30401511
25-8NA5-1024	001	002	21601011
25-8NA5-1024	002	003	21601011
25-8NA5-1024	003	004	21601011
25-8NA5-1024	004	002	21601011
25-8NA5-1046	001	007	30101011
25-8NA5-1083	001	004	49603011
25-8NA5-1083	002	004	49603011
25-8NA5-1083	003	003	49603011
25-8NA5-1083	004	004	49603011
25-8NA5-1120A	001	003	30401512
25-8NA5-1120A	002	003	30401512
25-8NA5-1120A	003	006	30401512
25-8NA5-1120A	004	002	30401512
25-8NA5-1303B	001	001	24500514
25-8NA5-1303B	002	001	24500514

WIRING DIAGRAM DRAWING NO.	SHEET NO.	ISSUE NO.	CSUF LOCATION
25-8NA5-1303B	003	001	24500514
25-8NA5-1303B	004	001	24500514
25-8NA5-1351	001	001	31500114
25-8NA5-1351	002	001	31500114
25-8NA5-1351	003	001	31500114
25-8NA5-1403B	001	002	24500515
25-8NA5-1403B	002	001	24500515
25-8NA5-1403B	003	001	24500515
25-8NA5-1403B	004	002	24500515
25-8NA5-3012C	001	001	33101031
25-8NA5-5238D	001	002	22104053
25-8NA5-6603E	001	002	24500767
25-8RA5-5162B	001	001	23312052
25-8RA5-5232A	001	003	34301053
25-8RA5-5232A	002	002	34301053
25-8RA5-5232B	001	002	34302053
25-8RA5-5232B	002	002	34302053
25-8RA5-5762A	001	001	23311058
25-8RA5-6462A	001	001	23311065

ELEC IDENT INDEX

IDENT CH-SECT-UNIT-FIG	PART NUMBER
A	
33-30-05 07	HWBUN1146D10B
49-60-30 06	M12883-41-16
49-60-30 08	M12883-41-16
49-60-30 09	M12883-41-16
49-60-30 11	M12883-41-16
49-60-30 06	M300-1264
49-60-30 08	M300-1264
49-60-30 09	M300-1264
49-60-30 11	M300-1264
33-10-20 04	140-4537
33-10-20 07	140-4537
33-10-20 08	140-4537
A-AA	
33-10-20 07	D492-05-001
33-10-20 08	LT52A
A-AA	
33-10-20 04	4-013-02
A-AA-R	
33-10-20 08	BAEREF000004218
33-10-20 08	KPT06B14-5S
33-10-20 04	LS10215R12-12SN
33-10-20 07	LS10215R12-12SN
33-10-20 08	6026-14-5SNCON* DD
A-AB	
33-10-20 07	D492-05-001
33-10-20 08	LT52A
A-AB	
33-10-20 04	4-013-02
A-AB-R	
33-10-20 08	BAEREF000004218
33-10-20 08	KPT06B14-5S
33-10-20 04	LS10215R12-12SN
33-10-20 07	LS10215R12-12SN
33-10-20 08	6026-14-5SNCON* DD
A-AP	
33-40-15 02	7064-4656
A-CC	
31-50-01 04	2D70
31-50-01 07	2D70
31-50-01 08	2D70
31-50-01 09	2D70
31-50-01 04	6A43
31-50-01 07	6A43
31-50-01 08	6A43
31-50-01 09	6A43
A-CN	
30-30-20 02	E37040S
A-CN-R	

IDENT CH-SECT-UNIT-FIG	PART NUMBER
A-CN-R	
30-30-20 02	GTR62-14MACS1
30-30-20 02	MS3476L14-12SN
A-D-XZ	
24-50-05 08	S6GN55
24-50-05 11	S6GN55
24-50-05 14	S6GN55
24-50-05 15	S6GN55
24-50-05 11	25-8NF2371-31A
24-50-05 14	25-8NF2371-31A
24-50-05 15	25-8NF2371-31A
A-DAG	
30-40-15 07	HC921H0467-000
30-40-15 10	HC921H0467-000
A-DR	
30-30-20 02	80-10-1351
A-EP	
27-30-10 07	HWBUN1736D5B
27-30-10 08	HWBUN1736D5B
27-61-20 04	HWBUN1736D5B
27-61-20 04	25-7NF1815-9A
27-30-10 07	25-8NF841-1A
27-30-10 08	25-8NF841-1A
A-GA	
49-60-10 05	A703FSS
A-GG	
28-40-20 02	HWBUN1146D10B
28-40-30 05	HWBUN1146D10B
28-40-40 02	HWBUN1146D10B
28-41-10 02	HWBUN1146D10B
28-41-10 03	HWBUN1146D10B
49-60-30 06	HWBUN1146D10B
49-60-30 08	HWBUN1146D10B
73-20-01 05	HWBUN1146D10B
73-20-02 05	HWBUN1146D10B
73-20-10 03	HWBUN1146D10B
80-10-10 04	HWBUN1146D10B
A-GG	
49-60-30 09	72544-030-0AV2
A-J	
33-20-10 10	H1800C1
A-JA	
27-61-10 03	HWBUN1146D10B
27-61-10 04	HWBUN1146D10B
27-61-10 08	HWBUN1146D10B
28-41-10 02	HWBUN1146D10B
28-41-10 03	HWBUN1146D10B
28-41-20 03	HWBUN1146D10B
28-41-30 02	HWBUN1146D10B
32-60-10 04	HWBUN1146D10B
32-60-20 02	HWBUN1146D10B

IDENT CH-SECT-UNIT-FIG	PART NUMBER
A-JA	
33-40-10 05	HWBUN1146D10B
33-40-10 06	HWBUN1146D10B
33-40-20 04	HWBUN1146D10B
34-13-01 04	HWBUN1146D10B
A-KL	
28-41-10 02	3515000-149
28-41-10 03	3515000-149
A-PQ	
32-60-10 04	3BA002768-18
A-TQ	
49-60-10 05	MS3106R16S1S
49-60-10 05	968087-2
A-UC	
31-50-05 03	HTE250017
A-WX	
31-50-05 03	B375-01
31-50-05 03	99-930
A-XZ	
24-30-10 02	51509-006C
A-XZ	
24-30-10 02	51539-006H
A-XZ-R	
24-30-10 02	MS3057-16A
24-30-10 02	MS3126F8-3S
A-ZJ	
31-50-05 03	M12883-41-16
31-50-05 03	M300-1264
A-ZL	
24-50-01 05	BAEREF000003234
24-50-01 06	BAEREF000003234
24-50-01 07	BAEREF000003234
24-50-01 05	SW06HHN400SUU9* 096
24-50-01 06	SW06HHN400SUU9* 096
24-50-01 07	SW06HHN400SUU9* 096
A-ZT	
21-60-10 11	ERS015DJ000
A-ZZ	
49-60-30 06	703FSS
49-60-30 08	703FSS
49-60-30 09	703FSS
AA	
33-10-05 05	MBC17
33-10-05 07	MBC17
33-10-05 08	MBC17
33-10-05 09	MBC17
33-10-05 11	MBC17
AA	

IDENT CH-SECT-UNIT-FIG	PART NUMBER
AA	
33-10-05 05	MBC004
33-10-05 07	MBC004
33-10-05 08	MBC004
33-10-05 09	MBC004
33-10-05 11	MBC004
AA-DA	
28-21-05 02	HWBUN1146S3B
28-21-05 03	HWBUN1146S3B
28-21-05 04	HWBUN1146S3B
AA-DAB	
24-50-01 05	HDS8SF2L03
24-50-01 06	HDS8SF2L03
24-50-01 07	HDS8SF2L03
24-30-10 02	HD58SF2L03
24-30-10 02	RSE120074
24-50-01 05	RSE120074
24-50-01 06	RSE120074
24-50-01 07	RSE120074
AA-DAC	
28-21-05 02	9330-4026
28-21-05 03	9330-4026
28-21-05 04	9330-4026
AA-DAE	
21-31-10 07	1103KSDBU2
AA-DAH	
27-33-00 05	25-8NF977-1A
27-33-00 07	25-8NF977-1A
AA-GG	
49-60-10 05	HWBUN1146D10B
AA1-P	
33-10-20 04	BAEREF000004167
33-10-20 07	BAEREF000004167
33-10-20 08	BAEREF000004167
33-10-20 04	6027-20-16SNC0* NDD
33-10-20 07	6027-20-16SNC0* NDD
33-10-20 08	6027-20-16SNC0* NDD
AA1-R	
33-10-20 04	BAEREF000003937
33-10-20 07	BAEREF000003937
33-10-20 08	BAEREF000003937
33-10-20 04	6026-20-16PNC0* NDD
33-10-20 07	6026-20-16PNC0* NDD
33-10-20 08	6026-20-16PNC0* NDD
AB	

IDENT CH-SECT-UNIT-FIG	PART NUMBER
AB	
33-10-05 05	MBC17
33-10-05 07	MBC17
33-10-05 08	MBC17
33-10-05 09	MBC17
33-10-05 11	MBC17
AB	
33-10-05 05	MBC004
33-10-05 07	MBC004
33-10-05 08	MBC004
33-10-05 09	MBC004
33-10-05 11	MBC004
AB-DAB	
24-30-20 02	HDS8SF2L03
24-30-20 03	HDS8SF2L03
24-50-01 05	HDS8SF2L03
24-50-01 06	HDS8SF2L03
24-50-01 07	HDS8SF2L03
24-30-20 02	RSE120074
24-30-20 03	RSE120074
24-50-01 05	RSE120074
24-50-01 06	RSE120074
24-50-01 07	RSE120074
AB-DAH	
27-33-00 05	25-8NF977-3A
27-33-00 07	25-8NF977-3A
AB1-P	
33-10-05 05	BAEREF000004167
33-10-05 07	BAEREF000004167
33-10-05 08	BAEREF000004167
33-10-05 09	BAEREF000004167
33-10-05 11	BAEREF000004167
33-10-20 04	BAEREF000004167
33-10-20 07	BAEREF000004167
33-10-20 08	BAEREF000004167
33-10-05 05	6027-20-16SNC0* NDD
33-10-05 07	6027-20-16SNC0* NDD
33-10-05 08	6027-20-16SNC0* NDD
33-10-05 09	6027-20-16SNC0* NDD
33-10-05 11	6027-20-16SNC0* NDD
33-10-20 04	6027-20-16SNC0* NDD
33-10-20 07	6027-20-16SNC0* NDD
33-10-20 08	6027-20-16SNC0* NDD

IDENT CH-SECT-UNIT-FIG	PART NUMBER
AB1-R	
33-10-05 05	BAEREF000003937
33-10-05 07	BAEREF000003937
33-10-05 08	BAEREF000003937
33-10-05 09	BAEREF000003937
33-10-05 11	BAEREF000003937
33-10-20 04	BAEREF000003937
33-10-20 07	BAEREF000003937
33-10-20 08	BAEREF000003937
33-10-05 05	6026-20-16PNC0* NDD
33-10-05 07	6026-20-16PNC0* NDD
33-10-05 08	6026-20-16PNC0* NDD
33-10-05 09	6026-20-16PNC0* NDD
33-10-05 11	6026-20-16PNC0* NDD
33-10-20 04	6026-20-16PNC0* NDD
33-10-20 07	6026-20-16PNC0* NDD
33-10-20 08	6026-20-16PNC0* NDD
AC	
33-10-05 05	MBC17
33-10-05 07	MBC17
33-10-05 08	MBC17
33-10-05 09	MBC17
33-10-05 11	MBC17
AC	
33-10-05 05	MBC004
33-10-05 07	MBC004
33-10-05 08	MBC004
33-10-05 09	MBC004
33-10-05 11	MBC004
AC-DAB	
24-50-01 05	HDS8SF2L03
24-50-01 06	HDS8SF2L03
24-50-01 07	HDS8SF2L03
24-50-01 05	RSE120074
24-50-01 06	RSE120074
24-50-01 07	RSE120074
AC-DAH	
27-33-00 05	25-8NF977-5A
27-33-00 07	25-8NF977-5A
30-10-10 11	25-8NF977-5A
AC-DB	
28-41-20 03	6333-014-01A4
AC-P	

IDENT CH-SECT-UNIT-FIG	PART NUMBER
AC-P	
33-20-10 10	BAEREF000003187
33-20-10 10	6027-14-12SNCO* NDD
AC-R	
33-20-10 10	BAEREF000003509
33-20-10 10	6026-14-12PNCO* NDD
ACL-CA	
33-10-10 31	A8970C1
ACL-CD	
33-10-10 31	A8970C1
AD	
33-10-05 05	MBC17
33-10-05 07	MBC17
33-10-05 08	MBC17
33-10-05 09	MBC17
33-10-05 11	MBC17
AD	
33-10-05 05	MBC004
33-10-05 07	MBC004
33-10-05 08	MBC004
33-10-05 09	MBC004
33-10-05 11	MBC004
AD-CA	
27-33-00 05	99-930
27-33-00 07	99-930
AD-CC	
21-20-10 03	2TP1-10
AD-CC	
21-20-10 03	2TP1-10M
AD-CD	
27-33-00 05	99-930
27-33-00 07	99-930
AD-DAB	
34-13-01 04	HDS8SF3J03
34-13-01 08	HDS8SF3J03
34-13-01 04	RSE120074
34-13-01 08	RSE120074
AD-DAB	
32-60-10 04	HDS8SF3J03
32-60-10 04	RSE120074
AD-GG	
49-60-10 05	HWBUN1146D10B
ADL-CA	
33-10-10 31	A8970C1
ADL-CD	
33-10-10 31	A8970C1
AE	
33-10-05 05	MBC17
33-10-05 07	MBC17

IDENT CH-SECT-UNIT-FIG	PART NUMBER
AE	
33-10-05 08	MBC17
33-10-05 09	MBC17
33-10-05 11	MBC17
AE	
33-10-05 05	MBC004
33-10-05 07	MBC004
33-10-05 08	MBC004
33-10-05 09	MBC004
33-10-05 11	MBC004
AE-CA	
27-33-00 05	99-930
27-33-00 07	99-930
AE-CD	
27-33-00 05	99-930
27-33-00 07	99-930
AE-DAB	
27-61-10 04	HDS8SF3J03
27-61-10 08	HDS8SF3J03
27-61-10 04	RSE120074
27-61-10 08	RSE120074
AE-DAB	
32-60-10 04	HDS8SF3J03
32-60-10 04	RSE120074
AE-DB	
28-41-10 02	6333-014-01A4
28-41-10 03	6333-014-01A4
AEL-CA	
33-10-10 31	A8970C1
AEL-CD	
33-10-10 31	A8970C1
AF	
33-10-05 05	MBC17
33-10-05 07	MBC17
33-10-05 08	MBC17
33-10-05 09	MBC17
33-10-05 11	MBC17
AF	
33-10-05 05	MBC004
33-10-05 07	MBC004
33-10-05 08	MBC004
33-10-05 09	MBC004
33-10-05 11	MBC004
AF-CA	
27-33-00 05	99-913
27-33-00 07	99-913
AF-CC	
79-30-10 02	2121-01-0014
AF-CD	
27-33-00 05	99-913
27-33-00 07	99-913

IDENT CH-SECT-UNIT-FIG	PART NUMBER
AF-DAB	
32-60-10 04	HDS8SF3J03
32-60-10 04	RSE120074
AG	
33-10-05 05	MBC17
33-10-05 07	MBC17
33-10-05 08	MBC17
33-10-05 09	MBC17
33-10-05 11	MBC17
AG	
33-10-05 05	MBC004
33-10-05 07	MBC004
33-10-05 08	MBC004
33-10-05 09	MBC004
33-10-05 11	MBC004
AG-CA	
27-33-00 05	99-913
27-33-00 07	99-913
AG-CD	
33-10-10 31	130530-4
27-33-00 05	99-913
27-33-00 07	99-913
AG-DAB	
32-60-10 04	HDS8SF3J03
32-60-10 04	RSE120074
AG-DB	
28-41-30 02	6333-014-01A4
AH	
33-10-05 05	MBC17
33-10-05 07	MBC17
33-10-05 08	MBC17
33-10-05 09	MBC17
33-10-05 11	MBC17
AH	
33-10-05 05	MBC004
33-10-05 07	MBC004
33-10-05 08	MBC004
33-10-05 09	MBC004
33-10-05 11	MBC004
AH-CA	
27-33-00 05	99-930
27-33-00 07	99-930
AH-CC	
79-30-10 02	2121-01-0014
AH-CD	
27-33-00 05	99-930
27-33-00 07	99-930
AH-DAB	
32-60-10 04	HDS8SF3J03
32-60-10 04	RSE120074
AH-DB	

IDENT CH-SECT-UNIT-FIG	PART NUMBER
AH-DB	
28-41-30 02	6333-014-01A4
AJ	
33-10-05 05	MBC17
33-10-05 07	MBC17
33-10-05 08	MBC17
33-10-05 09	MBC17
33-10-05 11	MBC17
AJ	
33-10-05 05	MBC004
33-10-05 07	MBC004
33-10-05 08	MBC004
33-10-05 09	MBC004
33-10-05 11	MBC004
AJ-CA	
27-33-00 05	99-913
27-33-00 07	99-913
AJ-CC	
79-30-10 02	2121-01-0013
AJ-CD	
27-33-00 05	99-913
27-33-00 07	99-913
AJ-DAB	
21-60-10 08	HDS8SF3J03
21-60-10 10	HDS8SF3J03
21-60-10 11	HDS8SF3J03
21-60-10 08	RSE120074
21-60-10 10	RSE120074
21-60-10 11	RSE120074
AJL-CD	
33-10-10 31	A8970C1
AK	
33-10-05 05	MBC17
33-10-05 07	MBC17
33-10-05 08	MBC17
33-10-05 09	MBC17
33-10-05 11	MBC17
31-20-35 02	S110G61-978
31-20-35 03	S110G61-978
AK	
33-10-05 05	MBC004
33-10-05 07	MBC004
33-10-05 08	MBC004
33-10-05 09	MBC004
33-10-05 11	MBC004
AK-DAB	
26-10-10 03	HDS8SF3J06
26-10-10 03	RSE120074
AK-DAC	
24-90-01 05	9330-4026
24-90-01 06	9330-4026

IDENT CH-SECT-UNIT-FIG	PART NUMBER
AK-DAC	
28-21-05 02	9330-4026
28-21-05 03	9330-4026
28-21-05 04	9330-4026
AK-GG	
77-10-10 02	M12883-40-19
77-10-10 02	M400-1265
AKL-CD	
33-10-10 31	A8975C2
AL	
33-40-15 02	GE4587
AL	
33-40-15 02	GE4594
AL-CC	
79-30-10 02	2121-01-0013
AL-DAB	
34-13-01 04	HDS8SF3J03
34-13-01 08	HDS8SF3J03
34-13-01 04	RSE120074
34-13-01 08	RSE120074
AL-GG	
77-10-10 02	M12883-40-19
77-20-10 02	M12883-40-19
77-10-10 02	M400-1265
77-20-10 02	M400-1265
ALL-CD	
33-10-10 31	A8970C2
AM	
33-10-10 31	CV7040
33-40-15 02	GE4587
AM	
33-40-15 02	GE4594
AM-CD	
31-50-01 14	2D70
31-50-01 14	6A43
AM-DAB	
34-13-01 04	HDS8SF3J03
34-13-01 08	HDS8SF3J03
34-13-01 04	RSE120074
34-13-01 08	RSE120074
AM-GG	
77-10-10 02	M12883-40-19
77-20-10 02	M12883-40-19
77-10-10 02	M400-1265
77-20-10 02	M400-1265
AML-CD	
33-10-10 31	A8970C1
AN	
33-10-10 31	CV7040
33-10-20 04	M05-680R
33-10-20 07	M05-680R

IDENT CH-SECT-UNIT-FIG	PART NUMBER
AN	
33-10-20 08	M05-680R
33-10-20 04	MR5-680R
33-10-20 07	MR5-680R
33-10-20 08	MR5-680R
33-10-20 04	TR5-680R
33-10-20 07	TR5-680R
33-10-20 08	TR5-680R
AN-CD	
31-50-01 14	6AT4
AN-DAB	
32-60-10 04	HDS8SF3J03
32-60-10 04	RSE120074
AN-GG	
30-20-10 02	M12883-41-16
30-20-10 02	M300-1264
ANL-CD	
33-10-10 31	A8970C2
AP	
33-20-10 10	HWBUN1736D10B
33-10-20 04	M05-680R
33-10-20 07	M05-680R
33-10-20 08	M05-680R
33-10-20 04	MR5-680R
33-10-20 07	MR5-680R
33-10-20 08	MR5-680R
33-10-20 04	TR5-680R
33-10-20 07	TR5-680R
33-10-20 08	TR5-680R
AP-CD	
31-50-01 14	140-4537-01
AP-GG	
30-30-20 02	HA5N
30-40-15 07	HA5N
30-40-15 10	HA5N
30-40-15 11	HA5N
30-40-15 12	HA5N
APL-CD	
33-10-10 31	A8970C2
AQ	
31-20-35 02	HWBUN1146D10B
31-20-35 03	HWBUN1146D10B
32-60-10 04	HWBUN1146D10B
AQ-DAC	
30-80-10 02	TD240-60S
24-90-01 05	25-8NF4661-1A
24-90-01 06	25-8NF4661-1A
30-80-10 03	25-8NF4661-1A
AQ-GG	
30-30-20 02	HA5N
30-40-15 07	HA5N

IDENT CH-SECT-UNIT-FIG	PART NUMBER
AQ-GG	
30-40-15 10	HA5N
30-40-15 11	HA5N
30-40-15 12	HA5N
AQL-CD	
33-10-10 31	A8970C1
AR	
30-80-10 02	NF0075-667
30-80-10 03	NF0075-667
AR-GG	
21-30-10 02	9330-4026
21-30-10 04	9330-4026
AS-GG	
79-30-10 02	TDA310
AT	
31-20-60 02	TP42000
AU	
31-20-60 02	695-4-27
AU-GG	
30-20-10 02	TDA310
AU-GG	
30-20-10 02	TDA310A
AU-R	
31-20-60 02	GTR42-10NACS1
31-20-60 02	6026-10-6SN
AV	
31-20-60 02	TP42000
AV-GG	
30-20-10 02	M12883-41-16
30-20-10 02	M300-1264
AW	
31-20-60 02	695-4-27
AW-CC	
28-41-10 02	6333-019-01A
28-41-10 03	6333-019-01A
AW-GG	
30-20-10 02	S3502-218
AW-R	
31-20-60 02	GTR42-10NACS1
31-20-60 02	6026-10-6SN
AX-CC	
32-60-10 04	99-230
AX-GG	
30-20-10 02	S3502-218
AY-CC	
32-60-10 04	99-230
AZ-CC	
32-60-10 04	99-230
A180	
22-10-40 53	622-6195-315
A626	

IDENT CH-SECT-UNIT-FIG	PART NUMBER
A626	
23-31-20 52	25-8RF4219-1A
A635	
22-10-40 53	6026-14-19SWC0* NDE
22-10-40 53	622-5027-001
A636	
22-10-40 53	6026-14-19SWC0* NDE
22-10-40 53	622-5027-001
B	
49-60-30 06	BYW54
49-60-30 08	BYW54
49-60-30 09	BYW54
49-60-30 11	BYW54
33-10-10 31	D38IN5K500RLIN
49-60-30 06	HWBUN1736S5B
49-60-30 08	HWBUN1736S5B
49-60-30 09	HWBUN1736S5B
49-60-30 11	HWBUN1736S5B
49-60-30 06	IN4005
49-60-30 08	IN4005
49-60-30 09	1N4005
49-60-30 11	1N4005
B-AP	
33-40-15 02	7064-4656
B-CAPT	
27-30-10 07	TJ12E02-02
27-30-10 08	TJ12E02-02
B-CC	
33-10-20 04	D38IN5K500RLIN
33-10-20 07	D38IN5K500RLIN
33-10-20 08	D38IN5K500RLIN
B-CN	
30-30-20 02	E37040S
B-CN-R	
30-30-20 02	GTR62-14MACS1
30-30-20 02	MS3476L14-12SN
B-CY	
31-50-01 04	25-8NF615-3A
31-50-01 07	25-8NF615-3A
31-50-01 08	25-8NF615-3A
31-50-01 09	25-8NF615-3A
31-50-01 14	25-8NF615-3A
B-D-XZ	
24-50-05 08	S6GN55
24-50-05 11	S6GN55
24-50-05 14	S6GN55
24-50-05 15	S6GN55
24-50-05 11	25-8NF2371-31A
24-50-05 14	25-8NF2371-31A

IDENT CH-SECT-UNIT-FIG	PART NUMBER
B-D-XZ	
24-50-05 15	25-8NF2371-31A
B-DAG	
30-40-15 07	HC921H0467-000
30-40-15 10	HC921H0467-000
B-DR	
30-30-20 02	HSA50-68R
B-FO	
27-30-10 07	TJ12E02-02
27-30-10 08	TJ12E02-02
B-J	
33-20-10 10	H1800C1
B-KL	
28-41-10 02	3515000-105
28-41-10 03	3515000-105
B-PQ	
32-60-10 04	5910-99-0115572
B-S1-DAL	
31-50-01 04	25-6NF693-3A
31-50-01 07	25-6NF693-3A
31-50-01 08	25-6NF693-3A
31-50-01 09	25-6NF693-3A
31-50-01 14	25-6NF693-3A
B-S3-DAL	
31-50-01 04	25-6NF693-3A
31-50-01 07	25-6NF693-3A
31-50-01 08	25-6NF693-3A
31-50-01 09	25-6NF693-3A
31-50-01 14	25-6NF693-3A
B-S5-DAL	
31-50-01 04	25-6NF693-3A
31-50-01 07	25-6NF693-3A
31-50-01 08	25-6NF693-3A
31-50-01 09	25-6NF693-3A
31-50-01 14	25-6NF693-3A
B-S6-DAL	
31-50-01 04	25-6NF693-3A
31-50-01 07	25-6NF693-3A
31-50-01 08	25-6NF693-3A
31-50-01 09	25-6NF693-3A
31-50-01 14	25-6NF693-3A
B-UC	
31-50-05 03	JS151
31-50-05 03	1HM1
B-WX	
31-50-05 03	B375-01
31-50-05 03	99-930
B-ZJ	
31-50-05 03	M12883-40-19
31-50-05 03	M400-1265
B-ZT	

IDENT CH-SECT-UNIT-FIG	PART NUMBER
B-ZT	
21-60-10 11	ERS015DJ000
BA-DAB	
30-10-10 11	HDD45F2H06
30-10-10 11	418538
BA-ZK	
24-21-17 03	HWBUN1146S10B
24-21-17 04	HWBUN1146S10B
24-30-20 02	HWBUN1146S10B
24-30-20 03	HWBUN1146S10B
24-50-01 05	HWBUN1146S10B
24-50-01 06	HWBUN1146S10B
24-50-01 07	HWBUN1146S10B
24-90-01 05	HWBUN1146S10B
24-90-01 06	HWBUN1146S10B
30-30-20 02	HWBUN1146S10B
49-60-30 06	HWBUN1146S10B
49-60-30 08	HWBUN1146S10B
49-60-30 09	HWBUN1146S10B
49-60-30 11	HWBUN1146S10B
73-20-10 03	HWBUN1146S10B
80-10-10 04	HWBUN1146S10B
BA1-P	
27-24-10 02	BAEREF000003205
31-20-35 03	BAEREF000003205
33-10-05 05	BAEREF000003205
33-10-05 07	BAEREF000003205
33-10-05 08	BAEREF000003205
33-10-05 09	BAEREF000003205
33-10-05 11	BAEREF000003205
33-10-05 05	GTR71-18NACS1
33-10-05 07	GTR71-18NACS1
33-10-05 08	GTR71-18NACS1
33-10-05 09	GTR71-18NACS1
33-10-05 11	GTR71-18NACS1
33-10-05 05	602GR133-18-1
33-10-05 11	602GR133-18-1
33-10-05 05	6027-18-32S
33-10-05 11	6027-18-32S
27-24-10 02	6027-18-32SNCO* NDB
31-20-35 03	6027-18-32SNCO* NDB
33-10-05 05	6027-18-32SNCO* NDB
33-10-05 07	6027-18-32SNCO* NDB
33-10-05 08	6027-18-32SNCO* NDB
33-10-05 09	6027-18-32SNCO* NDB

IDENT CH-SECT-UNIT-FIG	PART NUMBER
BA1-P	
33-10-05 11	6027-18-32SNC0* NDB
BA1-P	
27-24-10 03	BAEREF000003662
31-20-35 02	BAEREF000003662
27-24-10 03	GTR71-18NACS1
27-24-10 03	6026-18-32PNC0* NDB
31-20-35 02	6026-18-32PNC0* NDB
BA1-R	
27-24-10 02	BAEREF000003662
31-20-35 03	BAEREF000003662
33-10-05 05	BAEREF000003662
33-10-05 07	BAEREF000003662
33-10-05 08	BAEREF000003662
33-10-05 09	BAEREF000003662
33-10-05 11	BAEREF000003662
27-24-10 02	GTR71-18NACS1
27-24-10 02	6026-18-32PNC0* NDB
31-20-35 03	6026-18-32PNC0* NDB
33-10-05 05	6026-18-32PNC0* NDB
33-10-05 07	6026-18-32PNC0* NDB
33-10-05 08	6026-18-32PNC0* NDB
33-10-05 09	6026-18-32PNC0* NDB
33-10-05 11	6026-18-32PNC0* NDB
BA1-R	
27-24-10 03	BAEREF000003205
31-20-35 02	BAEREF000003205
27-24-10 03	6027-18-32SNC0* NDB
31-20-35 02	6027-18-32SNC0* NDB
BB-BA	
28-41-10 02	1HSN64
28-41-10 03	1HSN64
BB-DAB	
30-40-15 07	HDD45F2H06
30-40-15 10	HDD45F2H06
30-40-15 11	HDD45F2H06
30-40-15 12	HDD45F2H06
30-40-15 07	418539
30-40-15 10	418539

IDENT CH-SECT-UNIT-FIG	PART NUMBER
BB-DAB	
30-40-15 11	418539
30-40-15 12	418539
BB-ZK	
49-60-30 06	BYW54
49-60-30 08	BYW54
49-60-30 09	BYW54
49-60-30 11	BYW54
24-50-01 07	HWBUN1146S10B
24-90-01 05	HWBUN1146S10B
24-90-01 06	HWBUN1146S10B
30-30-20 02	HWBUN1146S10B
32-60-30 02	HWBUN1146S10B
32-60-30 03	HWBUN1146S10B
49-60-10 05	HWBUN1146S10B
49-60-30 06	HWBUN1146S10B
49-60-30 08	HWBUN1146S10B
49-60-30 09	HWBUN1146S10B
49-60-30 11	HWBUN1146S10B
80-10-10 04	HWBUN1146S10B
49-60-30 06	IN4005
49-60-30 08	IN4005
49-60-30 09	1N4005
49-60-30 11	1N4005
24-50-01 07	25-7NF1815-5A
BC	
32-60-20 02	C9032-001
BC-DAB	
30-40-15 07	HDD45F2H06
30-40-15 10	HDD45F2H06
30-40-15 11	HDD45F2H06
30-40-15 12	HDD45F2H06
30-40-15 07	418539
30-40-15 10	418539
30-40-15 11	418539
30-40-15 12	418539
BC-ZK	
73-20-01 05	HDS8SF3J03
73-20-01 05	RSE120074
BD-DAB	
24-50-01 05	HDS8SF3J03
24-50-01 06	HDS8SF3J03
24-50-01 07	HDS8SF3J03
24-50-01 05	RSE120074
24-50-01 06	RSE120074
24-50-01 07	RSE120074
BD-ZK	
73-20-02 05	HDS8SF3J03
73-20-02 05	RSE120074
BE-DAB	
24-50-01 05	HDS8SF3J03

IDENT CH-SECT-UNIT-FIG	PART NUMBER
BE-DAB	
24-50-01 07	HDS8SF3J03
24-50-01 05	RSE120074
24-50-01 07	RSE120074
BE-ZK	
24-30-10 02	M12883-41-16
24-30-20 02	M12883-41-16
24-30-20 03	M12883-41-16
24-50-01 05	M12883-41-16
24-50-01 06	M12883-41-16
24-50-01 07	M12883-41-16
49-60-30 06	M12883-41-16
49-60-30 08	M12883-41-16
49-60-30 09	M12883-41-16
49-60-30 11	M12883-41-16
24-30-10 02	M300-1264
24-30-20 02	M300-1264
24-30-20 03	M300-1264
24-50-01 05	M300-1264
24-50-01 06	M300-1264
24-50-01 07	M300-1264
49-60-30 06	M300-1264
49-60-30 08	M300-1264
49-60-30 09	M300-1264
49-60-30 11	M300-1264
BF-DAB	
21-60-10 08	HDS8SF3J03
21-60-10 10	HDS8SF3J03
21-60-10 11	HDS8SF3J03
21-60-10 08	RSE120074
21-60-10 10	RSE120074
21-60-10 11	RSE120074
BF-ZK	
73-20-10 03	M12883-41-16
73-20-10 03	M300-1264
BG-BA	
26-10-10 03	01-0923
BG-DAB	
21-60-10 08	HDS8SF3J03
21-60-10 10	HDS8SF3J03
21-60-10 11	HDS8SF3J03
21-60-10 08	RSE120074
21-60-10 10	RSE120074
21-60-10 11	RSE120074
BG-ZK	
80-10-10 04	M12883-41-16
80-10-10 04	M300-1264
BH-BA	
26-10-10 03	01-0923
BH-CG	
33-10-05 05	140-4538

IDENT CH-SECT-UNIT-FIG	PART NUMBER
BH-CG	
33-10-05 07	140-4538
33-10-05 08	140-4538
33-10-05 09	140-4538
33-10-05 11	140-4538
BH-DAB	
21-60-10 08	HDS8SF3J03
21-60-10 10	HDS8SF3J03
21-60-10 11	HDS8SF3J03
21-60-10 08	RSE120074
21-60-10 10	RSE120074
21-60-10 11	RSE120074
BH-ZK	
73-20-10 03	M12883-41-16
73-20-10 03	M300-1264
BJ	
32-60-20 02	C9032-001
BJ-DAB	
21-60-10 08	HDS8SF3J03
21-60-10 10	HDS8SF3J03
21-60-10 11	HDS8SF3J03
21-60-10 08	RSE120074
21-60-10 10	RSE120074
21-60-10 11	RSE120074
BJ-ZK	
24-50-01 05	M12883-41-16
24-50-01 06	M12883-41-16
24-50-01 07	M12883-41-16
24-50-01 05	M300-1264
24-50-01 06	M300-1264
24-50-01 07	M300-1264
BK	
33-10-05 05	25-8NF905-1A
33-10-05 07	25-8NF905-1A
33-10-05 08	25-8NF905-1A
33-10-05 09	25-8NF905-1A
33-10-05 11	25-8NF905-1A
33-10-05 05	6020-8-33PNCON* DD
33-10-05 07	6020-8-33PNCON* DD
33-10-05 08	6020-8-33PNCON* DD
33-10-05 09	6020-8-33PNCON* DD
33-10-05 11	6020-8-33PNCON* DD
33-10-05 05	6026-8-33SNCON* DD
33-10-05 07	6026-8-33SNCON* DD

IDENT CH-SECT-UNIT-FIG	PART NUMBER
BK	
33-10-05 08	6026-8-33SNCON* DD
33-10-05 09	6026-8-33SNCON* DD
33-10-05 11	6026-8-33SNCON* DD
BK-DAB	
21-60-10 08	HDS8SF3J03
21-60-10 10	HDS8SF3J03
21-60-10 11	HDS8SF3J03
21-60-10 08	RSE120074
21-60-10 10	RSE120074
21-60-10 11	RSE120074
BK-ZK	
24-50-01 05	M12883-41-16
24-50-01 06	M12883-41-16
24-50-01 07	M12883-41-16
24-50-01 05	M300-1264
24-50-01 06	M300-1264
24-50-01 07	M300-1264
BL	
33-10-05 05	25-8NF905-1A
33-10-05 07	25-8NF905-1A
33-10-05 08	25-8NF905-1A
33-10-05 09	25-8NF905-1A
33-10-05 11	25-8NF905-1A
33-10-05 05	6020-8-33PNCON* DD
33-10-05 07	6020-8-33PNCON* DD
33-10-05 08	6020-8-33PNCON* DD
33-10-05 09	6020-8-33PNCON* DD
33-10-05 11	6020-8-33PNCON* DD
33-10-05 05	6026-8-33SNCON* DD
33-10-05 07	6026-8-33SNCON* DD
33-10-05 08	6026-8-33SNCON* DD
33-10-05 09	6026-8-33SNCON* DD
33-10-05 11	6026-8-33SNCON* DD
BL-CC	
73-20-02 05	99-223
BL-CG	
33-10-05 05	1N5350B

IDENT CH-SECT-UNIT-FIG	PART NUMBER
BL-CG	
33-10-05 07	1N5350B
33-10-05 08	1N5350B
33-10-05 09	1N5350B
33-10-05 11	1N5350B
33-10-05 05	99-222
33-10-05 07	99-222
33-10-05 08	99-222
33-10-05 09	99-222
33-10-05 11	99-222
BL-DAB	
30-40-15 07	HDS8SF3J03
30-40-15 10	HDS8SF3J03
30-40-15 11	HDS8SF3J03
30-40-15 12	HDS8SF3J03
30-40-15 07	RSE120074
30-40-15 10	RSE120074
30-40-15 11	RSE120074
30-40-15 12	RSE120074
BM-BA	
27-30-10 07	1SX1T
27-61-20 04	1SX1T
BM-CC	
73-20-02 05	99-223
BM-CG	
33-10-05 05	140-4537
33-10-05 07	140-4537
33-10-05 09	140-4538
33-10-05 11	140-4538
33-10-05 08	404-8-02811-007
BM-DAB	
30-40-15 07	HDS8SF3J03
30-40-15 10	HDS8SF3J03
30-40-15 11	HDS8SF3J03
30-40-15 12	HDS8SF3J03
30-40-15 07	RSE120074
30-40-15 10	RSE120074
30-40-15 11	RSE120074
30-40-15 12	RSE120074
BM-ZK	
80-10-10 04	M12883-40-19
80-10-10 04	M400-1265
BN-BA	
21-31-10 07	25-8NF225A
21-31-10 07	601-4300
32-60-10 04	601-4300
BN-DAB	
28-41-10 02	HDS8SF3J03
28-41-10 03	HDS8SF3J03
28-41-10 02	RSE120074
28-41-10 03	RSE120074

IDENT CH-SECT-UNIT-FIG	PART NUMBER
BP-BA	
21-60-10 08	BZ2RQ1T04
21-60-10 10	BZ2RQ1T04
21-60-10 11	BZ2RQ1T04
BP-ZK	
27-00-10 03	M12883-41-16
27-00-10 04	M12883-41-16
32-60-30 02	M12883-41-16
32-60-30 03	M12883-41-16
27-00-10 03	M300-1264
27-00-10 04	M300-1264
32-60-30 02	M300-1264
32-60-30 03	M300-1264
BQ-BA	
80-10-10 04	6HM7-3
BR-BA	
80-10-10 04	6HM7-3
BR-ZK	
49-60-10 05	M12883-41-16
49-60-30 06	M12883-41-16
80-10-10 04	M12883-41-16
49-60-10 05	M300-1264
49-60-30 06	M300-1264
80-10-10 04	M300-1264
BS-ZK	
49-60-10 05	M12883-40-19
49-60-30 06	M12883-40-19
49-60-30 08	M12883-40-19
49-60-30 09	M12883-40-19
49-60-30 11	M12883-40-19
80-10-10 04	M12883-40-19
49-60-10 05	M300-1265
49-60-30 06	M400-1265
49-60-30 08	M400-1265
49-60-30 09	M400-1265
49-60-30 11	M400-1265
80-10-10 04	M400-1265
BU-ZK	
80-10-10 04	M12883-40-19
80-10-10 04	M400-1265
BV	
27-30-10 07	309-4316
27-30-10 08	309-4316
BV-BA	
27-61-20 04	25CXZ109-7
BX-BA	
27-61-20 04	25-7NF1815-5A
BX-ZK	
27-00-10 03	M12883-41-16
27-00-10 04	M12883-41-16
27-00-10 03	M300-1264

IDENT CH-SECT-UNIT-FIG	PART NUMBER
BX-ZK	
27-00-10 04	M300-1264
BY	
27-30-10 07	309-4316
27-30-10 08	309-4316
B1	
49-60-30 06	2B6-72
49-60-30 08	2B6-72
49-60-30 09	2B6-72
49-60-30 11	2B6-72
B1-DAB	
30-40-15 10	7MC1-201-10
30-40-15 11	7MC1-201-10
30-40-15 12	7MC1-201-10
B1-DAD	
24-53-10 06	483TCG11J25-3A
24-53-10 08	483TCG11J25-3A
24-21-17 03	483TCG11J5-3A
24-21-17 04	483TCG11J5-3A
B1-GG	
24-50-05 08	583-96TCK14-10A
24-50-05 11	583-96TCK14-10A
24-50-05 14	583-96TCK14-10A
24-50-05 15	583-96TCK14-10A
30-40-15 07	583-96TCK14-10A
30-40-15 10	583-96TCK14-10A
30-40-15 11	583-96TCK14-10A
30-40-15 12	583-96TCK14-10A
B1-XZ	
24-21-17 03	7MC1-202-10
24-21-17 04	7MC1-202-10
B1-ZK	
24-30-10 02	583-96TCK14-10A
24-50-05 08	583-96TCK14-10A
24-50-05 11	583-96TCK14-10A
24-50-05 14	583-96TCK14-10A
24-50-05 15	583-96TCK14-10A
B1-ZKA	
24-50-05 08	6TC14-10
24-50-05 11	6TC14-10
24-50-05 14	6TC14-10
24-50-05 15	6TC14-10
49-60-10 05	6TC14-10
B100-DAD	
24-50-05 08	483TCG11J25-3A
24-50-05 11	483TCG11J25-3A
24-50-05 14	483TCG11J25-3A
24-50-05 15	483TCG11J25-3A
27-24-10 02	483TCG11J25-3A
27-24-10 03	483TCG11J25-3A
B101-DAD	

IDENT CH-SECT-UNIT-FIG	PART NUMBER
B101-DAD	
24-50-05 08	483TCG11J25-3A
24-50-05 11	483TCG11J25-3A
24-50-05 14	483TCG11J25-3A
24-50-05 15	483TCG11J25-3A
30-80-10 02	483TCG11J25-3A
30-80-10 03	483TCG11J25-3A
B102-DAD	
24-50-05 08	483TCG11J25-3A
24-50-05 11	483TCG11J25-3A
24-50-05 14	483TCG11J25-3A
24-50-05 15	483TCG11J25-3A
32-60-10 04	483TCG11J25-3A
B103-DAD	
21-60-10 08	483TCG11J25-3A
21-60-10 10	483TCG11J25-3A
21-60-10 11	483TCG11J25-3A
24-50-05 08	483TCG11J25-3A
24-50-05 11	483TCG11J25-3A
24-50-05 14	483TCG11J25-3A
24-50-05 15	483TCG11J25-3A
B104-DAD	
21-31-10 07	483TCG11J25-3A
24-50-05 08	483TCG11J25-3A
24-50-05 11	483TCG11J25-3A
24-50-05 14	483TCG11J25-3A
24-50-05 15	483TCG11J25-3A
B105-DAD	
24-50-05 08	SPARE
24-50-05 11	SPARE
24-50-05 14	SPARE
24-50-05 15	SPARE
B106-DAD	
24-50-05 08	483TCG11J25-3A
24-50-05 11	483TCG11J25-3A
24-50-05 14	483TCG11J25-3A
24-50-05 15	483TCG11J25-3A
29-31-10 02	483TCG11J25-3A
B107-DAD	
24-50-05 08	483TCG11J25-3A
24-50-05 11	483TCG11J25-3A
24-50-05 14	483TCG11J25-3A
24-50-05 15	483TCG11J25-3A
31-20-60 02	483TCG11J25-3A
B108-DAD	
24-50-05 08	483TCG11J25-3A
24-50-05 11	483TCG11J25-3A
24-50-05 14	483TCG11J25-3A
24-50-05 15	483TCG11J25-3A
29-32-10 05	483TCG11J25-3A
B109-DAD	

IDENT CH-SECT-UNIT-FIG	PART NUMBER
B109-DAD	
24-50-05 08	SPARE
21-60-10 10	483TCG11J25-3A
21-60-10 11	483TCG11J25-3A
24-50-05 11	483TCG11J25-3A
24-50-05 14	483TCG11J25-3A
24-50-05 15	483TCG11J25-3A
B11-DAD	
24-53-10 06	483TCG11J25-3A
24-53-10 08	483TCG11J25-3A
27-33-00 05	483TCG11J85-3A
27-33-00 07	483TCG11J85-3A
B110-DAD	
24-50-05 08	483TCG11J25-2A
24-50-05 11	483TCG11J25-2A
24-50-05 14	483TCG11J25-2A
24-50-05 15	483TCG11J25-2A
30-10-10 11	483TCG11J25-2A
B111-DAD	
24-50-05 08	483TCG11J25-3A
24-50-05 11	483TCG11J25-3A
24-50-05 14	483TCG11J25-3A
24-50-05 15	483TCG11J25-3A
28-40-10 04	483TCG11J25-3A
28-40-10 05	483TCG11J25-3A
B112-DAD	
24-50-05 08	483TCG11J25-3A
24-50-05 11	483TCG11J25-3A
24-50-05 14	483TCG11J25-3A
24-50-05 15	483TCG11J25-3A
79-30-10 02	483TCG11J25-3A
B113-DAD	
24-50-05 08	483TCG11J25-3A
24-50-05 11	483TCG11J25-3A
24-50-05 14	483TCG11J25-3A
24-50-05 15	483TCG11J25-3A
79-30-10 02	483TCG11J25-3A
B114-DAD	
21-60-20 02	483TCG11J25-3A
21-60-20 03	483TCG11J25-3A
24-50-05 08	483TCG11J25-3A
24-50-05 11	483TCG11J25-3A
24-50-05 14	483TCG11J25-3A
24-50-05 15	483TCG11J25-3A
B115-DAD	
24-50-05 08	483TCG11J25-3A
24-50-05 11	483TCG11J25-3A
24-50-05 14	483TCG11J25-3A
24-50-05 15	483TCG11J25-3A
29-32-10 05	483TCG11J25-3A
B116-DAD	

IDENT CH-SECT-UNIT-FIG	PART NUMBER
B116-DAD	
24-50-01 05	483TCG11J25-3A
24-50-01 06	483TCG11J25-3A
24-50-01 07	483TCG11J25-3A
24-50-05 08	483TCG11J25-3A
24-50-05 11	483TCG11J25-3A
24-50-05 14	483TCG11J25-3A
24-50-05 15	483TCG11J25-3A
B117-DAD	
24-50-05 08	483TCG11J25-3A
24-50-05 11	483TCG11J25-3A
24-50-05 14	483TCG11J25-3A
24-50-05 15	483TCG11J25-3A
27-50-10 02	483TCG11J25-3A
B118-DAD	
24-50-05 08	483TCG11J25-3A
24-50-05 11	483TCG11J25-3A
24-50-05 14	483TCG11J25-3A
24-50-05 15	483TCG11J25-3A
30-10-10 11	483TCG11J25-3A
B119-DAD	
24-50-05 08	483TCG11J25-3A
24-50-05 11	483TCG11J25-3A
24-50-05 14	483TCG11J25-3A
24-50-05 15	483TCG11J25-3A
31-20-35 02	483TCG11J25-3A
31-20-35 03	483TCG11J25-3A
B12-DAD	
24-53-10 06	483TCG11J25-3A
24-53-10 08	483TCG11J25-3A
27-33-00 05	483TCG11J85-3A
27-33-00 07	483TCG11J85-3A
B120-DAD	
24-50-05 08	25-8NF2217-20
24-50-05 11	25-8NF2217-20
24-50-05 14	25-8NF2217-20
24-50-05 15	25-8NF2217-20
24-50-05 08	483-96TCK14-20A
24-50-05 11	483-96TCK14-20A
24-50-05 14	483-96TCK14-20A
24-50-05 15	483-96TCK14-20A
B121-DAD	
24-50-05 08	483TCG11J25-3A
24-50-05 11	483TCG11J25-3A
24-50-05 14	483TCG11J25-3A
24-50-05 15	483TCG11J25-3A
28-40-10 04	483TCG11J25-3A
28-40-10 05	483TCG11J25-3A
B122-DAD	
24-50-05 08	483TCG11J25-3A
24-50-05 11	483TCG11J25-3A

IDENT CH-SECT-UNIT-FIG	PART NUMBER
B122-DAD	
24-50-05 14	483TCG11J25-3A
24-50-05 15	483TCG11J25-3A
79-30-10 02	483TCG11J25-3A
B123-DAD	
24-50-05 08	483TCG11J25-3A
24-50-05 11	483TCG11J25-3A
24-50-05 14	483TCG11J25-3A
24-50-05 15	483TCG11J25-3A
79-30-10 02	483TCG11J25-3A
B124-DAD	
21-60-20 02	483TCG11J25-3A
21-60-20 03	483TCG11J25-3A
24-50-05 08	483TCG11J25-3A
24-50-05 11	483TCG11J25-3A
24-50-05 14	483TCG11J25-3A
24-50-05 15	483TCG11J25-3A
B125-DAD	
24-50-05 08	483TCG11J25-3A
24-50-05 11	483TCG11J25-3A
24-50-05 14	483TCG11J25-3A
24-50-05 15	483TCG11J25-3A
31-20-60 02	483TCG11J25-3A
B126-DAD	
24-50-05 08	SPARE
24-50-05 11	SPARE
24-50-05 14	SPARE
24-50-05 15	SPARE
B127-DAD	
24-50-05 08	SPARE
B127-DAD	
24-50-05 11	25-8NF2217-15
24-50-05 14	25-8NF2217-15
24-50-05 15	25-8NF2217-15
24-50-05 11	483-96TCK14-15A
24-50-05 14	483-96TCK14-15A
24-50-05 15	483-96TCK14-15A
B127-DAD	
49-60-30 06	25-8NF2217-10
49-60-30 08	25-8NF2217-10
49-60-30 09	25-8NF2217-10
49-60-30 11	25-8NF2217-10
49-60-30 06	483-96TCK14-10A
49-60-30 08	483-96TCK14-10A
49-60-30 09	483-96TCK14-10A
49-60-30 11	483-96TCK14-10A
B128-DAD	
24-50-05 08	SPARE
24-50-05 11	483TCG11J25-5A
24-50-05 14	483TCG11J25-5A
24-50-05 15	483TCG11J25-5A

IDENT CH-SECT-UNIT-FIG	PART NUMBER
B128-DAD	
49-60-30 06	25-8NF2217-10
49-60-30 08	25-8NF2217-10
49-60-30 09	25-8NF2217-10
49-60-30 11	25-8NF2217-10
49-60-30 06	483-96TCK14-10A
49-60-30 08	483-96TCK14-10A
49-60-30 09	483-96TCK14-10A
49-60-30 11	483-96TCK14-10A
B129-DAD	
24-50-05 08	SPARE
24-50-05 11	483TCG11J25-3A
24-50-05 14	483TCG11J25-3A
24-50-05 15	483TCG11J25-3A
B13-DAD	
24-50-05 08	483TCG11J25-3A
24-50-05 11	483TCG11J25-3A
24-50-05 14	483TCG11J25-3A
24-50-05 15	483TCG11J25-3A
27-33-00 05	483TCG11J85-3A
27-33-00 07	483TCG11J85-3A
B130-DAD	
24-50-05 08	SPARE
24-50-05 11	483TCG11J25-3A
24-50-05 14	483TCG11J25-3A
24-50-05 15	483TCG11J25-3A
B131-DAD	
21-20-10 03	483TCG11J25-5A
24-50-05 08	483TCG11J25-5A
24-50-05 11	483TCG11J25-5A
24-50-05 14	483TCG11J25-5A
24-50-05 15	483TCG11J25-5A
B132-DAD	
24-50-05 08	25-8NF2217-15
24-50-05 11	25-8NF2217-15
24-50-05 14	25-8NF2217-15
24-50-05 15	25-8NF2217-15
24-50-05 08	483-96TCK14-15A
24-50-05 11	483-96TCK14-15A
24-50-05 14	483-96TCK14-15A
24-50-05 15	483-96TCK14-15A
B132-DAD	
21-20-10 03	25-8NF2217-15
21-20-10 03	483-96TCK14-15A
B14-DAD	
24-50-05 08	483TCG11J25-5A
24-50-05 11	483TCG11J25-5A
24-50-05 14	483TCG11J25-5A
24-50-05 15	483TCG11J25-5A
27-33-00 05	483TCG11J85-5A
27-33-00 07	483TCG11J85-5A

IDENT CH-SECT-UNIT-FIG	PART NUMBER
B143-DAD	
33-20-10 10	483TCG11J25-3A
B144-DAD	
24-50-07 67	25-8NF2217-15
33-30-15 07	25-8NF2217-15
33-30-15 07	482-96TCK14-15A
24-50-07 67	483-96TCK14-15A
B148-DAD	
26-10-20 02	483TCG11J25-1A
B15-DAD	
24-50-05 08	483TCG11J25-5A
24-50-05 11	483TCG11J25-5A
24-50-05 14	483TCG11J25-5A
24-50-05 15	483TCG11J25-5A
27-33-00 05	483TCG11J85-5A
27-33-00 07	483TCG11J85-5A
B151-DAD	
24-50-07 67	25-8NF2217-15
33-40-15 02	25-8NF2217-15
24-50-07 67	483-96TCK14-15A
33-40-15 02	483-96TCK14-15A
B152-DAD	
24-50-07 67	25-8NF2217-15
33-40-15 02	25-8NF2217-15
24-50-07 67	483-96TCK14-15A
33-40-15 02	483-96TCK14-15A
B16-DAD	
24-50-05 08	483TCG11J25-5A
24-50-05 11	483TCG11J25-5A
24-50-05 14	483TCG11J25-5A
24-50-05 15	483TCG11J25-5A
27-33-00 05	483TCG11J85-5A
27-33-00 07	483TCG11J85-5A
B161-DAD	
78-30-05 01	483TCG11J25-5A
78-30-05 02	483TCG11J25-5A
B162-DAD	
78-30-05 01	483TCG11J25-1A
78-30-05 02	483TCG11J25-1A
B163-DAD	
78-30-05 01	483TCG11J25-5A
B163-DAD	
78-30-05 02	483TCG11J25-3A
B164-DAD	
78-30-05 01	483TCG11J25-5A
78-30-05 02	483TCG11J25-5A
B165-DAD	
78-30-05 01	483TCG11J25-1A
78-30-05 02	483TCG11J25-1A
B166-DAD	
78-30-05 01	483TCG11J25-5A

IDENT CH-SECT-UNIT-FIG	PART NUMBER
B166-DAD	
78-30-05 02	483TCG11J25-3A
B17-DAD	
24-50-05 08	483TCG11J25-5A
24-50-05 11	483TCG11J25-5A
24-50-05 14	483TCG11J25-5A
24-50-05 15	483TCG11J25-5A
27-33-00 05	483TCG11J85-5A
27-33-00 07	483TCG11J85-5A
B171-DAD	
30-40-15 07	583-96TCK14-10A
B172-DAD	
30-40-15 07	583-96TCK14-10A
B18-DAD	
24-50-05 08	483TCG11J25-3A
24-50-05 11	483TCG11J25-3A
24-50-05 14	483TCG11J25-3A
24-50-05 15	483TCG11J25-3A
34-13-01 04	483TCG11J25-3A
34-13-01 08	483TCG11J25-3A
B19-DAD	
24-50-05 08	483TCG11J25-3A
24-50-05 11	483TCG11J25-3A
24-50-05 14	483TCG11J25-3A
24-50-05 15	483TCG11J25-3A
24-21-17 03	483TCG11J5-3A
24-21-17 04	483TCG11J5-3A
B2-DAB	
30-40-15 10	7MC1-201-10
30-40-15 11	7MC1-201-10
30-40-15 12	7MC1-201-10
B2-DAD	
24-53-10 06	483TCG11J25-3A
33-10-20 04	483TCG11J25-3A
33-10-20 07	483TCG11J25-3A
24-50-05 15	483TCG11J25-5A
33-10-20 08	483TCG11J25-5A
B2-GG	
24-50-05 08	583-96TCK14-10A
24-50-05 11	583-96TCK14-10A
24-50-05 14	583-96TCK14-10A
24-50-05 15	583-96TCK14-10A
30-40-15 07	583-96TCK14-10A
30-40-15 10	583-96TCK14-10A
30-40-15 11	583-96TCK14-10A
30-40-15 12	583-96TCK14-10A
B2-XZ	
24-21-17 03	7MC1-202-10
24-21-17 04	7MC1-202-10
B2-ZK	
24-30-20 02	583-96TCK14-10A

IDENT CH-SECT-UNIT-FIG	PART NUMBER
B2-ZK	
24-50-05 08	583-96TCK14-10A
24-50-05 11	583-96TCK14-10A
24-50-05 14	583-96TCK14-10A
24-50-05 15	583-96TCK14-10A
B20-DAD	
24-50-05 08	483TCG11J25-3A
24-50-05 11	483TCG11J25-3A
24-50-05 14	483TCG11J25-3A
24-50-05 15	483TCG11J25-3A
27-30-10 07	483TCG11J5-3A
27-30-10 08	483TCG11J5-3A
B21-DAD	
24-50-05 08	483TCG11J25-5A
24-50-05 11	483TCG11J25-5A
24-50-05 14	483TCG11J25-5A
24-50-05 15	483TCG11J25-5A
26-20-10 03	483TCG11J25-5A
B22-DAD	
24-50-05 08	483TCG11J25-3A
24-50-05 11	483TCG11J25-3A
24-50-05 14	483TCG11J25-3A
24-50-05 15	483TCG11J25-3A
26-10-10 03	483TCG11J25-3A
B23-DAD	
21-60-10 08	483TCG11J25-3A
21-60-10 10	483TCG11J25-3A
21-60-10 11	483TCG11J25-3A
24-50-05 08	483TCG11J25-3A
24-50-05 11	483TCG11J25-3A
24-50-05 14	483TCG11J25-3A
24-50-05 15	483TCG11J25-3A
B24-DAD	
24-50-05 08	483TCG11J25-1A
24-50-05 11	483TCG11J25-1A
24-50-05 14	483TCG11J25-1A
24-50-05 15	483TCG11J25-1A
31-50-01 04	483TCG11J25-1A
31-50-01 07	483TCG11J25-1A
31-50-01 08	483TCG11J25-1A
31-50-01 09	483TCG11J25-1A
31-50-01 14	483TCG11J25-1A
B25-DAD	
24-50-05 08	483TCG11J25-3A
24-50-05 11	483TCG11J25-3A
24-50-05 14	483TCG11J25-3A
24-50-05 15	483TCG11J25-3A
28-41-10 02	483TCG11J25-3A
28-41-10 03	483TCG11J25-3A
B26-DAD	
24-50-05 08	25-8NF2217-25

IDENT CH-SECT-UNIT-FIG	PART NUMBER
B26-DAD	
24-50-05 11	25-8NF2217-25
24-50-05 14	25-8NF2217-25
24-50-05 15	25-8NF2217-25
28-21-05 02	25-8NF2217-25
28-21-05 03	25-8NF2217-25
28-21-05 04	25-8NF2217-25
24-50-05 08	483-96TCK14-25A
24-50-05 11	483-96TCK14-25A
24-50-05 14	483-96TCK14-25A
24-50-05 15	483-96TCK14-25A
28-21-05 02	483-96TCK14-25A
28-21-05 03	483-96TCK14-25A
28-21-05 04	483-96TCK14-25A
B27-DAD	
24-50-05 08	25-8NF2217-25
24-50-05 11	25-8NF2217-25
24-50-05 14	25-8NF2217-25
24-50-05 15	25-8NF2217-25
28-21-05 02	25-8NF2217-25
28-21-05 03	25-8NF2217-25
28-21-05 04	25-8NF2217-25
24-50-05 08	483-96TCK14-25A
24-50-05 11	483-96TCK14-25A
24-50-05 14	483-96TCK14-25A
24-50-05 15	483-96TCK14-25A
28-21-05 02	483-96TCK14-25A
28-21-05 03	483-96TCK14-25A
28-21-05 04	483-96TCK14-25A
B28-DAD	
24-50-05 08	483TCG11J25-3A
24-50-05 11	483TCG11J25-3A
24-50-05 14	483TCG11J25-3A
24-50-05 15	483TCG11J25-3A
28-21-05 02	483TCG11J25-3A
28-21-05 03	483TCG11J25-3A
28-21-05 04	483TCG11J25-3A
B3-CAPT	
27-30-10 07	1841-1-5620
27-30-10 08	1841-1-5620
B3-DAB	
30-40-15 10	7MC1-201-10
30-40-15 11	7MC1-201-10
30-40-15 12	7MC1-201-10
B3-DAD	
24-53-10 06	483TCG11J25-3A
33-10-20 04	483TCG11J25-3A
33-10-20 07	483TCG11J25-3A
24-50-05 15	483TCG11J25-5A
33-10-20 08	483TCG11J25-5A
B3-FO	

IDENT CH-SECT-UNIT-FIG	PART NUMBER
B3-FO	
27-30-10 07	1841-1-5620
27-30-10 08	1841-1-5620
B3-GG	
30-40-20 03	583-96TCK14-3A
30-40-20 05	583-96TCK14-3A
B3-XZ	
30-30-20 02	483TCG11J25-5A
B3-ZK	
24-30-20 03	583-96TCK14-10A
B30-DAD	
24-50-05 08	483TCG11J25-5A
24-50-05 11	483TCG11J25-5A
24-50-05 14	483TCG11J25-5A
24-50-05 15	483TCG11J25-5A
30-20-10 02	483TCG11J25-5A
B31-DAD	
24-50-05 08	483TCG11J25-5A
24-50-05 11	483TCG11J25-5A
24-50-05 14	483TCG11J25-5A
24-50-05 15	483TCG11J25-5A
26-20-10 03	483TCG11J25-5A
B32-DAD	
24-50-05 08	SPARE
24-50-05 11	SPARE
24-50-05 14	SPARE
24-50-05 15	SPARE
B33-DAD	
24-50-05 08	483TCG11J25-5A
24-50-05 11	483TCG11J25-5A
24-50-05 14	483TCG11J25-5A
24-50-05 15	483TCG11J25-5A
31-50-01 04	483TCG11J25-5A
31-50-01 07	483TCG11J25-5A
31-50-01 08	483TCG11J25-5A
31-50-01 09	483TCG11J25-5A
31-50-01 14	483TCG11J25-5A
B34-DAD	
24-50-05 08	483TCG11J25-1A
24-50-05 11	483TCG11J25-1A
24-50-05 14	483TCG11J25-1A
24-50-05 15	483TCG11J25-1A
31-50-01 04	483TCG11J25-1A
31-50-01 07	483TCG11J25-1A
31-50-01 08	483TCG11J25-1A
31-50-01 09	483TCG11J25-1A
31-50-01 14	483TCG11J25-1A
B35-DAD	
24-50-05 08	483TCG11J25-3A
24-50-05 11	483TCG11J25-3A
24-50-05 14	483TCG11J25-3A

IDENT CH-SECT-UNIT-FIG	PART NUMBER
B35-DAD	
24-50-05 15	483TCG11J25-3A
28-41-20 03	483TCG11J25-3A
B36-DAD	
24-50-05 08	25-8NF2217-25
24-50-05 11	25-8NF2217-25
24-50-05 14	25-8NF2217-25
24-50-05 15	25-8NF2217-25
28-21-05 02	25-8NF2217-25
28-21-05 03	25-8NF2217-25
28-21-05 04	25-8NF2217-25
24-50-05 08	483-96TCK14-25A
24-50-05 11	483-96TCK14-25A
24-50-05 14	483-96TCK14-25A
24-50-05 15	483-96TCK14-25A
28-21-05 02	483-96TCK14-25A
28-21-05 03	483-96TCK14-25A
28-21-05 04	483-96TCK14-25A
B37-DAD	
24-50-05 08	25-8NF2217-25
24-50-05 11	25-8NF2217-25
24-50-05 14	25-8NF2217-25
24-50-05 15	25-8NF2217-25
28-21-05 02	25-8NF2217-25
28-21-05 03	25-8NF2217-25
28-21-05 04	25-8NF2217-25
24-50-05 08	483-96TCK14-25A
24-50-05 11	483-96TCK14-25A
24-50-05 14	483-96TCK14-25A
24-50-05 15	483-96TCK14-25A
28-21-05 02	483-96TCK14-25A
28-21-05 03	483-96TCK14-25A
28-21-05 04	483-96TCK14-25A
B38-DAD	
24-50-05 08	483TCG11J25-3A
24-50-05 11	483TCG11J25-3A
24-50-05 14	483TCG11J25-3A
24-50-05 15	483TCG11J25-3A
28-21-05 02	483TCG11J25-3A
28-21-05 03	483TCG11J25-3A
28-21-05 04	483TCG11J25-3A
B4-CAPT	
27-30-10 07	1841-1-5620
27-30-10 08	1841-1-5620
B4-DAB	
30-40-15 10	7MC1-201-10
30-40-15 11	7MC1-201-10
30-40-15 12	7MC1-201-10
B4-FD	
27-30-10 07	1841-1-5620
27-30-10 08	1841-1-5620

IDENT CH-SECT-UNIT-FIG	PART NUMBER
B4-GA	
24-50-05 08	SPARE
80-10-10 04	483TCG11J5-5A
B4-GG	
30-40-20 03	583-96TCK14-3A
30-40-20 05	583-96TCK14-3A
B4-XZ	
30-30-20 02	483TCG11J25-5A
B4-ZK	
24-50-05 08	483TCG11J5-5A
24-50-05 11	483TCG11J5-5A
24-50-05 14	483TCG11J5-5A
24-50-05 15	483TCG11J5-5A
B40-DAD	
24-50-05 08	483TCG11J25-5A
24-50-05 11	483TCG11J25-5A
24-50-05 14	483TCG11J25-5A
24-50-05 15	483TCG11J25-5A
30-20-10 02	483TCG11J25-5A
B41-DAD	
21-60-10 08	483TCG11J25-3A
21-60-10 10	483TCG11J25-3A
21-60-10 11	483TCG11J25-3A
24-50-05 08	483TCG11J25-3A
24-50-05 11	483TCG11J25-3A
24-50-05 14	483TCG11J25-3A
24-50-05 15	483TCG11J25-3A
B42-DAD	
21-60-10 08	483TCG11J25-3A
21-60-10 10	483TCG11J25-3A
21-60-10 11	483TCG11J25-3A
24-50-05 08	483TCG11J25-3A
24-50-05 11	483TCG11J25-3A
24-50-05 14	483TCG11J25-3A
24-50-05 15	483TCG11J25-3A
B43-DAD	
21-60-10 08	483TCG11J25-3A
21-60-10 10	483TCG11J25-3A
21-60-10 11	483TCG11J25-3A
24-50-05 08	483TCG11J25-3A
24-50-05 11	483TCG11J25-3A
24-50-05 14	483TCG11J25-3A
24-50-05 15	483TCG11J25-3A
B44-DAD	
24-50-05 08	25-8NF2217-15
24-50-05 11	25-8NF2217-15
24-50-05 14	25-8NF2217-15
24-50-05 15	25-8NF2217-15
30-30-31 02	25-8NF2217-15
24-50-05 08	483-96TCK14-15A
24-50-05 11	483-96TCK14-15A

IDENT CH-SECT-UNIT-FIG	PART NUMBER
B44-DAD	
24-50-05 14	483-96TCK14-15A
24-50-05 15	483-96TCK14-15A
30-30-31 02	483-96TCK14-15A
B45-DAD	
24-50-05 08	483TCG11J25-5A
24-50-05 11	483TCG11J25-5A
24-50-05 14	483TCG11J25-5A
24-50-05 15	483TCG11J25-5A
30-30-10 02	483TCG11J25-5A
B46-DAD	
24-50-05 08	483TCG11J25-2A
24-50-05 11	483TCG11J25-2A
24-50-05 14	483TCG11J25-2A
24-50-05 15	483TCG11J25-2A
30-40-15 07	483TCG11J25-2A
30-40-15 10	483TCG11J25-2A
30-40-15 11	483TCG11J25-2A
30-40-15 12	483TCG11J25-2A
B47-DAD	
24-50-05 08	483TCG11J25-2A
24-50-05 11	483TCG11J25-2A
24-50-05 14	483TCG11J25-2A
24-50-05 15	483TCG11J25-2A
30-40-20 03	483TCG11J25-2A
30-40-20 05	483TCG11J25-2A
B48-DAD	
24-50-05 08	483TCG11J25-3A
24-50-05 11	483TCG11J25-3A
24-50-05 14	483TCG11J25-3A
24-50-05 15	483TCG11J25-3A
27-24-10 02	483TCG11J25-3A
27-24-10 03	483TCG11J25-5A
B49-DAD	
24-50-05 08	483TCG11J25-3A
24-50-05 11	483TCG11J25-3A
24-50-05 14	483TCG11J25-3A
24-50-05 15	483TCG11J25-3A
27-24-10 02	483TCG11J25-3A
27-24-10 03	483TCG11J25-3A
B5-CAPT	
27-30-10 07	1841-1-5620
27-30-10 08	1841-1-5620
B5-DAB	
30-40-15 10	7MC1-201-10
30-40-15 11	7MC1-201-10
30-40-15 12	7MC1-201-10
B5-DAD	
24-53-10 06	483TCG11J25-3A
33-10-20 04	483TCG11J25-3A
33-10-20 07	483TCG11J25-3A

IDENT CH-SECT-UNIT-FIG	PART NUMBER
B5-DAD	
24-50-05 15	483TCG11J25-5A
33-10-20 08	483TCG11J25-5A
B5-FO	
27-30-10 07	1841-1-5620
27-30-10 08	1841-1-5620
B5-GA	
24-50-05 08	3TC2-35
24-50-05 11	3TC2-35
24-50-05 14	3TC2-35
24-50-05 15	3TC2-35
B5-XZ	
30-30-20 02	483TCG11J25-5A
B50-DAD	
24-50-05 08	483TCG11J25-5A
24-50-05 11	483TCG11J25-5A
24-50-05 14	483TCG11J25-5A
24-50-05 15	483TCG11J25-5A
30-10-10 11	483TCG11J25-5A
B51-DAD	
21-60-10 08	483TCG11J25-3A
21-60-10 10	483TCG11J25-3A
21-60-10 11	483TCG11J25-3A
24-50-05 08	483TCG11J25-3A
24-50-05 11	483TCG11J25-3A
24-50-05 14	483TCG11J25-3A
24-50-05 15	483TCG11J25-3A
B52-DAD	
21-60-10 08	483TCG11J25-3A
21-60-10 10	483TCG11J25-3A
21-60-10 11	483TCG11J25-3A
24-50-05 08	483TCG11J25-3A
24-50-05 11	483TCG11J25-3A
24-50-05 14	483TCG11J25-3A
24-50-05 15	483TCG11J25-3A
B53-DAD	
21-60-10 08	483TCG11J25-3A
21-60-10 10	483TCG11J25-3A
21-60-10 11	483TCG11J25-3A
24-50-05 08	483TCG11J25-3A
24-50-05 11	483TCG11J25-3A
24-50-05 14	483TCG11J25-3A
24-50-05 15	483TCG11J25-3A
B54-DAD	
24-50-05 08	25-8NF2217-15
24-50-05 11	25-8NF2217-15
24-50-05 14	25-8NF2217-15
24-50-05 15	25-8NF2217-15
30-30-31 02	25-8NF2217-15
24-50-05 08	483-96TCK14-15A
24-50-05 11	483-96TCK14-15A

IDENT CH-SECT-UNIT-FIG	PART NUMBER
B54-DAD	
24-50-05 14	483-96TCK14-15A
24-50-05 15	483-96TCK14-15A
30-30-31 02	483-96TCK14-15A
B55-DAD	
24-50-05 08	483TCG11J25-5A
24-50-05 11	483TCG11J25-5A
24-50-05 14	483TCG11J25-5A
24-50-05 15	483TCG11J25-5A
30-30-10 02	483TCG11J25-5A
B56-DAD	
24-50-05 08	483TCG11J25-2A
24-50-05 11	483TCG11J25-2A
24-50-05 14	483TCG11J25-2A
24-50-05 15	483TCG11J25-2A
30-40-15 07	483TCG11J25-2A
30-40-15 10	483TCG11J25-2A
30-40-15 11	483TCG11J25-2A
30-40-15 12	483TCG11J25-2A
B57-DAD	
24-50-05 08	483TCG11J25-2A
24-50-05 11	483TCG11J25-2A
24-50-05 14	483TCG11J25-2A
24-50-05 15	483TCG11J25-2A
30-40-20 03	483TCG11J25-2A
30-40-20 05	483TCG11J25-2A
B58-DAD	
24-50-05 08	483TCG11J25-3A
24-50-05 11	483TCG11J25-3A
24-50-05 14	483TCG11J25-3A
24-50-05 15	483TCG11J25-3A
27-24-10 02	483TCG11J25-3A
27-24-10 03	483TCG11J25-5A
B59-DAD	
24-50-05 08	483TCG11J25-3A
24-50-05 11	483TCG11J25-3A
24-50-05 14	483TCG11J25-3A
24-50-05 15	483TCG11J25-3A
27-24-10 02	483TCG11J25-3A
27-24-10 03	483TCG11J25-3A
B6-CAPT	
27-30-10 07	1841-1-5620
27-30-10 08	1841-1-5620
B6-DAB	
30-40-15 10	7MC1-201-10
30-40-15 11	7MC1-201-10
30-40-15 12	7MC1-201-10
B6-DAD	
24-53-10 06	483TCG11J25-3A
33-10-05 05	483TCG11J25-3A
33-10-05 07	483TCG11J25-3A

IDENT CH-SECT-UNIT-FIG	PART NUMBER
B6-DAD	
33-10-05 08	483TCG11J25-3A
33-10-05 09	483TCG11J25-3A
24-50-05 15	483TCG11J25-5A
33-10-05 11	483TCG11J25-5A
B6-FD	
27-30-10 07	1841-1-5620
27-30-10 08	1841-1-5620
B6-GA	
24-50-05 08	3TC2-35
24-50-05 11	3TC2-35
24-50-05 14	3TC2-35
24-50-05 15	3TC2-35
B6-XZ	
30-30-20 02	483TCG11J25-5A
B60-DAD	
24-50-05 08	483TCG11J25-3A
24-50-05 11	483TCG11J25-3A
24-50-05 14	483TCG11J25-3A
24-50-05 15	483TCG11J25-3A
32-60-30 02	483TCG11J25-3A
32-60-30 03	483TCG11J25-3A
B61-DAD	
24-50-05 08	25-8NF2217-7
24-50-05 11	25-8NF2217-7
24-50-05 14	25-8NF2217-7
33-40-10 06	25-8NF2217-7
24-50-05 08	483-96TCK14-7-*5A
24-50-05 11	483-96TCK14-7-*5A
24-50-05 14	483-96TCK14-7-*5A
33-40-10 06	483-96TCK14-7-*5A
B61-DAD	
24-50-05 15	25-8NF2217-7
24-50-05 15	483-96TCK14-7-*5A
B61-DAD	
33-40-10 05	25-8NF2217-7
33-40-10 05	483-96TCK14-7-*5A
B62-DAD	
33-40-10 05	D33107
33-40-10 06	D33107
24-50-05 08	25-8NF2217-7
24-50-05 11	25-8NF2217-7
24-50-05 14	25-8NF2217-7
33-40-10 05	25-8NF823-7
33-40-10 06	25-8NF823-7

IDENT CH-SECT-UNIT-FIG	PART NUMBER
B62-DAD	
24-50-05 08	483-96TCK14-7-* 5A
24-50-05 11	483-96TCK14-7-* 5A
24-50-05 14	483-96TCK14-7-* 5A
B62-DAD	
24-50-05 15	25-8NF2217-7
24-50-05 15	483-96TCK14-7-* 5A
B63-DAD	
24-50-05 08	25-8NF2217-15
24-50-05 11	25-8NF2217-15
24-50-05 14	25-8NF2217-15
24-50-05 15	25-8NF2217-15
33-40-20 04	25-8NF2217-15
24-50-05 08	483-96TCK14-15A
24-50-05 11	483-96TCK14-15A
24-50-05 14	483-96TCK14-15A
24-50-05 15	483-96TCK14-15A
33-40-20 04	483-96TCK14-15A
B64-DAD	
24-50-05 08	483TCG11J25-5A
24-50-05 11	483TCG11J25-5A
24-50-05 14	483TCG11J25-5A
24-50-05 15	483TCG11J25-5A
33-40-20 04	483TCG11J25-5A
B65-DAD	
24-50-05 08	SPARE
24-50-05 11	SPARE
24-50-05 14	SPARE
24-50-05 15	SPARE
B66-DAD	
24-50-05 08	483TCG11J25-5A
24-50-05 11	483TCG11J25-5A
24-50-05 14	483TCG11J25-5A
24-50-05 15	483TCG11J25-5A
33-10-05 05	483TCG11J25-5A
33-10-05 07	483TCG11J25-5A
33-10-05 08	483TCG11J25-5A
33-10-05 09	483TCG11J25-5A
B67-DAD	
24-50-05 08	483TCG11J25-3A
24-50-05 11	483TCG11J25-3A
24-50-05 14	483TCG11J25-3A
24-50-05 15	483TCG11J25-3A
33-10-05 05	483TCG11J25-3A
33-10-05 07	483TCG11J25-3A
33-10-05 08	483TCG11J25-3A
33-10-05 09	483TCG11J25-3A

IDENT CH-SECT-UNIT-FIG	PART NUMBER
B67-DAD	
33-10-05 11	483TCG11J25-3A
B68-DAD	
24-50-05 08	483TCG11J25-5A
24-50-05 11	483TCG11J25-5A
24-50-05 14	483TCG11J25-5A
24-50-05 15	483TCG11J25-5A
33-10-05 05	483TCG11J25-5A
33-10-05 07	483TCG11J25-5A
33-10-05 08	483TCG11J25-5A
33-10-05 09	483TCG11J25-5A
33-10-05 11	483TCG11J25-5A
B69-DAD	
24-50-05 08	483TCG11J25-3A
24-50-05 11	483TCG11J25-3A
24-50-05 14	483TCG11J25-3A
24-50-05 15	483TCG11J25-3A
33-10-05 05	483TCG11J25-3A
33-10-05 07	483TCG11J25-3A
33-10-05 08	483TCG11J25-3A
33-10-05 09	483TCG11J25-3A
33-10-05 11	483TCG11J25-3A
B7-CAPT	
27-30-10 07	1841-1-5620
27-30-10 08	1841-1-5620
B7-DAD	
21-30-10 02	483TCG11J25-2A
21-30-10 04	483TCG11J25-2A
24-53-10 06	483TCG11J25-2A
24-53-10 08	483TCG11J25-2A
B7-FO	
27-30-10 07	1841-1-5620
27-30-10 08	1841-1-5620
B70-DAD	
24-50-05 08	SPARE
24-50-05 11	SPARE
24-50-05 14	SPARE
24-50-05 15	SPARE
B71-DAD	
33-40-10 05	463TCG11J25-5A
33-40-10 06	463TCG11J25-5A
24-50-05 08	483TCG11J25-5A
24-50-05 11	483TCG11J25-5A
24-50-05 14	483TCG11J25-5A
24-50-05 15	483TCG11J25-5A
B72-DAD	
24-50-05 08	483TCG11J25-3A
24-50-05 11	483TCG11J25-3A
24-50-05 14	483TCG11J25-3A
24-50-05 15	483TCG11J25-3A
33-40-30 03	483TCG11J25-3A

IDENT CH-SECT-UNIT-FIG	PART NUMBER
B73-DAD	
24-50-05 08	25-8NF2217-15
24-50-05 11	25-8NF2217-15
24-50-05 14	25-8NF2217-15
24-50-05 15	25-8NF2217-15
33-40-20 04	25-8NF2217-15
24-50-05 08	483-96TCK14-15A
24-50-05 11	483-96TCK14-15A
24-50-05 14	483-96TCK14-15A
24-50-05 15	483-96TCK14-15A
33-40-20 04	483-96TCK14-15A
B74-DAD	
24-50-05 08	483TCG11J25-5A
24-50-05 11	483TCG11J25-5A
24-50-05 14	483TCG11J25-5A
24-50-05 15	483TCG11J25-5A
33-40-20 04	483TCG11J25-5A
B75-DAD	
24-50-05 08	SPARE
24-50-05 11	SPARE
24-50-05 14	SPARE
24-50-05 15	SPARE
B76-DAD	
24-50-05 08	483TCG11J25-5A
24-50-05 11	483TCG11J25-5A
24-50-05 14	483TCG11J25-5A
24-50-05 15	483TCG11J25-5A
33-10-05 05	483TCG11J25-5A
33-10-05 07	483TCG11J25-5A
33-10-05 08	483TCG11J25-5A
33-10-05 09	483TCG11J25-5A
33-10-05 11	483TCG11J25-5A
B77-DAD	
24-50-05 08	483TCG11J25-5A
24-50-05 11	483TCG11J25-5A
24-50-05 14	483TCG11J25-5A
24-50-05 15	483TCG11J25-5A
33-10-20 04	483TCG11J25-5A
33-10-20 07	483TCG11J25-5A
33-10-20 08	483TCG11J25-5A
B78-DAD	
24-50-05 08	483TCG11J25-5A
24-50-05 11	483TCG11J25-5A
24-50-05 14	483TCG11J25-5A
24-50-05 15	483TCG11J25-5A
33-10-05 05	483TCG11J25-5A
33-10-05 07	483TCG11J25-5A
33-10-05 08	483TCG11J25-5A
33-10-05 09	483TCG11J25-5A
33-10-05 11	483TCG11J25-5A
B79-DAD	

IDENT CH-SECT-UNIT-FIG	PART NUMBER
B79-DAD	
24-50-05 08	SPARE
24-50-05 11	SPARE
24-50-05 14	SPARE
24-50-05 15	SPARE
B8-CAPT	
27-30-10 07	1841-1-5620
27-30-10 08	1841-1-5620
B8-DAD	
24-53-10 06	483TCG11J25-1A
24-53-10 08	483TCG11J25-1A
30-80-10 02	483TCG11J25-1A
30-80-10 03	483TCG11J25-1A
B8-FO	
27-30-10 07	1841-1-5620
27-30-10 08	1841-1-5620
B80-DAD	
24-50-05 08	SPARE
24-50-05 11	SPARE
24-50-05 14	SPARE
24-50-05 15	SPARE
B81-DAD	
24-50-05 08	483TCG11J25-3A
24-50-05 11	483TCG11J25-3A
24-50-05 14	483TCG11J25-3A
24-50-05 15	483TCG11J25-3A
24-21-17 03	483TCG11J5-3A
24-21-17 04	483TCG11J5-3A
B82-DAD	
24-50-05 08	483TCG11J25-3A
24-50-05 11	483TCG11J25-3A
24-50-05 14	483TCG11J25-3A
24-50-05 15	483TCG11J25-3A
24-21-17 03	483TCG11J5-3A
24-21-17 04	483TCG11J5-3A
B83-DAD	
24-50-05 08	483TCG11J25-3A
24-50-05 11	483TCG11J25-3A
24-50-05 14	483TCG11J25-3A
24-50-05 15	483TCG11J25-3A
24-21-17 03	483TCG11J5-3A
24-21-17 04	483TCG11J5-3A
B84-DAD	
24-50-05 08	SPARE
24-50-05 11	SPARE
24-50-05 14	SPARE
24-50-05 15	SPARE
B85-DAD	
24-50-01 05	483TCG11J25-3A
24-50-01 06	483TCG11J25-3A
24-50-01 07	483TCG11J25-3A

IDENT CH-SECT-UNIT-FIG	PART NUMBER
B85-DAD	
24-50-05 08	483TCG11J25-3A
24-50-05 11	483TCG11J25-3A
24-50-05 14	483TCG11J25-3A
24-50-05 15	483TCG11J25-3A
B86-DAD	
24-50-05 08	483TCG11J25-5A
24-50-05 11	483TCG11J25-5A
24-50-05 14	483TCG11J25-5A
24-50-05 15	483TCG11J25-5A
33-10-20 04	483TCG11J25-5A
33-10-20 07	483TCG11J25-5A
33-10-20 08	483TCG11J25-5A
B87-DAD	
24-50-05 08	483TCG11J25-5A
24-50-05 11	483TCG11J25-5A
24-50-05 14	483TCG11J25-5A
24-50-05 15	483TCG11J25-5A
33-10-20 04	483TCG11J25-5A
33-10-20 07	483TCG11J25-5A
33-10-20 08	483TCG11J25-5A
B88-DAD	
24-50-05 08	483TCG11J25-3A
24-50-05 11	483TCG11J25-3A
24-50-05 14	483TCG11J25-3A
24-50-05 15	483TCG11J25-3A
28-41-20 03	483TCG11J25-3A
B89-DAD	
24-50-05 08	483TCG11J25-3A
24-50-05 11	483TCG11J25-3A
24-50-05 14	483TCG11J25-3A
24-50-05 15	483TCG11J25-3A
28-42-10 02	483TCG11J25-3A
B90-DAD	
24-50-05 08	483TCG11J25-3A
24-50-05 11	483TCG11J25-3A
24-50-05 14	483TCG11J25-3A
24-50-05 15	483TCG11J25-3A
28-41-10 02	483TCG11J25-3A
28-41-10 03	483TCG11J25-3A
28-41-20 03	483TCG11J25-3A
B91-DAD	
24-50-05 08	483TCG11J25-3A
24-50-05 11	483TCG11J25-3A
24-50-05 14	483TCG11J25-3A
24-50-05 15	483TCG11J25-3A
32-60-10 04	483TCG11J25-3A
34-13-01 04	483TCG11J25-3A
34-13-01 08	483TCG11J25-3A
B92-DAD	
24-50-05 08	483TCG11J25-3A

IDENT CH-SECT-UNIT-FIG	PART NUMBER
B92-DAD	
24-50-05 11	483TCG11J25-3A
24-50-05 14	483TCG11J25-3A
24-50-05 15	483TCG11J25-3A
32-60-10 04	483TCG11J25-3A
B93-DAD	
24-50-05 08	483TCG11J25-3A
24-50-05 11	483TCG11J25-3A
24-50-05 14	483TCG11J25-3A
24-50-05 15	483TCG11J25-3A
32-60-20 02	483TCG11J25-3A
B94-DAD	
24-50-05 08	483TCG11J25-3A
24-50-05 11	483TCG11J25-3A
24-50-05 14	483TCG11J25-3A
24-50-05 15	483TCG11J25-3A
32-60-10 04	483TCG11J25-3A
B95-DAD	
24-50-05 08	SPARE
24-50-05 11	SPARE
24-50-05 14	SPARE
24-50-05 15	SPARE
B96-DAD	
24-50-05 08	483TCG11J25-3A
24-50-05 11	483TCG11J25-3A
24-50-05 14	483TCG11J25-3A
24-50-05 15	483TCG11J25-3A
34-13-01 04	483TCG11J25-3A
34-13-01 08	483TCG11J25-3A
B97-DAD	
24-50-05 08	483TCG11J25-3A
24-50-05 11	483TCG11J25-3A
24-50-05 14	483TCG11J25-3A
24-50-05 15	483TCG11J25-3A
31-20-60 02	483TCG11J25-3A
B98-DAD	
24-50-05 08	483TCG11J25-3A
24-50-05 11	483TCG11J25-3A
24-50-05 14	483TCG11J25-3A
24-50-05 15	483TCG11J25-3A
29-32-10 05	483TCG11J25-3A
B99-DAD	
24-50-05 08	483TCG11J25-3A
24-50-05 11	483TCG11J25-3A
24-50-05 14	483TCG11J25-3A
24-50-05 15	483TCG11J25-3A
52-70-10 02	483TCG11J25-3A
C	
33-10-20 04	140-4537
33-10-20 07	140-4537
33-10-20 08	140-4537

IDENT CH-SECT-UNIT-FIG	PART NUMBER
C	
33-10-05 05	140-4538
33-10-05 07	140-4538
33-10-05 08	140-4538
33-10-05 09	140-4538
C-AA	
33-10-20 07	D492-04-001
33-10-20 08	LT52A
C-AA	
33-10-20 04	4-013-01
C-AA-R	
33-10-20 08	BAEREF000004218
33-10-20 08	KPT06B14-5S
33-10-20 04	LS10215R12-12SN
33-10-20 07	LS10215R12-12SN
33-10-20 08	6026-14-5SNCON* DD
C-AB	
33-10-05 08	D492-04-001
33-10-05 11	KPT06B14-5S
33-10-05 05	LS10215R12-12SN
33-10-05 07	LS10215R12-12SN
33-10-05 08	LS10215R12-12SN
33-10-05 09	LT52A
33-10-05 11	LT52A
33-10-05 05	4-013-01
33-10-05 07	4-013-01
33-10-05 09	6026-14-5SNCON* DD
33-10-05 11	6026-14-5SNCON* DD
33-10-05 05	94002-12
33-10-05 07	94002-12
33-10-05 08	94002-12
C-AP	
33-40-15 02	BYW54
33-40-15 02	1N4005
33-40-15 02	25-7NF1815-5A
C-DAG	
30-40-15 07	652-1
30-40-15 12	652-2W
C-DAG	
30-40-15 10	652-2W
30-40-15 11	652-2W
C-DAG	
30-40-15 07	652-2W
C-DR	
30-30-20 02	WC1503
C-GA	
24-30-20 02	A703ZS
24-30-20 03	A703ZS

IDENT CH-SECT-UNIT-FIG	PART NUMBER
C-GA	
24-50-01 05	A703ZS
24-50-01 06	A703ZS
24-50-01 07	A703ZS
49-60-30 06	A703ZS
49-60-30 08	A703ZS
49-60-30 09	A703ZS
49-60-30 11	A703ZS
49-60-10 05	703ZS
C-GG	
30-20-10 02	BYW54
26-10-30 03	HWBUN1146D10B
30-20-10 02	HWBUN1146D10B
32-60-10 04	HWBUN1146D10B
49-60-30 11	HWBUN1146D10B
79-30-10 02	HWBUN1146D10B
80-10-10 04	HWBUN1146D10B
C-PQ	
32-60-10 04	HWBUN1146S3B
C-S-DAE	
33-10-05 05	BDX67A
33-10-05 07	BDX67A
33-10-05 08	BDX67A
33-10-05 09	BDX67A
33-10-05 11	BDX67A
33-10-05 05	25-8NF405-503A
33-10-05 07	25-8NF405-503A
33-10-05 08	25-8NF405-503A
33-10-05 11	25-8NF405-503A
C-T-DAE	
33-10-20 04	BDX67A
33-10-20 07	BDX67A
33-10-20 08	BDX67A
33-10-20 04	25-8NF407-503A
33-10-20 07	25-8NF407-503A
C-U-DAE	
33-10-20 04	BDX67A
33-10-20 07	BDX67A
33-10-20 08	BDX67A
33-10-20 04	25-8NF409-503A
33-10-20 07	25-8NF409-503A
C-UC	
31-50-05 03	30-231-15
C-V-DAE	
33-10-05 05	BDX67A
33-10-05 07	BDX67A
33-10-05 08	BDX67A
33-10-05 09	BDX67A
33-10-05 11	BDX67A
33-10-05 05	25-8NF399-503A
33-10-05 07	25-8NF399-503A

IDENT CH-SECT-UNIT-FIG	PART NUMBER
C-V-DAE	
33-10-05 08	25-8NF399-503A
33-10-05 11	25-8NF399-503A
C-WX	
31-50-05 03	B375-01
31-50-05 03	99-930
C-X-DAE	
33-10-05 05	BDX67A
33-10-05 07	BDX67A
33-10-05 08	BDX67A
33-10-05 09	BDX67A
33-10-05 11	BDX67A
33-10-05 05	25-8NF401-503A
33-10-05 07	25-8NF401-503A
33-10-05 08	25-8NF401-503A
33-10-05 11	25-8NF401-503A
C-XZ	
24-30-20 02	51509-006C
24-30-20 03	51509-006C
C-XZ	
24-30-20 02	51539-006H
24-30-20 03	51539-006H
C-Y-DAE	
33-10-20 04	BDX67A
33-10-20 07	BDX67A
33-10-20 08	BDX67A
33-10-20 04	25-8NF397-503A
33-10-20 07	25-8NF397-503A
C-Z-DAE	
31-50-01 04	MJE2955
31-50-01 07	MJE2955
31-50-01 08	MJE2955
31-50-01 09	MJE2955
31-50-01 14	MJE2955
C-ZJ	
31-50-05 03	M12883-40-19
31-50-05 03	M400-1265
C-ZKA	
49-60-10 05	M12883-41-16
49-60-10 05	M300-1264
49-60-10 05	S0-1049-8309
C-ZL	
24-50-01 05	BAEREF000003234
24-50-01 06	BAEREF000003234
24-50-01 07	BAEREF000003234
24-50-01 05	SW06HHN400SUU9* 096
24-50-01 06	SW06HHN400SUU9* 096
24-50-01 07	SW06HHN400SUU9* 096

IDENT CH-SECT-UNIT-FIG	PART NUMBER
C-ZT	
21-60-10 11	ERS015DJ000
CA-CG	
33-40-10 05	1TP1-3
33-40-10 06	1TP1-3M
CA-CG	
33-40-10 05	1TP1-3M
CA-DAB	
30-40-20 03	M12883-48-02
30-40-20 05	M12883-48-02
30-40-20 03	M500-1383
30-40-20 05	M500-1383
CA-ZK	
73-20-10 03	M12883-41-16
73-20-10 03	M300-1264
CA1-P	
33-10-10 31	BAEREF000004326
33-10-20 04	BAEREF000004326
33-10-20 07	BAEREF000004326
33-10-20 08	BAEREF000004326
33-10-20 04	GTR71-16NACS1
33-10-20 07	GTR71-16NACS1
33-10-20 08	GTR71-16NACS1
33-10-10 31	6027-16-26SNC0* NDB
33-10-20 04	6027-16-26SNC0* NDB
33-10-20 07	6027-16-26SNC0* NDB
33-10-20 08	6027-16-26SNC0* NDB
CA1-R	
33-10-10 31	BAEREF000003120
33-10-20 04	BAEREF000003120
33-10-20 07	BAEREF000003120
33-10-20 08	BAEREF000003120
33-10-20 04	GTR62-16NACS1
33-10-20 07	GTR62-16NACS1
33-10-20 08	GTR62-16NACS1
33-10-10 31	6026-16-26PNC0* NDB
33-10-20 04	6026-16-26PNC0* NDB
33-10-20 07	6026-16-26PNC0* NDB
33-10-20 08	6026-16-26PNC0* NDB
CA2-P	
33-10-10 31	BAEREF000003708
33-10-10 31	6027-24-61SNC0* NDD

IDENT CH-SECT-UNIT-FIG	PART NUMBER
CA2-R	
33-10-10 31	BAEREF000003118
33-10-10 31	6026-24-61PNC0* NDD
CA3-P	
27-33-00 05	BAEREF000003457
27-33-00 07	BAEREF000003457
27-33-00 05	6027-16-26PNC0* NDC
27-33-00 07	6027-16-26PNC0* NDC
CA3-R	
27-33-00 05	BAEREF000003427
27-33-00 07	BAEREF000003427
27-33-00 05	6026-16-26SNC0* NDD
27-33-00 07	6026-16-26SNC0* NDD
CB-BA	
33-10-05 08	25-8NF3669
33-10-05 09	25-8NF3669
33-10-05 11	25-8NF3669
CB-CG	
33-40-10 05	1TP1-3
33-40-10 06	1TP1-3M
CB-CG	
33-40-10 05	1TP1-3M
CB-DB	
28-41-20 03	99-212
CB-ZK	
73-20-10 03	M12883-41-16
73-20-10 03	M300-1264
CB1-ZKA	
24-50-05 08	SPARE
49-60-30 06	483TCG11J5-3A
49-60-30 08	483TCG11J5-3A
49-60-30 09	483TCG11J5-3A
49-60-30 11	483TCG11J5-3A
CB2-ZKA	
24-50-05 08	SPARE
CB2-ZKA	
49-60-30 06	25-8NF2217-15
49-60-30 08	25-8NF2217-15
49-60-30 09	25-8NF2217-15
49-60-30 11	25-8NF2217-15
49-60-30 06	483-96TCK14-15A
49-60-30 08	483-96TCK14-15A
49-60-30 09	483-96TCK14-15A
49-60-30 11	483-96TCK14-15A
CC-DAB	
30-40-20 03	M12883-48-02

IDENT CH-SECT-UNIT-FIG	PART NUMBER
CC-DAB	
30-40-20 05	M12883-48-02
30-40-20 03	M500-1383
30-40-20 05	M500-1383
CC-DB	
28-41-20 03	99-212
CC-ZK	
80-10-10 04	M12883-40-19
80-10-10 04	M400-1265
CC1-P	
31-50-01 04	BAEREF000003123
31-50-01 07	BAEREF000003123
31-50-01 08	BAEREF000003123
31-50-01 09	BAEREF000003123
31-50-01 14	BAEREF000003123
33-10-05 05	BAEREF000003123
33-10-05 07	BAEREF000003123
33-10-05 08	BAEREF000003123
33-10-05 09	BAEREF000003123
33-10-05 11	BAEREF000003123
33-10-20 04	BAEREF000004350
33-10-20 07	BAEREF000004350
33-10-20 08	BAEREF000004350
33-10-05 05	GTR62-20NACS1
33-10-05 07	GTR62-20NACS1
33-10-05 08	GTR62-20NACS1
33-10-05 09	GTR62-20NACS1
33-10-05 11	GTR62-20NACS1
33-10-20 04	GTR62-20NACS1
33-10-20 07	GTR62-20NACS1
33-10-20 08	GTR62-20NACS1
33-10-20 04	6027-20-41SNC0* NDA
33-10-20 07	6027-20-41SNC0* NDA
33-10-20 08	6027-20-41SNC0* NDA
31-50-01 04	6027-20-41SNC0* NDB
31-50-01 07	6027-20-41SNC0* NDB
31-50-01 08	6027-20-41SNC0* NDB
31-50-01 09	6027-20-41SNC0* NDB
31-50-01 14	6027-20-41SNC0* NDB
33-10-05 05	6027-20-41SNC0* NDB
33-10-05 07	6027-20-41SNC0* NDB

IDENT CH-SECT-UNIT-FIG	PART NUMBER
CC1-P	
33-10-05 08	6027-20-41SNC0* NDB
33-10-05 09	6027-20-41SNC0* NDB
33-10-05 11	6027-20-41SNC0* NDB
CC1-P	
21-20-10 03	GTR62-20NACS1
29-32-10 05	GTR62-20NACS1
31-20-60 02	GTR62-20NACS1
21-20-10 03	602GB129-20-1
29-32-10 05	602GB129-20-1
31-20-60 02	602GB129-20-1
21-20-10 03	6026-20-41PN
29-32-10 05	6026-20-41PN
31-20-60 02	6026-20-41PN
21-20-10 03	6026-20-41PNC0* NDB
29-32-10 05	6026-20-41PNC0* NDB
21-20-10 03	6026-20-41PNC0* ND1
29-32-10 05	6026-20-41PNC0* ND1
31-20-60 02	6026-20-41PNC0* ND1
21-20-10 03	6026-20-41PN08
29-32-10 05	6026-20-41PN08
CC1-R	
33-10-20 04	GTR62-20NACS1
33-10-20 07	GTR62-20NACS1
33-10-20 08	GTR62-20NACS1
33-10-05 05	6026-20-41P
33-10-05 07	6026-20-41P
33-10-05 08	6026-20-41P
33-10-05 09	6026-20-41P
33-10-05 11	6026-20-41P
31-50-01 04	6026-20-41PN
31-50-01 07	6026-20-41PN
31-50-01 08	6026-20-41PN
31-50-01 09	6026-20-41PN
31-50-01 14	6026-20-41PN
33-10-20 04	6026-20-41PN
33-10-20 07	6026-20-41PN
33-10-20 08	6026-20-41PN
CC1-R	
21-20-10 03	BAEREF000003123
29-32-10 05	BAEREF000003123
31-20-60 02	BAEREF000003123
29-32-10 05	GTR62-20NACS1

IDENT CH-SECT-UNIT-FIG	PART NUMBER
CC1-R	
31-20-60 02	GTR62-20NACS1
21-20-10 03	6027-20-41SNC0* NDB
29-32-10 05	6027-20-41SNC0* NDB
31-20-60 02	6027-20-41SNC0* NDB
CC2-P	
27-61-10 03	BAEREF000003124
73-20-02 05	BAEREF000003124
33-10-20 04	BAEREF000004392
33-10-20 07	BAEREF000004392
33-10-20 08	BAEREF000004392
33-10-20 04	GTR62-20NACS1
33-10-20 07	GTR62-20NACS1
33-10-20 08	GTR62-20NACS1
73-20-02 05	602GB129-20-1
33-10-20 04	6027-20-41SWC0* NDA
33-10-20 07	6027-20-41SWC0* NDA
33-10-20 08	6027-20-41SWC0* NDA
27-61-10 03	6027-20-41SWC0* NDB
73-20-02 05	6027-20-41SWC0* NDB
CC2-P	
32-60-10 04	BAEREF000004290
32-60-10 04	GTR62-20NACS1
27-61-10 04	602GB129-20-1
27-61-10 08	602GB129-20-1
27-61-10 04	6026-20-41PW
27-61-10 08	6026-20-41PW
32-60-10 04	6026-20-41PWC0* NDB
CC2-P	
28-41-10 02	BAEREF000003522
28-41-10 03	BAEREF000003522
28-41-10 02	6026-20-41PWC0* NDD
28-41-10 03	6026-20-41PWC0* NDD
CC2-R	
33-10-20 04	GTR62-20NACS1
33-10-20 07	GTR62-20NACS1
33-10-20 08	GTR62-20NACS1
27-61-10 03	RELIEF:602GB12* 9-20-1
33-10-20 04	25-8NF593

IDENT CH-SECT-UNIT-FIG	PART NUMBER
CC2-R	
33-10-20 07	25-8NF593
33-10-20 08	25-8NF593
73-20-02 05	602GB129-20-1
27-61-10 03	6026-20-41PW
33-10-20 04	6026-20-41PW
33-10-20 07	6026-20-41PW
33-10-20 08	6026-20-41PW
73-20-02 05	6026-20-41PW
CC2-R	
27-61-10 04	BAEREF000003124
27-61-10 08	BAEREF000003124
28-41-10 02	BAEREF000004392
28-41-10 03	BAEREF000004392
32-60-10 04	BAEREF000004392
32-60-10 04	GTR62-20NACS1
28-41-10 02	6027-20-41SWC0* NDA
28-41-10 03	6027-20-41SWC0* NDA
32-60-10 04	6027-20-41SWC0* NDA
27-61-10 04	6027-20-41SWC0* NDB
27-61-10 08	6027-20-41SWC0* NDB
CC2-R	
28-41-10 02	BAEREF000003124
28-41-10 03	BAEREF000003124
28-41-10 02	6027-20-41SWC0* NDB
28-41-10 03	6027-20-41SWC0* NDB
CC3-P	
30-20-10 02	BAEREF000003123
31-50-01 04	BAEREF000003123
31-50-01 07	BAEREF000003123
31-50-01 08	BAEREF000003123
31-50-01 09	BAEREF000003123
31-50-01 14	BAEREF000003123
30-20-10 02	602GB129-20-1
30-20-10 02	6027-20-41SNC0* NDB
31-50-01 04	6027-20-41SNC0* NDB
31-50-01 07	6027-20-41SNC0* NDB
31-50-01 08	6027-20-41SNC0* NDB
31-50-01 09	6027-20-41SNC0* NDB

IDENT CH-SECT-UNIT-FIG	PART NUMBER
CC3-P	
31-50-01 14	6027-20-41SNC0* NDB
CC3-R	
30-20-10 02	6026-20-41P
31-50-01 04	6026-20-41PN
31-50-01 07	6026-20-41PN
31-50-01 08	6026-20-41PN
31-50-01 09	6026-20-41PN
31-50-01 14	6026-20-41PN
31-50-01 04	6026-20-41PNC0* NDB
31-50-01 07	6026-20-41PNC0* NDB
31-50-01 08	6026-20-41PNC0* NDB
31-50-01 09	6026-20-41PNC0* NDB
31-50-01 14	6026-20-41PNC0* NDB
31-50-01 04	6026-20-41PNC8
31-50-01 07	6026-20-41PNC8
31-50-01 08	6026-20-41PNC8
31-50-01 09	6026-20-41PNC8
31-50-01 14	6026-20-41PNC8
CC4-P	
33-10-10 31	BAEREF000003145
33-10-10 31	6027-14-19SNC0* NDB
CC4-R	
33-10-10 31	BAEREF000003143
33-10-10 31	6026-14-19PNC0* NDB
CD-CG	
33-40-10 05	1TP1-3
33-40-10 06	1TP1-3M
CD-CG	
33-40-10 05	1TP1-3M
CD-DB	
28-41-20 03	99-212
CD-LH	
77-40-10 02	3071437-2
CD-LH	
77-40-10 02	3071437-3
CD-LH	
77-40-10 02	3071437-4
CD-RH	
77-40-10 02	3071437-2
CD-RH	
77-40-10 02	3071437-3
CD-RH	

IDENT CH-SECT-UNIT-FIG	PART NUMBER
CD-RH	
77-40-10 02	3071437-4
CD-ZK	
24-21-17 03	M12883-40-19
24-21-17 04	M12883-40-19
32-60-10 04	M12883-40-19
80-10-10 04	M12883-40-19
24-21-17 03	M400-1265
24-21-17 04	M400-1265
32-60-10 04	M400-1265
80-10-10 04	M400-1265
CD1-P	
21-31-10 07	BAEREF000003145
31-50-01 04	BAEREF000003145
31-50-01 07	BAEREF000003145
31-50-01 08	BAEREF000003145
31-50-01 09	BAEREF000003145
31-50-01 14	BAEREF000003145
33-10-10 31	BAEREF000003145
33-10-20 04	BAEREF000004349
33-10-20 07	BAEREF000004349
33-10-20 08	BAEREF000004349
33-10-20 04	GTR71-16NACS1
33-10-20 07	GTR71-16NACS1
33-10-20 08	GTR71-16NACS1
33-10-20 04	6027-14-19SNCO* NDA
33-10-20 07	6027-14-19SNCO* NDA
33-10-20 08	6027-14-19SNCO* NDA
21-31-10 07	6027-14-19SNCO* NDB
31-50-01 04	6027-14-19SNCO* NDB
31-50-01 07	6027-14-19SNCO* NDB
31-50-01 08	6027-14-19SNCO* NDB
31-50-01 09	6027-14-19SNCO* NDB
31-50-01 14	6027-14-19SNCO* NDB
33-10-10 31	6027-14-19SNCO* NDB
CD1-R	
21-31-10 07	BAEREF000003143
31-50-01 04	BAEREF000003143
31-50-01 07	BAEREF000003143
31-50-01 08	BAEREF000003143
31-50-01 09	BAEREF000003143

IDENT CH-SECT-UNIT-FIG	PART NUMBER
CD1-R	
31-50-01 14	BAEREF000003143
33-10-10 31	BAEREF000003143
33-10-20 04	BAEREF000003282
33-10-20 07	BAEREF000003282
33-10-20 08	BAEREF000003282
33-10-20 04	GTR62-14NACS1
33-10-20 07	GTR62-14NACS1
33-10-20 08	GTR62-14NACS1
21-31-10 07	6026-14-19PNCO* NDB
31-50-01 04	6026-14-19PNCO* NDB
31-50-01 07	6026-14-19PNCO* NDB
31-50-01 08	6026-14-19PNCO* NDB
31-50-01 09	6026-14-19PNCO* NDB
31-50-01 14	6026-14-19PNCO* NDB
33-10-10 31	6026-14-19PNCO* NDB
33-10-20 04	6026-14-19PNCO* NDB
33-10-20 07	6026-14-19PNCO* NDB
33-10-20 08	6026-14-19PNCO* NDB
CD2-P	
33-10-10 31	125REF000000060
33-10-10 31	6020-22-55PNCO* NDD
CD2-R	
33-10-10 31	BAEREF000003897
33-10-10 31	6026-22-55SNCO* NDD
CD3-P	
27-33-00 05	BAEREF000003457
27-33-00 07	BAEREF000003457
27-33-00 05	6027-16-26PNCO* NDC
27-33-00 07	6027-16-26PNCO* NDC
CD3-R	
27-33-00 05	BAEREF000003427
27-33-00 07	BAEREF000003427
27-33-00 05	6026-16-26SNCO* NDD
27-33-00 07	6026-16-26SNCO* NDD

IDENT CH-SECT-UNIT-FIG	PART NUMBER
CE	
33-10-05 05	25-8NF2921-1A
33-10-05 07	25-8NF2921-1A
33-10-05 08	25-8NF2921-1A
33-10-05 09	25-8NF2921-1A
33-10-05 11	25-8NF2921-1A
CE-CG	
33-40-30 03	1TP1-3
33-30-15 07	2TP8-1
CE-CG	
33-40-30 03	1TP1-3M
CE-DAB	
30-40-20 03	M12883-48-02
30-40-20 05	M12883-48-02
30-40-20 03	M500-1383
30-40-20 05	M500-1383
CE-DB	
28-41-10 02	99-212
28-41-10 03	99-212
CF	
33-10-05 05	WBUN1736D10B
33-10-05 07	WBUN1736D10B
33-10-05 08	WBUN1736D10B
33-10-05 09	WBUN1736D10B
33-10-05 11	WBUN1736D10B
CG-DAB	
30-40-20 03	M12883-48-02
30-40-20 05	M12883-48-02
30-40-20 03	M500-1383
30-40-20 05	M500-1383
CG-DB	
28-41-30 02	99-212
CGE-P	
33-30-15 07	MTC100KT1-1103
33-40-30 03	MTC100KT1-1103
33-30-15 07	MTC100KT1-1104
33-40-30 03	MTC100KT1-1104
33-30-15 07	MTC100YH1-003
33-40-30 03	MTC100YH1-003
CGE-P	
33-40-30 03	MTC100YC1-006
33-40-30 03	MTC100YH1-003
CGE-R	
33-40-30 03	MTC100KTI-1102
33-30-15 07	MTC100KT1-1101
33-40-30 03	MTC100KT1-1101
33-30-15 07	MTC100KT1-1102
33-30-15 07	MTC100YH1-004
33-40-30 03	MTC100YH1-004
CGE-R	
33-40-30 03	MTC100YC1-005

IDENT CH-SECT-UNIT-FIG	PART NUMBER
CGE-R	
33-40-30 03	MTC100YH1-004
CGF-P	
33-40-10 05	MTC100KT1-1103
33-40-10 05	MTC100KT1-1104
33-40-10 06	MTC100YC1-006
33-40-10 05	MTC100YH1-003
33-40-10 06	MTC100YH1-003
CGF-P	
33-40-10 05	MTC100YC1-006
33-40-10 05	MTC100YH1-003
CGF-R	
33-40-10 05	MTC100KT1-1101
33-40-10 05	MTC100KT1-1102
33-40-10 06	MTC100YC1-005
33-40-10 05	MTC100YH1-004
33-40-10 06	MTC100YH1-004
CGF-R	
33-40-10 05	MTC100YC1-005
33-40-10 05	MTC100YH1-004
CGG-P	
33-40-10 06	MTCR101-04P
CGG-P	
33-40-10 05	MTCR101-04P
CGG-R	
33-40-10 06	MTCR161-04S
CGG-R	
33-40-10 05	MTCR161-04S
CG1-P	
21-60-10 08	MTC100KT2-1101
21-60-10 10	MTC100KT2-1101
21-60-10 11	MTC100KT2-1101
24-30-10 02	MTC100KT2-1101
24-50-01 05	MTC100KT2-1101
24-50-01 06	MTC100KT2-1101
24-50-01 07	MTC100KT2-1101
26-10-10 03	MTC100KT2-1101
26-20-10 03	MTC100KT2-1101
30-20-10 02	MTC100KT2-1101
73-20-01 05	MTC100KT2-1101
73-20-10 03	MTC100KT2-1101
80-10-10 04	MTC100KT2-1101
21-60-10 08	MTC100KT2-1102
21-60-10 10	MTC100KT2-1102
21-60-10 11	MTC100KT2-1102
24-30-10 02	MTC100KT2-1102
24-50-01 05	MTC100KT2-1102
24-50-01 06	MTC100KT2-1102
24-50-01 07	MTC100KT2-1102
26-10-10 03	MTC100KT2-1102
26-20-10 03	MTC100KT2-1102

IDENT CH-SECT-UNIT-FIG	PART NUMBER
CG1-P	
30-20-10 02	MTC100KT2-1102
73-20-01 05	MTC100KT2-1102
73-20-10 03	MTC100KT2-1102
80-10-10 04	MTC100KT2-1102
21-60-10 08	MTC100YH2-009
21-60-10 10	MTC100YH2-009
21-60-10 11	MTC100YH2-009
24-30-10 02	MTC100YH2-009
24-50-01 05	MTC100YH2-009
24-50-01 06	MTC100YH2-009
24-50-01 07	MTC100YH2-009
26-10-10 03	MTC100YH2-009
26-20-10 03	MTC100YH2-009
30-20-10 02	MTC100YH2-009
73-20-01 05	MTC100YH2-009
73-20-10 03	MTC100YH2-009
80-10-10 04	MTC100YH2-009
CG1-P	
21-60-10 11	MTC100YC1-001
24-30-10 02	MTC100YC1-001
24-50-01 06	MTC100YC1-001
24-50-01 07	MTC100YC1-001
26-10-10 03	MTC100YC1-001
26-20-10 03	MTC100YC1-001
30-20-10 02	MTC100YC1-001
73-20-01 05	MTC100YC1-001
73-20-10 03	MTC100YC1-001
80-10-10 04	MTC100YC1-001
21-60-10 11	MTC100YC1-002
24-30-10 02	MTC100YC1-002
24-50-01 06	MTC100YC1-002
24-50-01 07	MTC100YC1-002
26-10-10 03	MTC100YC1-002
26-20-10 03	MTC100YC1-002
30-20-10 02	MTC100YC1-002
73-20-01 05	MTC100YC1-002
73-20-10 03	MTC100YC1-002
80-10-10 04	MTC100YC1-002
21-60-10 11	MTC100YH2-009
24-30-10 02	MTC100YH2-009
24-50-01 06	MTC100YH2-009
24-50-01 07	MTC100YH2-009
26-10-10 03	MTC100YH2-009
26-20-10 03	MTC100YH2-009
30-20-10 02	MTC100YH2-009
73-20-01 05	MTC100YH2-009
73-20-10 03	MTC100YH2-009
80-10-10 04	MTC100YH2-009
CG1-R	
21-60-10 08	MTC100KT2-1103

IDENT CH-SECT-UNIT-FIG	PART NUMBER
CG1-R	
21-60-10 10	MTC100KT2-1103
21-60-10 11	MTC100KT2-1103
24-30-10 02	MTC100KT2-1103
24-50-01 05	MTC100KT2-1103
24-50-01 06	MTC100KT2-1103
24-50-01 07	MTC100KT2-1103
26-10-10 03	MTC100KT2-1103
26-20-10 03	MTC100KT2-1103
30-20-10 02	MTC100KT2-1103
73-20-01 05	MTC100KT2-1103
73-20-10 03	MTC100KT2-1103
80-10-10 04	MTC100KT2-1103
21-60-10 08	MTC100KT2-1104
21-60-10 10	MTC100KT2-1104
21-60-10 11	MTC100KT2-1104
24-30-10 02	MTC100KT2-1104
24-50-01 05	MTC100KT2-1104
24-50-01 06	MTC100KT2-1104
24-50-01 07	MTC100KT2-1104
26-10-10 03	MTC100KT2-1104
26-20-10 03	MTC100KT2-1104
30-20-10 02	MTC100KT2-1104
73-20-01 05	MTC100KT2-1104
73-20-10 03	MTC100KT2-1104
80-10-10 04	MTC100KT2-1104
21-60-10 08	MTC100YH2-010
21-60-10 10	MTC100YH2-010
21-60-10 11	MTC100YH2-010
24-30-10 02	MTC100YH2-010
24-50-01 05	MTC100YH2-010
24-50-01 06	MTC100YH2-010
24-50-01 07	MTC100YH2-010
26-10-10 03	MTC100YH2-010
26-20-10 03	MTC100YH2-010
30-20-10 02	MTC100YH2-010
73-20-01 05	MTC100YH2-010
73-20-10 03	MTC100YH2-010
80-10-10 04	MTC100YH2-010
CG1-R	
21-60-10 11	MTC100YC1-003
24-30-10 02	MTC100YC1-003
24-50-01 06	MTC100YC1-003
24-50-01 07	MTC100YC1-003
26-10-10 03	MTC100YC1-003
26-20-10 03	MTC100YC1-003
30-20-10 02	MTC100YC1-003
73-20-01 05	MTC100YC1-003
73-20-10 03	MTC100YC1-003
80-10-10 04	MTC100YC1-003
21-60-10 11	MTC100YC1-004

IDENT CH-SECT-UNIT-FIG	PART NUMBER
CG1-R	
24-30-10 02	MTC100YC1-004
24-50-01 06	MTC100YC1-004
24-50-01 07	MTC100YC1-004
26-10-10 03	MTC100YC1-004
26-20-10 03	MTC100YC1-004
30-20-10 02	MTC100YC1-004
73-20-01 05	MTC100YC1-004
73-20-10 03	MTC100YC1-004
80-10-10 04	MTC100YC1-004
21-60-10 11	MTC100YH2-010
24-30-10 02	MTC100YH2-010
24-50-01 06	MTC100YH2-010
24-50-01 07	MTC100YH2-010
26-10-10 03	MTC100YH2-010
26-20-10 03	MTC100YH2-010
30-20-10 02	MTC100YH2-010
73-20-01 05	MTC100YH2-010
73-20-10 03	MTC100YH2-010
80-10-10 04	MTC100YH2-010
CG10-P	
33-40-10 06	MTCR161-04P
CG10-P	
33-10-05 05	MTCR161-04P
33-10-05 07	MTCR161-04P
33-10-05 08	MTCR161-04P
33-10-05 09	MTCR161-04P
33-10-05 11	MTCR161-04P
33-40-10 05	MTCR161-04P
CG10-R	
33-40-10 06	MTCR101-04S
CG10-R	
33-10-05 05	MTCR101-04S
33-10-05 07	MTCR101-04S
33-10-05 08	MTCR101-04S
33-10-05 09	MTCR101-04S
33-10-05 11	MTCR101-04S
33-40-10 05	MTCR101-04S
CG11-P	
21-20-10 03	MTCR161-04P
30-30-31 02	MTCR161-04P
80-10-10 04	MTCR161-04P
CG11-R	
21-20-10 03	MTCR101-04S
30-30-31 02	MTCR101-04S
80-10-10 04	MTCR101-04S
CG2-P	
21-60-10 08	MTC100KT2-1101
21-60-10 10	MTC100KT2-1101
21-60-10 11	MTC100KT2-1101
24-50-01 05	MTC100KT2-1101

IDENT CH-SECT-UNIT-FIG	PART NUMBER
CG2-P	
24-50-01 06	MTC100KT2-1101
24-50-01 07	MTC100KT2-1101
26-10-10 03	MTC100KT2-1101
26-20-10 03	MTC100KT2-1101
27-24-10 02	MTC100KT2-1101
27-24-10 03	MTC100KT2-1101
30-20-10 02	MTC100KT2-1101
33-40-10 05	MTC100KT2-1101
49-60-30 06	MTC100KT2-1101
49-60-30 08	MTC100KT2-1101
49-60-30 09	MTC100KT2-1101
49-60-30 11	MTC100KT2-1101
80-10-10 04	MTC100KT2-1101
21-60-10 08	MTC100KT2-1102
21-60-10 10	MTC100KT2-1102
21-60-10 11	MTC100KT2-1102
24-50-01 05	MTC100KT2-1102
24-50-01 06	MTC100KT2-1102
24-50-01 07	MTC100KT2-1102
26-10-10 03	MTC100KT2-1102
26-20-10 03	MTC100KT2-1102
27-24-10 02	MTC100KT2-1102
27-24-10 03	MTC100KT2-1102
30-20-10 02	MTC100KT2-1102
33-40-10 05	MTC100KT2-1102
49-60-30 06	MTC100KT2-1102
49-60-30 08	MTC100KT2-1102
49-60-30 09	MTC100KT2-1102
49-60-30 11	MTC100KT2-1102
80-10-10 04	MTC100KT2-1102
33-40-10 06	MTC100YC1-001
33-40-10 06	MTC100YC1-002
21-60-10 08	MTC100YH2-009
21-60-10 10	MTC100YH2-009
21-60-10 11	MTC100YH2-009
24-50-01 05	MTC100YH2-009
24-50-01 06	MTC100YH2-009
24-50-01 07	MTC100YH2-009
26-10-10 03	MTC100YH2-009
26-20-10 03	MTC100YH2-009
27-24-10 02	MTC100YH2-009
27-24-10 03	MTC100YH2-009
30-20-10 02	MTC100YH2-009
33-40-10 05	MTC100YH2-009
33-40-10 06	MTC100YH2-009
49-60-30 06	MTC100YH2-009
49-60-30 08	MTC100YH2-009
49-60-30 09	MTC100YH2-009
49-60-30 11	MTC100YH2-009
80-10-10 04	MTC100YH2-009

IDENT CH-SECT-UNIT-FIG	PART NUMBER
CG2-P	
21-60-10 11	MTC100YC1-001
24-50-01 06	MTC100YC1-001
24-50-01 07	MTC100YC1-001
26-10-10 03	MTC100YC1-001
26-20-10 03	MTC100YC1-001
27-24-10 03	MTC100YC1-001
30-20-10 02	MTC100YC1-001
33-40-10 05	MTC100YC1-001
49-60-30 08	MTC100YC1-001
80-10-10 04	MTC100YC1-001
21-60-10 11	MTC100YC1-002
24-50-01 06	MTC100YC1-002
24-50-01 07	MTC100YC1-002
26-10-10 03	MTC100YC1-002
26-20-10 03	MTC100YC1-002
27-24-10 03	MTC100YC1-002
30-20-10 02	MTC100YC1-002
33-40-10 05	MTC100YC1-002
49-60-30 08	MTC100YC1-002
80-10-10 04	MTC100YC1-002
21-60-10 11	MTC100YH2-009
24-50-01 06	MTC100YH2-009
24-50-01 07	MTC100YH2-009
26-10-10 03	MTC100YH2-009
26-20-10 03	MTC100YH2-009
27-24-10 03	MTC100YH2-009
30-20-10 02	MTC100YH2-009
33-40-10 05	MTC100YH2-009
49-60-30 08	MTC100YH2-009
80-10-10 04	MTC100YH2-009
CG2-R	
21-60-10 08	MTC100KT2-1103
21-60-10 10	MTC100KT2-1103
21-60-10 11	MTC100KT2-1103
24-50-01 05	MTC100KT2-1103
24-50-01 06	MTC100KT2-1103
24-50-01 07	MTC100KT2-1103
26-10-10 03	MTC100KT2-1103
26-20-10 03	MTC100KT2-1103
27-24-10 02	MTC100KT2-1103
27-24-10 03	MTC100KT2-1103
30-20-10 02	MTC100KT2-1103
33-40-10 05	MTC100KT2-1103
49-60-30 06	MTC100KT2-1103
49-60-30 08	MTC100KT2-1103
49-60-30 09	MTC100KT2-1103
49-60-30 11	MTC100KT2-1103
80-10-10 04	MTC100KT2-1103
21-60-10 08	MTC100KT2-1104
21-60-10 10	MTC100KT2-1104

IDENT CH-SECT-UNIT-FIG	PART NUMBER
CG2-R	
21-60-10 11	MTC100KT2-1104
24-50-01 05	MTC100KT2-1104
24-50-01 06	MTC100KT2-1104
24-50-01 07	MTC100KT2-1104
26-10-10 03	MTC100KT2-1104
26-20-10 03	MTC100KT2-1104
27-24-10 02	MTC100KT2-1104
27-24-10 03	MTC100KT2-1104
30-20-10 02	MTC100KT2-1104
33-40-10 05	MTC100KT2-1104
49-60-30 06	MTC100KT2-1104
49-60-30 08	MTC100KT2-1104
49-60-30 09	MTC100KT2-1104
49-60-30 11	MTC100KT2-1104
80-10-10 04	MTC100KT2-1104
33-40-10 06	MTC100YC1-003
33-40-10 06	MTC100YC1-004
21-60-10 08	MTC100YH2-010
21-60-10 10	MTC100YH2-010
21-60-10 11	MTC100YH2-010
24-50-01 05	MTC100YH2-010
24-50-01 06	MTC100YH2-010
24-50-01 07	MTC100YH2-010
26-10-10 03	MTC100YH2-010
26-20-10 03	MTC100YH2-010
27-24-10 02	MTC100YH2-010
27-24-10 03	MTC100YH2-010
30-20-10 02	MTC100YH2-010
33-40-10 05	MTC100YH2-010
33-40-10 06	MTC100YH2-010
49-60-30 06	MTC100YH2-010
49-60-30 08	MTC100YH2-010
49-60-30 09	MTC100YH2-010
49-60-30 11	MTC100YH2-010
80-10-10 04	MTC100YH2-010
CG2-R	
21-60-10 11	MTC100YC1-003
24-50-01 06	MTC100YC1-003
24-50-01 07	MTC100YC1-003
26-10-10 03	MTC100YC1-003
26-20-10 03	MTC100YC1-003
27-24-10 03	MTC100YC1-003
30-20-10 02	MTC100YC1-003
33-40-10 05	MTC100YC1-003
49-60-30 08	MTC100YC1-003
80-10-10 04	MTC100YC1-003
21-60-10 11	MTC100YC1-004
24-50-01 06	MTC100YC1-004
24-50-01 07	MTC100YC1-004
26-10-10 03	MTC100YC1-004

IDENT CH-SECT-UNIT-FIG	PART NUMBER
CG2-R	
26-20-10 03	MTC100YC1-004
27-24-10 03	MTC100YC1-004
30-20-10 02	MTC100YC1-004
33-40-10 05	MTC100YC1-004
49-60-30 08	MTC100YC1-004
80-10-10 04	MTC100YC1-004
21-60-10 11	MTC100YH2-010
24-50-01 06	MTC100YH2-010
24-50-01 07	MTC100YH2-010
26-10-10 03	MTC100YH2-010
26-20-10 03	MTC100YH2-010
27-24-10 03	MTC100YH2-010
30-20-10 02	MTC100YH2-010
33-40-10 05	MTC100YH2-010
49-60-30 08	MTC100YH2-010
80-10-10 04	MTC100YH2-010
CG3-P	
21-30-10 02	MTCX1X100-100
21-60-20 02	MTCX1X100-100
21-60-20 03	MTCX1X100-100
24-21-17 03	MTCX1X100-100
24-21-17 04	MTCX1X100-100
27-24-10 02	MTCX1X100-100
27-24-10 03	MTCX1X100-100
21-30-10 02	MTC100KT1-1101
21-60-20 02	MTC100KT1-1101
21-60-20 03	MTC100KT1-1101
24-21-17 03	MTC100KT1-1101
24-21-17 04	MTC100KT1-1101
27-24-10 02	MTC100KT1-1101
27-24-10 03	MTC100KT1-1101
21-30-10 02	MTC100YH1-003
21-60-20 02	MTC100YH1-003
21-60-20 03	MTC100YH1-003
24-21-17 03	MTC100YH1-003
24-21-17 04	MTC100YH1-003
27-24-10 02	MTC100YH1-003
27-24-10 03	MTC100YH1-003
CG3-P	
21-60-20 03	MTC100YC1-005
24-21-17 04	MTC100YC1-005
27-24-10 03	MTC100YC1-005
21-60-20 03	MTC100YH1-003
24-21-17 04	MTC100YH1-003
27-24-10 03	MTC100YH1-003
CG3-R	
21-30-10 02	MTCX1X100-100
21-60-20 02	MTCX1X100-100
21-60-20 03	MTCX1X100-100
24-21-17 03	MTCX1X100-100

IDENT CH-SECT-UNIT-FIG	PART NUMBER
CG3-R	
24-21-17 04	MTCX1X100-100
27-24-10 02	MTCX1X100-100
27-24-10 03	MTCX1X100-100
21-30-10 02	MTC100KT1-1103
21-60-20 02	MTC100KT1-1103
21-60-20 03	MTC100KT1-1103
24-21-17 03	MTC100KT1-1103
24-21-17 04	MTC100KT1-1103
27-24-10 02	MTC100KT1-1103
27-24-10 03	MTC100KT1-1103
21-30-10 02	MTC100YH1-004
21-60-20 02	MTC100YH1-004
21-60-20 03	MTC100YH1-004
24-21-17 03	MTC100YH1-004
24-21-17 04	MTC100YH1-004
27-24-10 02	MTC100YH1-004
27-24-10 03	MTC100YH1-004
CG3-R	
21-60-20 03	MTC100YC1-006
24-21-17 04	MTC100YC1-006
27-24-10 03	MTC100YC1-006
21-60-20 03	MTC100YH1-004
24-21-17 04	MTC100YH1-004
27-24-10 03	MTC100YH1-004
CG4-P	
27-61-20 04	MTC100KTI-1102
73-20-02 05	MTC100KTI-1102
21-60-10 08	MTC100KT1-1101
21-60-10 10	MTC100KT1-1101
21-60-10 11	MTC100KT1-1101
26-10-30 03	MTC100KT1-1101
27-61-20 04	MTC100KT1-1101
28-21-05 02	MTC100KT1-1101
28-21-05 03	MTC100KT1-1101
28-21-05 04	MTC100KT1-1101
73-20-02 05	MTC100KT1-1101
21-60-10 08	MTC100KT1-1102
21-60-10 10	MTC100KT1-1102
21-60-10 11	MTC100KT1-1102
26-10-30 03	MTC100KT1-1102
28-21-05 02	MTC100KT1-1102
28-21-05 03	MTC100KT1-1102
28-21-05 04	MTC100KT1-1102
21-60-10 08	MTC100YH1-003
21-60-10 10	MTC100YH1-003
21-60-10 11	MTC100YH1-003
26-10-30 03	MTC100YH1-003
27-61-20 04	MTC100YH1-003
28-21-05 02	MTC100YH1-003
28-21-05 03	MTC100YH1-003

IDENT CH-SECT-UNIT-FIG	PART NUMBER
CG4-P	
28-21-05 04	MTC100YH1-003
73-20-02 05	MTC100YH1-003
CG4-P	
21-60-10 11	MTC100YC1-005
26-10-30 03	MTC100YC1-005
28-21-05 04	MTC100YC1-005
73-20-02 05	MTC100YC1-005
21-60-10 11	MTC100YH1-003
26-10-30 03	MTC100YH1-003
28-21-05 04	MTC100YH1-003
73-20-02 05	MTC100YH1-003
CG4-R	
21-60-10 08	MTC100KT1-1103
21-60-10 10	MTC100KT1-1103
21-60-10 11	MTC100KT1-1103
26-10-30 03	MTC100KT1-1103
27-61-20 04	MTC100KT1-1103
28-21-05 02	MTC100KT1-1103
28-21-05 03	MTC100KT1-1103
28-21-05 04	MTC100KT1-1103
73-20-02 05	MTC100KT1-1103
21-60-10 08	MTC100KT1-1104
21-60-10 10	MTC100KT1-1104
21-60-10 11	MTC100KT1-1104
26-10-30 03	MTC100KT1-1104
27-61-20 04	MTC100KT1-1104
28-21-05 02	MTC100KT1-1104
28-21-05 03	MTC100KT1-1104
28-21-05 04	MTC100KT1-1104
73-20-02 05	MTC100KT1-1104
21-60-10 08	MTC100YH1-004
21-60-10 10	MTC100YH1-004
21-60-10 11	MTC100YH1-004
26-10-30 03	MTC100YH1-004
27-61-20 04	MTC100YH1-004
28-21-05 02	MTC100YH1-004
28-21-05 03	MTC100YH1-004
28-21-05 04	MTC100YH1-004
73-20-02 05	MTC100YH1-004
CG4-R	
21-60-10 11	MTC100YC1-006
26-10-30 03	MTC100YC1-006
28-21-05 04	MTC100YC1-006
73-20-02 05	MTC100YC1-006
21-60-10 11	MTC100YH1-004
26-10-30 03	MTC100YH1-004
28-21-05 04	MTC100YH1-004
73-20-02 05	MTC100YH1-004
CG5-P	
21-60-10 08	MTC100KT1-1101

IDENT CH-SECT-UNIT-FIG	PART NUMBER
CG5-P	
21-60-10 10	MTC100KT1-1101
21-60-10 11	MTC100KT1-1101
24-21-17 03	MTC100KT1-1101
24-21-17 04	MTC100KT1-1101
24-30-20 02	MTC100KT1-1101
24-30-20 03	MTC100KT1-1101
26-20-10 03	MTC100KT1-1101
28-21-05 02	MTC100KT1-1101
28-21-05 03	MTC100KT1-1101
28-21-05 04	MTC100KT1-1101
73-20-02 05	MTC100KT1-1101
73-20-10 03	MTC100KT1-1101
21-60-10 08	MTC100KT1-1102
21-60-10 10	MTC100KT1-1102
21-60-10 11	MTC100KT1-1102
24-21-17 03	MTC100KT1-1102
24-21-17 04	MTC100KT1-1102
24-30-20 02	MTC100KT1-1102
24-30-20 03	MTC100KT1-1102
28-21-05 02	MTC100KT1-1102
28-21-05 03	MTC100KT1-1102
28-21-05 04	MTC100KT1-1102
73-20-02 05	MTC100KT1-1102
73-20-10 03	MTC100KT1-1102
26-20-10 03	MTC100KT2-1102
21-60-10 08	MTC100YH1-003
21-60-10 10	MTC100YH1-003
21-60-10 11	MTC100YH1-003
24-21-17 03	MTC100YH1-003
24-21-17 04	MTC100YH1-003
24-30-20 02	MTC100YH1-003
24-30-20 03	MTC100YH1-003
26-20-10 03	MTC100YH1-003
28-21-05 02	MTC100YH1-003
28-21-05 03	MTC100YH1-003
28-21-05 04	MTC100YH1-003
73-20-02 05	MTC100YH1-003
73-20-10 03	MTC100YH1-003
CG5-P	
21-60-10 11	MTC100YC1-005
24-21-17 04	MTC100YC1-005
24-30-20 02	MTC100YC1-005
24-30-20 03	MTC100YC1-005
26-20-10 03	MTC100YC1-005
28-21-05 04	MTC100YC1-005
73-20-02 05	MTC100YC1-005
73-20-10 03	MTC100YC1-005
21-60-10 11	MTC100YH1-003
24-21-17 04	MTC100YH1-003
24-30-20 02	MTC100YH1-003

IDENT CH-SECT-UNIT-FIG	PART NUMBER
CG5-P	
24-30-20 03	MTC100YH1-003
26-20-10 03	MTC100YH1-003
28-21-05 04	MTC100YH1-003
73-20-02 05	MTC100YH1-003
73-20-10 03	MTC100YH1-003
CG5-R	
21-60-10 08	MTC100KT1-1103
21-60-10 10	MTC100KT1-1103
21-60-10 11	MTC100KT1-1103
24-21-17 03	MTC100KT1-1103
24-21-17 04	MTC100KT1-1103
24-30-20 02	MTC100KT1-1103
24-30-20 03	MTC100KT1-1103
26-20-10 03	MTC100KT1-1103
28-21-05 02	MTC100KT1-1103
28-21-05 03	MTC100KT1-1103
28-21-05 04	MTC100KT1-1103
73-20-02 05	MTC100KT1-1103
73-20-10 03	MTC100KT1-1103
21-60-10 08	MTC100KT1-1104
21-60-10 10	MTC100KT1-1104
21-60-10 11	MTC100KT1-1104
24-21-17 03	MTC100KT1-1104
24-21-17 04	MTC100KT1-1104
24-30-20 02	MTC100KT1-1104
24-30-20 03	MTC100KT1-1104
28-21-05 02	MTC100KT1-1104
28-21-05 03	MTC100KT1-1104
28-21-05 04	MTC100KT1-1104
73-20-02 05	MTC100KT1-1104
73-20-10 03	MTC100KT1-1104
26-20-10 03	MTC100KT2-1104
21-60-10 08	MTC100YH1-004
21-60-10 10	MTC100YH1-004
21-60-10 11	MTC100YH1-004
24-21-17 03	MTC100YH1-004
24-21-17 04	MTC100YH1-004
24-30-20 02	MTC100YH1-004
24-30-20 03	MTC100YH1-004
26-20-10 03	MTC100YH1-004
28-21-05 02	MTC100YH1-004
28-21-05 03	MTC100YH1-004
28-21-05 04	MTC100YH1-004
73-20-02 05	MTC100YH1-004
73-20-10 03	MTC100YH1-004
CG5-R	
21-60-10 11	MTC100YC1-006
24-21-17 04	MTC100YC1-006
24-30-20 02	MTC100YC1-006
24-30-20 03	MTC100YC1-006

IDENT CH-SECT-UNIT-FIG	PART NUMBER
CG5-R	
26-20-10 03	MTC100YC1-006
28-21-05 04	MTC100YC1-006
73-20-02 05	MTC100YC1-006
73-20-10 03	MTC100YC1-006
21-60-10 11	MTC100YH1-004
24-21-17 04	MTC100YH1-004
24-30-20 02	MTC100YH1-004
24-30-20 03	MTC100YH1-004
26-20-10 03	MTC100YH1-004
28-21-05 04	MTC100YH1-004
73-20-02 05	MTC100YH1-004
73-20-10 03	MTC100YH1-004
CG6-P	
21-60-10 08	MTC100KT2-1101
21-60-10 10	MTC100KT2-1101
21-60-10 11	MTC100KT2-1101
27-33-00 05	MTC100KT2-1101
27-33-00 07	MTC100KT2-1101
28-21-05 02	MTC100KT2-1101
28-21-05 03	MTC100KT2-1101
28-21-05 04	MTC100KT2-1101
30-40-15 07	MTC100KT2-1101
30-40-15 10	MTC100KT2-1101
30-40-15 11	MTC100KT2-1101
30-40-15 12	MTC100KT2-1101
30-40-20 03	MTC100KT2-1101
30-40-20 05	MTC100KT2-1101
31-50-01 04	MTC100KT2-1101
31-50-01 07	MTC100KT2-1101
31-50-01 08	MTC100KT2-1101
31-50-01 09	MTC100KT2-1101
31-50-01 14	MTC100KT2-1101
32-60-10 04	MTC100KT2-1101
33-10-05 05	MTC100KT2-1101
33-10-05 07	MTC100KT2-1101
33-10-05 08	MTC100KT2-1101
33-10-05 09	MTC100KT2-1101
33-10-05 11	MTC100KT2-1101
33-40-20 04	MTC100KT2-1101
33-40-30 03	MTC100KT2-1101
80-10-10 04	MTC100KT2-1101
21-60-10 08	MTC100KT2-1102
21-60-10 10	MTC100KT2-1102
21-60-10 11	MTC100KT2-1102
27-33-00 05	MTC100KT2-1102
27-33-00 07	MTC100KT2-1102
28-21-05 02	MTC100KT2-1102
28-21-05 03	MTC100KT2-1102
28-21-05 04	MTC100KT2-1102
30-40-15 07	MTC100KT2-1102

IDENT CH-SECT-UNIT-FIG	PART NUMBER
CG6-P	
30-40-15 10	MTC100KT2-1102
30-40-15 11	MTC100KT2-1102
30-40-15 12	MTC100KT2-1102
30-40-20 03	MTC100KT2-1102
30-40-20 05	MTC100KT2-1102
31-50-01 04	MTC100KT2-1102
31-50-01 07	MTC100KT2-1102
31-50-01 08	MTC100KT2-1102
31-50-01 09	MTC100KT2-1102
31-50-01 14	MTC100KT2-1102
32-60-10 04	MTC100KT2-1102
33-10-05 05	MTC100KT2-1102
33-10-05 07	MTC100KT2-1102
33-10-05 08	MTC100KT2-1102
33-10-05 09	MTC100KT2-1102
33-10-05 11	MTC100KT2-1102
33-40-20 04	MTC100KT2-1102
33-40-30 03	MTC100KT2-1102
80-10-10 04	MTC100KT2-1102
33-20-10 10	MTC100YC1-001
33-20-10 10	MTC100YC1-002
21-60-10 08	MTC100YH2-009
21-60-10 10	MTC100YH2-009
21-60-10 11	MTC100YH2-009
27-33-00 05	MTC100YH2-009
27-33-00 07	MTC100YH2-009
28-21-05 02	MTC100YH2-009
28-21-05 03	MTC100YH2-009
28-21-05 04	MTC100YH2-009
30-40-15 07	MTC100YH2-009
30-40-15 10	MTC100YH2-009
30-40-15 11	MTC100YH2-009
30-40-15 12	MTC100YH2-009
30-40-20 03	MTC100YH2-009
30-40-20 05	MTC100YH2-009
31-50-01 04	MTC100YH2-009
31-50-01 07	MTC100YH2-009
31-50-01 08	MTC100YH2-009
31-50-01 09	MTC100YH2-009
31-50-01 14	MTC100YH2-009
32-60-10 04	MTC100YH2-009
33-10-05 05	MTC100YH2-009
33-10-05 07	MTC100YH2-009
33-10-05 08	MTC100YH2-009
33-10-05 09	MTC100YH2-009
33-10-05 11	MTC100YH2-009
33-20-10 10	MTC100YH2-009
33-40-20 04	MTC100YH2-009
33-40-30 03	MTC100YH2-009
80-10-10 04	MTC100YH2-009

IDENT CH-SECT-UNIT-FIG	PART NUMBER
CG6-P	
21-60-10 11	MTC100YC1-001
27-33-00 07	MTC100YC1-001
28-21-05 04	MTC100YC1-001
30-40-15 11	MTC100YC1-001
30-40-15 12	MTC100YC1-001
30-40-20 05	MTC100YC1-001
31-50-01 09	MTC100YC1-001
31-50-01 14	MTC100YC1-001
32-60-10 04	MTC100YC1-001
33-10-05 09	MTC100YC1-001
33-10-05 11	MTC100YC1-001
33-40-20 04	MTC100YC1-001
33-40-30 03	MTC100YC1-001
80-10-10 04	MTC100YC1-001
21-60-10 11	MTC100YC1-002
27-33-00 07	MTC100YC1-002
28-21-05 04	MTC100YC1-002
30-40-15 11	MTC100YC1-002
30-40-15 12	MTC100YC1-002
30-40-20 05	MTC100YC1-002
31-50-01 09	MTC100YC1-002
31-50-01 14	MTC100YC1-002
32-60-10 04	MTC100YC1-002
33-10-05 09	MTC100YC1-002
33-10-05 11	MTC100YC1-002
33-40-20 04	MTC100YC1-002
33-40-30 03	MTC100YC1-002
80-10-10 04	MTC100YC1-002
21-60-10 11	MTC100YH2-009
27-33-00 07	MTC100YH2-009
28-21-05 04	MTC100YH2-009
30-40-15 11	MTC100YH2-009
30-40-15 12	MTC100YH2-009
30-40-20 05	MTC100YH2-009
31-50-01 09	MTC100YH2-009
31-50-01 14	MTC100YH2-009
32-60-10 04	MTC100YH2-009
33-10-05 09	MTC100YH2-009
33-10-05 11	MTC100YH2-009
33-40-20 04	MTC100YH2-009
33-40-30 03	MTC100YH2-009
80-10-10 04	MTC100YH2-009
CG6-R	
21-60-10 08	MTC100KT2-1103
21-60-10 10	MTC100KT2-1103
21-60-10 11	MTC100KT2-1103
27-33-00 05	MTC100KT2-1103
27-33-00 07	MTC100KT2-1103
28-21-05 02	MTC100KT2-1103
28-21-05 03	MTC100KT2-1103

IDENT CH-SECT-UNIT-FIG	PART NUMBER
CG6-R	
28-21-05 04	MTC100KT2-1103
30-40-15 07	MTC100KT2-1103
30-40-15 10	MTC100KT2-1103
30-40-15 11	MTC100KT2-1103
30-40-15 12	MTC100KT2-1103
30-40-20 03	MTC100KT2-1103
30-40-20 05	MTC100KT2-1103
31-50-01 04	MTC100KT2-1103
31-50-01 07	MTC100KT2-1103
31-50-01 08	MTC100KT2-1103
31-50-01 09	MTC100KT2-1103
31-50-01 14	MTC100KT2-1103
32-60-10 04	MTC100KT2-1103
33-10-05 05	MTC100KT2-1103
33-10-05 07	MTC100KT2-1103
33-10-05 08	MTC100KT2-1103
33-10-05 09	MTC100KT2-1103
33-10-05 11	MTC100KT2-1103
33-40-20 04	MTC100KT2-1103
33-40-30 03	MTC100KT2-1103
80-10-10 04	MTC100KT2-1103
21-60-10 08	MTC100KT2-1104
21-60-10 10	MTC100KT2-1104
21-60-10 11	MTC100KT2-1104
27-33-00 05	MTC100KT2-1104
27-33-00 07	MTC100KT2-1104
28-21-05 02	MTC100KT2-1104
28-21-05 03	MTC100KT2-1104
28-21-05 04	MTC100KT2-1104
30-40-15 07	MTC100KT2-1104
30-40-15 10	MTC100KT2-1104
30-40-15 11	MTC100KT2-1104
30-40-15 12	MTC100KT2-1104
30-40-20 03	MTC100KT2-1104
30-40-20 05	MTC100KT2-1104
31-50-01 04	MTC100KT2-1104
31-50-01 07	MTC100KT2-1104
31-50-01 08	MTC100KT2-1104
31-50-01 09	MTC100KT2-1104
31-50-01 14	MTC100KT2-1104
32-60-10 04	MTC100KT2-1104
33-10-05 05	MTC100KT2-1104
33-10-05 07	MTC100KT2-1104
33-10-05 08	MTC100KT2-1104
33-10-05 09	MTC100KT2-1104
33-10-05 11	MTC100KT2-1104
33-40-20 04	MTC100KT2-1104
33-40-30 03	MTC100KT2-1104
80-10-10 04	MTC100KT2-1104
33-20-10 10	MTC100YC1-003

IDENT CH-SECT-UNIT-FIG	PART NUMBER
CG6-R	
33-20-10 10	MTC100YC1-004
21-60-10 08	MTC100YH2-010
21-60-10 10	MTC100YH2-010
21-60-10 11	MTC100YH2-010
27-33-00 05	MTC100YH2-010
27-33-00 07	MTC100YH2-010
28-21-05 02	MTC100YH2-010
28-21-05 03	MTC100YH2-010
28-21-05 04	MTC100YH2-010
30-40-15 07	MTC100YH2-010
30-40-15 10	MTC100YH2-010
30-40-15 11	MTC100YH2-010
30-40-15 12	MTC100YH2-010
30-40-20 03	MTC100YH2-010
30-40-20 05	MTC100YH2-010
31-50-01 04	MTC100YH2-010
31-50-01 07	MTC100YH2-010
31-50-01 08	MTC100YH2-010
31-50-01 09	MTC100YH2-010
31-50-01 14	MTC100YH2-010
32-60-10 04	MTC100YH2-010
33-10-05 05	MTC100YH2-010
33-10-05 07	MTC100YH2-010
33-10-05 08	MTC100YH2-010
33-10-05 09	MTC100YH2-010
33-10-05 11	MTC100YH2-010
33-20-10 10	MTC100YH2-010
33-40-20 04	MTC100YH2-010
33-40-30 03	MTC100YH2-010
80-10-10 04	MTC100YH2-010
CG6-R	
21-60-10 11	MTC100YC1-003
27-33-00 07	MTC100YC1-003
28-21-05 04	MTC100YC1-003
30-40-15 11	MTC100YC1-003
30-40-15 12	MTC100YC1-003
30-40-20 05	MTC100YC1-003
31-50-01 09	MTC100YC1-003
31-50-01 14	MTC100YC1-003
32-60-10 04	MTC100YC1-003
33-10-05 09	MTC100YC1-003
33-10-05 11	MTC100YC1-003
33-40-20 04	MTC100YC1-003
33-40-30 03	MTC100YC1-003
80-10-10 04	MTC100YC1-003
21-60-10 11	MTC100YC1-004
27-33-00 07	MTC100YC1-004
28-21-05 04	MTC100YC1-004
30-40-15 11	MTC100YC1-004
30-40-15 12	MTC100YC1-004

IDENT CH-SECT-UNIT-FIG	PART NUMBER
CG6-R	
30-40-20 05	MTC100YC1-004
31-50-01 09	MTC100YC1-004
31-50-01 14	MTC100YC1-004
32-60-10 04	MTC100YC1-004
33-10-05 09	MTC100YC1-004
33-10-05 11	MTC100YC1-004
33-40-20 04	MTC100YC1-004
33-40-30 03	MTC100YC1-004
80-10-10 04	MTC100YC1-004
21-60-10 11	MTC100YH2-010
27-33-00 07	MTC100YH2-010
28-21-05 04	MTC100YH2-010
30-40-15 11	MTC100YH2-010
30-40-15 12	MTC100YH2-010
30-40-20 05	MTC100YH2-010
31-50-01 09	MTC100YH2-010
31-50-01 14	MTC100YH2-010
32-60-10 04	MTC100YH2-010
33-10-05 09	MTC100YH2-010
33-10-05 11	MTC100YH2-010
33-40-20 04	MTC100YH2-010
33-40-30 03	MTC100YH2-010
80-10-10 04	MTC100YH2-010
CG7-P	
21-20-10 03	MTC100KT2-1101
21-60-10 08	MTC100KT2-1101
21-60-10 10	MTC100KT2-1101
21-60-10 11	MTC100KT2-1101
21-60-20 02	MTC100KT2-1101
21-60-20 03	MTC100KT2-1101
26-10-20 02	MTC100KT2-1101
27-33-00 05	MTC100KT2-1101
27-33-00 07	MTC100KT2-1101
28-21-05 02	MTC100KT2-1101
28-21-05 03	MTC100KT2-1101
28-21-05 04	MTC100KT2-1101
30-40-15 07	MTC100KT2-1101
30-40-15 10	MTC100KT2-1101
30-40-15 11	MTC100KT2-1101
30-40-15 12	MTC100KT2-1101
30-40-20 03	MTC100KT2-1101
30-40-20 05	MTC100KT2-1101
31-50-01 04	MTC100KT2-1101
31-50-01 07	MTC100KT2-1101
31-50-01 08	MTC100KT2-1101
31-50-01 09	MTC100KT2-1101
31-50-01 14	MTC100KT2-1101
33-40-10 05	MTC100KT2-1101
33-40-20 04	MTC100KT2-1101
33-50-10 09	MTC100KT2-1101

IDENT CH-SECT-UNIT-FIG	PART NUMBER
CG7-P	
73-20-02 05	MTC100KT2-1101
80-10-10 04	MTC100KT2-1101
21-20-10 03	MTC100KT2-1102
21-60-10 08	MTC100KT2-1102
21-60-10 10	MTC100KT2-1102
21-60-10 11	MTC100KT2-1102
21-60-20 02	MTC100KT2-1102
21-60-20 03	MTC100KT2-1102
26-10-20 02	MTC100KT2-1102
27-33-00 05	MTC100KT2-1102
27-33-00 07	MTC100KT2-1102
28-21-05 02	MTC100KT2-1102
28-21-05 03	MTC100KT2-1102
28-21-05 04	MTC100KT2-1102
30-40-15 07	MTC100KT2-1102
30-40-15 10	MTC100KT2-1102
30-40-15 11	MTC100KT2-1102
30-40-15 12	MTC100KT2-1102
30-40-20 03	MTC100KT2-1102
30-40-20 05	MTC100KT2-1102
31-50-01 04	MTC100KT2-1102
31-50-01 07	MTC100KT2-1102
31-50-01 08	MTC100KT2-1102
31-50-01 09	MTC100KT2-1102
31-50-01 14	MTC100KT2-1102
33-40-10 05	MTC100KT2-1102
33-40-20 04	MTC100KT2-1102
33-50-10 09	MTC100KT2-1102
73-20-02 05	MTC100KT2-1102
80-10-10 04	MTC100KT2-1102
33-40-10 06	MTC100YC1-001
33-40-10 06	MTC100YC1-002
21-20-10 03	MTC100YH2-009
21-60-10 08	MTC100YH2-009
21-60-10 10	MTC100YH2-009
21-60-10 11	MTC100YH2-009
21-60-20 02	MTC100YH2-009
21-60-20 03	MTC100YH2-009
26-10-20 02	MTC100YH2-009
27-33-00 05	MTC100YH2-009
27-33-00 07	MTC100YH2-009
28-21-05 02	MTC100YH2-009
28-21-05 03	MTC100YH2-009
28-21-05 04	MTC100YH2-009
30-40-15 07	MTC100YH2-009
30-40-15 10	MTC100YH2-009
30-40-15 11	MTC100YH2-009
30-40-15 12	MTC100YH2-009
30-40-20 03	MTC100YH2-009
30-40-20 05	MTC100YH2-009

IDENT CH-SECT-UNIT-FIG	PART NUMBER
CG7-P	
31-50-01 04	MTC100YH2-009
31-50-01 07	MTC100YH2-009
31-50-01 08	MTC100YH2-009
31-50-01 09	MTC100YH2-009
31-50-01 14	MTC100YH2-009
33-40-10 05	MTC100YH2-009
33-40-10 06	MTC100YH2-009
33-40-20 04	MTC100YH2-009
33-50-10 09	MTC100YH2-009
73-20-02 05	MTC100YH2-009
80-10-10 04	MTC100YH2-009
CG7-P	
21-20-10 03	MTC100YC1-001
21-60-10 11	MTC100YC1-001
21-60-20 03	MTC100YC1-001
26-10-20 02	MTC100YC1-001
27-33-00 07	MTC100YC1-001
28-21-05 04	MTC100YC1-001
30-40-15 11	MTC100YC1-001
30-40-15 12	MTC100YC1-001
30-40-20 05	MTC100YC1-001
31-50-01 09	MTC100YC1-001
31-50-01 14	MTC100YC1-001
33-40-10 05	MTC100YC1-001
33-40-20 04	MTC100YC1-001
33-50-10 09	MTC100YC1-001
73-20-02 05	MTC100YC1-001
80-10-10 04	MTC100YC1-001
21-20-10 03	MTC100YC1-002
21-60-10 11	MTC100YC1-002
21-60-20 03	MTC100YC1-002
26-10-20 02	MTC100YC1-002
27-33-00 07	MTC100YC1-002
28-21-05 04	MTC100YC1-002
30-40-15 11	MTC100YC1-002
30-40-15 12	MTC100YC1-002
30-40-20 05	MTC100YC1-002
31-50-01 09	MTC100YC1-002
31-50-01 14	MTC100YC1-002
33-40-10 05	MTC100YC1-002
33-40-20 04	MTC100YC1-002
33-50-10 09	MTC100YC1-002
73-20-02 05	MTC100YC1-002
80-10-10 04	MTC100YC1-002
21-20-10 03	MTC100YH2-009
21-60-10 11	MTC100YH2-009
21-60-20 03	MTC100YH2-009
26-10-20 02	MTC100YH2-009
27-33-00 07	MTC100YH2-009
28-21-05 04	MTC100YH2-009

IDENT CH-SECT-UNIT-FIG	PART NUMBER
CG7-P	
30-40-15 11	MTC100YH2-009
30-40-15 12	MTC100YH2-009
30-40-20 05	MTC100YH2-009
31-50-01 09	MTC100YH2-009
31-50-01 14	MTC100YH2-009
33-40-10 05	MTC100YH2-009
33-40-20 04	MTC100YH2-009
33-50-10 09	MTC100YH2-009
73-20-02 05	MTC100YH2-009
80-10-10 04	MTC100YH2-009
CG7-R	
73-20-02 05	MTC100KT2-1101
73-20-02 05	MTC100KT2-1102
21-20-10 03	MTC100KT2-1103
21-60-10 08	MTC100KT2-1103
21-60-10 10	MTC100KT2-1103
21-60-10 11	MTC100KT2-1103
21-60-20 02	MTC100KT2-1103
21-60-20 03	MTC100KT2-1103
26-10-20 02	MTC100KT2-1103
27-33-00 05	MTC100KT2-1103
27-33-00 07	MTC100KT2-1103
28-21-05 02	MTC100KT2-1103
28-21-05 03	MTC100KT2-1103
28-21-05 04	MTC100KT2-1103
30-40-15 07	MTC100KT2-1103
30-40-15 10	MTC100KT2-1103
30-40-15 11	MTC100KT2-1103
30-40-15 12	MTC100KT2-1103
30-40-20 03	MTC100KT2-1103
30-40-20 05	MTC100KT2-1103
31-50-01 04	MTC100KT2-1103
31-50-01 07	MTC100KT2-1103
31-50-01 08	MTC100KT2-1103
31-50-01 09	MTC100KT2-1103
31-50-01 14	MTC100KT2-1103
33-40-10 05	MTC100KT2-1103
33-40-20 04	MTC100KT2-1103
33-50-10 09	MTC100KT2-1103
80-10-10 04	MTC100KT2-1103
21-20-10 03	MTC100KT2-1104
21-60-10 08	MTC100KT2-1104
21-60-10 10	MTC100KT2-1104
21-60-10 11	MTC100KT2-1104
21-60-20 02	MTC100KT2-1104
21-60-20 03	MTC100KT2-1104
26-10-20 02	MTC100KT2-1104
27-33-00 05	MTC100KT2-1104
27-33-00 07	MTC100KT2-1104
28-21-05 02	MTC100KT2-1104

IDENT CH-SECT-UNIT-FIG	PART NUMBER
CG7-R	
28-21-05 03	MTC100KT2-1104
28-21-05 04	MTC100KT2-1104
30-40-15 07	MTC100KT2-1104
30-40-15 10	MTC100KT2-1104
30-40-15 11	MTC100KT2-1104
30-40-15 12	MTC100KT2-1104
30-40-20 03	MTC100KT2-1104
30-40-20 05	MTC100KT2-1104
31-50-01 04	MTC100KT2-1104
31-50-01 07	MTC100KT2-1104
31-50-01 08	MTC100KT2-1104
31-50-01 09	MTC100KT2-1104
31-50-01 14	MTC100KT2-1104
33-40-10 05	MTC100KT2-1104
33-40-20 04	MTC100KT2-1104
33-50-10 09	MTC100KT2-1104
80-10-10 04	MTC100KT2-1104
33-40-10 06	MTC100YC1-003
33-40-10 06	MTC100YC1-004
21-20-10 03	MTC100YH2-010
21-60-10 08	MTC100YH2-010
21-60-10 10	MTC100YH2-010
21-60-10 11	MTC100YH2-010
21-60-20 02	MTC100YH2-010
21-60-20 03	MTC100YH2-010
26-10-20 02	MTC100YH2-010
27-33-00 05	MTC100YH2-010
27-33-00 07	MTC100YH2-010
28-21-05 02	MTC100YH2-010
28-21-05 03	MTC100YH2-010
28-21-05 04	MTC100YH2-010
30-40-15 07	MTC100YH2-010
30-40-15 10	MTC100YH2-010
30-40-15 11	MTC100YH2-010
30-40-15 12	MTC100YH2-010
30-40-20 03	MTC100YH2-010
30-40-20 05	MTC100YH2-010
31-50-01 04	MTC100YH2-010
31-50-01 07	MTC100YH2-010
31-50-01 08	MTC100YH2-010
31-50-01 09	MTC100YH2-010
31-50-01 14	MTC100YH2-010
33-40-10 05	MTC100YH2-010
33-40-10 06	MTC100YH2-010
33-40-20 04	MTC100YH2-010
33-50-10 09	MTC100YH2-010
73-20-02 05	MTC100YH2-010
80-10-10 04	MTC100YH2-010
CG7-R	
73-20-02 05	MTC100YC1-001

IDENT CH-SECT-UNIT-FIG	PART NUMBER
CG7-R	
73-20-02 05	MTC100YC1-002
21-20-10 03	MTC100YC1-003
21-60-10 11	MTC100YC1-003
21-60-20 03	MTC100YC1-003
26-10-20 02	MTC100YC1-003
27-33-00 07	MTC100YC1-003
28-21-05 04	MTC100YC1-003
30-40-15 11	MTC100YC1-003
30-40-15 12	MTC100YC1-003
30-40-20 05	MTC100YC1-003
31-50-01 09	MTC100YC1-003
31-50-01 14	MTC100YC1-003
33-40-10 05	MTC100YC1-003
33-40-20 04	MTC100YC1-003
33-50-10 09	MTC100YC1-003
80-10-10 04	MTC100YC1-003
21-20-10 03	MTC100YC1-004
21-60-10 11	MTC100YC1-004
21-60-20 03	MTC100YC1-004
26-10-20 02	MTC100YC1-004
27-33-00 07	MTC100YC1-004
28-21-05 04	MTC100YC1-004
30-40-15 11	MTC100YC1-004
30-40-15 12	MTC100YC1-004
30-40-20 05	MTC100YC1-004
31-50-01 09	MTC100YC1-004
31-50-01 14	MTC100YC1-004
33-40-10 05	MTC100YC1-004
33-40-20 04	MTC100YC1-004
33-50-10 09	MTC100YC1-004
80-10-10 04	MTC100YC1-004
21-20-10 03	MTC100YH2-010
21-60-10 11	MTC100YH2-010
21-60-20 03	MTC100YH2-010
26-10-20 02	MTC100YH2-010
27-33-00 07	MTC100YH2-010
28-21-05 04	MTC100YH2-010
30-40-15 11	MTC100YH2-010
30-40-15 12	MTC100YH2-010
30-40-20 05	MTC100YH2-010
31-50-01 09	MTC100YH2-010
31-50-01 14	MTC100YH2-010
33-40-10 05	MTC100YH2-010
33-40-20 04	MTC100YH2-010
33-50-10 09	MTC100YH2-010
73-20-02 05	MTC100YH2-010
80-10-10 04	MTC100YH2-010
CG8-P	
80-10-10 04	MTCR161-04P
CG8-R	

IDENT CH-SECT-UNIT-FIG	PART NUMBER
CG8-R	
80-10-10 04	MTCR101-04S
CG9-P	
33-40-10 06	MTCR161-04P
CG9-P	
33-40-10 05	MTCR161-04P
80-10-10 04	MTCR161-04P
CG9-R	
33-40-10 06	MTCR101-04S
CG9-R	
33-40-10 05	MTCR101-04S
80-10-10 04	MTCR101-04S
CH	
33-10-05 09	1PD1862-68NS
33-10-05 05	25NF9557A
33-10-05 07	25NF9557A
33-10-05 08	25NF9557A
33-10-05 09	25NF9557A
33-10-05 11	25NF9557A
CH-DB	
28-41-30 02	99-212
CJ	
33-10-05 09	1PD1862-68NS
33-10-05 05	25NF9557A
33-10-05 07	25NF9557A
33-10-05 08	25NF9557A
33-10-05 09	25NF9557A
33-10-05 11	25NF9557A
CJ-DAB	
24-21-17 03	M12883-40-20
24-21-17 04	M12883-40-20
24-21-17 03	M401D4F
24-21-17 04	M401D4F
CK	
33-10-05 05	25DC237-9
33-10-05 07	25DC237-9
33-10-05 08	25DC237-9
33-10-05 09	25DC237-9
33-10-05 11	25DC237-9
CL	
33-10-05 05	25DC237-9
33-10-05 07	25DC237-9
33-10-05 08	25DC237-9
33-10-05 09	25DC237-9
33-10-05 11	25DC237-9
CL-DAB	
30-10-10 11	M302D4L
30-10-10 11	S302D1B0
CL-ZK	
73-20-01 05	M12883-41-16
73-20-01 05	M300-1264

IDENT CH-SECT-UNIT-FIG	PART NUMBER
CM-DAB	
24-21-17 03	M301D4F
24-21-17 04	M301D4F
24-21-17 03	S300B1B0
24-21-17 04	S300B1B0
CM-R	
27-33-00 05	MS3154-16
27-33-00 07	MS3154-16
27-33-00 05	MS3470L16-26SN
27-33-00 07	MS3470L16-26SN
CM-ZK	
73-20-02 05	M12883-41-16
73-20-02 05	M300-1264
CP	
33-10-05 05	25-8NF2921-1A
33-10-05 07	25-8NF2921-1A
33-10-05 08	25-8NF2921-1A
33-10-05 09	25-8NF2921-1A
33-10-05 11	25-8NF2921-1A
CP-ZK	
24-50-01 05	M12883-41-16
24-50-01 06	M12883-41-16
24-50-01 07	M12883-41-16
49-60-30 06	M12883-41-16
49-60-30 08	M12883-41-16
49-60-30 09	M12883-41-16
49-60-30 11	M12883-41-16
24-50-01 05	M300-1264
24-50-01 06	M300-1264
24-50-01 07	M300-1264
49-60-30 06	M300-1264
49-60-30 08	M300-1264
49-60-30 09	M300-1264
49-60-30 11	M300-1264
CPRNV	
34-30-10 53	79100
CPRTE	
34-30-20 53	82-849
CPRTG	
34-30-10 53	79100
CP211	
34-30-10 53	43TNC50-0-1
34-30-20 53	43TNC50-0-1
CQ	
27-30-10 07	HWBUN1146D10B
27-30-10 08	HWBUN1146D10B
27-33-00 05	HWBUN1146D10B
27-33-00 07	HWBUN1146D10B
CQ-ZK	
30-30-20 02	M12883-41-16
30-30-20 02	M300-1264

IDENT CH-SECT-UNIT-FIG	PART NUMBER
CR	
27-30-10 07	HWBUN1146D10B
27-30-10 08	HWBUN1146D10B
27-33-00 05	HWBUN1146D10B
27-33-00 07	HWBUN1146D10B
CR-ZK	
30-30-20 02	M12883-41-16
30-30-20 02	M300-1264
CR1-ZKA	
49-60-30 06	BYX42-600
49-60-30 08	BYX42-600
49-60-30 09	BYX42-600
CR2-ZKA	
49-60-30 06	BYX42-600
49-60-30 08	BYX42-600
49-60-30 09	BYX42-600
CR3-ZKA	
49-60-30 06	BYX42-600
49-60-30 08	BYX42-600
49-60-30 09	BYX42-600
49-60-30 11	BYX42-600
CR4-ZKA	
49-60-30 06	BYX42-600
49-60-30 08	BYX42-600
49-60-30 09	BYX42-600
49-60-30 11	BYX42-600
CR6-ZKA	
49-60-30 06	BYX42-600
49-60-30 08	BYX42-600
49-60-30 09	BYX42-600
49-60-30 11	BYX42-600
CR7-ZKA	
49-60-30 06	BYX42-600
CS	
27-33-00 05	1703-12
30-30-20 02	1703-12
CS-CG	
33-50-10 09	2TP1-3
CS-CG	
33-50-10 09	2TP1-3M
CS-LH	
27-33-00 07	1703-12
CS-R	
30-30-20 02	GTR62-14MACS1
30-30-20 02	MS3470L14-19SN
CS-RH	
27-33-00 07	1703-12
CS-ZK	
30-30-20 02	M12883-41-16
30-30-20 02	M300-1264
CT-ZK	

IDENT CH-SECT-UNIT-FIG	PART NUMBER
CT-ZK	
24-21-17 03	HWBUN1146S10B
24-21-17 04	HWBUN1146S103
24-30-10 02	HWBUN1146S10B
24-30-20 02	HWBUN1146S10B
24-30-20 03	HWBUN1146S10B
49-60-10 05	HWBUN1146S10B
49-60-30 06	HWBUN1146S10B
49-60-30 08	HWBUN1146S10B
49-60-30 09	HWBUN1146S10B
49-60-30 11	HWBUN1146S10B
80-10-10 04	HWBUN1146S10B
CTA-BA	
78-30-05 01	HWBUN1736S5B
78-30-05 02	HWBUN1736S5B
CU	
27-33-00 05	1703-12
30-30-20 02	1703-12
CU-CG	
33-20-10 10	2TP1-10M
CU-R	
30-30-20 02	GTR62-14MACS1
30-30-20 02	MS3470L14-19SN
CV	
29-31-10 02	422253-15
30-80-10 02	422253-15
30-80-10 03	422253-15
31-20-35 02	422253-15
31-20-35 03	422253-15
31-20-60 02	422253-15
32-60-10 04	422253-15
33-10-05 05	422253-15
33-10-05 07	422253-15
33-10-05 08	422253-15
33-10-05 09	422253-15
33-10-05 11	422253-15
33-10-20 04	422253-15
33-10-20 07	422253-15
33-10-20 08	422253-15
33-40-15 02	422253-15
33-50-10 09	422253-15
CW-A	
33-10-05 05	MBC17
33-10-05 07	MBC17
33-10-05 08	MBC17
33-10-05 09	MBC17
33-10-05 11	MBC17
CW-A	
33-10-05 05	MBC004
33-10-05 07	MBC004
33-10-05 08	MBC004

IDENT CH-SECT-UNIT-FIG	PART NUMBER
CW-A	
33-10-05 09	MBC004
33-10-05 11	MBC004
CW-B	
33-10-05 05	MBC17
33-10-05 07	MBC17
33-10-05 08	MBC17
33-10-05 09	MBC17
33-10-05 11	MBC17
CW-B	
33-10-05 05	MBC004
33-10-05 07	MBC004
33-10-05 08	MBC004
33-10-05 09	MBC004
33-10-05 11	MBC004
CW-ZK	
24-50-01 05	HWBUN1146S10B
24-50-01 06	HWBUN1146S10B
24-50-01 07	HWBUN1146S10B
27-00-10 03	*HWBUN1146S10B*
27-00-10 04	HWBUN1146S10B
32-60-30 02	HWBUN1146S10B
32-60-30 03	HWBUN1146S10B
CX-A	
33-10-05 05	MBC17
33-10-05 07	MBC17
33-10-05 08	MBC17
33-10-05 09	MBC17
33-10-05 11	MBC17
CX-A	
33-10-05 05	MBC004
33-10-05 07	MBC004
33-10-05 08	MBC004
33-10-05 09	MBC004
33-10-05 11	MBC004
CX-B	
33-10-05 05	MBC17
33-10-05 07	MBC17
33-10-05 08	MBC17
33-10-05 09	MBC17
33-10-05 11	MBC17
CX-B	
33-10-05 05	MBC004
33-10-05 07	MBC004
33-10-05 08	MBC004
33-10-05 09	MBC004
33-10-05 11	MBC004
CX-ZK	
30-30-20 02	M12883-41-16
30-30-20 02	M300-1264
CY1-P	

IDENT CH-SECT-UNIT-FIG	PART NUMBER
CY1-P	
31-50-01 04	MTC100KT2-1103
31-50-01 07	MTC100KT2-1103
31-50-01 08	MTC100KT2-1103
31-50-01 09	MTC100KT2-1103
31-50-01 14	MTC100KT2-1103
33-10-05 05	MTC100KT2-1103
33-10-05 07	MTC100KT2-1103
33-10-05 08	MTC100KT2-1103
33-10-05 09	MTC100KT2-1103
33-10-05 11	MTC100KT2-1103
33-10-20 04	MTC100KT2-1103
33-10-20 07	MTC100KT2-1103
33-10-20 08	MTC100KT2-1103
31-50-01 04	MTC100KT2-1104
31-50-01 07	MTC100KT2-1104
31-50-01 08	MTC100KT2-1104
31-50-01 09	MTC100KT2-1104
31-50-01 14	MTC100KT2-1104
33-10-05 05	*MTC100KT2-1104*
33-10-05 07	MTC100KT2-1104
33-10-05 08	MTC100KT2-1104
33-10-05 09	MTC100KT2-1104
33-10-05 11	MTC100KT2-1104
33-10-20 04	MTC100KT2-1104
33-10-20 07	MTC100KT2-1104
33-10-20 08	MTC100KT2-1104
31-50-01 04	MTC100YH2-009
31-50-01 07	MTC100YH2-009
31-50-01 08	MTC100YH2-009
31-50-01 09	MTC100YH2-009
31-50-01 14	MTC100YH2-009
33-10-05 05	MTC100YH2-009
33-10-05 07	MTC100YH2-009
33-10-05 08	MTC100YH2-009
33-10-05 09	MTC100YH2-009
33-10-05 11	MTC100YH2-009
33-10-20 04	MTC100YH2-009
33-10-20 07	MTC100YH2-009
33-10-20 08	MTC100YH2-009
CY1-P	
31-50-01 09	MTC100YC1-003
31-50-01 14	MTC100YC1-003
33-10-05 09	MTC100YC1-003
33-10-05 11	MTC100YC1-003
33-10-20 08	MTC100YC1-003
31-50-01 09	MTC100YC1-004
31-50-01 14	MTC100YC1-004
33-10-05 09	MTC100YC1-004
33-10-05 11	MTC100YC1-004
33-10-20 08	MTC100YC1-004

IDENT CH-SECT-UNIT-FIG	PART NUMBER
CY1-P	
31-50-01 09	MTC100YH2-009
31-50-01 14	MTC100YH2-009
33-10-05 09	MTC100YH2-009
33-10-05 11	MTC100YH2-009
33-10-20 08	MTC100YH2-009
CY1-R	
31-50-01 04	MTC100KT2-1101
31-50-01 07	MTC100KT2-1101
31-50-01 08	MTC100KT2-1101
31-50-01 09	MTC100KT2-1101
31-50-01 14	MTC100KT2-1101
33-10-05 05	MTC100KT2-1101
33-10-05 07	MTC100KT2-1101
33-10-05 08	MTC100KT2-1101
33-10-05 09	MTC100KT2-1101
33-10-05 11	MTC100KT2-1101
33-10-20 04	MTC100KT2-1101
33-10-20 07	MTC100KT2-1101
33-10-20 08	MTC100KT2-1101
31-50-01 04	MTC100KT2-1102
31-50-01 07	MTC100KT2-1102
31-50-01 08	MTC100KT2-1102
31-50-01 09	MTC100KT2-1102
31-50-01 14	MTC100KT2-1102
33-10-05 05	MTC100KT2-1102
33-10-05 07	MTC100KT2-1102
33-10-05 08	MTC100KT2-1102
33-10-05 09	MTC100KT2-1102
33-10-05 11	MTC100KT2-1102
33-10-20 04	MTC100KT2-1102
33-10-20 07	MTC100KT2-1102
33-10-20 08	MTC100KT2-1102
31-50-01 04	MTC100YH2-010
31-50-01 07	MTC100YH2-010
31-50-01 08	MTC100YH2-010
31-50-01 09	MTC100YH2-010
31-50-01 14	MTC100YH2-010
33-10-05 05	MTC100YH2-010
33-10-05 07	MTC100YH2-010
33-10-05 08	MTC100YH2-010
33-10-05 09	MTC100YH2-010
33-10-05 11	MTC100YH2-010
33-10-20 04	MTC100YH2-010
33-10-20 07	MTC100YH2-010
33-10-20 08	MTC100YH2-010
CY1-R	
31-50-01 09	MTC100YC1-001
31-50-01 14	MTC100YC1-001
33-10-05 09	MTC100YC1-001
33-10-05 11	MTC100YC1-001

IDENT CH-SECT-UNIT-FIG	PART NUMBER
CY1-R	
33-10-20 08	MTC100YC1-001
31-50-01 09	MTC100YC1-002
31-50-01 14	MTC100YC1-002
33-10-05 09	MTC100YC1-002
33-10-05 11	MTC100YC1-002
33-10-20 08	MTC100YC1-002
31-50-01 09	MTC100YH2-010
31-50-01 14	MTC100YH2-010
33-10-05 09	MTC100YH2-010
33-10-05 11	MTC100YH2-010
33-10-20 08	MTC100YH2-010
CY3-P	
33-10-05 05	MTC100KT2-1103
33-10-05 07	MTC100KT2-1103
33-10-05 08	MTC100KT2-1103
33-10-05 09	MTC100KT2-1103
33-10-05 11	MTC100KT2-1103
33-10-10 31	MTC100KT2-1103
33-10-20 04	MTC100KT2-1103
33-10-20 07	MTC100KT2-1103
33-10-20 08	MTC100KT2-1103
33-10-05 05	MTC100KT2-1104
33-10-05 07	MTC100KT2-1104
33-10-05 08	MTC100KT2-1104
33-10-05 09	MTC100KT2-1104
33-10-05 11	MTC100KT2-1104
33-10-10 31	MTC100KT2-1104
33-10-20 04	MTC100KT2-1104
33-10-20 07	MTC100KT2-1104
33-10-20 08	MTC100KT2-1104
33-10-05 05	MTC100YH2-009
33-10-05 07	MTC100YH2-009
33-10-05 08	MTC100YH2-009
33-10-05 09	MTC100YH2-009
33-10-05 11	MTC100YH2-009
33-10-10 31	MTC100YH2-009
33-10-20 04	MTC100YH2-009
33-10-20 07	MTC100YH2-009
33-10-20 08	MTC100YH2-009
CY3-P	
33-10-05 09	MTC100YC1-003
33-10-05 11	MTC100YC1-003
33-10-20 08	MTC100YC1-003
33-10-05 09	MTC100YC1-004
33-10-05 11	MTC100YC1-004
33-10-20 08	MTC100YC1-004
33-10-05 09	MTC100YH2-009
33-10-05 11	MTC100YH2-009
33-10-20 08	MTC100YH2-009
CY3-R	

IDENT CH-SECT-UNIT-FIG	PART NUMBER
CY3-R	
33-10-05 05	MTC100KT2-1101
33-10-05 07	MTC100KT2-1101
33-10-05 08	MTC100KT2-1101
33-10-05 09	MTC100KT2-1101
33-10-05 11	MTC100KT2-1101
33-10-10 31	MTC100KT2-1101
33-10-20 04	MTC100KT2-1101
33-10-20 07	MTC100KT2-1101
33-10-20 08	MTC100KT2-1101
33-10-05 05	MTC100KT2-1102
33-10-05 07	MTC100KT2-1102
33-10-05 08	MTC100KT2-1102
33-10-05 09	MTC100KT2-1102
33-10-05 11	MTC100KT2-1102
33-10-10 31	MTC100KT2-1102
33-10-20 04	MTC100KT2-1102
33-10-20 07	MTC100KT2-1102
33-10-20 08	MTC100KT2-1102
33-10-05 05	MTC100YH2-010
33-10-05 07	MTC100YH2-010
33-10-05 08	MTC100YH2-010
33-10-05 09	MTC100YH2-010
33-10-05 11	MTC100YH2-010
33-10-10 31	MTC100YH2-010
33-10-20 04	MTC100YH2-010
33-10-20 07	MTC100YH2-010
33-10-20 08	MTC100YH2-010
CY3-R	
33-10-05 09	MTC100YC1-001
33-10-05 11	MTC100YC1-001
33-10-20 08	MTC100YC1-001
33-10-05 09	MTC100YC1-002
33-10-05 11	MTC100YC1-002
33-10-20 08	MTC100YC1-002
33-10-05 09	MTC100YH2-010
33-10-05 11	MTC100YH2-010
33-10-20 08	MTC100YH2-010
CZ-BA	
33-10-05 05	A6795C
33-10-05 07	A6795C
33-10-05 08	A6795C
33-10-05 09	A6795C
33-10-05 11	A6795C
CZ-ZK	
73-20-10 03	HWBUN1736S5B
D	
33-10-20 04	140-4537
33-10-20 08	140-4538
33-10-20 07	404-8-02811-007
D-AA	

IDENT CH-SECT-UNIT-FIG	PART NUMBER
D-AA	
33-10-20 04	E1250-003
D-AB	
33-10-20 04	E1250-003
D-AP	
33-40-15 02	BYW54
33-40-15 02	1N4005
33-40-15 02	25-7NF1815-5A
D-CC	
28-40-30 05	9-328-26-002
D-DAB	
30-40-20 03	MR5-680RPM1PCT
30-40-20 05	MR5-680RPM1PCT
30-40-20 03	M05-680R
30-40-20 05	M05-680R
30-40-20 03	TR5-680R
30-40-20 05	TR5-680R
30-40-20 03	2TL1-7
30-40-20 05	2TL1-7
D-DAG	
30-40-15 07	652-1
30-40-15 12	652-2W
D-DAG	
30-40-15 10	652-2W
30-40-15 11	652-2W
D-DAG	
30-40-15 07	652-2W
D-DE	
49-60-10 05	2TL1-51
D-DR	
30-30-20 02	80-10-1351
D-GA	
24-30-20 02	A703FSS
24-30-20 03	A703FSS
49-60-10 05	A703FSS
49-60-30 06	A703FSS
49-60-30 08	A703FSS
49-60-30 09	A703FSS
49-60-30 11	A703FSS
80-10-10 04	A703FSS
D-GG	
21-60-10 08	HWBUN1146D10B
21-60-10 10	HWBUN1146D10B
21-60-10 11	HWBUN1146D10B
26-10-30 03	HWBUN1146D10B
D-KL	
28-41-10 02	HTE9044-001
28-41-10 03	HTE9044-001
28-41-10 03	PVW6G12-10SNS03
28-41-10 02	PVW612-10SNS03
D-PQ	

IDENT CH-SECT-UNIT-FIG	PART NUMBER
D-PQ	
28-40-10 04	0107KPU1
28-40-10 05	0107KPU1
D-QK	
77-40-10 02	HWBUN1736S10B
D-S-DAE	
33-10-20 04	BDX67A
33-10-20 07	BDX67A
33-10-20 08	BDX67A
33-10-20 04	25-8NF405-503A
33-10-20 07	25-8NF405-503A
D-T-DAE	
33-10-05 05	BDX67A
33-10-05 07	BDX67A
33-10-05 08	BDX67A
33-10-05 09	BDX67A
33-10-05 11	BDX67A
33-10-05 05	25-8NF407-503A
33-10-05 07	25-8NF407-503A
33-10-05 08	25-8NF407-503A
33-10-05 11	25-8NF407-503A
D-UC	
31-50-05 03	JS151
31-50-05 03	1HM1
D-V-DAE	
33-10-05 05	BDX67A
33-10-05 07	BDX67A
33-10-05 08	BDX67A
33-10-05 09	BDX67A
33-10-05 11	BDX67A
33-10-05 05	25-8NF399-503A
33-10-05 07	25-8NF399-503A
33-10-05 08	25-8NF399-503A
33-10-05 11	25-8NF399-503A
D-WX	
31-50-05 03	B375-01
31-50-05 03	99-923
D-XZ	
24-50-05 08	S6GN55
24-50-05 11	S6GN55
24-50-05 14	S6GN55
24-50-05 15	S6GN55
24-50-05 08	25-8NF2371-31A
24-50-05 11	25-8NF2371-31A
24-50-05 14	25-8NF2371-31A
24-50-05 15	25-8NF2371-31A
D-Y-DAE	
33-10-20 04	BDX66A
33-10-20 07	BDX66A
33-10-20 08	BDX66A
33-10-20 04	25-8NF397-503A

IDENT CH-SECT-UNIT-FIG	PART NUMBER
D-Y-DAE	
33-10-20 07	25-8NF397-503A
D-Z-DAE	
31-50-01 04	MJE2955
31-50-01 07	MJE2955
31-50-01 08	MJE2955
31-50-01 09	MJE2955
31-50-01 14	MJE2955
D-ZJ	
31-50-05 03	M12883-40-19
31-50-05 03	M400-1265
D-ZL	
24-50-01 05	BAEREF000003234
24-50-01 06	BAEREF000003234
24-50-01 07	BAEREF000003234
24-50-01 05	SW06HHN400SUU9* 096
24-50-01 06	SW06HHN400SUU9* 096
24-50-01 07	SW06HHN400SUU9* 096
D-ZT	
21-60-10 11	M12883-41-16
21-60-10 11	M300-1264
D-ZZ	
49-60-10 05	HWBUN1146D10S
DA-CC	
31-50-01 04	C9032-001B
31-50-01 07	C9032-001B
31-50-01 08	C9032-001B
31-50-01 09	C9032-001B
31-50-01 14	C9032-001B
DA-DAB	
33-10-05 05	M12883-40-19
33-10-05 07	M12883-40-19
33-10-05 08	M12883-40-19
33-10-05 09	M12883-40-19
33-10-05 11	M12883-40-19
33-10-20 04	M12883-40-19
33-10-20 07	M12883-40-19
33-10-20 08	M12883-40-19
33-10-05 05	M400-1265
33-10-05 07	M400-1265
33-10-05 08	M400-1265
33-10-05 09	M400-1265
33-10-05 11	M400-1265
33-10-20 04	M400-1265
33-10-20 07	M400-1265
33-10-20 08	M400-1265
DA-GG	
24-50-01 05	CV7313

IDENT CH-SECT-UNIT-FIG	PART NUMBER
DA-GG	
24-50-01 06	CV7313
24-50-01 07	CV7313
DA-P	
30-80-10 03	CD16139-2A0
DA1-P	
27-33-00 05	MTC100KTI-1102
27-33-00 07	MTC100KTI-1102
30-30-20 02	MTC100KTI-1102
24-30-10 02	MTC100KT1-1101
24-50-01 05	MTC100KT1-1101
24-50-01 06	MTC100KT1-1101
24-50-01 07	MTC100KT1-1101
27-33-00 05	MTC100KT1-1101
27-33-00 07	MTC100KT1-1101
28-21-05 02	MTC100KT1-1101
28-21-05 03	MTC100KT1-1101
28-21-05 04	MTC100KT1-1101
30-30-20 02	MTC100KT1-1101
30-80-10 02	MTC100KT1-1101
30-80-10 03	MTC100KT1-1101
33-10-05 05	MTC100KT1-1101
33-10-05 07	MTC100KT1-1101
33-10-05 08	MTC100KT1-1101
33-10-05 09	MTC100KT1-1101
33-10-05 11	MTC100KT1-1101
73-20-10 03	MTC100KT1-1101
24-30-10 02	MTC100KT1-1102
24-50-01 05	MTC100KT1-1102
24-50-01 06	MTC100KT1-1102
24-50-01 07	MTC100KT1-1102
28-21-05 02	MTC100KT1-1102
28-21-05 03	MTC100KT1-1102
28-21-05 04	MTC100KT1-1102
30-80-10 02	MTC100KT1-1102
30-80-10 03	MTC100KT1-1102
33-10-05 05	MTC100KT1-1102
33-10-05 07	MTC100KT1-1102
33-10-05 08	MTC100KT1-1102
33-10-05 09	MTC100KT1-1102
33-10-05 11	MTC100KT1-1102
73-20-10 03	MTC100KT1-1102
24-30-10 02	MTC100YH1-003
24-50-01 05	MTC100YH1-003
24-50-01 06	MTC100YH1-003
24-50-01 07	MTC100YH1-003
27-33-00 05	MTC100YH1-003
27-33-00 07	MTC100YH1-003
28-21-05 02	MTC100YH1-003
28-21-05 03	MTC100YH1-003
28-21-05 04	MTC100YH1-003

IDENT CH-SECT-UNIT-FIG	PART NUMBER
DA1-P	
30-30-20 02	MTC100YH1-003
30-80-10 02	MTC100YH1-003
30-80-10 03	MTC100YH1-003
33-10-05 05	MTC100YH1-003
33-10-05 07	MTC100YH1-003
33-10-05 08	MTC100YH1-003
33-10-05 09	MTC100YH1-003
33-10-05 11	MTC100YH1-003
73-20-10 03	MTC100YH1-003
DA1-P	
24-30-10 02	MTC100YC1-005
24-50-01 06	MTC100YC1-005
24-50-01 07	MTC100YC1-005
27-33-00 07	MTC100YC1-005
28-21-05 04	MTC100YC1-005
30-30-20 02	MTC100YC1-005
30-80-10 03	MTC100YC1-005
33-10-05 09	MTC100YC1-005
33-10-05 11	MTC100YC1-005
73-20-10 03	MTC100YC1-005
24-30-10 02	MTC100YH1-003
24-50-01 06	MTC100YH1-003
24-50-01 07	MTC100YH1-003
27-33-00 07	MTC100YH1-003
28-21-05 04	MTC100YH1-003
30-30-20 02	MTC100YH1-003
30-80-10 03	MTC100YH1-003
33-10-05 09	MTC100YH1-003
33-10-05 11	MTC100YH1-003
73-20-10 03	MTC100YH1-003
DA1-R	
24-30-10 02	MTC100KT1-1103
24-50-01 05	MTC100KT1-1103
24-50-01 06	MTC100KT1-1103
24-50-01 07	MTC100KT1-1103
27-33-00 05	MTC100KT1-1103
27-33-00 07	MTC100KT1-1103
28-21-05 02	MTC100KT1-1103
28-21-05 03	MTC100KT1-1103
28-21-05 04	MTC100KT1-1103
30-30-20 02	MTC100KT1-1103
30-80-10 02	MTC100KT1-1103
30-80-10 03	MTC100KT1-1103
33-10-05 05	MTC100KT1-1103
33-10-05 07	MTC100KT1-1103
33-10-05 08	MTC100KT1-1103
33-10-05 09	MTC100KT1-1103
33-10-05 11	MTC100KT1-1103
73-20-10 03	MTC100KT1-1103
24-30-10 02	MTC100KT1-1104

IDENT CH-SECT-UNIT-FIG	PART NUMBER
DA1-R	
24-50-01 05	MTC100KT1-1104
24-50-01 06	MTC100KT1-1104
24-50-01 07	MTC100KT1-1104
27-33-00 05	MTC100KT1-1104
27-33-00 07	MTC100KT1-1104
28-21-05 02	MTC100KT1-1104
28-21-05 03	MTC100KT1-1104
28-21-05 04	MTC100KT1-1104
30-30-20 02	MTC100KT1-1104
30-80-10 02	MTC100KT1-1104
30-80-10 03	MTC100KT1-1104
33-10-05 05	MTC100KT1-1104
33-10-05 07	MTC100KT1-1104
33-10-05 08	MTC100KT1-1104
33-10-05 09	MTC100KT1-1104
33-10-05 11	MTC100KT1-1104
73-20-10 03	MTC100KT1-1104
24-30-10 02	MTC100YH1-004
24-50-01 05	MTC100YH1-004
24-50-01 06	MTC100YH1-004
24-50-01 07	MTC100YH1-004
27-33-00 05	MTC100YH1-004
27-33-00 07	MTC100YH1-004
28-21-05 02	MTC100YH1-004
28-21-05 03	MTC100YH1-004
28-21-05 04	MTC100YH1-004
30-30-20 02	MTC100YH1-004
30-80-10 02	MTC100YH1-004
30-80-10 03	MTC100YH1-004
33-10-05 05	MTC100YH1-004
33-10-05 07	MTC100YH1-004
33-10-05 08	MTC100YH1-004
33-10-05 09	MTC100YH1-004
33-10-05 11	MTC100YH1-004
73-20-10 03	MTC100YH1-004
DA1-R	
24-30-10 02	MTC100YC1-006
24-50-01 06	MTC100YC1-006
24-50-01 07	MTC100YC1-006
27-33-00 07	MTC100YC1-006
28-21-05 04	MTC100YC1-006
30-30-20 02	MTC100YC1-006
30-80-10 03	MTC100YC1-006
33-10-05 09	MTC100YC1-006
33-10-05 11	MTC100YC1-006
73-20-10 03	MTC100YC1-006
24-30-10 02	MTC100YH1-004
24-50-01 06	MTC100YH1-004
24-50-01 07	MTC100YH1-004
27-33-00 07	MTC100YH1-004

IDENT CH-SECT-UNIT-FIG	PART NUMBER
DA1-R	
28-21-05 04	MTC100YH1-004
30-30-20 02	MTC100YH1-004
30-80-10 03	MTC100YH1-004
33-10-05 09	MTC100YH1-004
33-10-05 11	MTC100YH1-004
73-20-10 03	MTC100YH1-004
DA10-P	
30-40-15 07	MTCR161-04P
30-40-15 10	MTCR161-04P
30-40-15 11	MTCR161-04P
30-40-15 12	MTCR161-04P
DA10-R	
30-40-15 07	MTCR101-04S
30-40-15 10	MTCR101-04S
30-40-15 11	MTCR101-04S
30-40-15 12	MTCR101-04S
DA11-P	
30-40-15 07	MTCR161-04P
30-40-15 10	MTCR161-04P
30-40-15 11	MTCR161-04P
30-40-15 12	MTCR161-04P
DA11-R	
30-40-15 07	MTCR101-04S
30-40-15 10	MTCR101-04S
30-40-15 11	MTCR101-04S
30-40-15 12	MTCR101-04S
DA12-P	
24-21-17 03	MTCR161-04P
24-21-17 04	MTCR161-04P
30-40-20 03	MTCR161-04P
30-40-20 05	MTCR161-04P
DA12-R	
24-21-17 03	MTCR101-04S
24-21-17 04	MTCR101-04S
30-40-20 03	MTCR101-04S
30-40-20 05	MTCR101-04S
DA13-P	
30-40-20 03	MTCR161-04P
30-40-20 05	MTCR161-04P
DA13-R	
30-40-20 03	MTCR101-04S
30-40-20 05	MTCR101-04S
DA14-P	
31-20-60 02	MTC100KTI-1102
73-20-01 05	MTC100KTI-1102
24-21-17 03	MTC100KT1-1101
24-21-17 04	MTC100KT1-1101
24-30-10 02	MTC100KT1-1101
24-50-01 05	MTC100KT1-1101
24-50-01 06	MTC100KT1-1101

IDENT CH-SECT-UNIT-FIG	PART NUMBER
DA14-P	
24-50-01 07	MTC100KT1-1101
28-40-20 02	MTC100KT1-1101
28-40-40 02	MTC100KT1-1101
30-20-10 02	MTC100KT1-1101
31-20-60 02	MTC100KT1-1101
31-50-01 04	MTC100KT1-1101
31-50-01 07	MTC100KT1-1101
31-50-01 08	MTC100KT1-1101
31-50-01 09	MTC100KT1-1101
31-50-01 14	MTC100KT1-1101
73-20-01 05	MTC100KT1-1101
79-30-10 02	MTC100KT1-1101
24-21-17 03	MTC100KT1-1102
24-21-17 04	MTC100KT1-1102
24-30-10 02	MTC100KT1-1102
24-50-01 05	MTC100KT1-1102
24-50-01 06	MTC100KT1-1102
24-50-01 07	MTC100KT1-1102
28-40-20 02	MTC100KT1-1102
28-40-40 02	MTC100KT1-1102
30-20-10 02	MTC100KT1-1102
31-50-01 04	MTC100KT1-1102
31-50-01 07	MTC100KT1-1102
31-50-01 08	MTC100KT1-1102
31-50-01 09	MTC100KT1-1102
31-50-01 14	MTC100KT1-1102
79-30-10 02	MTC100KT1-1102
29-32-10 05	MTC100KT1-1103
29-32-10 05	MTC100KT1-1104
24-21-17 03	MTC100YH1-003
24-21-17 04	MTC100YH1-003
24-30-10 02	MTC100YH1-003
24-50-01 05	MTC100YH1-003
24-50-01 06	MTC100YH1-003
24-50-01 07	MTC100YH1-003
28-40-20 02	MTC100YH1-003
28-40-40 02	MTC100YH1-003
29-32-10 05	MTC100YH1-003
30-20-10 02	MTC100YH1-003
31-20-60 02	MTC100YH1-003
31-50-01 04	MTC100YH1-003
31-50-01 07	MTC100YH1-003
31-50-01 08	MTC100YH1-003
31-50-01 09	MTC100YH1-003
31-50-01 14	MTC100YH1-003
73-20-01 05	MTC100YH1-003
79-30-10 02	MTC100YH1-003
DA14-P	
24-21-17 04	MTC100YC1-005
24-30-10 02	MTC100YC1-005

IDENT CH-SECT-UNIT-FIG	PART NUMBER
DA14-P	
24-50-01 06	MTC100YC1-005
24-50-01 07	MTC100YC1-005
28-40-20 02	MTC100YC1-005
28-40-40 02	MTC100YC1-005
30-20-10 02	MTC100YC1-005
31-20-60 02	MTC100YC1-005
31-50-01 09	MTC100YC1-005
31-50-01 14	MTC100YC1-005
73-20-01 05	MTC100YC1-005
79-30-10 02	MTC100YC1-005
29-32-10 05	MTC100YC1-006
24-21-17 04	MTC100YH1-003
24-30-10 02	MTC100YH1-003
24-50-01 06	MTC100YH1-003
24-50-01 07	MTC100YH1-003
28-40-20 02	MTC100YH1-003
28-40-40 02	MTC100YH1-003
29-32-10 05	MTC100YH1-003
30-20-10 02	MTC100YH1-003
31-20-60 02	MTC100YH1-003
31-50-01 09	MTC100YH1-003
31-50-01 14	MTC100YH1-003
73-20-01 05	MTC100YH1-003
79-30-10 02	MTC100YH1-003
DA14-R	
29-32-10 05	MTC100KTI-1102
73-20-01 05	MTC100KTI-1104
29-32-10 05	MTC100KT1-1101
24-21-17 03	MTC100KT1-1103
24-21-17 04	MTC100KT1-1103
24-30-10 02	MTC100KT1-1103
24-50-01 05	MTC100KT1-1103
24-50-01 06	MTC100KT1-1103
24-50-01 07	MTC100KT1-1103
28-40-20 02	MTC100KT1-1103
28-40-40 02	MTC100KT1-1103
30-20-10 02	MTC100KT1-1103
31-20-60 02	MTC100KT1-1103
31-50-01 04	MTC100KT1-1103
31-50-01 07	MTC100KT1-1103
31-50-01 08	MTC100KT1-1103
31-50-01 09	MTC100KT1-1103
31-50-01 14	MTC100KT1-1103
73-20-01 05	MTC100KT1-1103
79-30-10 02	MTC100KT1-1103
24-21-17 03	MTC100KT1-1104
24-21-17 04	MTC100KT1-1104
24-30-10 02	MTC100KT1-1104
24-50-01 05	MTC100KT1-1104
24-50-01 06	MTC100KT1-1104

IDENT CH-SECT-UNIT-FIG	PART NUMBER
DA14-R	
24-50-01 07	MTC100KT1-1104
28-40-20 02	MTC100KT1-1104
28-40-40 02	MTC100KT1-1104
30-20-10 02	MTC100KT1-1104
31-20-60 02	MTC100KT1-1104
31-50-01 04	MTC100KT1-1104
31-50-01 07	MTC100KT1-1104
31-50-01 08	MTC100KT1-1104
31-50-01 09	MTC100KT1-1104
31-50-01 14	MTC100KT1-1104
79-30-10 02	MTC100KT1-1104
24-21-17 03	MTC100YH1-004
24-21-17 04	MTC100YH1-004
24-30-10 02	MTC100YH1-004
24-50-01 05	MTC100YH1-004
24-50-01 06	MTC100YH1-004
24-50-01 07	MTC100YH1-004
28-40-20 02	MTC100YH1-004
28-40-40 02	MTC100YH1-004
29-32-10 05	MTC100YH1-004
30-20-10 02	MTC100YH1-004
31-20-60 02	MTC100YH1-004
31-50-01 04	MTC100YH1-004
31-50-01 07	MTC100YH1-004
31-50-01 08	MTC100YH1-004
31-50-01 09	MTC100YH1-004
31-50-01 14	MTC100YH1-004
73-20-01 05	MTC100YH1-004
79-30-10 02	MTC100YH1-004
DA14-R	
29-32-10 05	MTC100YC1-005
24-21-17 04	MTC100YC1-006
24-30-10 02	MTC100YC1-006
24-50-01 06	MTC100YC1-006
24-50-01 07	MTC100YC1-006
28-40-20 02	MTC100YC1-006
28-40-40 02	MTC100YC1-006
30-20-10 02	MTC100YC1-006
31-20-60 02	MTC100YC1-006
31-50-01 09	MTC100YC1-006
31-50-01 14	MTC100YC1-006
73-20-01 05	MTC100YC1-006
79-30-10 02	MTC100YC1-006
24-21-17 04	MTC100YH1-004
24-30-10 02	MTC100YH1-004
24-50-01 06	MTC100YH1-004
24-50-01 07	MTC100YH1-004
28-40-20 02	MTC100YH1-004
28-40-40 02	MTC100YH1-004
29-32-10 05	MTC100YH1-004

IDENT CH-SECT-UNIT-FIG	PART NUMBER
DA14-R	
30-20-10 02	MTC100YH1-004
31-20-60 02	MTC100YH1-004
31-50-01 09	MTC100YH1-004
31-50-01 14	MTC100YH1-004
73-20-01 05	MTC100YH1-004
79-30-10 02	MTC100YH1-004
DA15-P	
24-21-17 03	MTC100KT1-1101
24-21-17 04	MTC100KT1-1101
24-50-01 05	MTC100KT1-1101
24-50-01 06	MTC100KT1-1101
24-50-01 07	MTC100KT1-1101
26-10-30 03	MTC100KT1-1101
28-40-20 02	MTC100KT1-1101
28-40-40 02	MTC100KT1-1101
30-20-10 02	MTC100KT1-1101
31-50-01 04	MTC100KT1-1101
31-50-01 07	MTC100KT1-1101
31-50-01 08	MTC100KT1-1101
31-50-01 09	MTC100KT1-1101
31-50-01 14	MTC100KT1-1101
79-30-10 02	MTC100KT1-1101
24-21-17 03	MTC100KT1-1102
24-21-17 04	MTC100KT1-1102
24-50-01 05	MTC100KT1-1102
24-50-01 06	MTC100KT1-1102
24-50-01 07	MTC100KT1-1102
26-10-30 03	MTC100KT1-1102
28-40-20 02	MTC100KT1-1102
28-40-40 02	MTC100KT1-1102
30-20-10 02	MTC100KT1-1102
31-50-01 04	MTC100KT1-1102
31-50-01 07	MTC100KT1-1102
31-50-01 08	MTC100KT1-1102
31-50-01 09	MTC100KT1-1102
31-50-01 14	MTC100KT1-1102
79-30-10 02	MTC100KT1-1102
24-21-17 03	MTC100YH1-003
24-21-17 04	MTC100YH1-003
24-50-01 05	MTC100YH1-003
24-50-01 06	MTC100YH1-003
24-50-01 07	MTC100YH1-003
26-10-30 03	MTC100YH1-003
28-40-20 02	MTC100YH1-003
28-40-40 02	MTC100YH1-003
30-20-10 02	MTC100YH1-003
31-50-01 04	MTC100YH1-003
31-50-01 07	MTC100YH1-003
31-50-01 08	MTC100YH1-003
31-50-01 09	MTC100YH1-003

IDENT CH-SECT-UNIT-FIG	PART NUMBER
DA15-P	
31-50-01 14	MTC100YH1-003
79-30-10 02	MTC100YH1-003
DA15-P	
24-21-17 04	MTC100YC1-005
24-50-01 06	MTC100YC1-005
24-50-01 07	MTC100YC1-005
26-10-30 03	MTC100YC1-005
28-40-20 02	MTC100YC1-005
28-40-40 02	MTC100YC1-005
30-20-10 02	MTC100YC1-005
31-50-01 09	MTC100YC1-005
31-50-01 14	MTC100YC1-005
79-30-10 02	MTC100YC1-005
24-21-17 04	MTC100YH1-003
24-50-01 06	MTC100YH1-003
24-50-01 07	MTC100YH1-003
26-10-30 03	MTC100YH1-003
28-40-20 02	MTC100YH1-003
28-40-40 02	MTC100YH1-003
30-20-10 02	MTC100YH1-003
31-50-01 09	MTC100YH1-003
31-50-01 14	MTC100YH1-003
79-30-10 02	MTC100YH1-003
DA15-R	
24-21-17 03	MTC100KT1-1103
24-21-17 04	MTC100KT1-1103
24-50-01 05	MTC100KT1-1103
24-50-01 06	MTC100KT1-1103
24-50-01 07	MTC100KT1-1103
26-10-30 03	MTC100KT1-1103
28-40-20 02	MTC100KT1-1103
28-40-40 02	MTC100KT1-1103
30-20-10 02	MTC100KT1-1103
31-50-01 04	MTC100KT1-1103
31-50-01 07	MTC100KT1-1103
31-50-01 08	MTC100KT1-1103
31-50-01 09	MTC100KT1-1103
31-50-01 14	MTC100KT1-1103
79-30-10 02	MTC100KT1-1103
24-21-17 03	MTC100KT1-1104
24-21-17 04	MTC100KT1-1104
24-50-01 05	MTC100KT1-1104
24-50-01 06	MTC100KT1-1104
24-50-01 07	MTC100KT1-1104
26-10-30 03	MTC100KT1-1104
28-40-20 02	MTC100KT1-1104
28-40-40 02	MTC100KT1-1104
30-20-10 02	MTC100KT1-1104
31-50-01 04	MTC100KT1-1104
31-50-01 07	MTC100KT1-1104

IDENT CH-SECT-UNIT-FIG	PART NUMBER
DA15-R	
31-50-01 08	MTC100KT1-1104
31-50-01 09	MTC100KT1-1104
31-50-01 14	MTC100KT1-1104
79-30-10 02	MTC100KT1-1104
24-21-17 03	MTC100YH1-004
24-21-17 04	MTC100YH1-004
24-50-01 05	MTC100YH1-004
24-50-01 06	MTC100YH1-004
24-50-01 07	MTC100YH1-004
26-10-30 03	MTC100YH1-004
28-40-20 02	MTC100YH1-004
28-40-40 02	MTC100YH1-004
30-20-10 02	MTC100YH1-004
31-50-01 04	MTC100YH1-004
31-50-01 07	MTC100YH1-004
31-50-01 08	MTC100YH1-004
31-50-01 09	MTC100YH1-004
31-50-01 14	MTC100YH1-004
79-30-10 02	MTC100YH1-004
DA15-R	
24-21-17 04	MTC100YC1-006
24-50-01 06	MTC100YC1-006
24-50-01 07	MTC100YC1-006
26-10-30 03	MTC100YC1-006
28-40-20 02	MTC100YC1-006
28-40-40 02	MTC100YC1-006
30-20-10 02	MTC100YC1-006
31-50-01 09	MTC100YC1-006
31-50-01 14	MTC100YC1-006
79-30-10 02	MTC100YC1-006
24-21-17 04	MTC100YH1-004
24-50-01 06	MTC100YH1-004
24-50-01 07	MTC100YH1-004
26-10-30 03	MTC100YH1-004
28-40-20 02	MTC100YH1-004
28-40-40 02	MTC100YH1-004
30-20-10 02	MTC100YH1-004
31-50-01 09	MTC100YH1-004
31-50-01 14	MTC100YH1-004
79-30-10 02	MTC100YH1-004
DA16-P	
27-33-00 05	MTC100KTI-1102
27-33-00 07	MTC100KTI-1102
29-31-10 02	MTC100KTI-1102
26-10-20 02	MTC100KT1-1101
27-24-10 02	MTC100KT1-1101
27-24-10 03	MTC100KT1-1101
27-33-00 05	MTC100KT1-1101
27-33-00 07	MTC100KT1-1101
28-41-10 02	MTC100KT1-1101

IDENT CH-SECT-UNIT-FIG	PART NUMBER
DA16-P	
28-41-10 03	MTC100KT1-1101
28-41-20 03	MTC100KT1-1101
28-42-10 02	MTC100KT1-1101
29-31-10 02	MTC100KT1-1101
30-40-15 07	MTC100KT1-1101
30-40-15 10	MTC100KT1-1101
30-40-15 11	MTC100KT1-1101
30-40-15 12	MTC100KT1-1101
31-50-01 04	MTC100KT1-1101
31-50-01 07	MTC100KT1-1101
31-50-01 08	MTC100KT1-1101
31-50-01 09	MTC100KT1-1101
31-50-01 14	MTC100KT1-1101
49-60-30 06	MTC100KT1-1101
49-60-30 08	MTC100KT1-1101
49-60-30 09	MTC100KT1-1101
49-60-30 11	MTC100KT1-1101
52-70-10 02	MTC100KT1-1101
26-10-20 02	MTC100KT1-1102
27-24-10 02	MTC100KT1-1102
27-24-10 03	MTC100KT1-1102
28-41-10 02	MTC100KT1-1102
28-41-10 03	MTC100KT1-1102
28-41-20 03	MTC100KT1-1102
28-42-10 02	MTC100KT1-1102
30-40-15 07	MTC100KT1-1102
30-40-15 10	MTC100KT1-1102
30-40-15 11	MTC100KT1-1102
30-40-15 12	MTC100KT1-1102
31-50-01 04	MTC100KT1-1102
31-50-01 07	MTC100KT1-1102
31-50-01 08	MTC100KT1-1102
31-50-01 09	MTC100KT1-1102
31-50-01 14	MTC100KT1-1102
49-60-30 06	MTC100KT1-1102
49-60-30 08	MTC100KT1-1102
49-60-30 09	MTC100KT1-1102
49-60-30 11	MTC100KT1-1102
52-70-10 02	MTC100KT1-1102
27-00-10 03	MTC100KT2-1101
27-00-10 04	MTC100KT2-1101
27-00-10 03	MTC100KT2-1102
27-00-10 04	MTC100KT2-1102
26-10-20 02	MTC100YH1-003
27-00-10 03	MTC100YH1-003
27-00-10 04	MTC100YH1-003
27-24-10 02	MTC100YH1-003
27-24-10 03	MTC100YH1-003
27-33-00 05	MTC100YH1-003
27-33-00 07	MTC100YH1-003

IDENT CH-SECT-UNIT-FIG	PART NUMBER
DA16-P	
28-41-10 02	MTC100YH1-003
28-41-10 03	MTC100YH1-003
28-41-20 03	MTC100YH1-003
28-42-10 02	MTC100YH1-003
29-31-10 02	MTC100YH1-003
30-40-15 07	MTC100YH1-003
30-40-15 10	MTC100YH1-003
30-40-15 11	MTC100YH1-003
30-40-15 12	MTC100YH1-003
31-50-01 04	MTC100YH1-003
31-50-01 07	MTC100YH1-003
31-50-01 08	MTC100YH1-003
31-50-01 09	MTC100YH1-003
31-50-01 14	MTC100YH1-003
49-60-30 06	MTC100YH1-003
49-60-30 08	MTC100YH1-003
49-60-30 09	MTC100YH1-003
49-60-30 11	MTC100YH1-003
52-70-10 02	MTC100YH1-003
DA16-P	
26-10-20 02	MTC100YC1-005
27-00-10 04	MTC100YC1-005
27-24-10 03	MTC100YC1-005
27-33-00 07	MTC100YC1-005
28-41-10 02	MTC100YC1-005
28-41-20 03	MTC100YC1-005
28-42-10 02	MTC100YC1-005
29-31-10 02	MTC100YC1-005
30-40-15 11	MTC100YC1-005
30-40-15 12	MTC100YC1-005
31-50-01 09	MTC100YC1-005
31-50-01 14	MTC100YC1-005
49-60-30 08	MTC100YC1-005
52-70-10 02	MTC100YC1-005
26-10-20 02	MTC100YH1-003
27-00-10 04	MTC100YH1-003
27-24-10 03	MTC100YH1-003
27-33-00 07	MTC100YH1-003
28-41-10 02	MTC100YH1-003
28-41-20 03	MTC100YH1-003
28-42-10 02	MTC100YH1-003
29-31-10 02	MTC100YH1-003
30-40-15 11	MTC100YH1-003
30-40-15 12	MTC100YH1-003
31-50-01 09	MTC100YH1-003
31-50-01 14	MTC100YH1-003
49-60-30 08	MTC100YH1-003
52-70-10 02	MTC100YH1-003
DA16-R	
26-10-20 02	MTC100KT1-1103

IDENT CH-SECT-UNIT-FIG	PART NUMBER
DA16-R	
27-00-10 03	MTC100KT1-1103
27-00-10 04	MTC100KT1-1103
27-24-10 02	MTC100KT1-1103
27-24-10 03	MTC100KT1-1103
27-33-00 05	MTC100KT1-1103
27-33-00 07	MTC100KT1-1103
28-41-10 02	MTC100KT1-1103
28-41-10 03	MTC100KT1-1103
28-41-20 03	MTC100KT1-1103
28-42-10 02	MTC100KT1-1103
29-31-10 02	MTC100KT1-1103
30-40-15 07	MTC100KT1-1103
30-40-15 10	MTC100KT1-1103
30-40-15 11	MTC100KT1-1103
30-40-15 12	MTC100KT1-1103
31-50-01 04	MTC100KT1-1103
31-50-01 07	MTC100KT1-1103
31-50-01 08	MTC100KT1-1103
31-50-01 09	MTC100KT1-1103
31-50-01 14	MTC100KT1-1103
49-60-30 06	MTC100KT1-1103
49-60-30 08	MTC100KT1-1103
49-60-30 09	MTC100KT1-1103
49-60-30 11	MTC100KT1-1103
52-70-10 02	MTC100KT1-1103
26-10-20 02	MTC100KT1-1104
27-00-10 03	MTC100KT1-1104
27-00-10 04	MTC100KT1-1104
27-24-10 02	MTC100KT1-1104
27-24-10 03	MTC100KT1-1104
27-33-00 05	MTC100KT1-1104
27-33-00 07	MTC100KT1-1104
28-41-10 02	MTC100KT1-1104
28-41-10 03	MTC100KT1-1104
28-41-20 03	MTC100KT1-1104
28-42-10 02	MTC100KT1-1104
29-31-10 02	MTC100KT1-1104
30-40-15 07	MTC100KT1-1104
30-40-15 10	MTC100KT1-1104
30-40-15 11	MTC100KT1-1104
30-40-15 12	MTC100KT1-1104
31-50-01 04	MTC100KT1-1104
31-50-01 07	MTC100KT1-1104
31-50-01 08	MTC100KT1-1104
31-50-01 09	MTC100KT1-1104
31-50-01 14	MTC100KT1-1104
49-60-30 06	MTC100KT1-1104
49-60-30 08	MTC100KT1-1104
49-60-30 09	MTC100KT1-1104
49-60-30 11	MTC100KT1-1104

IDENT CH-SECT-UNIT-FIG	PART NUMBER
DA16-R	
52-70-10 02	MTC100KT1-1104
26-10-20 02	MTC100YH1-004
27-00-10 03	MTC100YH1-004
27-00-10 04	MTC100YH1-004
27-24-10 02	MTC100YH1-004
27-24-10 03	MTC100YH1-004
27-33-00 05	MTC100YH1-004
27-33-00 07	MTC100YH1-004
28-41-10 02	MTC100YH1-004
28-41-10 03	MTC100YH1-004
28-41-20 03	MTC100YH1-004
28-42-10 02	MTC100YH1-004
29-31-10 02	MTC100YH1-004
30-40-15 07	MTC100YH1-004
30-40-15 10	MTC100YH1-004
30-40-15 11	MTC100YH1-004
30-40-15 12	MTC100YH1-004
31-50-01 04	MTC100YH1-004
31-50-01 07	MTC100YH1-004
31-50-01 08	MTC100YH1-004
31-50-01 09	MTC100YH1-004
31-50-01 14	MTC100YH1-004
49-60-30 06	MTC100YH1-004
49-60-30 08	MTC100YH1-004
49-60-30 09	MTC100YH1-004
49-60-30 11	MTC100YH1-004
52-70-10 02	MTC100YH1-004
DA16-R	
26-10-20 02	MTC100YC1-006
27-00-10 04	MTC100YC1-006
27-24-10 03	MTC100YC1-006
27-33-00 07	MTC100YC1-006
28-41-10 02	MTC100YC1-006
28-41-20 03	MTC100YC1-006
28-42-10 02	MTC100YC1-006
29-31-10 02	MTC100YC1-006
30-40-15 11	MTC100YC1-006
30-40-15 12	MTC100YC1-006
31-50-01 09	MTC100YC1-006
31-50-01 14	MTC100YC1-006
49-60-30 08	MTC100YC1-006
52-70-10 02	MTC100YC1-006
26-10-20 02	MTC100YH1-004
27-00-10 04	MTC100YH1-004
27-24-10 03	MTC100YH1-004
27-33-00 07	MTC100YH1-004
28-41-10 02	MTC100YH1-004
28-41-20 03	MTC100YH1-004
28-42-10 02	MTC100YH1-004
29-31-10 02	MTC100YH1-004

IDENT CH-SECT-UNIT-FIG	PART NUMBER
DA16-R	
30-40-15 11	MTC100YH1-004
30-40-15 12	MTC100YH1-004
31-50-01 09	MTC100YH1-004
31-50-01 14	MTC100YH1-004
49-60-30 08	MTC100YH1-004
52-70-10 02	MTC100YH1-004
DA17-P	
26-10-30 03	MTCX1X100-100
31-50-01 04	MTCX1X100-100
31-50-01 07	MTCX1X100-100
31-50-01 08	MTCX1X100-100
31-50-01 09	MTCX1X100-100
31-50-01 14	MTCX1X100-100
31-50-05 03	MTCX1X100-100
26-10-30 03	MTC100KT1-1101
31-50-01 04	MTC100KT1-1101
31-50-01 07	MTC100KT1-1101
31-50-01 08	MTC100KT1-1101
31-50-01 09	MTC100KT1-1101
31-50-01 14	MTC100KT1-1101
31-50-05 03	MTC100KT1-1101
26-10-30 03	MTC100YH1-003
31-50-01 04	MTC100YH1-003
31-50-01 07	MTC100YH1-003
31-50-01 08	MTC100YH1-003
31-50-01 09	MTC100YH1-003
31-50-01 14	MTC100YH1-003
31-50-05 03	MTC100YH1-003
DA17-P	
26-10-30 03	MTC100YC1-005
31-50-01 09	MTC100YC1-005
31-50-01 14	MTC100YC1-005
26-10-30 03	MTC100YH1-003
31-50-01 09	MTC100YH1-003
31-50-01 14	MTC100YH1-003
DA17-R	
26-10-30 03	MTCX1X100-100
31-50-01 04	MTCX1X100-100
31-50-01 07	MTCX1X100-100
31-50-01 08	MTCX1X100-100
31-50-01 09	MTCX1X100-100
31-50-01 14	MTCX1X100-100
31-50-05 03	MTCX1X100-100
26-10-30 03	MTC100KT1-1103
31-50-01 04	MTC100KT1-1103
31-50-01 07	MTC100KT1-1103
31-50-01 08	MTC100KT1-1103
31-50-01 09	MTC100KT1-1103
31-50-01 14	MTC100KT1-1103
31-50-05 03	MTC100KT1-1103

IDENT CH-SECT-UNIT-FIG	PART NUMBER
DA17-R	
26-10-30 03	MTC100YH1-004
31-50-01 04	MTC100YH1-004
31-50-01 07	MTC100YH1-004
31-50-01 08	MTC100YH1-004
31-50-01 09	MTC100YH1-004
31-50-01 14	MTC100YH1-004
31-50-05 03	MTC100YH1-004
DA17-R	
26-10-30 03	MTC100YC1-006
31-50-01 09	MTC100YC1-006
31-50-01 14	MTC100YC1-006
26-10-30 03	MTC100YH1-004
31-50-01 09	MTC100YH1-004
31-50-01 14	MTC100YH1-004
DA18-P	
24-30-20 02	MTCX1X100-100
24-30-20 03	MTCX1X100-100
26-10-30 03	MTCX1X100-100
31-50-01 04	MTCX1X100-100
31-50-01 07	MTCX1X100-100
31-50-01 08	MTCX1X100-100
31-50-01 09	MTCX1X100-100
31-50-01 14	MTCX1X100-100
73-20-02 05	MTCX1X100-100
24-30-20 02	MTC100KT1-1101
24-30-20 03	MTC100KT1-1101
26-10-30 03	MTC100KT1-1101
31-50-01 04	MTC100KT1-1101
31-50-01 07	MTC100KT1-1101
31-50-01 08	MTC100KT1-1101
31-50-01 09	MTC100KT1-1101
31-50-01 14	MTC100KT1-1101
73-20-02 05	MTC100KT1-1101
24-30-20 02	MTC100YH1-003
24-30-20 03	MTC100YH1-003
26-10-30 03	MTC100YH1-003
31-50-01 04	MTC100YH1-003
31-50-01 07	MTC100YH1-003
31-50-01 08	MTC100YH1-003
31-50-01 09	MTC100YH1-003
31-50-01 14	MTC100YH1-003
73-20-02 05	MTC100YH1-003
DA18-P	
24-30-20 02	MTC100YC1-005
24-30-20 03	MTC100YC1-005
26-10-30 03	MTC100YC1-005
31-50-01 09	MTC100YC1-005
31-50-01 14	MTC100YC1-005
73-20-02 05	MTC100YC1-005
24-30-20 02	MTC100YH1-003

IDENT CH-SECT-UNIT-FIG	PART NUMBER
DA18-P	
24-30-20 03	MTC100YH1-003
26-10-30 03	MTC100YH1-003
31-50-01 09	MTC100YH1-003
31-50-01 14	MTC100YH1-003
73-20-02 05	MTC100YH1-003
DA18-R	
24-30-20 02	MTCX1X100-100
24-30-20 03	MTCX1X100-100
26-10-30 03	MTCX1X100-100
31-50-01 04	MTCX1X100-100
31-50-01 07	MTCX1X100-100
31-50-01 08	MTCX1X100-100
31-50-01 09	MTCX1X100-100
31-50-01 14	MTCX1X100-100
73-20-02 05	MTCX1X100-100
24-30-20 02	MTC100KT1-1103
24-30-20 03	MTC100KT1-1103
26-10-30 03	MTC100KT1-1103
31-50-01 04	MTC100KT1-1103
31-50-01 07	MTC100KT1-1103
31-50-01 08	MTC100KT1-1103
31-50-01 09	MTC100KT1-1103
31-50-01 14	MTC100KT1-1103
73-20-02 05	MTC100KT1-1103
24-30-20 02	MTC100YH1-004
24-30-20 03	MTC100YH1-004
26-10-30 03	MTC100YH1-004
31-50-01 04	MTC100YH1-004
31-50-01 07	MTC100YH1-004
31-50-01 08	MTC100YH1-004
31-50-01 09	MTC100YH1-004
31-50-01 14	MTC100YH1-004
73-20-02 05	MTC100YH1-004
DA18-R	
24-30-20 02	MTC100YC1-006
24-30-20 03	MTC100YC1-006
26-10-30 03	MTC100YC1-006
31-50-01 09	MTC100YC1-006
31-50-01 14	MTC100YC1-006
73-20-02 05	MTC100YC1-006
24-30-20 02	MTC100YH1-004
24-30-20 03	MTC100YH1-004
26-10-30 03	MTC100YH1-004
31-50-01 09	MTC100YH1-004
31-50-01 14	MTC100YH1-004
73-20-02 05	MTC100YH1-004
DA19-P	
28-21-05 03	MTC100KT1-1101
28-21-05 03	MTC100KT1-1102
21-60-10 08	MTC100KT2-1101

IDENT CH-SECT-UNIT-FIG	PART NUMBER
DA19-P	
21-60-10 10	MTC100KT2-1101
21-60-10 11	MTC100KT2-1101
21-60-20 02	MTC100KT2-1101
21-60-20 03	MTC100KT2-1101
24-50-01 05	MTC100KT2-1101
24-50-01 06	MTC100KT2-1101
24-50-01 07	MTC100KT2-1101
26-10-10 03	MTC100KT2-1101
26-20-10 03	MTC100KT2-1101
27-24-10 02	MTC100KT2-1101
27-24-10 03	MTC100KT2-1101
27-61-20 04	MTC100KT2-1101
28-21-05 02	MTC100KT2-1101
28-21-05 04	MTC100KT2-1101
30-20-10 02	MTC100KT2-1101
30-40-15 07	MTC100KT2-1101
30-40-15 10	MTC100KT2-1101
30-40-15 11	MTC100KT2-1101
30-40-15 12	MTC100KT2-1101
30-40-20 03	MTC100KT2-1101
30-40-20 05	MTC100KT2-1101
33-10-05 05	MTC100KT2-1101
33-10-05 07	MTC100KT2-1101
33-10-05 08	MTC100KT2-1101
33-10-05 09	MTC100KT2-1101
33-10-05 11	MTC100KT2-1101
33-40-20 04	MTC100KT2-1101
34-13-01 04	MTC100KT2-1101
34-13-01 08	MTC100KT2-1101
21-60-10 08	MTC100KT2-1102
21-60-10 10	MTC100KT2-1102
21-60-10 11	MTC100KT2-1102
21-60-20 02	MTC100KT2-1102
21-60-20 03	MTC100KT2-1102
24-50-01 05	MTC100KT2-1102
24-50-01 06	MTC100KT2-1102
24-50-01 07	MTC100KT2-1102
26-10-10 03	MTC100KT2-1102
26-20-10 03	MTC100KT2-1102
27-24-10 02	MTC100KT2-1102
27-24-10 03	MTC100KT2-1102
27-61-20 04	MTC100KT2-1102
28-21-05 02	MTC100KT2-1102
28-21-05 04	MTC100KT2-1102
30-20-10 02	MTC100KT2-1102
30-40-15 07	MTC100KT2-1102
30-40-15 10	MTC100KT2-1102
30-40-15 11	MTC100KT2-1102
30-40-15 12	MTC100KT2-1102
30-40-20 03	MTC100KT2-1102

IDENT CH-SECT-UNIT-FIG	PART NUMBER
DA19-P	
30-40-20 05	MTC100KT2-1102
33-10-05 05	MTC100KT2-1102
33-10-05 07	MTC100KT2-1102
33-10-05 08	MTC100KT2-1102
33-10-05 09	MTC100KT2-1102
33-10-05 11	MTC100KT2-1102
33-40-20 04	MTC100KT2-1102
34-13-01 04	MTC100KT2-1102
34-13-01 08	MTC100KT2-1102
28-21-05 03	MTC100YH1-003
21-60-10 08	MTC100YH2-009
21-60-10 10	MTC100YH2-009
21-60-10 11	MTC100YH2-009
21-60-20 02	MTC100YH2-009
21-60-20 03	MTC100YH2-009
24-50-01 05	MTC100YH2-009
24-50-01 06	MTC100YH2-009
24-50-01 07	MTC100YH2-009
26-10-10 03	MTC100YH2-009
26-20-10 03	MTC100YH2-009
27-24-10 02	MTC100YH2-009
27-24-10 03	MTC100YH2-009
27-61-20 04	MTC100YH2-009
28-21-05 02	MTC100YH2-009
28-21-05 04	MTC100YH2-009
30-20-10 02	MTC100YH2-009
30-40-15 07	MTC100YH2-009
30-40-15 10	MTC100YH2-009
30-40-15 11	MTC100YH2-009
30-40-15 12	MTC100YH2-009
30-40-20 03	MTC100YH2-009
30-40-20 05	MTC100YH2-009
33-10-05 05	MTC100YH2-009
33-10-05 07	MTC100YH2-009
33-10-05 08	MTC100YH2-009
33-10-05 09	MTC100YH2-009
33-10-05 11	MTC100YH2-009
33-40-20 04	MTC100YH2-009
34-13-01 04	MTC100YH2-009
34-13-01 08	MTC100YH2-009
DA19-P	
21-60-10 11	MTC100YC1-001
21-60-20 03	MTC100YC1-001
24-50-01 06	MTC100YC1-001
24-50-01 07	MTC100YC1-001
26-10-10 03	MTC100YC1-001
26-20-10 03	MTC100YC1-001
27-24-10 03	MTC100YC1-001
28-21-05 04	MTC100YC1-001
30-20-10 02	MTC100YC1-001

IDENT CH-SECT-UNIT-FIG	PART NUMBER
DA19-P	
30-40-15 11	MTC100YC1-001
30-40-15 12	MTC100YC1-001
30-40-20 05	MTC100YC1-001
33-10-05 09	MTC100YC1-001
33-10-05 11	MTC100YC1-001
33-40-20 04	MTC100YC1-001
34-13-01 04	MTC100YC1-001
34-13-01 08	MTC100YC1-001
21-60-10 11	MTC100YC1-002
21-60-20 03	MTC100YC1-002
24-50-01 06	MTC100YC1-002
24-50-01 07	MTC100YC1-002
26-10-10 03	MTC100YC1-002
26-20-10 03	MTC100YC1-002
27-24-10 03	MTC100YC1-002
28-21-05 04	MTC100YC1-002
30-20-10 02	MTC100YC1-002
30-40-15 11	MTC100YC1-002
30-40-15 12	MTC100YC1-002
30-40-20 05	MTC100YC1-002
33-10-05 09	MTC100YC1-002
33-10-05 11	MTC100YC1-002
33-40-20 04	MTC100YC1-002
34-13-01 04	MTC100YC1-002
34-13-01 08	MTC100YC1-002
21-60-10 11	MTC100YH2-009
21-60-20 03	MTC100YH2-009
24-50-01 06	MTC100YH2-009
24-50-01 07	MTC100YH2-009
26-10-10 03	MTC100YH2-009
26-20-10 03	MTC100YH2-009
27-24-10 03	MTC100YH2-009
28-21-05 04	MTC100YH2-009
30-20-10 02	MTC100YH2-009
30-40-15 11	MTC100YH2-009
30-40-15 12	MTC100YH2-009
30-40-20 05	MTC100YH2-009
33-10-05 09	MTC100YH2-009
33-10-05 11	MTC100YH2-009
33-40-20 04	MTC100YH2-009
34-13-01 04	MTC100YH2-009
34-13-01 08	MTC100YH2-009
DA19-R	
28-21-05 03	MTC100KT1-1103
28-21-05 03	MTC100KT1-1104
21-60-10 08	MTC100KT2-1103
21-60-10 10	MTC100KT2-1103
21-60-10 11	MTC100KT2-1103
21-60-20 02	MTC100KT2-1103
21-60-20 03	MTC100KT2-1103

IDENT CH-SECT-UNIT-FIG	PART NUMBER
DA19-R	
24-50-01 05	MTC100KT2-1103
24-50-01 06	MTC100KT2-1103
24-50-01 07	MTC100KT2-1103
26-10-10 03	MTC100KT2-1103
26-20-10 03	MTC100KT2-1103
27-24-10 02	MTC100KT2-1103
27-24-10 03	MTC100KT2-1103
27-61-20 04	MTC100KT2-1103
28-21-05 02	MTC100KT2-1103
28-21-05 04	MTC100KT2-1103
30-20-10 02	MTC100KT2-1103
30-40-15 07	MTC100KT2-1103
30-40-15 10	MTC100KT2-1103
30-40-15 11	MTC100KT2-1103
30-40-15 12	MTC100KT2-1103
30-40-20 03	MTC100KT2-1103
30-40-20 05	MTC100KT2-1103
33-10-05 05	MTC100KT2-1103
33-10-05 07	MTC100KT2-1103
33-10-05 08	MTC100KT2-1103
33-10-05 09	MTC100KT2-1103
33-10-05 11	MTC100KT2-1103
33-40-20 04	MTC100KT2-1103
34-13-01 04	MTC100KT2-1103
34-13-01 08	MTC100KT2-1103
21-60-10 08	MTC100KT2-1104
21-60-10 10	MTC100KT2-1104
21-60-10 11	MTC100KT2-1104
21-60-20 02	MTC100KT2-1104
21-60-20 03	MTC100KT2-1104
24-50-01 05	MTC100KT2-1104
24-50-01 06	MTC100KT2-1104
24-50-01 07	MTC100KT2-1104
26-10-10 03	MTC100KT2-1104
26-20-10 03	MTC100KT2-1104
27-24-10 02	MTC100KT2-1104
27-24-10 03	MTC100KT2-1104
27-61-20 04	MTC100KT2-1104
28-21-05 02	MTC100KT2-1104
28-21-05 04	MTC100KT2-1104
30-20-10 02	MTC100KT2-1104
30-40-15 07	MTC100KT2-1104
30-40-15 10	MTC100KT2-1104
30-40-15 11	MTC100KT2-1104
30-40-15 12	MTC100KT2-1104
30-40-20 03	MTC100KT2-1104
30-40-20 05	MTC100KT2-1104
33-10-05 05	MTC100KT2-1104
33-10-05 07	MTC100KT2-1104
33-10-05 08	MTC100KT2-1104

IDENT CH-SECT-UNIT-FIG	PART NUMBER
DA19-R	
33-10-05 09	MTC100KT2-1104
33-10-05 11	MTC100KT2-1104
33-40-20 04	MTC100KT2-1104
34-13-01 04	MTC100KT2-1104
34-13-01 08	MTC100KT2-1104
28-21-05 03	MTC100YH1-004
21-60-10 08	MTC100YH2-010
21-60-10 10	MTC100YH2-010
21-60-10 11	MTC100YH2-010
21-60-20 02	MTC100YH2-010
21-60-20 03	MTC100YH2-010
24-50-01 05	MTC100YH2-010
24-50-01 06	MTC100YH2-010
24-50-01 07	MTC100YH2-010
26-10-10 03	MTC100YH2-010
26-20-10 03	MTC100YH2-010
27-24-10 02	MTC100YH2-010
27-24-10 03	MTC100YH2-010
27-61-20 04	MTC100YH2-010
28-21-05 02	MTC100YH2-010
28-21-05 04	MTC100YH2-010
30-20-10 02	MTC100YH2-010
30-40-15 07	MTC100YH2-010
30-40-15 10	MTC100YH2-010
30-40-15 11	MTC100YH2-010
30-40-15 12	MTC100YH2-010
30-40-20 03	MTC100YH2-010
30-40-20 05	MTC100YH2-010
33-10-05 05	MTC100YH2-010
33-10-05 07	MTC100YH2-010
33-10-05 08	MTC100YH2-010
33-10-05 09	MTC100YH2-010
33-10-05 11	MTC100YH2-010
33-40-20 04	MTC100YH2-010
34-13-01 04	MTC100YH2-010
34-13-01 08	MTC100YH2-010
DA19-R	
21-60-10 11	MTC100YC1-003
21-60-20 03	MTC100YC1-003
24-50-01 06	MTC100YC1-003
24-50-01 07	MTC100YC1-003
26-10-10 03	MTC100YC1-003
26-20-10 03	MTC100YC1-003
27-24-10 03	MTC100YC1-003
28-21-05 04	MTC100YC1-003
30-20-10 02	MTC100YC1-003
30-40-15 11	MTC100YC1-003
30-40-15 12	MTC100YC1-003
30-40-20 05	MTC100YC1-003
33-10-05 09	MTC100YC1-003

IDENT CH-SECT-UNIT-FIG	PART NUMBER
DA19-R	
33-10-05 11	MTC100YC1-003
33-40-20 04	MTC100YC1-003
34-13-01 04	MTC100YC1-003
34-13-01 08	MTC100YC1-003
21-60-10 11	MTC100YC1-004
21-60-20 03	MTC100YC1-004
24-50-01 06	MTC100YC1-004
24-50-01 07	MTC100YC1-004
26-10-10 03	MTC100YC1-004
26-20-10 03	MTC100YC1-004
27-24-10 03	MTC100YC1-004
28-21-05 04	MTC100YC1-004
30-20-10 02	MTC100YC1-004
30-40-15 11	MTC100YC1-004
30-40-15 12	MTC100YC1-004
30-40-20 05	MTC100YC1-004
33-10-05 09	MTC100YC1-004
33-10-05 11	MTC100YC1-004
33-40-20 04	MTC100YC1-004
34-13-01 04	MTC100YC1-004
34-13-01 08	MTC100YC1-004
21-60-10 11	MTC100YH2-010
21-60-20 03	MTC100YH2-010
24-50-01 06	MTC100YH2-010
24-50-01 07	MTC100YH2-010
26-10-10 03	MTC100YH2-010
26-20-10 03	MTC100YH2-010
27-24-10 03	MTC100YH2-010
28-21-05 04	MTC100YH2-010
30-20-10 02	MTC100YH2-010
30-40-15 11	MTC100YH2-010
30-40-15 12	MTC100YH2-010
30-40-20 05	MTC100YH2-010
33-10-05 09	MTC100YH2-010
33-10-05 11	MTC100YH2-010
33-40-20 04	MTC100YH2-010
34-13-01 04	MTC100YH2-010
34-13-01 08	MTC100YH2-010
DA2-P	
27-33-00 05	MTC100KTI-1102
27-33-00 07	MTC100KTI-1102
30-30-20 02	MTC100KTI-1102
21-30-10 04	MTC100KT1-1101
21-60-10 08	MTC100KT1-1101
21-60-10 10	MTC100KT1-1101
21-60-10 11	MTC100KT1-1101
24-30-20 02	MTC100KT1-1101
24-30-20 03	MTC100KT1-1101
27-33-00 05	MTC100KT1-1101
27-33-00 07	MTC100KT1-1101

IDENT CH-SECT-UNIT-FIG	PART NUMBER
DA2-P	
28-21-05 02	MTC100KT1-1101
28-21-05 03	MTC100KT1-1101
28-21-05 04	MTC100KT1-1101
30-30-20 02	MTC100KT1-1101
33-10-05 05	MTC100KT1-1101
33-10-05 07	MTC100KT1-1101
33-10-05 08	MTC100KT1-1101
33-10-05 09	MTC100KT1-1101
33-10-05 11	MTC100KT1-1101
34-13-01 04	MTC100KT1-1101
34-13-01 08	MTC100KT1-1101
73-20-10 03	MTC100KT1-1101
21-30-10 04	MTC100KT1-1102
21-60-10 08	MTC100KT1-1102
21-60-10 10	MTC100KT1-1102
21-60-10 11	MTC100KT1-1102
24-30-20 02	MTC100KT1-1102
24-30-20 03	MTC100KT1-1102
28-21-05 02	MTC100KT1-1102
28-21-05 03	MTC100KT1-1102
28-21-05 04	MTC100KT1-1102
33-10-05 05	MTC100KT1-1102
33-10-05 07	MTC100KT1-1102
33-10-05 08	MTC100KT1-1102
33-10-05 09	MTC100KT1-1102
33-10-05 11	MTC100KT1-1102
34-13-01 04	MTC100KT1-1102
34-13-01 08	MTC100KT1-1102
73-20-10 03	MTC100KT1-1102
21-30-10 04	MTC100YH1-003
21-60-10 08	MTC100YH1-003
21-60-10 10	MTC100YH1-003
21-60-10 11	MTC100YH1-003
24-30-20 02	MTC100YH1-003
24-30-20 03	MTC100YH1-003
27-33-00 05	MTC100YH1-003
27-33-00 07	MTC100YH1-003
28-21-05 02	MTC100YH1-003
28-21-05 03	MTC100YH1-003
28-21-05 04	MTC100YH1-003
30-30-20 02	MTC100YH1-003
33-10-05 05	MTC100YH1-003
33-10-05 07	MTC100YH1-003
33-10-05 08	MTC100YH1-003
33-10-05 09	MTC100YH1-003
33-10-05 11	MTC100YH1-003
34-13-01 04	MTC100YH1-003
34-13-01 08	MTC100YH1-003
73-20-10 03	MTC100YH1-003
DA2-P	

IDENT CH-SECT-UNIT-FIG	PART NUMBER
DA2-P	
21-30-10 04	MTC100YC1-005
21-60-10 11	MTC100YC1-005
24-30-20 02	MTC100YC1-005
24-30-20 03	MTC100YC1-005
27-33-00 07	MTC100YC1-005
28-21-05 04	MTC100YC1-005
30-30-20 02	MTC100YC1-005
33-10-05 09	MTC100YC1-005
33-10-05 11	MTC100YC1-005
34-13-01 04	MTC100YC1-005
34-13-01 08	MTC100YC1-005
73-20-10 03	MTC100YC1-005
21-30-10 04	MTC100YH1-003
21-60-10 11	MTC100YH1-003
24-30-20 02	MTC100YH1-003
24-30-20 03	MTC100YH1-003
27-33-00 07	MTC100YH1-003
28-21-05 04	MTC100YH1-003
30-30-20 02	MTC100YH1-003
33-10-05 09	MTC100YH1-003
33-10-05 11	MTC100YH1-003
34-13-01 04	MTC100YH1-003
34-13-01 08	MTC100YH1-003
73-20-10 03	MTC100YH1-003
DA2-R	
21-30-10 04	MTC100KT1-1103
21-60-10 08	MTC100KT1-1103
21-60-10 10	MTC100KT1-1103
21-60-10 11	MTC100KT1-1103
24-30-20 02	MTC100KT1-1103
24-30-20 03	MTC100KT1-1103
27-33-00 05	MTC100KT1-1103
27-33-00 07	MTC100KT1-1103
28-21-05 02	MTC100KT1-1103
28-21-05 03	MTC100KT1-1103
28-21-05 04	MTC100KT1-1103
30-30-20 02	MTC100KT1-1103
33-10-05 05	MTC100KT1-1103
33-10-05 07	MTC100KT1-1103
33-10-05 08	MTC100KT1-1103
33-10-05 09	MTC100KT1-1103
33-10-05 11	MTC100KT1-1103
34-13-01 04	MTC100KT1-1103
34-13-01 08	MTC100KT1-1103
73-20-10 03	MTC100KT1-1103
21-30-10 04	MTC100KT1-1104
21-60-10 08	MTC100KT1-1104
21-60-10 10	MTC100KT1-1104
21-60-10 11	MTC100KT1-1104
24-30-20 02	MTC100KT1-1104

IDENT CH-SECT-UNIT-FIG	PART NUMBER
DA2-R	
24-30-20 03	MTC100KT1-1104
27-33-00 05	MTC100KT1-1104
27-33-00 07	MTC100KT1-1104
28-21-05 02	MTC100KT1-1104
28-21-05 03	MTC100KT1-1104
28-21-05 04	MTC100KT1-1104
30-30-20 02	MTC100KT1-1104
33-10-05 05	MTC100KT1-1104
33-10-05 07	MTC100KT1-1104
33-10-05 08	MTC100KT1-1104
33-10-05 09	MTC100KT1-1104
33-10-05 11	MTC100KT1-1104
34-13-01 04	MTC100KT1-1104
34-13-01 08	MTC100KT1-1104
73-20-10 03	MTC100KT1-1104
21-30-10 04	MTC100YH1-004
21-60-10 08	MTC100YH1-004
21-60-10 10	MTC100YH1-004
21-60-10 11	MTC100YH1-004
24-30-20 02	MTC100YH1-004
24-30-20 03	MTC100YH1-004
27-33-00 05	MTC100YH1-004
27-33-00 07	MTC100YH1-004
28-21-05 02	MTC100YH1-004
28-21-05 03	MTC100YH1-004
28-21-05 04	MTC100YH1-004
30-30-20 02	MTC100YH1-004
33-10-05 05	MTC100YH1-004
33-10-05 07	MTC100YH1-004
33-10-05 08	MTC100YH1-004
33-10-05 09	MTC100YH1-004
33-10-05 11	MTC100YH1-004
34-13-01 04	MTC100YH1-004
34-13-01 08	MTC100YH1-004
73-20-10 03	MTC100YH1-004
DA2-R	
21-30-10 04	MTC100YC1-006
21-60-10 11	MTC100YC1-006
24-30-20 02	MTC100YC1-006
24-30-20 03	MTC100YC1-006
27-33-00 07	MTC100YC1-006
28-21-05 04	MTC100YC1-006
30-30-20 02	MTC100YC1-006
33-10-05 09	MTC100YC1-006
33-10-05 11	MTC100YC1-006
34-13-01 04	MTC100YC1-006
34-13-01 08	MTC100YC1-006
73-20-10 03	MTC100YC1-006
21-30-10 04	MTC100YH1-004
21-60-10 11	MTC100YH1-004

IDENT CH-SECT-UNIT-FIG	PART NUMBER
DA2-R	
24-30-20 02	MTC100YH1-004
24-30-20 03	MTC100YH1-004
27-33-00 07	MTC100YH1-004
28-21-05 04	MTC100YH1-004
30-30-20 02	MTC100YH1-004
33-10-05 09	MTC100YH1-004
33-10-05 11	MTC100YH1-004
34-13-01 04	MTC100YH1-004
34-13-01 08	MTC100YH1-004
73-20-10 03	MTC100YH1-004
DA20-P	
21-20-10 03	MTC100KT2-1101
21-31-10 07	MTC100KT2-1101
21-60-10 08	MTC100KT2-1101
21-60-10 10	MTC100KT2-1101
21-60-10 11	MTC100KT2-1101
21-60-20 02	MTC100KT2-1101
21-60-20 03	MTC100KT2-1101
24-50-01 05	MTC100KT2-1101
24-50-01 06	MTC100KT2-1101
24-50-01 07	MTC100KT2-1101
26-10-10 03	MTC100KT2-1101
26-20-10 03	MTC100KT2-1101
27-24-10 02	MTC100KT2-1101
27-24-10 03	MTC100KT2-1101
28-21-05 02	MTC100KT2-1101
28-21-05 03	MTC100KT2-1101
28-21-05 04	MTC100KT2-1101
30-10-10 11	MTC100KT2-1101
30-20-10 02	MTC100KT2-1101
30-40-15 07	MTC100KT2-1101
30-40-15 10	MTC100KT2-1101
30-40-15 11	MTC100KT2-1101
30-40-15 12	MTC100KT2-1101
30-40-20 03	MTC100KT2-1101
30-40-20 05	MTC100KT2-1101
30-80-10 02	MTC100KT2-1101
30-80-10 03	MTC100KT2-1101
33-10-05 05	MTC100KT2-1101
33-10-05 07	MTC100KT2-1101
33-10-05 08	MTC100KT2-1101
33-10-05 09	MTC100KT2-1101
33-10-05 11	MTC100KT2-1101
33-40-10 05	MTC100KT2-1101
33-40-20 04	MTC100KT2-1101
34-13-01 04	MTC100KT2-1101
34-13-01 08	MTC100KT2-1101
21-20-10 03	MTC100KT2-1102
21-31-10 07	MTC100KT2-1102
21-60-10 08	MTC100KT2-1102

IDENT CH-SECT-UNIT-FIG	PART NUMBER
DA20-P	
21-60-10 10	MTC100KT2-1102
21-60-10 11	MTC100KT2-1102
21-60-20 02	MTC100KT2-1102
21-60-20 03	MTC100KT2-1102
24-50-01 05	MTC100KT2-1102
24-50-01 06	MTC100KT2-1102
24-50-01 07	MTC100KT2-1102
26-10-10 03	MTC100KT2-1102
26-20-10 03	MTC100KT2-1102
27-24-10 02	MTC100KT2-1102
27-24-10 03	MTC100KT2-1102
28-21-05 02	MTC100KT2-1102
28-21-05 03	MTC100KT2-1102
28-21-05 04	MTC100KT2-1102
30-10-10 11	MTC100KT2-1102
30-20-10 02	MTC100KT2-1102
30-40-15 07	MTC100KT2-1102
30-40-15 10	MTC100KT2-1102
30-40-15 11	MTC100KT2-1102
30-40-15 12	MTC100KT2-1102
30-40-20 03	MTC100KT2-1102
30-40-20 05	MTC100KT2-1102
30-80-10 02	MTC100KT2-1102
30-80-10 03	MTC100KT2-1102
33-10-05 05	MTC100KT2-1102
33-10-05 07	MTC100KT2-1102
33-10-05 08	MTC100KT2-1102
33-10-05 09	MTC100KT2-1102
33-10-05 11	MTC100KT2-1102
33-40-10 05	MTC100KT2-1102
33-40-20 04	MTC100KT2-1102
34-13-01 04	MTC100KT2-1102
34-13-01 08	MTC100KT2-1102
33-40-10 06	MTC100YC1-001
33-40-10 06	MTC100YC1-002
21-20-10 03	MTC100YH2-009
21-31-10 07	MTC100YH2-009
21-60-10 08	MTC100YH2-009
21-60-10 10	MTC100YH2-009
21-60-10 11	MTC100YH2-009
21-60-20 02	MTC100YH2-009
21-60-20 03	MTC100YH2-009
24-50-01 05	MTC100YH2-009
24-50-01 06	MTC100YH2-009
24-50-01 07	MTC100YH2-009
26-10-10 03	MTC100YH2-009
26-20-10 03	MTC100YH2-009
27-24-10 02	MTC100YH2-009
27-24-10 03	MTC100YH2-009
28-21-05 02	MTC100YH2-009

IDENT CH-SECT-UNIT-FIG	PART NUMBER
DA20-P	
28-21-05 03	MTC100YH2-009
28-21-05 04	MTC100YH2-009
30-10-10 11	MTC100YH2-009
30-20-10 02	MTC100YH2-009
30-40-15 07	MTC100YH2-009
30-40-15 10	MTC100YH2-009
30-40-15 11	MTC100YH2-009
30-40-15 12	MTC100YH2-009
30-40-20 03	MTC100YH2-009
30-40-20 05	MTC100YH2-009
30-80-10 02	MTC100YH2-009
30-80-10 03	MTC100YH2-009
33-10-05 05	MTC100YH2-009
33-10-05 07	MTC100YH2-009
33-10-05 08	MTC100YH2-009
33-10-05 09	MTC100YH2-009
33-10-05 11	MTC100YH2-009
33-40-10 05	MTC100YH2-009
33-40-10 06	MTC100YH2-009
33-40-20 04	MTC100YH2-009
34-13-01 04	MTC100YH2-009
34-13-01 08	MTC100YH2-009
DA20-P	
21-20-10 03	MTC100YC1-001
21-31-10 07	MTC100YC1-001
21-60-10 11	MTC100YC1-001
21-60-20 03	MTC100YC1-001
24-50-01 06	MTC100YC1-001
24-50-01 07	MTC100YC1-001
26-10-10 03	MTC100YC1-001
26-20-10 03	MTC100YC1-001
27-24-10 03	MTC100YC1-001
28-21-05 04	MTC100YC1-001
30-10-10 11	MTC100YC1-001
30-20-10 02	MTC100YC1-001
30-40-15 11	MTC100YC1-001
30-40-15 12	MTC100YC1-001
30-40-20 05	MTC100YC1-001
30-80-10 03	MTC100YC1-001
33-10-05 09	MTC100YC1-001
33-10-05 11	MTC100YC1-001
33-40-10 05	MTC100YC1-001
33-40-20 04	MTC100YC1-001
34-13-01 04	MTC100YC1-001
34-13-01 08	MTC100YC1-001
21-20-10 03	MTC100YC1-002
21-31-10 07	MTC100YC1-002
21-60-10 11	MTC100YC1-002
21-60-20 03	MTC100YC1-002
24-50-01 06	MTC100YC1-002

IDENT CH-SECT-UNIT-FIG	PART NUMBER
DA20-P	
24-50-01 07	MTC100YC1-002
26-10-10 03	MTC100YC1-002
26-20-10 03	MTC100YC1-002
27-24-10 03	MTC100YC1-002
28-21-05 04	MTC100YC1-002
30-10-10 11	MTC100YC1-002
30-20-10 02	MTC100YC1-002
30-40-15 11	MTC100YC1-002
30-40-15 12	MTC100YC1-002
30-40-20 05	MTC100YC1-002
30-80-10 03	MTC100YC1-002
33-10-05 09	MTC100YC1-002
33-10-05 11	MTC100YC1-002
33-40-10 05	MTC100YC1-002
33-40-20 04	MTC100YC1-002
34-13-01 04	MTC100YC1-002
34-13-01 08	MTC100YC1-002
21-20-10 03	MTC100YH2-009
21-31-10 07	MTC100YH2-009
21-60-10 11	MTC100YH2-009
21-60-20 03	MTC100YH2-009
24-50-01 06	MTC100YH2-009
24-50-01 07	MTC100YH2-009
26-10-10 03	MTC100YH2-009
26-20-10 03	MTC100YH2-009
27-24-10 03	MTC100YH2-009
28-21-05 04	MTC100YH2-009
30-10-10 11	MTC100YH2-009
30-20-10 02	MTC100YH2-009
30-40-15 11	MTC100YH2-009
30-40-15 12	MTC100YH2-009
30-40-20 05	MTC100YH2-009
30-80-10 03	MTC100YH2-009
33-10-05 09	MTC100YH2-009
33-10-05 11	MTC100YH2-009
33-40-10 05	MTC100YH2-009
33-40-20 04	MTC100YH2-009
34-13-01 04	MTC100YH2-009
34-13-01 08	MTC100YH2-009
DA20-R	
21-20-10 03	MTC100KT2-1103
21-31-10 07	MTC100KT2-1103
21-60-10 08	MTC100KT2-1103
21-60-10 10	MTC100KT2-1103
21-60-10 11	MTC100KT2-1103
21-60-20 02	MTC100KT2-1103
21-60-20 03	MTC100KT2-1103
24-50-01 05	MTC100KT2-1103
24-50-01 06	MTC100KT2-1103
24-50-01 07	MTC100KT2-1103

IDENT CH-SECT-UNIT-FIG	PART NUMBER
DA20-R	
26-10-10 03	MTC100KT2-1103
26-20-10 03	MTC100KT2-1103
27-24-10 02	MTC100KT2-1103
27-24-10 03	MTC100KT2-1103
28-21-05 02	MTC100KT2-1103
28-21-05 03	MTC100KT2-1103
28-21-05 04	MTC100KT2-1103
30-10-10 11	MTC100KT2-1103
30-20-10 02	MTC100KT2-1103
30-40-15 07	MTC100KT2-1103
30-40-15 10	MTC100KT2-1103
30-40-15 11	MTC100KT2-1103
30-40-15 12	MTC100KT2-1103
30-40-20 03	MTC100KT2-1103
30-40-20 05	MTC100KT2-1103
30-80-10 02	MTC100KT2-1103
30-80-10 03	MTC100KT2-1103
33-10-05 05	MTC100KT2-1103
33-10-05 07	MTC100KT2-1103
33-10-05 08	MTC100KT2-1103
33-10-05 09	MTC100KT2-1103
33-10-05 11	MTC100KT2-1103
33-40-10 05	MTC100KT2-1103
33-40-20 04	MTC100KT2-1103
34-13-01 04	MTC100KT2-1103
34-13-01 08	MTC100KT2-1103
21-20-10 03	MTC100KT2-1104
21-31-10 07	MTC100KT2-1104
21-60-10 08	MTC100KT2-1104
21-60-10 10	MTC100KT2-1104
21-60-10 11	MTC100KT2-1104
21-60-20 02	MTC100KT2-1104
21-60-20 03	MTC100KT2-1104
24-50-01 05	MTC100KT2-1104
24-50-01 06	MTC100KT2-1104
24-50-01 07	MTC100KT2-1104
26-10-10 03	MTC100KT2-1104
26-20-10 03	MTC100KT2-1104
27-24-10 02	MTC100KT2-1104
27-24-10 03	MTC100KT2-1104
28-21-05 02	MTC100KT2-1104
28-21-05 03	MTC100KT2-1104
28-21-05 04	MTC100KT2-1104
30-10-10 11	MTC100KT2-1104
30-20-10 02	MTC100KT2-1104
30-40-15 07	MTC100KT2-1104
30-40-15 10	MTC100KT2-1104
30-40-15 11	MTC100KT2-1104
30-40-15 12	MTC100KT2-1104
30-40-20 03	MTC100KT2-1104

IDENT CH-SECT-UNIT-FIG	PART NUMBER
DA20-R	
30-40-20 05	MTC100KT2-1104
30-80-10 02	MTC100KT2-1104
30-80-10 03	MTC100KT2-1104
33-10-05 05	MTC100KT2-1104
33-10-05 07	MTC100KT2-1104
33-10-05 08	MTC100KT2-1104
33-10-05 09	MTC100KT2-1104
33-10-05 11	MTC100KT2-1104
33-40-10 05	MTC100KT2-1104
33-40-20 04	MTC100KT2-1104
34-13-01 04	MTC100KT2-1104
34-13-01 08	MTC100KT2-1104
33-40-10 06	MTC100YC1-003
33-40-10 06	MTC100YC1-004
21-20-10 03	MTC100YH2-010
21-31-10 07	MTC100YH2-010
21-60-10 08	MTC100YH2-010
21-60-10 10	MTC100YH2-010
21-60-10 11	MTC100YH2-010
21-60-20 02	MTC100YH2-010
21-60-20 03	MTC100YH2-010
24-50-01 05	MTC100YH2-010
24-50-01 06	MTC100YH2-010
24-50-01 07	MTC100YH2-010
26-10-10 03	MTC100YH2-010
26-20-10 03	MTC100YH2-010
27-24-10 02	MTC100YH2-010
27-24-10 03	MTC100YH2-010
28-21-05 02	MTC100YH2-010
28-21-05 03	MTC100YH2-010
28-21-05 04	MTC100YH2-010
30-10-10 11	MTC100YH2-010
30-20-10 02	MTC100YH2-010
30-40-15 07	MTC100YH2-010
30-40-15 10	MTC100YH2-010
30-40-15 11	MTC100YH2-010
30-40-15 12	MTC100YH2-010
30-40-20 03	MTC100YH2-010
30-40-20 05	MTC100YH2-010
30-80-10 02	MTC100YH2-010
30-80-10 03	MTC100YH2-010
33-10-05 05	MTC100YH2-010
33-10-05 07	MTC100YH2-010
33-10-05 08	MTC100YH2-010
33-10-05 09	MTC100YH2-010
33-10-05 11	MTC100YH2-010
33-40-10 05	MTC100YH2-010
33-40-10 06	MTC100YH2-010
33-40-20 04	MTC100YH2-010
34-13-01 04	MTC100YH2-010

IDENT CH-SECT-UNIT-FIG	PART NUMBER
DA20-R	
34-13-01 08	MTC100YH2-010
DA20-R	
21-20-10 03	MTC100YC1-003
21-31-10 07	MTC100YC1-003
21-60-10 11	MTC100YC1-003
21-60-20 03	MTC100YC1-003
24-50-01 06	MTC100YC1-003
24-50-01 07	MTC100YC1-003
26-10-10 03	MTC100YC1-003
26-20-10 03	MTC100YC1-003
27-24-10 03	MTC100YC1-003
28-21-05 04	MTC100YC1-003
30-10-10 11	MTC100YC1-003
30-20-10 02	MTC100YC1-003
30-40-15 11	MTC100YC1-003
30-40-15 12	MTC100YC1-003
30-40-20 05	MTC100YC1-003
30-80-10 03	MTC100YC1-003
33-10-05 09	MTC100YC1-003
33-10-05 11	MTC100YC1-003
33-40-10 05	MTC100YC1-003
33-40-20 04	MTC100YC1-003
34-13-01 04	MTC100YC1-003
34-13-01 08	MTC100YC1-003
21-20-10 03	MTC100YC1-004
21-31-10 07	MTC100YC1-004
21-60-10 11	MTC100YC1-004
21-60-20 03	MTC100YC1-004
24-50-01 06	MTC100YC1-004
24-50-01 07	MTC100YC1-004
26-10-10 03	MTC100YC1-004
26-20-10 03	MTC100YC1-004
27-24-10 03	MTC100YC1-004
28-21-05 04	MTC100YC1-004
30-10-10 11	MTC100YC1-004
30-20-10 02	MTC100YC1-004
30-40-15 11	MTC100YC1-004
30-40-15 12	MTC100YC1-004
30-40-20 05	MTC100YC1-004
30-80-10 03	MTC100YC1-004
33-10-05 09	MTC100YC1-004
33-10-05 11	MTC100YC1-004
33-40-10 05	MTC100YC1-004
33-40-20 04	MTC100YC1-004
34-13-01 04	MTC100YC1-004
34-13-01 08	MTC100YC1-004
21-20-10 03	MTC100YH2-010
21-31-10 07	MTC100YH2-010
21-60-10 11	MTC100YH2-010
21-60-20 03	MTC100YH2-010

IDENT CH-SECT-UNIT-FIG	PART NUMBER
DA20-R	
24-50-01 06	MTC100YH2-010
24-50-01 07	MTC100YH2-010
26-10-10 03	MTC100YH2-010
26-20-10 03	MTC100YH2-010
27-24-10 03	MTC100YH2-010
28-21-05 04	MTC100YH2-010
30-10-10 11	MTC100YH2-010
30-20-10 02	MTC100YH2-010
30-40-15 11	MTC100YH2-010
30-40-15 12	MTC100YH2-010
30-40-20 05	MTC100YH2-010
30-80-10 03	MTC100YH2-010
33-10-05 09	MTC100YH2-010
33-10-05 11	MTC100YH2-010
33-40-10 05	MTC100YH2-010
33-40-20 04	MTC100YH2-010
34-13-01 04	MTC100YH2-010
34-13-01 08	MTC100YH2-010
DA21-P	
21-30-10 02	MTC100KT2-1101
21-30-10 04	MTC100KT2-1101
21-60-10 08	MTC100KT2-1101
21-60-10 10	MTC100KT2-1101
21-60-10 11	MTC100KT2-1101
24-21-17 03	MTC100KT2-1101
24-21-17 04	MTC100KT2-1101
24-50-01 05	MTC100KT2-1101
24-50-01 06	MTC100KT2-1101
24-50-01 07	MTC100KT2-1101
27-33-00 05	MTC100KT2-1101
27-33-00 07	MTC100KT2-1101
30-80-10 02	MTC100KT2-1101
30-80-10 03	MTC100KT2-1101
33-10-05 05	MTC100KT2-1101
33-10-05 07	MTC100KT2-1101
33-10-05 08	MTC100KT2-1101
33-10-05 09	MTC100KT2-1101
33-10-05 11	MTC100KT2-1101
33-30-15 07	MTC100KT2-1101
33-40-30 03	MTC100KT2-1101
21-30-10 02	MTC100KT2-1102
21-30-10 04	MTC100KT2-1102
21-60-10 08	MTC100KT2-1102
21-60-10 10	MTC100KT2-1102
21-60-10 11	MTC100KT2-1102
24-21-17 03	MTC100KT2-1102
24-21-17 04	MTC100KT2-1102
24-50-01 05	MTC100KT2-1102
24-50-01 06	MTC100KT2-1102
24-50-01 07	MTC100KT2-1102

IDENT CH-SECT-UNIT-FIG	PART NUMBER
DA21-P	
27-33-00 05	MTC100KT2-1102
27-33-00 07	MTC100KT2-1102
30-80-10 02	MTC100KT2-1102
30-80-10 03	MTC100KT2-1102
33-10-05 05	MTC100KT2-1102
33-10-05 07	MTC100KT2-1102
33-10-05 08	MTC100KT2-1102
33-10-05 09	MTC100KT2-1102
33-10-05 11	MTC100KT2-1102
33-30-15 07	MTC100KT2-1102
33-40-30 03	MTC100KT2-1102
33-20-10 10	MTC100YC1-001
33-20-10 10	MTC100YC1-002
21-30-10 02	MTC100YH2-009
21-30-10 04	MTC100YH2-009
21-60-10 08	MTC100YH2-009
21-60-10 10	MTC100YH2-009
21-60-10 11	MTC100YH2-009
24-21-17 03	MTC100YH2-009
24-21-17 04	MTC100YH2-009
24-50-01 05	MTC100YH2-009
24-50-01 06	MTC100YH2-009
24-50-01 07	MTC100YH2-009
27-33-00 05	MTC100YH2-009
27-33-00 07	MTC100YH2-009
30-80-10 02	MTC100YH2-009
30-80-10 03	MTC100YH2-009
33-10-05 05	MTC100YH2-009
33-10-05 07	MTC100YH2-009
33-10-05 08	MTC100YH2-009
33-10-05 09	MTC100YH2-009
33-10-05 11	MTC100YH2-009
33-20-10 10	MTC100YH2-009
33-30-15 07	MTC100YH2-009
33-40-30 03	MTC100YH2-009
DA21-P	
21-30-10 04	MTC100YC1-001
21-60-10 11	MTC100YC1-001
24-21-17 04	MTC100YC1-001
24-50-01 06	MTC100YC1-001
24-50-01 07	MTC100YC1-001
27-33-00 07	MTC100YC1-001
30-80-10 03	MTC100YC1-001
33-10-05 09	MTC100YC1-001
33-10-05 11	MTC100YC1-001
33-40-30 03	MTC100YC1-001
21-30-10 04	MTC100YC1-002
21-60-10 11	MTC100YC1-002
24-21-17 04	MTC100YC1-002
24-50-01 06	MTC100YC1-002

IDENT CH-SECT-UNIT-FIG	PART NUMBER
DA21-P	
24-50-01 07	MTC100YC1-002
27-33-00 07	MTC100YC1-002
30-80-10 03	MTC100YC1-002
33-10-05 09	MTC100YC1-002
33-10-05 11	MTC100YC1-002
33-40-30 03	MTC100YC1-002
21-30-10 04	MTC100YH2-009
21-60-10 11	MTC100YH2-009
24-21-17 04	MTC100YH2-009
24-50-01 06	MTC100YH2-009
24-50-01 07	MTC100YH2-009
27-33-00 07	MTC100YH2-009
30-80-10 03	MTC100YH2-009
33-10-05 09	MTC100YH2-009
33-10-05 11	MTC100YH2-009
33-40-30 03	MTC100YH2-009
DA21-R	
21-30-10 02	MTC100KT2-1103
21-30-10 04	MTC100KT2-1103
21-60-10 08	MTC100KT2-1103
21-60-10 10	MTC100KT2-1103
21-60-10 11	MTC100KT2-1103
24-21-17 03	MTC100KT2-1103
24-21-17 04	MTC100KT2-1103
24-50-01 05	MTC100KT2-1103
24-50-01 06	MTC100KT2-1103
24-50-01 07	MTC100KT2-1103
27-33-00 05	MTC100KT2-1103
27-33-00 07	MTC100KT2-1103
30-80-10 02	MTC100KT2-1103
30-80-10 03	MTC100KT2-1103
33-10-05 05	MTC100KT2-1103
33-10-05 07	MTC100KT2-1103
33-10-05 08	MTC100KT2-1103
33-10-05 09	MTC100KT2-1103
33-10-05 11	MTC100KT2-1103
33-30-15 07	MTC100KT2-1103
33-40-30 03	MTC100KT2-1103
21-30-10 02	MTC100KT2-1104
21-30-10 04	MTC100KT2-1104
21-60-10 08	MTC100KT2-1104
21-60-10 10	MTC100KT2-1104
21-60-10 11	MTC100KT2-1104
24-21-17 03	MTC100KT2-1104
24-21-17 04	MTC100KT2-1104
24-50-01 05	MTC100KT2-1104
24-50-01 06	MTC100KT2-1104
24-50-01 07	MTC100KT2-1104
27-33-00 05	MTC100KT2-1104
27-33-00 07	MTC100KT2-1104

IDENT CH-SECT-UNIT-FIG	PART NUMBER
DA21-R	
30-80-10 02	MTC100KT2-1104
30-80-10 03	MTC100KT2-1104
33-10-05 05	MTC100KT2-1104
33-10-05 07	MTC100KT2-1104
33-10-05 08	MTC100KT2-1104
33-10-05 09	MTC100KT2-1104
33-10-05 11	MTC100KT2-1104
33-30-15 07	MTC100KT2-1104
33-40-30 03	MTC100KT2-1104
33-20-10 10	MTC100YC1-003
33-20-10 10	MTC100YC1-004
21-30-10 02	MTC100YH2-010
21-30-10 04	MTC100YH2-010
21-60-10 08	MTC100YH2-010
21-60-10 10	MTC100YH2-010
21-60-10 11	MTC100YH2-010
24-21-17 03	MTC100YH2-010
24-21-17 04	MTC100YH2-010
24-50-01 05	MTC100YH2-010
24-50-01 06	MTC100YH2-010
24-50-01 07	MTC100YH2-010
27-33-00 05	MTC100YH2-010
27-33-00 07	MTC100YH2-010
30-80-10 02	MTC100YH2-010
30-80-10 03	MTC100YH2-010
33-10-05 05	MTC100YH2-010
33-10-05 07	MTC100YH2-010
33-10-05 08	MTC100YH2-010
33-10-05 09	MTC100YH2-010
33-10-05 11	MTC100YH2-010
33-20-10 10	MTC100YH2-010
33-30-15 07	MTC100YH2-010
33-40-30 03	MTC100YH2-010
DA21-R	
21-30-10 04	MTC100YC1-003
21-60-10 11	MTC100YC1-003
24-21-17 04	MTC100YC1-003
24-50-01 06	MTC100YC1-003
24-50-01 07	MTC100YC1-003
27-33-00 07	MTC100YC1-003
30-80-10 03	MTC100YC1-003
33-10-05 09	MTC100YC1-003
33-10-05 11	MTC100YC1-003
33-40-30 03	MTC100YC1-003
21-30-10 04	MTC100YC1-004
21-60-10 11	MTC100YC1-004
24-21-17 04	MTC100YC1-004
24-50-01 06	MTC100YC1-004
24-50-01 07	MTC100YC1-004
27-33-00 07	MTC100YC1-004

IDENT CH-SECT-UNIT-FIG	PART NUMBER
DA21-R	
30-80-10 03	MTC100YC1-004
33-10-05 09	MTC100YC1-004
33-10-05 11	MTC100YC1-004
33-40-30 03	MTC100YC1-004
21-30-10 04	MTC100YH2-010
21-60-10 11	MTC100YH2-010
24-21-17 04	MTC100YH2-010
24-50-01 06	MTC100YH2-010
24-50-01 07	MTC100YH2-010
27-33-00 07	MTC100YH2-010
30-80-10 03	MTC100YH2-010
33-10-05 09	MTC100YH2-010
33-10-05 11	MTC100YH2-010
33-40-30 03	MTC100YH2-010
DA22-P	
33-40-10 06	MTCR161-04P
DA22-P	
30-30-31 02	MTCR161-04P
33-40-10 05	MTCR161-04P
DA22-R	
33-40-10 06	MTCR101-04S
DA22-R	
30-30-31 02	MTCR101-04S
33-40-10 05	MTCR101-04S
DA23-P	
33-40-10 06	MTCR161-04P
DA23-P	
21-20-10 03	MTCR161-04P
30-30-10 02	MTCR161-04P
30-30-31 02	MTCR161-04P
33-40-10 05	MTCR161-04P
DA23-R	
33-40-10 06	MTCR101-04S
DA23-R	
21-20-10 03	MTCR101-04S
30-30-10 02	MTCR101-04S
30-30-31 02	MTCR101-04S
33-40-10 05	MTCR101-04S
DA24-P	
31-50-01 04	MTC100KT1-1101
31-50-01 07	MTC100KT1-1101
31-50-01 08	MTC100KT1-1101
31-50-01 09	MTC100KT1-1101
31-50-01 14	MTC100KT1-1101
80-10-10 04	MTC100KT1-1101
31-50-01 04	MTC100KT1-1102
31-50-01 07	MTC100KT1-1102
31-50-01 08	MTC100KT1-1102
31-50-01 09	MTC100KT1-1102
31-50-01 14	MTC100KT1-1102

IDENT CH-SECT-UNIT-FIG	PART NUMBER
DA24-P	
80-10-10 04	MTC100KT1-1102
31-50-01 04	MTC100YH1-003
31-50-01 07	MTC100YH1-003
31-50-01 08	MTC100YH1-003
31-50-01 09	MTC100YH1-003
31-50-01 14	MTC100YH1-003
80-10-10 04	MTC100YH1-003
DA24-P	
31-50-01 09	MTC100YC1-005
31-50-01 14	MTC100YC1-005
80-10-10 04	MTC100YC1-005
31-50-01 09	MTC100YH1-003
31-50-01 14	MTC100YH1-003
80-10-10 04	MTC100YH1-003
DA24-R	
31-50-01 04	MTC100KT1-1103
31-50-01 07	MTC100KT1-1103
31-50-01 08	MTC100KT1-1103
31-50-01 09	MTC100KT1-1103
31-50-01 14	MTC100KT1-1103
80-10-10 04	MTC100KT1-1103
31-50-01 04	MTC100KT1-1104
31-50-01 07	MTC100KT1-1104
31-50-01 08	MTC100KT1-1104
31-50-01 09	MTC100KT1-1104
31-50-01 14	MTC100KT1-1104
80-10-10 04	MTC100KT1-1104
31-50-01 04	MTC100YH1-004
31-50-01 07	MTC100YH1-004
31-50-01 08	MTC100YH1-004
31-50-01 09	MTC100YH1-004
31-50-01 14	MTC100YH1-004
80-10-10 04	MTC100YH1-004
DA24-R	
31-50-01 09	MTC100YC1-006
31-50-01 14	MTC100YC1-006
80-10-10 04	MTC100YC1-006
31-50-01 09	MTC100YH1-004
31-50-01 14	MTC100YH1-004
80-10-10 04	MTC100YH1-004
DA25-P	
31-50-01 04	MTC100KT1-1101
31-50-01 07	MTC100KT1-1101
31-50-01 08	MTC100KT1-1101
31-50-01 09	MTC100KT1-1101
31-50-01 14	MTC100KT1-1101
31-50-01 04	MTC100KT1-1102
31-50-01 07	MTC100KT1-1102
31-50-01 08	MTC100KT1-1102
31-50-01 09	MTC100KT1-1102

IDENT CH-SECT-UNIT-FIG	PART NUMBER
DA25-P	
31-50-01 14	MTC100KT1-1102
31-50-01 04	MTC100YH1-003
31-50-01 07	MTC100YH1-003
31-50-01 08	MTC100YH1-003
31-50-01 09	MTC100YH1-003
31-50-01 14	MTC100YH1-003
DA25-P	
31-50-01 09	MTC100YC1-005
31-50-01 14	MTC100YC1-005
31-50-01 09	MTC100YH1-003
31-50-01 14	MTC100YH1-003
DA25-R	
31-50-01 04	MTC100KT1-1103
31-50-01 07	MTC100KT1-1103
31-50-01 08	MTC100KT1-1103
31-50-01 09	MTC100KT1-1103
31-50-01 14	MTC100KT1-1103
31-50-01 04	MTC100KT1-1104
31-50-01 07	MTC100KT1-1104
31-50-01 08	MTC100KT1-1104
31-50-01 09	MTC100KT1-1104
31-50-01 14	MTC100KT1-1104
31-50-01 04	MTC100YH1-004
31-50-01 07	MTC100YH1-004
31-50-01 08	MTC100YH1-004
31-50-01 09	MTC100YH1-004
31-50-01 14	MTC100YH1-004
DA25-R	
31-50-01 09	MTC100YC1-006
31-50-01 14	MTC100YC1-006
31-50-01 09	MTC100YH1-004
31-50-01 14	MTC100YH1-004
DA26-P	
31-50-01 04	MTC100KT1-1101
31-50-01 07	MTC100KT1-1101
31-50-01 08	MTC100KT1-1101
31-50-01 09	MTC100KT1-1101
31-50-01 14	MTC100KT1-1101
31-50-01 04	MTC100KT1-1102
31-50-01 07	MTC100KT1-1102
31-50-01 08	MTC100KT1-1102
31-50-01 09	MTC100KT1-1102
31-50-01 14	MTC100KT1-1102
31-50-01 04	MTC100YH1-003
31-50-01 07	MTC100YH1-003
31-50-01 08	MTC100YH1-003
31-50-01 09	MTC100YH1-003
31-50-01 14	MTC100YH1-003
DA26-P	
31-50-01 09	MTC100YC1-005

IDENT CH-SECT-UNIT-FIG	PART NUMBER
DA26-P	
31-50-01 14	MTC100YC1-005
31-50-01 09	MTC100YH1-003
31-50-01 14	MTC100YH1-003
DA26-R	
31-50-01 04	MTC100KT1-1103
31-50-01 07	MTC100KT1-1103
31-50-01 08	MTC100KT1-1103
31-50-01 09	MTC100KT1-1103
31-50-01 14	MTC100KT1-1103
31-50-01 04	MTC100KT1-1104
31-50-01 07	MTC100KT1-1104
31-50-01 08	MTC100KT1-1104
31-50-01 09	MTC100KT1-1104
31-50-01 14	MTC100KT1-1104
31-50-01 04	MTC100YH1-004
31-50-01 07	MTC100YH1-004
31-50-01 08	MTC100YH1-004
31-50-01 09	MTC100YH1-004
31-50-01 14	MTC100YH1-004
DA26-R	
31-50-01 09	MTC100YC1-006
31-50-01 14	MTC100YC1-006
31-50-01 09	MTC100YH1-004
31-50-01 14	MTC100YH1-004
DA27-P	
31-50-01 04	MTC100KT1-1101
31-50-01 07	MTC100KT1-1101
31-50-01 08	MTC100KT1-1101
31-50-01 09	MTC100KT1-1101
31-50-01 14	MTC100KT1-1101
31-50-01 04	MTC100KT1-1102
31-50-01 07	MTC100KT1-1102
31-50-01 08	MTC100KT1-1102
31-50-01 09	MTC100KT1-1102
31-50-01 14	MTC100KT1-1102
31-50-01 04	MTC100YH1-003
31-50-01 07	MTC100YH1-003
31-50-01 08	MTC100YH1-003
31-50-01 09	MTC100YH1-003
31-50-01 14	MTC100YH1-003
DA27-P	
31-50-01 09	MTC100YC1-005
31-50-01 14	MTC100YC1-005
31-50-01 09	MTC100YH1-003
31-50-01 14	MTC100YH1-003
DA27-R	
31-50-01 04	MTC100KT1-1103
31-50-01 07	MTC100KT1-1103
31-50-01 08	MTC100KT1-1103
31-50-01 09	MTC100KT1-1103

IDENT CH-SECT-UNIT-FIG	PART NUMBER
DA27-R	
31-50-01 14	MTC100KT1-1103
31-50-01 04	MTC100KT1-1104
31-50-01 07	MTC100KT1-1104
31-50-01 08	MTC100KT1-1104
31-50-01 09	MTC100KT1-1104
31-50-01 14	MTC100KT1-1104
31-50-01 04	MTC100YH1-004
31-50-01 07	MTC100YH1-004
31-50-01 08	MTC100YH1-004
31-50-01 09	MTC100YH1-004
31-50-01 14	MTC100YH1-004
DA27-R	
31-50-01 09	MTC100YC1-006
31-50-01 14	MTC100YC1-006
31-50-01 09	MTC100YH1-004
31-50-01 14	MTC100YH1-004
DA28-P	
29-32-10 05	MTC100KTI-1102
26-10-10 03	MTC100KT1-1101
29-32-10 05	MTC100KT1-1101
30-20-10 02	MTC100KT1-1101
32-60-30 02	MTC100KT1-1101
32-60-30 03	MTC100KT1-1101
33-30-05 07	MTC100KT1-1101
33-30-05 08	MTC100KT1-1101
26-10-10 03	MTC100KT1-1102
30-20-10 02	MTC100KT1-1102
32-60-30 02	MTC100KT1-1102
32-60-30 03	MTC100KT1-1102
33-30-05 07	MTC100KT1-1102
33-30-05 08	MTC100KT1-1102
31-20-35 02	MTC100KT2-1101
31-20-35 03	MTC100KT2-1101
31-20-35 02	MTC100KT2-1102
31-20-35 03	MTC100KT2-1102
26-10-10 03	MTC100YH1-003
29-32-10 05	MTC100YH1-003
30-20-10 02	MTC100YH1-003
31-20-35 02	MTC100YH1-003
31-20-35 03	MTC100YH1-003
32-60-30 02	MTC100YH1-003
32-60-30 03	MTC100YH1-003
33-30-05 07	MTC100YH1-003
33-30-05 08	MTC100YH1-003
DA28-P	
26-10-10 03	MTC100YC1-005
29-32-10 05	MTC100YC1-005
30-20-10 02	MTC100YC1-005
31-20-35 03	MTC100YC1-005
32-60-30 03	MTC100YC1-005

IDENT CH-SECT-UNIT-FIG	PART NUMBER
DA28-P	
33-30-05 08	MTC100YC1-005
26-10-10 03	MTC100YH1-003
29-32-10 05	MTC100YH1-003
30-20-10 02	MTC100YH1-003
31-20-35 03	MTC100YH1-003
32-60-30 03	MTC100YH1-003
33-30-05 08	MTC100YH1-003
DA28-R	
26-10-10 03	MTC100KT1-1103
29-32-10 05	MTC100KT1-1103
30-20-10 02	MTC100KT1-1103
32-60-30 02	MTC100KT1-1103
32-60-30 03	MTC100KT1-1103
33-30-05 07	MTC100KT1-1103
33-30-05 08	MTC100KT1-1103
26-10-10 03	MTC100KT1-1104
29-32-10 05	MTC100KT1-1104
30-20-10 02	MTC100KT1-1104
32-60-30 02	MTC100KT1-1104
32-60-30 03	MTC100KT1-1104
33-30-05 07	MTC100KT1-1104
33-30-05 08	MTC100KT1-1104
31-20-35 02	MTC100KT2-1103
31-20-35 02	MTC100KT2-1104
31-20-35 03	MTC100KT2-1104
26-10-10 03	MTC100YH1-004
29-32-10 05	MTC100YH1-004
30-20-10 02	MTC100YH1-004
31-20-35 02	MTC100YH1-004
31-20-35 03	MTC100YH1-004
32-60-30 02	MTC100YH1-004
32-60-30 03	MTC100YH1-004
33-30-05 07	MTC100YH1-004
33-30-05 08	MTC100YH1-004
DA28-R	
26-10-10 03	MTC100YC1-006
29-32-10 05	MTC100YC1-006
30-20-10 02	MTC100YC1-006
31-20-35 03	MTC100YC1-006
32-60-30 03	MTC100YC1-006
33-30-05 08	MTC100YC1-006
26-10-10 03	MTC100YH1-004
29-32-10 05	MTC100YH1-004
30-20-10 02	MTC100YH1-004
31-20-35 03	MTC100YH1-004
32-60-30 03	MTC100YH1-004
33-30-05 08	MTC100YH1-004
DA29-P	
29-32-10 05	MTC100KTI-1102
32-60-10 04	MTC100KTI-1102

IDENT CH-SECT-UNIT-FIG	PART NUMBER
DA29-P	
21-30-10 02	MTC100KT1-1101
21-30-10 04	MTC100KT1-1101
24-50-01 05	MTC100KT1-1101
24-50-01 06	MTC100KT1-1101
24-50-01 07	MTC100KT1-1101
26-10-10 03	MTC100KT1-1101
29-32-10 05	MTC100KT1-1101
30-20-10 02	MTC100KT1-1101
32-60-10 04	MTC100KT1-1101
21-30-10 02	MTC100KT1-1102
21-30-10 04	MTC100KT1-1102
24-50-01 05	MTC100KT1-1102
24-50-01 06	MTC100KT1-1102
24-50-01 07	MTC100KT1-1102
26-10-10 03	MTC100KT1-1102
30-20-10 02	MTC100KT1-1102
21-30-10 02	MTC100YH1-003
21-30-10 04	MTC100YH1-003
24-50-01 05	MTC100YH1-003
24-50-01 06	MTC100YH1-003
24-50-01 07	MTC100YH1-003
26-10-10 03	MTC100YH1-003
29-32-10 05	MTC100YH1-003
30-20-10 02	MTC100YH1-003
32-60-10 04	MTC100YH1-003
DA29-P	
21-30-10 04	MTC100YC1-005
24-50-01 06	MTC100YC1-005
24-50-01 07	MTC100YC1-005
26-10-10 03	MTC100YC1-005
29-32-10 05	MTC100YC1-005
30-20-10 02	MTC100YC1-005
32-60-10 04	MTC100YC1-005
21-30-10 04	MTC100YH1-003
24-50-01 06	MTC100YH1-003
24-50-01 07	MTC100YH1-003
26-10-10 03	MTC100YH1-003
29-32-10 05	MTC100YH1-003
30-20-10 02	MTC100YH1-003
32-60-10 04	MTC100YH1-003
DA29-R	
21-30-10 02	MTC100KT1-1103
21-30-10 04	MTC100KT1-1103
24-50-01 05	MTC100KT1-1103
24-50-01 06	MTC100KT1-1103
24-50-01 07	MTC100KT1-1103
26-10-10 03	MTC100KT1-1103
29-32-10 05	MTC100KT1-1103
30-20-10 02	MTC100KT1-1103
32-60-10 04	MTC100KT1-1103

IDENT CH-SECT-UNIT-FIG	PART NUMBER
DA29-R	
21-30-10 02	MTC100KT1-1104
24-50-01 05	MTC100KT1-1104
24-50-01 06	MTC100KT1-1104
24-50-01 07	MTC100KT1-1104
26-10-10 03	MTC100KT1-1104
29-32-10 05	MTC100KT1-1104
30-20-10 02	MTC100KT1-1104
32-60-10 04	MTC100KT1-1104
21-30-10 02	MTC100YH1-004
21-30-10 04	MTC100YH1-004
24-50-01 05	MTC100YH1-004
24-50-01 06	MTC100YH1-004
24-50-01 07	MTC100YH1-004
26-10-10 03	MTC100YH1-004
29-32-10 05	MTC100YH1-004
30-20-10 02	MTC100YH1-004
32-60-10 04	MTC100YH1-004
21-30-10 04	1104
DA29-R	
21-30-10 04	MTC100YC1-006
24-50-01 06	MTC100YC1-006
24-50-01 07	MTC100YC1-006
26-10-10 03	MTC100YC1-006
29-32-10 05	MTC100YC1-006
30-20-10 02	MTC100YC1-006
32-60-10 04	MTC100YC1-006
21-30-10 04	MTC100YH1-004
24-50-01 06	MTC100YH1-004
24-50-01 07	MTC100YH1-004
26-10-10 03	MTC100YH1-004
29-32-10 05	MTC100YH1-004
30-20-10 02	MTC100YH1-004
32-60-10 04	MTC100YH1-004
DA3-P	
30-30-20 02	MTC100KTI-1102
32-60-10 04	MTC100KTI-1102
24-21-17 03	MTC100KT1-1101
24-21-17 04	MTC100KT1-1101
24-30-10 02	MTC100KT1-1101
24-50-01 05	MTC100KT1-1101
24-50-01 06	MTC100KT1-1101
24-50-01 07	MTC100KT1-1101
27-61-10 03	MTC100KT1-1101
27-61-10 04	MTC100KT1-1101
30-30-20 02	MTC100KT1-1101
32-60-10 04	MTC100KT1-1101
73-20-10 03	MTC100KT1-1101
24-21-17 03	MTC100KT1-1102
24-21-17 04	MTC100KT1-1102
24-30-10 02	MTC100KT1-1102

IDENT CH-SECT-UNIT-FIG	PART NUMBER
DA3-P	
24-50-01 05	MTC100KT1-1102
24-50-01 06	MTC100KT1-1102
24-50-01 07	MTC100KT1-1102
27-61-10 03	MTC100KT1-1102
27-61-10 04	MTC100KT1-1102
73-20-10 03	MTC100KT1-1102
27-61-10 08	MTC100YC1-005
24-21-17 03	MTC100YH1-003
24-21-17 04	MTC100YH1-003
24-30-10 02	MTC100YH1-003
24-50-01 05	MTC100YH1-003
24-50-01 06	MTC100YH1-003
24-50-01 07	MTC100YH1-003
27-61-10 03	MTC100YH1-003
27-61-10 04	MTC100YH1-003
27-61-10 08	MTC100YH1-003
30-30-20 02	MTC100YH1-003
32-60-10 04	MTC100YH1-003
73-20-10 03	MTC100YH1-003
DA3-P	
24-21-17 04	MTC100YC1-005
24-30-10 02	MTC100YC1-005
24-50-01 06	MTC100YC1-005
24-50-01 07	MTC100YC1-005
27-61-10 04	MTC100YC1-005
30-30-20 02	MTC100YC1-005
32-60-10 04	MTC100YC1-005
73-20-10 03	MTC100YC1-005
24-21-17 04	MTC100YH1-003
24-30-10 02	MTC100YH1-003
24-50-01 06	MTC100YH1-003
24-50-01 07	MTC100YH1-003
27-61-10 04	MTC100YH1-003
30-30-20 02	MTC100YH1-003
32-60-10 04	MTC100YH1-003
73-20-10 03	MTC100YH1-003
DA3-R	
24-21-17 03	MTC100KT1-1103
24-21-17 04	MTC100KT1-1103
24-30-10 02	MTC100KT1-1103
24-50-01 05	MTC100KT1-1103
24-50-01 06	MTC100KT1-1103
24-50-01 07	MTC100KT1-1103
27-61-10 03	MTC100KT1-1103
27-61-10 04	MTC100KT1-1103
30-30-20 02	MTC100KT1-1103
32-60-10 04	MTC100KT1-1103
73-20-10 03	MTC100KT1-1103
24-21-17 03	MTC100KT1-1104
24-21-17 04	MTC100KT1-1104

IDENT CH-SECT-UNIT-FIG	PART NUMBER
DA3-R	
24-30-10 02	MTC100KT1-1104
24-50-01 05	MTC100KT1-1104
24-50-01 06	MTC100KT1-1104
24-50-01 07	MTC100KT1-1104
27-61-10 03	MTC100KT1-1104
27-61-10 04	MTC100KT1-1104
30-30-20 02	MTC100KT1-1104
32-60-10 04	MTC100KT1-1104
73-20-10 03	MTC100KT1-1104
27-61-10 08	MTC100YC1-006
24-21-17 03	MTC100YH1-004
24-21-17 04	MTC100YH1-004
24-30-10 02	MTC100YH1-004
24-50-01 05	MTC100YH1-004
24-50-01 06	MTC100YH1-004
24-50-01 07	MTC100YH1-004
27-61-10 03	MTC100YH1-004
27-61-10 04	MTC100YH1-004
27-61-10 08	MTC100YH1-004
30-30-20 02	MTC100YH1-004
32-60-10 04	MTC100YH1-004
73-20-10 03	MTC100YH1-004
DA3-R	
24-21-17 04	MTC100YC1-006
24-30-10 02	MTC100YC1-006
24-50-01 06	MTC100YC1-006
24-50-01 07	MTC100YC1-006
27-61-10 04	MTC100YC1-006
30-30-20 02	MTC100YC1-006
32-60-10 04	MTC100YC1-006
73-20-10 03	MTC100YC1-006
24-21-17 04	MTC100YH1-004
24-30-10 02	MTC100YH1-004
24-50-01 06	MTC100YH1-004
24-50-01 07	MTC100YH1-004
27-61-10 04	MTC100YH1-004
30-30-20 02	MTC100YH1-004
32-60-10 04	MTC100YH1-004
73-20-10 03	MTC100YH1-004
DA30-P	
31-50-01 04	MTCX1X100-100
31-50-01 07	MTCX1X100-100
31-50-01 08	MTCX1X100-100
31-50-01 09	MTCX1X100-100
31-50-01 14	MTCX1X100-100
31-50-01 04	MTC100KT1-1101
31-50-01 07	MTC100KT1-1101
31-50-01 08	MTC100KT1-1101
31-50-01 09	MTC100KT1-1101
31-50-01 14	MTC100KT1-1101

IDENT CH-SECT-UNIT-FIG	PART NUMBER
DA30-P	
31-50-01 04	MTC100YH1-003
31-50-01 07	MTC100YH1-003
31-50-01 08	MTC100YH1-003
31-50-01 09	MTC100YH1-003
31-50-01 14	MTC100YH1-003
DA30-P	
31-50-01 09	MTC100YC1-005
31-50-01 14	MTC100YC1-005
31-50-01 09	MTC100YH1-003
31-50-01 14	MTC100YH1-003
DA30-R	
31-50-01 04	MTCX1X100-100
31-50-01 07	MTCX1X100-100
31-50-01 08	MTCX1X100-100
31-50-01 09	MTCX1X100-100
31-50-01 14	MTCX1X100-100
31-50-01 04	MTC100KT1-1103
31-50-01 07	MTC100KT1-1103
31-50-01 08	MTC100KT1-1103
31-50-01 09	MTC100KT1-1103
31-50-01 14	MTC100KT1-1103
31-50-01 04	MTC100YH1-004
31-50-01 07	MTC100YH1-004
31-50-01 08	MTC100YH1-004
31-50-01 09	MTC100YH1-004
31-50-01 14	MTC100YH1-004
DA30-R	
31-50-01 09	MTC100YC1-006
31-50-01 14	MTC100YC1-006
31-50-01 09	MTC100YH1-004
31-50-01 14	MTC100YH1-004
DA31-P	
21-31-10 07	MTC100KT2-1101
26-10-10 03	MTC100KT2-1101
27-33-00 05	MTC100KT2-1101
27-33-00 07	MTC100KT2-1101
28-40-10 04	MTC100KT2-1101
28-40-10 05	MTC100KT2-1101
30-40-15 07	MTC100KT2-1101
30-40-15 10	MTC100KT2-1101
30-40-15 11	MTC100KT2-1101
30-40-15 12	MTC100KT2-1101
30-40-20 03	MTC100KT2-1101
30-40-20 05	MTC100KT2-1101
31-20-60 02	MTC100KT2-1101
31-50-01 04	MTC100KT2-1101
31-50-01 07	MTC100KT2-1101
31-50-01 08	MTC100KT2-1101
31-50-01 09	MTC100KT2-1101
31-50-01 14	MTC100KT2-1101

IDENT CH-SECT-UNIT-FIG	PART NUMBER
DA31-P	
33-10-05 05	MTC100KT2-1101
33-10-05 07	MTC100KT2-1101
33-10-05 08	MTC100KT2-1101
33-10-05 09	MTC100KT2-1101
33-10-05 11	MTC100KT2-1101
52-70-10 02	MTC100KT2-1101
79-30-10 02	MTC100KT2-1101
21-31-10 07	MTC100KT2-1102
26-10-10 03	MTC100KT2-1102
27-33-00 05	MTC100KT2-1102
27-33-00 07	MTC100KT2-1102
28-40-10 04	MTC100KT2-1102
28-40-10 05	MTC100KT2-1102
30-40-15 07	MTC100KT2-1102
30-40-15 10	MTC100KT2-1102
30-40-15 11	MTC100KT2-1102
30-40-15 12	MTC100KT2-1102
30-40-20 03	MTC100KT2-1102
30-40-20 05	MTC100KT2-1102
31-20-60 02	MTC100KT2-1102
31-50-01 04	MTC100KT2-1102
31-50-01 07	MTC100KT2-1102
31-50-01 08	MTC100KT2-1102
31-50-01 09	MTC100KT2-1102
31-50-01 14	MTC100KT2-1102
33-10-05 05	MTC100KT2-1102
33-10-05 07	MTC100KT2-1102
33-10-05 08	MTC100KT2-1102
33-10-05 09	MTC100KT2-1102
33-10-05 11	MTC100KT2-1102
52-70-10 02	MTC100KT2-1102
79-30-10 02	MTC100KT2-1102
21-31-10 07	MTC100YH2-009
26-10-10 03	MTC100YH2-009
27-33-00 05	MTC100YH2-009
27-33-00 07	MTC100YH2-009
28-40-10 04	MTC100YH2-009
28-40-10 05	MTC100YH2-009
30-40-15 07	MTC100YH2-009
30-40-15 10	MTC100YH2-009
30-40-15 11	MTC100YH2-009
30-40-15 12	MTC100YH2-009
30-40-20 03	MTC100YH2-009
30-40-20 05	MTC100YH2-009
31-20-60 02	MTC100YH2-009
31-50-01 04	MTC100YH2-009
31-50-01 07	MTC100YH2-009
31-50-01 08	MTC100YH2-009
31-50-01 09	MTC100YH2-009
31-50-01 14	MTC100YH2-009

IDENT CH-SECT-UNIT-FIG	PART NUMBER
DA31-P	
33-10-05 05	MTC100YH2-009
33-10-05 07	MTC100YH2-009
33-10-05 08	MTC100YH2-009
33-10-05 09	MTC100YH2-009
33-10-05 11	MTC100YH2-009
52-70-10 02	MTC100YH2-009
79-30-10 02	MTC100YH2-009
DA31-P	
21-31-10 07	MTC100YC1-001
26-10-10 03	MTC100YC1-001
27-33-00 07	MTC100YC1-001
28-40-10 04	MTC100YC1-001
28-40-10 05	MTC100YC1-001
30-40-15 11	MTC100YC1-001
30-40-15 12	MTC100YC1-001
30-40-20 05	MTC100YC1-001
31-20-60 02	MTC100YC1-001
31-50-01 09	MTC100YC1-001
31-50-01 14	MTC100YC1-001
33-10-05 09	MTC100YC1-001
33-10-05 11	MTC100YC1-001
52-70-10 02	MTC100YC1-001
79-30-10 02	MTC100YC1-001
21-31-10 07	MTC100YC1-002
26-10-10 03	MTC100YC1-002
27-33-00 07	MTC100YC1-002
28-40-10 04	MTC100YC1-002
28-40-10 05	MTC100YC1-002
30-40-15 11	MTC100YC1-002
30-40-15 12	MTC100YC1-002
30-40-20 05	MTC100YC1-002
31-20-60 02	MTC100YC1-002
31-50-01 09	MTC100YC1-002
31-50-01 14	MTC100YC1-002
33-10-05 09	MTC100YC1-002
33-10-05 11	MTC100YC1-002
52-70-10 02	MTC100YC1-002
79-30-10 02	MTC100YC1-002
21-31-10 07	MTC100YH2-009
26-10-10 03	MTC100YH2-009
27-33-00 07	MTC100YH2-009
28-40-10 04	MTC100YH2-009
28-40-10 05	MTC100YH2-009
30-40-15 11	MTC100YH2-009
30-40-15 12	MTC100YH2-009
30-40-20 05	MTC100YH2-009
31-20-60 02	MTC100YH2-009
31-50-01 09	MTC100YH2-009
31-50-01 14	MTC100YH2-009
33-10-05 09	MTC100YH2-009

IDENT CH-SECT-UNIT-FIG	PART NUMBER
DA31-P	
33-10-05 11	MTC100YH2-009
52-70-10 02	MTC100YH2-009
79-30-10 02	MTC100YH2-009
DA31-R	
21-31-10 07	MTC100KT2-1103
26-10-10 03	MTC100KT2-1103
27-33-00 05	MTC100KT2-1103
27-33-00 07	MTC100KT2-1103
28-40-10 04	MTC100KT2-1103
28-40-10 05	MTC100KT2-1103
30-40-15 07	MTC100KT2-1103
30-40-15 10	MTC100KT2-1103
30-40-15 11	MTC100KT2-1103
30-40-15 12	MTC100KT2-1103
30-40-20 03	MTC100KT2-1103
30-40-20 05	MTC100KT2-1103
31-20-60 02	MTC100KT2-1103
31-50-01 04	MTC100KT2-1103
31-50-01 07	MTC100KT2-1103
31-50-01 08	MTC100KT2-1103
31-50-01 09	MTC100KT2-1103
31-50-01 14	MTC100KT2-1103
33-10-05 05	MTC100KT2-1103
33-10-05 07	MTC100KT2-1103
33-10-05 08	MTC100KT2-1103
33-10-05 09	MTC100KT2-1103
33-10-05 11	MTC100KT2-1103
52-70-10 02	MTC100KT2-1103
79-30-10 02	MTC100KT2-1103
21-31-10 07	MTC100KT2-1104
26-10-10 03	MTC100KT2-1104
27-33-00 05	MTC100KT2-1104
27-33-00 07	MTC100KT2-1104
28-40-10 04	MTC100KT2-1104
28-40-10 05	MTC100KT2-1104
30-40-15 07	MTC100KT2-1104
30-40-15 10	MTC100KT2-1104
30-40-15 11	MTC100KT2-1104
30-40-15 12	MTC100KT2-1104
30-40-20 03	MTC100KT2-1104
30-40-20 05	MTC100KT2-1104
31-20-60 02	MTC100KT2-1104
31-50-01 04	MTC100KT2-1104
31-50-01 07	MTC100KT2-1104
31-50-01 08	MTC100KT2-1104
31-50-01 09	MTC100KT2-1104
31-50-01 14	MTC100KT2-1104
33-10-05 05	MTC100KT2-1104
33-10-05 07	MTC100KT2-1104
33-10-05 08	MTC100KT2-1104

IDENT CH-SECT-UNIT-FIG	PART NUMBER
DA31-R	
33-10-05 09	MTC100KT2-1104
33-10-05 11	MTC100KT2-1104
52-70-10 02	MTC100KT2-1104
79-30-10 02	MTC100KT2-1104
21-31-10 07	MTC100YH2-010
26-10-10 03	MTC100YH2-010
27-33-00 05	MTC100YH2-010
27-33-00 07	MTC100YH2-010
28-40-10 04	MTC100YH2-010
28-40-10 05	MTC100YH2-010
30-40-15 07	MTC100YH2-010
30-40-15 10	MTC100YH2-010
30-40-15 11	MTC100YH2-010
30-40-15 12	MTC100YH2-010
30-40-20 03	MTC100YH2-010
30-40-20 05	MTC100YH2-010
31-20-60 02	MTC100YH2-010
31-50-01 04	MTC100YH2-010
31-50-01 07	MTC100YH2-010
31-50-01 08	MTC100YH2-010
31-50-01 09	MTC100YH2-010
31-50-01 14	MTC100YH2-010
33-10-05 05	MTC100YH2-010
33-10-05 07	MTC100YH2-010
33-10-05 08	MTC100YH2-010
33-10-05 09	MTC100YH2-010
33-10-05 11	MTC100YH2-010
52-70-10 02	MTC100YH2-010
79-30-10 02	MTC100YH2-010
DA31-R	
21-31-10 07	MTC100YC1-003
26-10-10 03	MTC100YC1-003
27-33-00 07	MTC100YC1-003
28-40-10 04	MTC100YC1-003
28-40-10 05	MTC100YC1-003
30-40-15 11	MTC100YC1-003
30-40-15 12	MTC100YC1-003
30-40-20 05	MTC100YC1-003
31-20-60 02	MTC100YC1-003
31-50-01 09	MTC100YC1-003
31-50-01 14	MTC100YC1-003
33-10-05 09	MTC100YC1-003
33-10-05 11	MTC100YC1-003
52-70-10 02	MTC100YC1-003
79-30-10 02	MTC100YC1-003
21-31-10 07	MTC100YC1-004
26-10-10 03	MTC100YC1-004
27-33-00 07	MTC100YC1-004
28-40-10 04	MTC100YC1-004
28-40-10 05	MTC100YC1-004

IDENT CH-SECT-UNIT-FIG	PART NUMBER
DA31-R	
30-40-15 11	MTC100YC1-004
30-40-15 12	MTC100YC1-004
30-40-20 05	MTC100YC1-004
31-20-60 02	MTC100YC1-004
31-50-01 09	MTC100YC1-004
31-50-01 14	MTC100YC1-004
33-10-05 09	MTC100YC1-004
33-10-05 11	MTC100YC1-004
52-70-10 02	MTC100YC1-004
79-30-10 02	MTC100YC1-004
21-31-10 07	MTC100YH2-010
26-10-10 03	MTC100YH2-010
27-33-00 07	MTC100YH2-010
28-40-10 04	MTC100YH2-010
28-40-10 05	MTC100YH2-010
30-40-15 11	MTC100YH2-010
30-40-15 12	MTC100YH2-010
30-40-20 05	MTC100YH2-010
31-20-60 02	MTC100YH2-010
31-50-01 09	MTC100YH2-010
31-50-01 14	MTC100YH2-010
33-10-05 09	MTC100YH2-010
33-10-05 11	MTC100YH2-010
52-70-10 02	MTC100YH2-010
79-30-10 02	MTC100YH2-010
DA32-P	
33-30-05 07	MTC100KT1-1101
33-30-05 08	MTC100KT1-1101
33-30-05 07	MTC100KT1-1102
33-30-05 08	MTC100KT1-1102
21-31-10 07	MTC100KT2-1101
27-33-00 05	MTC100KT2-1101
27-33-00 07	MTC100KT2-1101
31-20-35 02	MTC100KT2-1101
31-20-35 03	MTC100KT2-1101
33-10-05 05	MTC100KT2-1101
33-10-05 07	MTC100KT2-1101
33-10-05 08	MTC100KT2-1101
33-10-05 09	MTC100KT2-1101
33-10-05 11	MTC100KT2-1101
33-10-20 04	MTC100KT2-1101
33-10-20 07	MTC100KT2-1101
33-10-20 08	MTC100KT2-1101
21-31-10 07	MTC100KT2-1102
27-33-00 05	MTC100KT2-1102
27-33-00 07	MTC100KT2-1102
31-20-35 02	MTC100KT2-1102
31-20-35 03	MTC100KT2-1102
33-10-05 05	MTC100KT2-1102
33-10-05 07	MTC100KT2-1102

IDENT CH-SECT-UNIT-FIG	PART NUMBER
DA32-P	
33-10-05 08	MTC100KT2-1102
33-10-05 09	MTC100KT2-1102
33-10-05 11	MTC100KT2-1102
33-10-20 04	MTC100KT2-1102
33-10-20 07	MTC100KT2-1102
33-10-20 08	MTC100KT2-1102
33-30-05 07	MTC100YH1-003
33-30-05 08	MTC100YH1-003
21-31-10 07	MTC100YH2-009
27-33-00 05	MTC100YH2-009
27-33-00 07	MTC100YH2-009
31-20-35 02	MTC100YH2-009
31-20-35 03	MTC100YH2-009
33-10-05 05	MTC100YH2-009
33-10-05 07	MTC100YH2-009
33-10-05 08	MTC100YH2-009
33-10-05 09	MTC100YH2-009
33-10-05 11	MTC100YH2-009
33-10-20 04	MTC100YH2-009
33-10-20 07	MTC100YH2-009
33-10-20 08	MTC100YH2-009
DA32-P	
21-31-10 07	MTC100YC1-001
27-33-00 07	MTC100YC1-001
31-20-35 03	MTC100YC1-001
33-10-05 09	MTC100YC1-001
33-10-05 11	MTC100YC1-001
33-10-20 08	MTC100YC1-001
21-31-10 07	MTC100YC1-002
27-33-00 07	MTC100YC1-002
31-20-35 03	MTC100YC1-002
33-10-05 09	MTC100YC1-002
33-10-05 11	MTC100YC1-002
33-10-20 08	MTC100YC1-002
33-30-05 08	MTC100YC1-005
33-30-05 08	MTC100YH1-003
21-31-10 07	MTC100YH2-009
27-33-00 07	MTC100YH2-009
31-20-35 03	MTC100YH2-009
33-10-05 09	MTC100YH2-009
33-10-05 11	MTC100YH2-009
33-10-20 08	MTC100YH2-009
DA32-R	
33-30-05 07	MTC100KT1-1103
33-30-05 08	MTC100KT1-1103
33-30-05 07	MTC100KT1-1104
33-30-05 08	MTC100KT1-1104
21-31-10 07	MTC100KT2-1103
27-33-00 05	MTC100KT2-1103
27-33-00 07	MTC100KT2-1103

IDENT CH-SECT-UNIT-FIG	PART NUMBER
DA32-R	
31-20-35 02	MTC100KT2-1103
33-10-05 05	MTC100KT2-1103
33-10-05 07	MTC100KT2-1103
33-10-05 08	MTC100KT2-1103
33-10-05 09	MTC100KT2-1103
33-10-05 11	MTC100KT2-1103
33-10-20 04	MTC100KT2-1103
33-10-20 07	MTC100KT2-1103
33-10-20 08	MTC100KT2-1103
21-31-10 07	MTC100KT2-1104
27-33-00 05	MTC100KT2-1104
27-33-00 07	MTC100KT2-1104
31-20-35 02	MTC100KT2-1104
31-20-35 03	MTC100KT2-1104
33-10-05 05	MTC100KT2-1104
33-10-05 07	MTC100KT2-1104
33-10-05 08	MTC100KT2-1104
33-10-05 09	MTC100KT2-1104
33-10-05 11	MTC100KT2-1104
33-10-20 04	MTC100KT2-1104
33-10-20 07	MTC100KT2-1104
33-10-20 08	MTC100KT2-1104
33-30-05 07	MTC100YH1-004
33-30-05 08	MTC100YH1-004
21-31-10 07	MTC100YH2-010
27-33-00 05	MTC100YH2-010
27-33-00 07	MTC100YH2-010
31-20-35 02	MTC100YH2-010
31-20-35 03	MTC100YH2-010
33-10-05 05	MTC100YH2-010
33-10-05 07	MTC100YH2-010
33-10-05 08	MTC100YH2-010
33-10-05 09	MTC100YH2-010
33-10-05 11	MTC100YH2-010
33-10-20 04	MTC100YH2-010
33-10-20 07	MTC100YH2-010
33-10-20 08	MTC100YH2-010
DA32-R	
21-31-10 07	MTC100YC1-003
27-33-00 07	MTC100YC1-003
31-20-35 03	MTC100YC1-003
33-10-05 09	MTC100YC1-003
33-10-05 11	MTC100YC1-003
33-10-20 08	MTC100YC1-003
21-31-10 07	MTC100YC1-004
27-33-00 07	MTC100YC1-004
31-20-35 03	MTC100YC1-004
33-10-05 09	MTC100YC1-004
33-10-05 11	MTC100YC1-004
33-10-20 08	MTC100YC1-004

IDENT CH-SECT-UNIT-FIG	PART NUMBER
DA32-R	
33-30-05 08	MTC100YC1-006
33-30-05 08	MTC100YH1-004
21-31-10 07	MTC100YH2-010
27-33-00 07	MTC100YH2-010
31-20-35 03	MTC100YH2-010
33-10-05 09	MTC100YH2-010
33-10-05 11	MTC100YH2-010
33-10-20 08	MTC100YH2-010
DA33-P	
21-31-10 07	MTC100KT2-1101
26-10-20 02	MTC100KT2-1101
27-33-00 05	MTC100KT2-1101
27-33-00 07	MTC100KT2-1101
27-61-20 04	MTC100KT2-1101
28-40-10 04	MTC100KT2-1101
28-40-10 05	MTC100KT2-1101
29-31-10 02	MTC100KT2-1101
31-20-35 02	MTC100KT2-1101
31-20-35 03	MTC100KT2-1101
31-20-60 02	MTC100KT2-1101
31-50-01 04	MTC100KT2-1101
31-50-01 07	MTC100KT2-1101
31-50-01 08	MTC100KT2-1101
31-50-01 09	MTC100KT2-1101
31-50-01 14	MTC100KT2-1101
32-60-10 04	MTC100KT2-1101
79-30-10 02	MTC100KT2-1101
21-31-10 07	MTC100KT2-1102
26-10-20 02	MTC100KT2-1102
27-33-00 05	MTC100KT2-1102
27-33-00 07	MTC100KT2-1102
27-61-20 04	MTC100KT2-1102
28-40-10 04	MTC100KT2-1102
28-40-10 05	MTC100KT2-1102
29-31-10 02	MTC100KT2-1102
31-20-35 02	MTC100KT2-1102
31-20-35 03	MTC100KT2-1102
31-20-60 02	MTC100KT2-1102
31-50-01 04	MTC100KT2-1102
31-50-01 07	MTC100KT2-1102
31-50-01 08	MTC100KT2-1102
31-50-01 09	MTC100KT2-1102
31-50-01 14	MTC100KT2-1102
32-60-10 04	MTC100KT2-1102
79-30-10 02	MTC100KT2-1102
21-31-10 07	MTC100YH2-009
26-10-20 02	MTC100YH2-009
27-33-00 05	MTC100YH2-009
27-33-00 07	MTC100YH2-009
27-61-20 04	MTC100YH2-009

IDENT CH-SECT-UNIT-FIG	PART NUMBER
DA33-P	
28-40-10 04	MTC100YH2-009
28-40-10 05	MTC100YH2-009
29-31-10 02	MTC100YH2-009
31-20-35 02	MTC100YH2-009
31-20-35 03	MTC100YH2-009
31-20-60 02	MTC100YH2-009
31-50-01 04	MTC100YH2-009
31-50-01 07	MTC100YH2-009
31-50-01 08	MTC100YH2-009
31-50-01 09	MTC100YH2-009
31-50-01 14	MTC100YH2-009
32-60-10 04	MTC100YH2-009
79-30-10 02	MTC100YH2-009
DA33-P	
21-31-10 07	MTC100YC1-001
26-10-20 02	MTC100YC1-001
27-33-00 07	MTC100YC1-001
28-40-10 04	MTC100YC1-001
28-40-10 05	MTC100YC1-001
29-31-10 02	MTC100YC1-001
31-20-35 03	MTC100YC1-001
31-20-60 02	MTC100YC1-001
31-50-01 09	MTC100YC1-001
31-50-01 14	MTC100YC1-001
32-60-10 04	MTC100YC1-001
79-30-10 02	MTC100YC1-001
21-31-10 07	MTC100YC1-002
26-10-20 02	MTC100YC1-002
27-33-00 07	MTC100YC1-002
28-40-10 04	MTC100YC1-002
28-40-10 05	MTC100YC1-002
29-31-10 02	MTC100YC1-002
31-20-35 03	MTC100YC1-002
31-20-60 02	MTC100YC1-002
31-50-01 09	MTC100YC1-002
31-50-01 14	MTC100YC1-002
32-60-10 04	MTC100YC1-002
79-30-10 02	MTC100YC1-002
21-31-10 07	MTC100YH2-009
26-10-20 02	MTC100YH2-009
27-33-00 07	MTC100YH2-009
28-40-10 04	MTC100YH2-009
28-40-10 05	MTC100YH2-009
29-31-10 02	MTC100YH2-009
31-20-35 03	MTC100YH2-009
31-20-60 02	MTC100YH2-009
31-50-01 09	MTC100YH2-009
31-50-01 14	MTC100YH2-009
32-60-10 04	MTC100YH2-009
79-30-10 02	MTC100YH2-009

IDENT CH-SECT-UNIT-FIG	PART NUMBER
DA33-R	
21-31-10 07	MTC100KT2-1103
26-10-20 02	MTC100KT2-1103
27-33-00 05	MTC100KT2-1103
27-33-00 07	MTC100KT2-1103
27-61-20 04	MTC100KT2-1103
28-40-10 04	MTC100KT2-1103
28-40-10 05	MTC100KT2-1103
29-31-10 02	MTC100KT2-1103
31-20-35 02	MTC100KT2-1103
31-20-60 02	MTC100KT2-1103
31-50-01 04	MTC100KT2-1103
31-50-01 07	MTC100KT2-1103
31-50-01 08	MTC100KT2-1103
31-50-01 09	MTC100KT2-1103
31-50-01 14	MTC100KT2-1103
32-60-10 04	MTC100KT2-1103
79-30-10 02	MTC100KT2-1103
21-31-10 07	MTC100KT2-1104
26-10-20 02	MTC100KT2-1104
27-33-00 05	MTC100KT2-1104
27-33-00 07	MTC100KT2-1104
27-61-20 04	MTC100KT2-1104
28-40-10 04	MTC100KT2-1104
28-40-10 05	MTC100KT2-1104
29-31-10 02	MTC100KT2-1104
31-20-35 02	MTC100KT2-1104
31-20-35 03	MTC100KT2-1104
31-20-60 02	MTC100KT2-1104
31-50-01 04	MTC100KT2-1104
31-50-01 07	MTC100KT2-1104
31-50-01 08	MTC100KT2-1104
31-50-01 09	MTC100KT2-1104
31-50-01 14	MTC100KT2-1104
32-60-10 04	MTC100KT2-1104
79-30-10 02	MTC100KT2-1104
21-31-10 07	MTC100YH2-010
26-10-20 02	MTC100YH2-010
27-33-00 05	MTC100YH2-010
27-33-00 07	MTC100YH2-010
27-61-20 04	MTC100YH2-010
28-40-10 04	MTC100YH2-010
28-40-10 05	MTC100YH2-010
29-31-10 02	MTC100YH2-010
31-20-35 02	MTC100YH2-010
31-20-35 03	MTC100YH2-010
31-20-60 02	MTC100YH2-010
31-50-01 04	MTC100YH2-010
31-50-01 07	MTC100YH2-010
31-50-01 08	MTC100YH2-010
31-50-01 09	MTC100YH2-010

IDENT CH-SECT-UNIT-FIG	PART NUMBER
DA33-R	
31-50-01 14	MTC100YH2-010
32-60-10 04	MTC100YH2-010
79-30-10 02	MTC100YH2-010
DA33-R	
21-31-10 07	MTC100YC1-003
26-10-20 02	MTC100YC1-003
27-33-00 07	MTC100YC1-003
28-40-10 04	MTC100YC1-003
28-40-10 05	MTC100YC1-003
29-31-10 02	MTC100YC1-003
31-20-35 03	MTC100YC1-003
31-20-60 02	MTC100YC1-003
31-50-01 09	MTC100YC1-003
31-50-01 14	MTC100YC1-003
32-60-10 04	MTC100YC1-003
79-30-10 02	MTC100YC1-003
21-31-10 07	MTC100YC1-004
26-10-20 02	MTC100YC1-004
27-33-00 07	MTC100YC1-004
28-40-10 04	MTC100YC1-004
28-40-10 05	MTC100YC1-004
29-31-10 02	MTC100YC1-004
31-20-35 03	MTC100YC1-004
31-20-60 02	MTC100YC1-004
31-50-01 09	MTC100YC1-004
31-50-01 14	MTC100YC1-004
32-60-10 04	MTC100YC1-004
79-30-10 02	MTC100YC1-004
21-31-10 07	MTC100YH2-010
26-10-20 02	MTC100YH2-010
27-33-00 07	MTC100YH2-010
28-40-10 04	MTC100YH2-010
28-40-10 05	MTC100YH2-010
29-31-10 02	MTC100YH2-010
31-20-35 03	MTC100YH2-010
31-20-60 02	MTC100YH2-010
31-50-01 09	MTC100YH2-010
31-50-01 14	MTC100YH2-010
32-60-10 04	MTC100YH2-010
79-30-10 02	MTC100YH2-010
DA35-P	
21-31-10 07	MTC100KT2-1101
21-60-10 08	MTC100KT2-1101
21-60-10 10	MTC100KT2-1101
21-60-10 11	MTC100KT2-1101
27-24-10 02	MTC100KT2-1101
27-24-10 03	MTC100KT2-1101
27-33-00 05	MTC100KT2-1101
27-33-00 07	MTC100KT2-1101
27-50-10 02	MTC100KT2-1101

IDENT CH-SECT-UNIT-FIG	PART NUMBER
DA35-P	
27-61-10 03	MTC100KT2-1101
27-61-10 04	MTC100KT2-1101
28-42-10 02	MTC100KT2-1101
30-30-20 02	MTC100KT2-1101
30-40-15 07	MTC100KT2-1101
30-40-15 10	MTC100KT2-1101
30-40-15 11	MTC100KT2-1101
30-40-15 12	MTC100KT2-1101
30-40-20 03	MTC100KT2-1101
30-40-20 05	MTC100KT2-1101
30-80-10 02	MTC100KT2-1101
30-80-10 03	MTC100KT2-1101
31-20-35 02	MTC100KT2-1101
31-20-35 03	MTC100KT2-1101
31-20-60 02	MTC100KT2-1101
32-60-10 04	MTC100KT2-1101
32-60-20 02	MTC100KT2-1101
21-31-10 07	MTC100KT2-1102
21-60-10 08	MTC100KT2-1102
21-60-10 10	MTC100KT2-1102
21-60-10 11	MTC100KT2-1102
27-24-10 02	MTC100KT2-1102
27-24-10 03	MTC100KT2-1102
27-33-00 05	MTC100KT2-1102
27-33-00 07	MTC100KT2-1102
27-50-10 02	MTC100KT2-1102
27-61-10 03	MTC100KT2-1102
27-61-10 04	MTC100KT2-1102
28-42-10 02	MTC100KT2-1102
30-30-20 02	MTC100KT2-1102
30-40-15 07	MTC100KT2-1102
30-40-15 10	MTC100KT2-1102
30-40-15 11	MTC100KT2-1102
30-40-15 12	MTC100KT2-1102
30-40-20 03	MTC100KT2-1102
30-40-20 05	MTC100KT2-1102
30-80-10 02	MTC100KT2-1102
30-80-10 03	MTC100KT2-1102
31-20-35 02	MTC100KT2-1102
31-20-35 03	MTC100KT2-1102
31-20-60 02	MTC100KT2-1102
32-60-10 04	MTC100KT2-1102
32-60-20 02	MTC100KT2-1102
27-61-10 08	MTC100YC1-001
27-61-10 08	MTC100YC1-002
21-31-10 07	MTC100YH2-009
21-60-10 08	MTC100YH2-009
21-60-10 10	MTC100YH2-009
21-60-10 11	MTC100YH2-009
27-24-10 02	MTC100YH2-009

IDENT CH-SECT-UNIT-FIG	PART NUMBER
DA35-P	
27-24-10 03	MTC100YH2-009
27-33-00 05	MTC100YH2-009
27-33-00 07	MTC100YH2-009
27-50-10 02	MTC100YH2-009
27-61-10 03	MTC100YH2-009
27-61-10 04	MTC100YH2-009
27-61-10 08	MTC100YH2-009
28-42-10 02	MTC100YH2-009
30-30-20 02	MTC100YH2-009
30-40-15 07	MTC100YH2-009
30-40-15 10	MTC100YH2-009
30-40-15 11	MTC100YH2-009
30-40-15 12	MTC100YH2-009
30-40-20 03	MTC100YH2-009
30-40-20 05	MTC100YH2-009
30-80-10 02	MTC100YH2-009
30-80-10 03	MTC100YH2-009
31-20-35 02	MTC100YH2-009
31-20-35 03	MTC100YH2-009
31-20-60 02	MTC100YH2-009
32-60-10 04	MTC100YH2-009
32-60-20 02	MTC100YH2-009
DA35-P	
21-31-10 07	MTC100YC1-001
21-60-10 11	MTC100YC1-001
27-24-10 03	MTC100YC1-001
27-33-00 07	MTC100YC1-001
27-50-10 02	MTC100YC1-001
27-61-10 04	MTC100YC1-001
28-42-10 02	MTC100YC1-001
30-30-20 02	MTC100YC1-001
30-40-15 11	MTC100YC1-001
30-40-15 12	MTC100YC1-001
30-40-20 05	MTC100YC1-001
30-80-10 03	MTC100YC1-001
31-20-35 03	MTC100YC1-001
31-20-60 02	MTC100YC1-001
32-60-10 04	MTC100YC1-001
32-60-20 02	MTC100YC1-001
21-31-10 07	MTC100YC1-002
21-60-10 11	MTC100YC1-002
27-24-10 03	MTC100YC1-002
27-33-00 07	MTC100YC1-002
27-50-10 02	MTC100YC1-002
27-61-10 04	MTC100YC1-002
28-42-10 02	MTC100YC1-002
30-30-20 02	MTC100YC1-002
30-40-15 11	MTC100YC1-002
30-40-15 12	MTC100YC1-002
30-40-20 05	MTC100YC1-002

IDENT CH-SECT-UNIT-FIG	PART NUMBER
DA35-P	
30-80-10 03	MTC100YC1-002
31-20-35 03	MTC100YC1-002
31-20-60 02	MTC100YC1-002
32-60-10 04	MTC100YC1-002
32-60-20 02	MTC100YC1-002
21-31-10 07	MTC100YH2-009
21-60-10 11	MTC100YH2-009
27-24-10 03	MTC100YH2-009
27-33-00 07	MTC100YH2-009
27-50-10 02	MTC100YH2-009
27-61-10 04	MTC100YH2-009
28-42-10 02	MTC100YH2-009
30-30-20 02	MTC100YH2-009
30-40-15 11	MTC100YH2-009
30-40-15 12	MTC100YH2-009
30-40-20 05	MTC100YH2-009
30-80-10 03	MTC100YH2-009
31-20-35 03	MTC100YH2-009
31-20-60 02	MTC100YH2-009
32-60-10 04	MTC100YH2-009
32-60-20 02	MTC100YH2-009
DA35-R	
21-31-10 07	MTC100KT2-1103
21-60-10 08	MTC100KT2-1103
21-60-10 10	MTC100KT2-1103
21-60-10 11	MTC100KT2-1103
27-24-10 02	MTC100KT2-1103
27-24-10 03	MTC100KT2-1103
27-33-00 05	MTC100KT2-1103
27-33-00 07	MTC100KT2-1103
27-50-10 02	MTC100KT2-1103
27-61-10 03	MTC100KT2-1103
27-61-10 04	MTC100KT2-1103
28-42-10 02	MTC100KT2-1103
30-30-20 02	MTC100KT2-1103
30-40-15 07	MTC100KT2-1103
30-40-15 10	MTC100KT2-1103
30-40-15 11	MTC100KT2-1103
30-40-15 12	MTC100KT2-1103
30-40-20 03	MTC100KT2-1103
30-40-20 05	MTC100KT2-1103
30-80-10 02	MTC100KT2-1103
30-80-10 03	MTC100KT2-1103
31-20-35 02	MTC100KT2-1103
31-20-60 02	MTC100KT2-1103
32-60-10 04	MTC100KT2-1103
32-60-20 02	MTC100KT2-1103
21-31-10 07	MTC100KT2-1104
21-60-10 08	MTC100KT2-1104
21-60-10 10	MTC100KT2-1104

IDENT CH-SECT-UNIT-FIG	PART NUMBER
DA35-R	
21-60-10 11	MTC100KT2-1104
27-24-10 02	MTC100KT2-1104
27-24-10 03	MTC100KT2-1104
27-33-00 05	MTC100KT2-1104
27-33-00 07	MTC100KT2-1104
27-50-10 02	MTC100KT2-1104
27-61-10 03	MTC100KT2-1104
27-61-10 04	MTC100KT2-1104
28-42-10 02	MTC100KT2-1104
30-30-20 02	MTC100KT2-1104
30-40-15 07	MTC100KT2-1104
30-40-15 10	MTC100KT2-1104
30-40-15 11	MTC100KT2-1104
30-40-15 12	MTC100KT2-1104
30-40-20 03	MTC100KT2-1104
30-40-20 05	MTC100KT2-1104
30-80-10 02	MTC100KT2-1104
30-80-10 03	MTC100KT2-1104
31-20-35 02	MTC100KT2-1104
31-20-35 03	MTC100KT2-1104
31-20-60 02	MTC100KT2-1104
32-60-10 04	MTC100KT2-1104
32-60-20 02	MTC100KT2-1104
27-61-10 08	MTC100YC1-003
27-61-10 08	MTC100YC1-004
21-31-10 07	MTC100YH2-010
21-60-10 08	MTC100YH2-010
21-60-10 10	MTC100YH2-010
21-60-10 11	MTC100YH2-010
27-24-10 02	MTC100YH2-010
27-24-10 03	MTC100YH2-010
27-33-00 05	MTC100YH2-010
27-33-00 07	MTC100YH2-010
27-50-10 02	MTC100YH2-010
27-61-10 03	MTC100YH2-010
27-61-10 04	MTC100YH2-010
27-61-10 08	MTC100YH2-010
28-42-10 02	MTC100YH2-010
30-30-20 02	MTC100YH2-010
30-40-15 07	MTC100YH2-010
30-40-15 10	MTC100YH2-010
30-40-15 11	MTC100YH2-010
30-40-15 12	MTC100YH2-010
30-40-20 03	MTC100YH2-010
30-40-20 05	MTC100YH2-010
30-80-10 02	MTC100YH2-010
30-80-10 03	MTC100YH2-010
31-20-35 02	MTC100YH2-010
31-20-35 03	MTC100YH2-010
31-20-60 02	MTC100YH2-010

IDENT CH-SECT-UNIT-FIG	PART NUMBER
DA35-R	
32-60-10 04	MTC100YH2-010
32-60-20 02	MTC100YH2-010
DA35-R	
21-31-10 07	MTC100YC1-003
21-60-10 11	MTC100YC1-003
27-24-10 03	MTC100YC1-003
27-33-00 07	MTC100YC1-003
27-50-10 02	MTC100YC1-003
27-61-10 04	MTC100YC1-003
28-42-10 02	MTC100YC1-003
30-30-20 02	MTC100YC1-003
30-40-15 11	MTC100YC1-003
30-40-15 12	MTC100YC1-003
30-40-20 05	MTC100YC1-003
30-80-10 03	MTC100YC1-003
31-20-35 03	MTC100YC1-003
31-20-60 02	MTC100YC1-003
32-60-10 04	MTC100YC1-003
32-60-20 02	MTC100YC1-003
21-31-10 07	MTC100YC1-004
21-60-10 11	MTC100YC1-004
27-24-10 03	MTC100YC1-004
27-33-00 07	MTC100YC1-004
27-50-10 02	MTC100YC1-004
27-61-10 04	MTC100YC1-004
28-42-10 02	MTC100YC1-004
30-30-20 02	MTC100YC1-004
30-40-15 11	MTC100YC1-004
30-40-15 12	MTC100YC1-004
30-40-20 05	MTC100YC1-004
30-80-10 03	MTC100YC1-004
31-20-35 03	MTC100YC1-004
31-20-60 02	MTC100YC1-004
32-60-10 04	MTC100YC1-004
32-60-20 02	MTC100YC1-004
21-31-10 07	MTC100YH2-010
21-60-10 11	MTC100YH2-010
27-24-10 03	MTC100YH2-010
27-33-00 07	MTC100YH2-010
27-50-10 02	MTC100YH2-010
27-61-10 04	MTC100YH2-010
28-42-10 02	MTC100YH2-010
30-30-20 02	MTC100YH2-010
30-40-15 11	MTC100YH2-010
30-40-15 12	MTC100YH2-010
30-40-20 05	MTC100YH2-010
30-80-10 03	MTC100YH2-010
31-20-35 03	MTC100YH2-010
31-20-60 02	MTC100YH2-010
32-60-10 04	MTC100YH2-010

IDENT CH-SECT-UNIT-FIG	PART NUMBER
DA35-R	
32-60-20 02	MTC100YH2-010
DA36-P	
27-30-10 07	MTCR16104P
27-30-10 08	MTCR16104P
DA36-P	
30-30-31 02	MTCR161-04P
DA36-R	
27-30-10 07	MTCR10104S
27-30-10 08	MTCR10104S
DA36-R	
30-30-31 02	MTCR101-04S
DA37-P	
27-30-10 07	MTCR16104P
27-30-10 08	MTCR16104P
DA37-P	
30-30-10 02	MTCR161-04P
30-30-31 02	MTCR161-04P
DA37-R	
27-30-10 07	MTCR10104S
27-30-10 08	MTCR10104S
DA37-R	
30-30-10 02	MTCR101-04S
30-30-31 02	MTCR101-04S
DA38-P	
33-30-15 07	MTC16104P
33-40-20 04	MTC16104P
DA38-P	
49-60-30 06	MTCR161-04P
49-60-30 08	MTCR161-04P
49-60-30 09	MTCR161-04P
49-60-30 11	MTCR161-04P
DA38-R	
33-30-15 07	MTC10104S
33-40-20 04	MTC10104S
DA38-R	
49-60-30 06	MTCR101-04S
49-60-30 08	MTCR101-04S
49-60-30 09	MTCR101-04S
49-60-30 11	MTCR101-04S
DA39-P	
33-40-20 04	MTC16104P
DA39-P	
49-60-30 06	MTCR161-04P
49-60-30 08	MTCR161-04P
49-60-30 09	MTCR161-04P
49-60-30 11	MTCR161-04P
DA39-R	
33-40-20 04	MTC10104S
DA39-R	
49-60-30 06	MTCR101-04S

IDENT CH-SECT-UNIT-FIG	PART NUMBER
DA39-R	
49-60-30 08	MTCR101-04S
49-60-30 09	MTCR101-04S
49-60-30 11	MTCR101-04S
DA4-P	
21-60-10 08	MTC100KT2-1101
21-60-10 10	MTC100KT2-1101
21-60-10 11	MTC100KT2-1101
24-30-20 02	MTC100KT2-1101
24-30-20 03	MTC100KT2-1101
24-50-01 05	MTC100KT2-1101
24-50-01 06	MTC100KT2-1101
24-50-01 07	MTC100KT2-1101
28-41-10 02	MTC100KT2-1101
28-41-10 03	MTC100KT2-1101
30-30-20 02	MTC100KT2-1101
49-60-30 08	MTC100KT2-1101
49-60-30 09	MTC100KT2-1101
49-60-30 11	MTC100KT2-1101
73-20-10 03	MTC100KT2-1101
21-60-10 08	MTC100KT2-1102
21-60-10 10	MTC100KT2-1102
21-60-10 11	MTC100KT2-1102
24-30-20 02	MTC100KT2-1102
24-30-20 03	MTC100KT2-1102
24-50-01 05	MTC100KT2-1102
24-50-01 06	MTC100KT2-1102
24-50-01 07	MTC100KT2-1102
28-41-10 02	MTC100KT2-1102
28-41-10 03	MTC100KT2-1102
30-30-20 02	MTC100KT2-1102
49-60-30 08	MTC100KT2-1102
49-60-30 09	MTC100KT2-1102
49-60-30 11	MTC100KT2-1102
73-20-10 03	MTC100KT2-1102
21-60-10 08	MTC100YH2-009
21-60-10 10	MTC100YH2-009
21-60-10 11	MTC100YH2-009
24-30-20 02	MTC100YH2-009
24-30-20 03	MTC100YH2-009
24-50-01 05	MTC100YH2-009
24-50-01 06	MTC100YH2-009
24-50-01 07	MTC100YH2-009
28-41-10 02	MTC100YH2-009
28-41-10 03	MTC100YH2-009
30-30-20 02	MTC100YH2-009
49-60-30 08	MTC100YH2-009
49-60-30 09	MTC100YH2-009
49-60-30 11	MTC100YH2-009
73-20-10 03	MTC100YH2-009
DA4-P	

IDENT CH-SECT-UNIT-FIG	PART NUMBER
DA4-P	
21-60-10 11	MTC100YC1-001
24-30-20 02	MTC100YC1-001
24-30-20 03	MTC100YC1-001
24-50-01 06	MTC100YC1-001
24-50-01 07	MTC100YC1-001
28-41-10 02	MTC100YC1-001
30-30-20 02	MTC100YC1-001
49-60-30 08	MTC100YC1-001
73-20-10 03	MTC100YC1-001
21-60-10 11	MTC100YC1-002
24-30-20 02	MTC100YC1-002
24-30-20 03	MTC100YC1-002
24-50-01 06	MTC100YC1-002
24-50-01 07	MTC100YC1-002
28-41-10 02	MTC100YC1-002
30-30-20 02	MTC100YC1-002
49-60-30 08	MTC100YC1-002
73-20-10 03	MTC100YC1-002
21-60-10 11	MTC100YH2-009
24-30-20 02	MTC100YH2-009
24-30-20 03	MTC100YH2-009
24-50-01 06	MTC100YH2-009
24-50-01 07	MTC100YH2-009
28-41-10 02	MTC100YH2-009
30-30-20 02	MTC100YH2-009
49-60-30 08	MTC100YH2-009
73-20-10 03	MTC100YH2-009
DA4-R	
21-60-10 08	MTC100KT2-1103
21-60-10 10	MTC100KT2-1103
21-60-10 11	MTC100KT2-1103
24-30-20 02	MTC100KT2-1103
24-30-20 03	MTC100KT2-1103
24-50-01 05	MTC100KT2-1103
24-50-01 06	MTC100KT2-1103
24-50-01 07	MTC100KT2-1103
28-41-10 02	MTC100KT2-1103
28-41-10 03	MTC100KT2-1103
30-30-20 02	MTC100KT2-1103
49-60-30 08	MTC100KT2-1103
49-60-30 09	MTC100KT2-1103
49-60-30 11	MTC100KT2-1103
73-20-10 03	MTC100KT2-1103
21-60-10 08	MTC100KT2-1104
21-60-10 10	MTC100KT2-1104
21-60-10 11	MTC100KT2-1104
24-30-20 02	MTC100KT2-1104
24-30-20 03	MTC100KT2-1104
24-50-01 05	MTC100KT2-1104
24-50-01 06	MTC100KT2-1104

IDENT CH-SECT-UNIT-FIG	PART NUMBER
DA4-R	
24-50-01 07	MTC100KT2-1104
28-41-10 02	MTC100KT2-1104
28-41-10 03	MTC100KT2-1104
30-30-20 02	MTC100KT2-1104
49-60-30 08	MTC100KT2-1104
49-60-30 09	MTC100KT2-1104
49-60-30 11	MTC100KT2-1104
73-20-10 03	MTC100KT2-1104
21-60-10 08	MTC100YH2-010
21-60-10 10	MTC100YH2-010
21-60-10 11	MTC100YH2-010
24-30-20 02	MTC100YH2-010
24-30-20 03	MTC100YH2-010
24-50-01 05	MTC100YH2-010
24-50-01 06	MTC100YH2-010
24-50-01 07	MTC100YH2-010
28-41-10 02	MTC100YH2-010
28-41-10 03	MTC100YH2-010
30-30-20 02	MTC100YH2-010
49-60-30 08	MTC100YH2-010
49-60-30 09	MTC100YH2-010
49-60-30 11	MTC100YH2-010
73-20-10 03	MTC100YH2-010
DA4-R	
21-60-10 11	MTC100YC1-003
24-30-20 02	MTC100YC1-003
24-30-20 03	MTC100YC1-003
24-50-01 06	MTC100YC1-003
24-50-01 07	MTC100YC1-003
28-41-10 02	MTC100YC1-003
30-30-20 02	MTC100YC1-003
49-60-30 08	MTC100YC1-003
73-20-10 03	MTC100YC1-003
21-60-10 11	MTC100YC1-004
24-30-20 02	MTC100YC1-004
24-30-20 03	MTC100YC1-004
24-50-01 06	MTC100YC1-004
24-50-01 07	MTC100YC1-004
28-41-10 02	MTC100YC1-004
30-30-20 02	MTC100YC1-004
49-60-30 08	MTC100YC1-004
73-20-10 03	MTC100YC1-004
21-60-10 11	MTC100YH2-010
24-30-20 02	MTC100YH2-010
24-30-20 03	MTC100YH2-010
24-50-01 06	MTC100YH2-010
24-50-01 07	MTC100YH2-010
28-41-10 02	MTC100YH2-010
30-30-20 02	MTC100YH2-010
49-60-30 08	MTC100YH2-010

IDENT CH-SECT-UNIT-FIG	PART NUMBER
DA4-R	
73-20-10 03	MTC100YH2-010
DA40-P	
24-21-17 03	MTCR161-04P
24-21-17 04	MTCR161-04P
27-33-00 05	MTCR161-04P
27-33-00 07	MTCR161-04P
DA40-R	
24-21-17 03	MTCR101-04S
24-21-17 04	MTCR101-04S
27-33-00 05	MTCR101-04S
27-33-00 07	MTCR101-04S
DA41-P	
24-21-17 03	MTCR161-04P
24-21-17 04	MTCR161-04P
27-33-00 05	MTCR161-04P
27-33-00 07	MTCR161-04P
DA41-R	
24-21-17 03	MTCR101-04S
24-21-17 04	MTCR101-04S
27-33-00 05	MTCR101-04S
27-33-00 07	MTCR101-04S
DA42-P	
27-33-00 05	MTC100KTI-1102
27-33-00 07	MTC100KTI-1102
30-30-20 02	MTC100KTI-1102
27-33-00 05	MTC100KT1-1101
27-33-00 07	MTC100KT1-1101
30-10-10 11	MTC100KT1-1101
30-30-20 02	MTC100KT1-1101
30-10-10 11	MTC100KT1-1102
27-33-00 05	MTC100YH1-003
27-33-00 07	MTC100YH1-003
30-10-10 11	MTC100YH1-003
30-30-20 02	MTC100YH1-003
DA42-P	
27-33-00 07	MTC100YC1-005
30-10-10 11	MTC100YC1-005
30-30-20 02	MTC100YC1-005
27-33-00 07	MTC100YH1-003
30-10-10 11	MTC100YH1-003
30-30-20 02	MTC100YH1-003
DA42-R	
27-33-00 05	MTC100KT1-1103
27-33-00 07	MTC100KT1-1103
30-10-10 11	MTC100KT1-1103
30-30-20 02	MTC100KT1-1103
27-33-00 05	MTC100KT1-1104
27-33-00 07	MTC100KT1-1104
30-10-10 11	MTC100KT1-1104
30-30-20 02	MTC100KT1-1104

IDENT CH-SECT-UNIT-FIG	PART NUMBER
DA42-R	
27-33-00 05	MTC100YH1-004
27-33-00 07	MTC100YH1-004
30-10-10 11	MTC100YH1-004
30-30-20 02	MTC100YH1-004
DA42-R	
27-33-00 07	MTC100YC1-006
30-10-10 11	MTC100YC1-006
30-30-20 02	MTC100YC1-006
27-33-00 07	MTC100YH1-004
30-10-10 11	MTC100YH1-004
30-30-20 02	MTC100YH1-004
DA43-P	
27-33-00 05	MTC100KTI-1102
27-33-00 07	MTC100KTI-1102
27-33-00 05	MTC100KT1-1101
27-33-00 07	MTC100KT1-1101
28-41-10 02	MTC100KT1-1101
28-41-10 03	MTC100KT1-1101
28-41-20 03	MTC100KT1-1101
28-41-10 02	MTC100KT1-1102
28-41-10 03	MTC100KT1-1102
28-41-20 03	MTC100KT1-1102
27-33-00 05	MTC100YH1-003
27-33-00 07	MTC100YH1-003
28-41-10 02	MTC100YH1-003
28-41-10 03	MTC100YH1-003
28-41-20 03	MTC100YH1-003
DA43-P	
27-33-00 07	MTC100YC1-005
28-41-10 02	MTC100YC1-005
28-41-20 03	MTC100YC1-005
27-33-00 07	MTC100YH1-003
28-41-10 02	MTC100YH1-003
28-41-20 03	MTC100YH1-003
DA43-R	
27-33-00 05	MTC100KT1-1103
27-33-00 07	MTC100KT1-1103
28-41-10 02	MTC100KT1-1103
28-41-10 03	MTC100KT1-1103
28-41-20 03	MTC100KT1-1103
27-33-00 05	MTC100KT1-1104
27-33-00 07	MTC100KT1-1104
28-41-10 02	MTC100KT1-1104
28-41-10 03	MTC100KT1-1104
28-41-20 03	MTC100KT1-1104
27-33-00 05	MTC100YH1-004
27-33-00 07	MTC100YH1-004
28-41-10 02	MTC100YH1-004
28-41-10 03	MTC100YH1-004
28-41-20 03	MTC100YH1-004

IDENT CH-SECT-UNIT-FIG	PART NUMBER
DA43-R	
27-33-00 07	MTC100YC1-006
28-41-10 02	MTC100YC1-006
28-41-20 03	MTC100YC1-006
27-33-00 07	MTC100YH1-004
28-41-10 02	MTC100YH1-004
28-41-20 03	MTC100YH1-004
DA44-P	
30-40-15 07	MTCR161-04P
30-40-15 10	MTCR161-04P
30-40-15 11	MTCR161-04P
30-40-15 12	MTCR161-04P
DA44-R	
30-40-15 07	MTCR101-04S
30-40-15 10	MTCR101-04S
30-40-15 11	MTCR101-04S
30-40-15 12	MTCR101-04S
DA45-P	
30-40-15 07	MTCR161-04P
30-40-15 10	MTCR161-04P
30-40-15 11	MTCR161-04P
30-40-15 12	MTCR161-04P
DA45-R	
30-40-15 07	MTCR101-04S
30-40-15 10	MTCR101-04S
30-40-15 11	MTCR101-04S
30-40-15 12	MTCR101-04S
DA46-P	
27-33-00 05	MTC100KTI-1102
27-33-00 07	MTC100KTI-1102
26-10-10 03	MTC100KT1-1101
27-33-00 05	MTC100KT1-1101
27-33-00 07	MTC100KT1-1101
30-10-10 11	MTC100KT1-1101
32-60-30 02	MTC100KT1-1101
32-60-30 03	MTC100KT1-1101
33-10-05 05	MTC100KT1-1101
33-10-05 07	MTC100KT1-1101
33-10-05 08	MTC100KT1-1101
33-10-05 09	MTC100KT1-1101
33-10-05 11	MTC100KT1-1101
33-10-20 04	MTC100KT1-1101
33-10-20 07	MTC100KT1-1101
33-10-20 08	MTC100KT1-1101
73-20-10 03	MTC100KT1-1101
26-10-10 03	MTC100KT1-1102
30-10-10 11	MTC100KT1-1102
32-60-30 02	MTC100KT1-1102
32-60-30 03	MTC100KT1-1102
33-10-05 05	MTC100KT1-1102
33-10-05 07	MTC100KT1-1102

IDENT CH-SECT-UNIT-FIG	PART NUMBER
DA46-P	
33-10-05 08	MTC100KT1-1102
33-10-05 09	MTC100KT1-1102
33-10-05 11	MTC100KT1-1102
33-10-20 04	MTC100KT1-1102
33-10-20 07	MTC100KT1-1102
33-10-20 08	MTC100KT1-1102
73-20-10 03	MTC100KT1-1102
26-10-10 03	MTC100YH1-003
27-33-00 05	MTC100YH1-003
27-33-00 07	MTC100YH1-003
30-10-10 11	MTC100YH1-003
32-60-30 02	MTC100YH1-003
32-60-30 03	MTC100YH1-003
33-10-05 05	MTC100YH1-003
33-10-05 07	MTC100YH1-003
33-10-05 08	MTC100YH1-003
33-10-05 09	MTC100YH1-003
33-10-05 11	MTC100YH1-003
33-10-20 04	MTC100YH1-003
33-10-20 07	MTC100YH1-003
33-10-20 08	MTC100YH1-003
73-20-10 03	MTC100YH1-003
DA46-P	
26-10-10 03	MTC100YC1-005
27-33-00 07	MTC100YC1-005
30-10-10 11	MTC100YC1-005
32-60-30 03	MTC100YC1-005
33-10-05 09	MTC100YC1-005
33-10-05 11	MTC100YC1-005
33-10-20 08	MTC100YC1-005
73-20-10 03	MTC100YC1-005
26-10-10 03	MTC100YH1-003
27-33-00 07	MTC100YH1-003
30-10-10 11	MTC100YH1-003
32-60-30 03	MTC100YH1-003
33-10-05 09	MTC100YH1-003
33-10-05 11	MTC100YH1-003
33-10-20 08	MTC100YH1-003
73-20-10 03	MTC100YH1-003
DA46-R	
26-10-10 03	MTC100KT1-1103
27-33-00 05	MTC100KT1-1103
27-33-00 07	MTC100KT1-1103
30-10-10 11	MTC100KT1-1103
32-60-30 02	MTC100KT1-1103
32-60-30 03	MTC100KT1-1103
33-10-05 05	MTC100KT1-1103
33-10-05 07	MTC100KT1-1103
33-10-05 08	MTC100KT1-1103
33-10-05 09	MTC100KT1-1103

IDENT CH-SECT-UNIT-FIG	PART NUMBER
DA46-R	
33-10-05 11	MTC100KT1-1103
33-10-20 04	MTC100KT1-1103
33-10-20 07	MTC100KT1-1103
33-10-20 08	MTC100KT1-1103
73-20-10 03	MTC100KT1-1103
26-10-10 03	MTC100KT1-1104
27-33-00 05	MTC100KT1-1104
27-33-00 07	MTC100KT1-1104
30-10-10 11	MTC100KT1-1104
32-60-30 02	MTC100KT1-1104
32-60-30 03	MTC100KT1-1104
33-10-05 05	MTC100KT1-1104
33-10-05 07	MTC100KT1-1104
33-10-05 08	MTC100KT1-1104
33-10-05 09	MTC100KT1-1104
33-10-05 11	MTC100KT1-1104
33-10-20 04	MTC100KT1-1104
33-10-20 07	MTC100KT1-1104
33-10-20 08	MTC100KT1-1104
73-20-10 03	MTC100KT1-1104
26-10-10 03	MTC100YH1-004
27-33-00 05	MTC100YH1-004
27-33-00 07	MTC100YH1-004
30-10-10 11	MTC100YH1-004
32-60-30 02	MTC100YH1-004
32-60-30 03	MTC100YH1-004
33-10-05 05	MTC100YH1-004
33-10-05 07	MTC100YH1-004
33-10-05 08	MTC100YH1-004
33-10-05 09	MTC100YH1-004
33-10-05 11	MTC100YH1-004
33-10-20 04	MTC100YH1-004
33-10-20 07	MTC100YH1-004
33-10-20 08	MTC100YH1-004
73-20-10 03	MTC100YH1-004
DA46-R	
26-10-10 03	MTC100YC1-006
27-33-00 07	MTC100YC1-006
30-10-10 11	MTC100YC1-006
32-60-30 03	MTC100YC1-006
33-10-05 09	MTC100YC1-006
33-10-05 11	MTC100YC1-006
33-10-20 08	MTC100YC1-006
73-20-10 03	MTC100YC1-006
26-10-10 03	MTC100YH1-004
27-33-00 07	MTC100YH1-004
30-10-10 11	MTC100YH1-004
32-60-30 03	MTC100YH1-004
33-10-05 09	MTC100YH1-004
33-10-05 11	MTC100YH1-004

IDENT CH-SECT-UNIT-FIG	PART NUMBER
DA46-R	
33-10-20 08	MTC100YH1-004
73-20-10 03	MTC100YH1-004
DA47-P	
27-33-00 05	MTC100KTI-1102
27-33-00 07	MTC100KTI-1102
21-20-10 03	MTC100KT1-1101
27-24-10 02	MTC100KT1-1101
27-24-10 03	MTC100KT1-1101
27-33-00 05	MTC100KT1-1101
27-33-00 07	MTC100KT1-1101
30-10-10 11	MTC100KT1-1101
32-60-30 02	MTC100KT1-1101
32-60-30 03	MTC100KT1-1101
33-10-05 05	MTC100KT1-1101
33-10-05 07	MTC100KT1-1101
33-10-05 08	MTC100KT1-1101
33-10-05 09	MTC100KT1-1101
33-10-05 11	MTC100KT1-1101
33-10-20 04	MTC100KT1-1101
33-10-20 07	MTC100KT1-1101
33-10-20 08	MTC100KT1-1101
21-20-10 03	MTC100KT1-1102
27-24-10 02	MTC100KT1-1102
27-24-10 03	MTC100KT1-1102
30-10-10 11	MTC100KT1-1102
32-60-30 02	MTC100KT1-1102
32-60-30 03	MTC100KT1-1102
33-10-05 05	MTC100KT1-1102
33-10-05 07	MTC100KT1-1102
33-10-05 08	MTC100KT1-1102
33-10-05 09	MTC100KT1-1102
33-10-05 11	MTC100KT1-1102
33-10-20 04	MTC100KT1-1102
33-10-20 07	MTC100KT1-1102
33-10-20 08	MTC100KT1-1102
21-20-10 03	MTC100YH1-003
27-24-10 02	MTC100YH1-003
27-24-10 03	MTC100YH1-003
27-33-00 05	MTC100YH1-003
27-33-00 07	MTC100YH1-003
30-10-10 11	MTC100YH1-003
32-60-30 02	MTC100YH1-003
32-60-30 03	MTC100YH1-003
33-10-05 05	MTC100YH1-003
33-10-05 07	MTC100YH1-003
33-10-05 08	MTC100YH1-003
33-10-05 09	MTC100YH1-003
33-10-05 11	MTC100YH1-003
33-10-20 04	MTC100YH1-003
33-10-20 07	MTC100YH1-003

IDENT CH-SECT-UNIT-FIG	PART NUMBER
DA47-P	
33-10-20 08	MTC100YH1-003
DA47-P	
21-20-10 03	MTC100YC1-005
27-24-10 03	MTC100YC1-005
27-33-00 07	MTC100YC1-005
30-10-10 11	MTC100YC1-005
32-60-30 03	MTC100YC1-005
33-10-05 09	MTC100YC1-005
33-10-05 11	MTC100YC1-005
33-10-20 08	MTC100YC1-005
21-20-10 03	MTC100YH1-003
27-24-10 03	MTC100YH1-003
27-33-00 07	MTC100YH1-003
30-10-10 11	MTC100YH1-003
32-60-30 03	MTC100YH1-003
33-10-05 09	MTC100YH1-003
33-10-05 11	MTC100YH1-003
33-10-20 08	MTC100YH1-003
DA47-R	
21-20-10 03	MTC100KT1-1103
27-24-10 02	MTC100KT1-1103
27-24-10 03	MTC100KT1-1103
27-33-00 05	MTC100KT1-1103
27-33-00 07	MTC100KT1-1103
30-10-10 11	MTC100KT1-1103
32-60-30 02	MTC100KT1-1103
32-60-30 03	MTC100KT1-1103
33-10-05 05	MTC100KT1-1103
33-10-05 07	MTC100KT1-1103
33-10-05 08	MTC100KT1-1103
33-10-05 09	MTC100KT1-1103
33-10-05 11	MTC100KT1-1103
33-10-20 04	MTC100KT1-1103
33-10-20 07	MTC100KT1-1103
33-10-20 08	MTC100KT1-1103
21-20-10 03	MTC100KT1-1104
27-24-10 02	MTC100KT1-1104
27-24-10 03	MTC100KT1-1104
27-33-00 05	MTC100KT1-1104
27-33-00 07	MTC100KT1-1104
30-10-10 11	MTC100KT1-1104
32-60-30 02	MTC100KT1-1104
32-60-30 03	MTC100KT1-1104
33-10-05 05	MTC100KT1-1104
33-10-05 07	MTC100KT1-1104
33-10-05 08	MTC100KT1-1104
33-10-05 09	MTC100KT1-1104
33-10-05 11	MTC100KT1-1104
33-10-20 04	MTC100KT1-1104
33-10-20 07	MTC100KT1-1104

IDENT CH-SECT-UNIT-FIG	PART NUMBER
DA47-R	
33-10-20 08	MTC100KT1-1104
21-20-10 03	MTC100YH1-004
27-24-10 02	MTC100YH1-004
27-24-10 03	MTC100YH1-004
27-33-00 05	MTC100YH1-004
27-33-00 07	MTC100YH1-004
30-10-10 11	MTC100YH1-004
32-60-30 02	MTC100YH1-004
32-60-30 03	MTC100YH1-004
33-10-05 05	MTC100YH1-004
33-10-05 07	MTC100YH1-004
33-10-05 08	MTC100YH1-004
33-10-05 09	MTC100YH1-004
33-10-05 11	MTC100YH1-004
33-10-20 04	MTC100YH1-004
33-10-20 07	MTC100YH1-004
33-10-20 08	MTC100YH1-004
DA47-R	
21-20-10 03	MTC100YC1-006
27-24-10 03	MTC100YC1-006
27-33-00 07	MTC100YC1-006
30-10-10 11	MTC100YC1-006
32-60-30 03	MTC100YC1-006
33-10-05 09	MTC100YC1-006
33-10-05 11	MTC100YC1-006
33-10-20 08	MTC100YC1-006
21-20-10 03	MTC100YH1-004
27-24-10 03	MTC100YH1-004
27-33-00 07	MTC100YH1-004
30-10-10 11	MTC100YH1-004
32-60-30 03	MTC100YH1-004
33-10-05 09	MTC100YH1-004
33-10-05 11	MTC100YH1-004
33-10-20 08	MTC100YH1-004
DA5-P	
26-10-10 03	MTC100KT2-1101
27-33-00 05	MTC100KT2-1101
27-33-00 07	MTC100KT2-1101
28-41-10 02	MTC100KT2-1101
28-41-10 03	MTC100KT2-1101
30-10-10 11	MTC100KT2-1101
30-40-15 07	MTC100KT2-1101
30-40-15 10	MTC100KT2-1101
30-40-15 11	MTC100KT2-1101
30-40-15 12	MTC100KT2-1101
32-60-10 04	MTC100KT2-1101
73-20-10 03	MTC100KT2-1101
26-10-10 03	MTC100KT2-1102
27-33-00 05	MTC100KT2-1102
27-33-00 07	MTC100KT2-1102

IDENT CH-SECT-UNIT-FIG	PART NUMBER
DA5-P	
28-41-10 02	MTC100KT2-1102
28-41-10 03	MTC100KT2-1102
30-10-10 11	MTC100KT2-1102
30-40-15 07	MTC100KT2-1102
30-40-15 10	MTC100KT2-1102
30-40-15 11	MTC100KT2-1102
30-40-15 12	MTC100KT2-1102
32-60-10 04	MTC100KT2-1102
73-20-10 03	MTC100KT2-1102
27-61-10 08	MTC100YC1-001
27-61-10 08	MTC100YC1-002
26-10-10 03	MTC100YH2-009
27-33-00 05	MTC100YH2-009
27-33-00 07	MTC100YH2-009
27-61-10 08	MTC100YH2-009
28-41-10 02	MTC100YH2-009
28-41-10 03	MTC100YH2-009
30-10-10 11	MTC100YH2-009
30-40-15 07	MTC100YH2-009
30-40-15 10	MTC100YH2-009
30-40-15 11	MTC100YH2-009
30-40-15 12	MTC100YH2-009
32-60-10 04	MTC100YH2-009
73-20-10 03	MTC100YH2-009
DA5-P	
26-10-10 03	MTC100YC1-001
27-33-00 07	MTC100YC1-001
28-41-10 02	MTC100YC1-001
30-40-15 11	MTC100YC1-001
30-40-15 12	MTC100YC1-001
32-60-10 04	MTC100YC1-001
73-20-10 03	MTC100YC1-001
26-10-10 03	MTC100YC1-002
27-33-00 07	MTC100YC1-002
28-41-10 02	MTC100YC1-002
30-40-15 11	MTC100YC1-002
30-40-15 12	MTC100YC1-002
32-60-10 04	MTC100YC1-002
73-20-10 03	MTC100YC1-002
30-10-10 11	MTC100YC1-003
30-10-10 11	MTC100YC1-004
26-10-10 03	MTC100YH2-009
27-33-00 07	MTC100YH2-009
28-41-10 02	MTC100YH2-009
30-10-10 11	MTC100YH2-009
30-40-15 11	MTC100YH2-009
30-40-15 12	MTC100YH2-009
32-60-10 04	MTC100YH2-009
73-20-10 03	MTC100YH2-009
DA5-R	

IDENT CH-SECT-UNIT-FIG	PART NUMBER
DA5-R	
26-10-10 03	MTC100KT2-1103
27-33-00 05	MTC100KT2-1103
27-33-00 07	MTC100KT2-1103
28-41-10 02	MTC100KT2-1103
28-41-10 03	MTC100KT2-1103
30-10-10 11	MTC100KT2-1103
30-40-15 07	MTC100KT2-1103
30-40-15 10	MTC100KT2-1103
30-40-15 11	MTC100KT2-1103
30-40-15 12	MTC100KT2-1103
32-60-10 04	MTC100KT2-1103
73-20-10 03	MTC100KT2-1103
26-10-10 03	MTC100KT2-1104
27-33-00 05	MTC100KT2-1104
27-33-00 07	MTC100KT2-1104
28-41-10 02	MTC100KT2-1104
28-41-10 03	MTC100KT2-1104
30-10-10 11	MTC100KT2-1104
30-40-15 07	MTC100KT2-1104
30-40-15 10	MTC100KT2-1104
30-40-15 11	MTC100KT2-1104
30-40-15 12	MTC100KT2-1104
32-60-10 04	MTC100KT2-1104
73-20-10 03	MTC100KT2-1104
27-61-10 08	MTC100YC1-003
27-61-10 08	MTC100YC1-004
26-10-10 03	MTC100YH2-010
27-33-00 05	MTC100YH2-010
27-33-00 07	MTC100YH2-010
27-61-10 08	MTC100YH2-010
28-41-10 02	MTC100YH2-010
28-41-10 03	MTC100YH2-010
30-10-10 11	MTC100YH2-010
30-40-15 07	MTC100YH2-010
30-40-15 10	MTC100YH2-010
30-40-15 11	MTC100YH2-010
30-40-15 12	MTC100YH2-010
32-60-10 04	MTC100YH2-010
73-20-10 03	MTC100YH2-010
DA5-R	
26-10-10 03	MTC100YC1-003
27-33-00 07	MTC100YC1-003
28-41-10 02	MTC100YC1-003
30-10-10 11	MTC100YC1-003
30-40-15 11	MTC100YC1-003
30-40-15 12	MTC100YC1-003
32-60-10 04	MTC100YC1-003
73-20-10 03	MTC100YC1-003
26-10-10 03	MTC100YC1-004
27-33-00 07	MTC100YC1-004

IDENT CH-SECT-UNIT-FIG	PART NUMBER
DA5-R	
28-41-10 02	MTC100YC1-004
30-10-10 11	MTC100YC1-004
30-40-15 11	MTC100YC1-004
30-40-15 12	MTC100YC1-004
32-60-10 04	MTC100YC1-004
73-20-10 03	MTC100YC1-004
26-10-10 03	MTC100YH2-010
27-33-00 07	MTC100YH2-010
28-41-10 02	MTC100YH2-010
30-10-10 11	MTC100YH2-010
30-40-15 11	MTC100YH2-010
30-40-15 12	MTC100YH2-010
32-60-10 04	MTC100YH2-010
73-20-10 03	MTC100YH2-010
DA50-P	
31-50-01 08	MTCX1X100-100
31-50-05 03	MTCX1X100-100
31-50-01 08	MTC100KT1-1101
31-50-05 03	MTC100KT1-1101
33-10-10 31	MTC100KT1-1101
33-10-10 31	MTC100KT1-1102
31-50-01 08	MTC100YH1-003
31-50-05 03	MTC100YH1-003
33-10-10 31	MTC100YH1-003
DA50-R	
31-50-01 08	MTCX1X100-100
31-50-05 03	MTCX1X100-100
31-50-01 08	MTC100KT1-1103
31-50-05 03	MTC100KT1-1103
33-10-10 31	MTC100KT1-1103
33-10-10 31	MTC100KT1-1104
31-50-01 08	MTC100YH1-004
31-50-05 03	MTC100YH1-004
33-10-10 31	MTC100YH1-004
DA51-P	
78-30-05 01	MTCX1X100-100
78-30-05 02	MTCX1X100-100
78-30-05 01	MTC100KT1-1101
78-30-05 02	MTC100KT1-1101
78-30-05 01	MTC100YH1-003
78-30-05 02	MTC100YH1-003
DA51-P	
78-30-05 01	MTC100YC1-005
78-30-05 01	MTC100YH1-003
DA51-R	
78-30-05 01	MTCX1X100-100
78-30-05 02	MTCX1X100-100
78-30-05 01	MTC100KT1-1103
78-30-05 02	MTC100KT1-1103
78-30-05 01	MTC100YH1-004

IDENT CH-SECT-UNIT-FIG	PART NUMBER
DA51-R	
78-30-05 02	MTC100YH1-004
DA51-R	
78-30-05 01	MTC100YC1-006
78-30-05 01	MTC100YH1-004
DA6-P	
27-33-00 05	MTC100KT2-1101
27-33-00 07	MTC100KT2-1101
27-61-10 03	MTC100KT2-1101
27-61-10 04	MTC100KT2-1101
30-30-10 02	MTC100KT2-1101
30-40-15 07	MTC100KT2-1101
30-40-15 10	MTC100KT2-1101
30-40-15 11	MTC100KT2-1101
30-40-15 12	MTC100KT2-1101
31-50-01 14	MTC100KT2-1101
32-60-10 04	MTC100KT2-1101
33-10-20 04	MTC100KT2-1101
33-10-20 07	MTC100KT2-1101
33-10-20 08	MTC100KT2-1101
27-33-00 05	MTC100KT2-1102
27-33-00 07	MTC100KT2-1102
27-61-10 03	MTC100KT2-1102
27-61-10 04	MTC100KT2-1102
30-30-10 02	MTC100KT2-1102
30-40-15 07	MTC100KT2-1102
30-40-15 10	MTC100KT2-1102
30-40-15 11	MTC100KT2-1102
30-40-15 12	MTC100KT2-1102
31-50-01 14	MTC100KT2-1102
32-60-10 04	MTC100KT2-1102
33-10-20 04	MTC100KT2-1102
33-10-20 07	MTC100KT2-1102
33-10-20 08	MTC100KT2-1102
27-61-10 08	MTC100YC1-001
27-61-10 08	MTC100YC1-002
27-33-00 05	MTC100YH2-009
27-33-00 07	MTC100YH2-009
27-61-10 03	MTC100YH2-009
27-61-10 04	MTC100YH2-009
27-61-10 08	MTC100YH2-009
30-30-10 02	MTC100YH2-009
30-40-15 07	MTC100YH2-009
30-40-15 10	MTC100YH2-009
30-40-15 11	MTC100YH2-009
30-40-15 12	MTC100YH2-009
31-50-01 14	MTC100YH2-009
32-60-10 04	MTC100YH2-009
33-10-20 04	MTC100YH2-009
33-10-20 07	MTC100YH2-009
33-10-20 08	MTC100YH2-009

IDENT CH-SECT-UNIT-FIG	PART NUMBER
DA6-P	
27-33-00 07	MTC100YC1-001
27-61-10 04	MTC100YC1-001
30-30-10 02	MTC100YC1-001
30-40-15 11	MTC100YC1-001
30-40-15 12	MTC100YC1-001
31-50-01 14	MTC100YC1-001
32-60-10 04	MTC100YC1-001
33-10-20 08	MTC100YC1-001
27-33-00 07	MTC100YC1-002
27-61-10 04	MTC100YC1-002
30-30-10 02	MTC100YC1-002
30-40-15 11	MTC100YC1-002
30-40-15 12	MTC100YC1-002
31-50-01 14	MTC100YC1-002
32-60-10 04	MTC100YC1-002
33-10-20 08	MTC100YC1-002
27-33-00 07	MTC100YH2-009
27-61-10 04	MTC100YH2-009
30-30-10 02	MTC100YH2-009
30-40-15 11	MTC100YH2-009
30-40-15 12	MTC100YH2-009
31-50-01 14	MTC100YH2-009
32-60-10 04	MTC100YH2-009
33-10-20 08	MTC100YH2-009
DA6-R	
27-33-00 05	MTC100KT2-1103
27-33-00 07	MTC100KT2-1103
27-61-10 03	MTC100KT2-1103
27-61-10 04	MTC100KT2-1103
30-30-10 02	MTC100KT2-1103
30-40-15 07	MTC100KT2-1103
30-40-15 10	MTC100KT2-1103
30-40-15 11	MTC100KT2-1103
30-40-15 12	MTC100KT2-1103
31-50-01 14	MTC100KT2-1103
32-60-10 04	MTC100KT2-1103
33-10-20 04	MTC100KT2-1103
33-10-20 07	MTC100KT2-1103
33-10-20 08	MTC100KT2-1103
27-33-00 05	MTC100KT2-1104
27-33-00 07	MTC100KT2-1104
27-61-10 03	MTC100KT2-1104
27-61-10 04	MTC100KT2-1104
30-30-10 02	MTC100KT2-1104
30-40-15 07	MTC100KT2-1104
30-40-15 10	MTC100KT2-1104
30-40-15 11	MTC100KT2-1104
30-40-15 12	MTC100KT2-1104
31-50-01 14	MTC100KT2-1104
32-60-10 04	MTC100KT2-1104

IDENT CH-SECT-UNIT-FIG	PART NUMBER
DA6-R	
33-10-20 04	MTC100KT2-1104
33-10-20 07	MTC100KT2-1104
33-10-20 08	MTC100KT2-1104
27-61-10 08	MTC100YC1-003
27-61-10 08	MTC100YC1-004
27-33-00 05	MTC100YH2-010
27-33-00 07	MTC100YH2-010
27-61-10 03	MTC100YH2-010
27-61-10 04	MTC100YH2-010
27-61-10 08	MTC100YH2-010
30-30-10 02	MTC100YH2-010
30-40-15 07	MTC100YH2-010
30-40-15 10	MTC100YH2-010
30-40-15 11	MTC100YH2-010
30-40-15 12	MTC100YH2-010
31-50-01 14	MTC100YH2-010
32-60-10 04	MTC100YH2-010
33-10-20 04	MTC100YH2-010
33-10-20 07	MTC100YH2-010
33-10-20 08	MTC100YH2-010
DA6-R	
27-33-00 07	MTC100YC1-003
27-61-10 04	MTC100YC1-003
30-30-10 02	MTC100YC1-003
30-40-15 11	MTC100YC1-003
30-40-15 12	MTC100YC1-003
31-50-01 14	MTC100YC1-003
32-60-10 04	MTC100YC1-003
33-10-20 08	MTC100YC1-003
27-33-00 07	MTC100YC1-004
27-61-10 04	MTC100YC1-004
30-30-10 02	MTC100YC1-004
30-40-15 11	MTC100YC1-004
30-40-15 12	MTC100YC1-004
31-50-01 14	MTC100YC1-004
32-60-10 04	MTC100YC1-004
33-10-20 08	MTC100YC1-004
27-33-00 07	MTC100YH2-010
27-61-10 04	MTC100YH2-010
30-30-10 02	MTC100YH2-010
30-40-15 11	MTC100YH2-010
30-40-15 12	MTC100YH2-010
31-50-01 14	MTC100YH2-010
32-60-10 04	MTC100YH2-010
33-10-20 08	MTC100YH2-010
DA7-P	
27-33-00 05	MTCX1X100-100
27-33-00 07	MTCX1X100-100
27-61-20 04	MTCX1X100-100
28-41-20 03	MTCX1X100-100

IDENT CH-SECT-UNIT-FIG	PART NUMBER
DA7-P	
34-13-01 04	MTCX1X100-100
34-13-01 08	MTCX1X100-100
32-60-10 04	MTC100KTI-1102
27-33-00 05	MTC100KT1-1101
27-33-00 07	MTC100KT1-1101
27-61-20 04	MTC100KT1-1101
28-41-20 03	MTC100KT1-1101
32-60-10 04	MTC100KT1-1101
34-13-01 04	MTC100KT1-1101
34-13-01 08	MTC100KT1-1101
27-33-00 05	MTC100YH1-003
27-33-00 07	MTC100YH1-003
27-61-20 04	MTC100YH1-003
28-41-20 03	MTC100YH1-003
32-60-10 04	MTC100YH1-003
34-13-01 04	MTC100YH1-003
34-13-01 08	MTC100YH1-003
DA7-P	
27-33-00 07	MTC100YC1-005
28-41-20 03	MTC100YC1-005
32-60-10 04	MTC100YC1-005
34-13-01 04	MTC100YC1-005
34-13-01 08	MTC100YC1-005
27-33-00 07	MTC100YH1-003
28-41-20 03	MTC100YH1-003
32-60-10 04	MTC100YH1-003
34-13-01 04	MTC100YH1-003
34-13-01 08	MTC100YH1-003
DA7-R	
27-33-00 05	MTCX1X100-100
27-33-00 07	MTCX1X100-100
27-61-20 04	MTCX1X100-100
28-41-20 03	MTCX1X100-100
34-13-01 04	MTCX1X100-100
34-13-01 08	MTCX1X100-100
27-33-00 05	MTC100KT1-1103
27-33-00 07	MTC100KT1-1103
27-61-20 04	MTC100KT1-1103
28-41-20 03	MTC100KT1-1103
32-60-10 04	MTC100KT1-1103
34-13-01 04	MTC100KT1-1103
34-13-01 08	MTC100KT1-1103
32-60-10 04	MTC100KT1-1104
27-33-00 05	MTC100YH1-004
27-33-00 07	MTC100YH1-004
27-61-20 04	MTC100YH1-004
28-41-20 03	MTC100YH1-004
32-60-10 04	MTC100YH1-004
34-13-01 04	MTC100YH1-004
34-13-01 08	MTC100YH1-004

IDENT CH-SECT-UNIT-FIG	PART NUMBER
DA7-R	
27-33-00 07	MTC100YC1-006
28-41-20 03	MTC100YC1-006
32-60-10 04	MTC100YC1-006
34-13-01 04	MTC100YC1-006
34-13-01 08	MTC100YC1-006
27-33-00 07	MTC100YH1-004
28-41-20 03	MTC100YH1-004
32-60-10 04	MTC100YH1-004
34-13-01 04	MTC100YH1-004
34-13-01 08	MTC100YH1-004
DA8-P	
30-30-20 02	MTC100KTI-1102
30-30-20 02	MTC100KT1-1101
30-40-20 03	MTC100KT1-1101
30-40-20 05	MTC100KT1-1101
30-80-10 02	MTC100KT1-1101
30-80-10 03	MTC100KT1-1101
33-10-20 04	MTC100KT1-1101
33-10-20 07	MTC100KT1-1101
33-10-20 08	MTC100KT1-1101
30-40-20 03	MTC100KT1-1102
30-40-20 05	MTC100KT1-1102
30-80-10 02	MTC100KT1-1102
30-80-10 03	MTC100KT1-1102
33-10-20 04	MTC100KT1-1102
33-10-20 07	MTC100KT1-1102
33-10-20 08	MTC100KT1-1102
30-30-20 02	MTC100YH1-003
30-40-20 03	MTC100YH1-003
30-40-20 05	MTC100YH1-003
30-80-10 02	MTC100YH1-003
30-80-10 03	MTC100YH1-003
33-10-20 04	MTC100YH1-003
33-10-20 07	MTC100YH1-003
33-10-20 08	MTC100YH1-003
DA8-P	
30-30-20 02	MTC100YC1-005
30-40-20 05	MTC100YC1-005
30-80-10 03	MTC100YC1-005
33-10-20 08	MTC100YC1-005
30-30-20 02	MTC100YH1-003
30-40-20 05	MTC100YH1-003
30-80-10 03	MTC100YH1-003
33-10-20 08	MTC100YH1-003
DA8-R	
30-30-20 02	MTC100KT1-1103
30-40-20 03	MTC100KT1-1103
30-40-20 05	MTC100KT1-1103
30-80-10 02	MTC100KT1-1103
30-80-10 03	MTC100KT1-1103

IDENT CH-SECT-UNIT-FIG	PART NUMBER
DA8-R	
33-10-20 04	MTC100KT1-1103
33-10-20 07	MTC100KT1-1103
33-10-20 08	MTC100KT1-1103
30-30-20 02	MTC100KT1-1104
30-40-20 03	MTC100KT1-1104
30-40-20 05	MTC100KT1-1104
30-80-10 02	MTC100KT1-1104
30-80-10 03	MTC100KT1-1104
33-10-20 04	MTC100KT1-1104
33-10-20 07	MTC100KT1-1104
33-10-20 08	MTC100KT1-1104
30-30-20 02	MTC100YH1-004
30-40-20 03	MTC100YH1-004
30-40-20 05	MTC100YH1-004
30-80-10 02	MTC100YH1-004
30-80-10 03	MTC100YH1-004
33-10-20 04	MTC100YH1-004
33-10-20 07	MTC100YH1-004
33-10-20 08	MTC100YH1-004
DA8-R	
30-30-20 02	MTC100YC1-006
30-40-20 05	MTC100YC1-006
30-80-10 03	MTC100YC1-006
33-10-20 08	MTC100YC1-006
30-30-20 02	MTC100YH1-004
30-40-20 05	MTC100YH1-004
30-80-10 03	MTC100YH1-004
33-10-20 08	MTC100YH1-004
DA9-P	
30-40-20 03	MTCX1X100-100
30-40-20 05	MTCX1X100-100
33-10-05 05	MTCX1X100-100
33-10-05 07	MTCX1X100-100
33-10-05 08	MTCX1X100-100
33-10-05 09	MTCX1X100-100
33-10-05 11	MTCX1X100-100
33-10-20 04	MTCX1X100-100
33-10-20 07	MTCX1X100-100
33-10-20 08	MTCX1X100-100
30-30-20 02	MTC100KTI-1102
30-30-20 02	MTC100KT1-1101
30-40-20 03	MTC100KT1-1102
30-40-20 05	MTC100KT1-1102
33-10-05 05	MTC100KT1-1102
33-10-05 07	MTC100KT1-1102
33-10-05 08	MTC100KT1-1102
33-10-05 09	MTC100KT1-1102
33-10-05 11	MTC100KT1-1102
33-10-20 04	MTC100KT1-1102
33-10-20 07	MTC100KT1-1102

IDENT CH-SECT-UNIT-FIG	PART NUMBER
DA9-P	
33-10-20 08	MTC100KT1-1102
30-30-20 02	MTC100YH1-003
30-40-20 03	MTC100YH1-003
30-40-20 05	MTC100YH1-003
33-10-05 05	MTC100YH1-003
33-10-05 07	MTC100YH1-003
33-10-05 08	MTC100YH1-003
33-10-05 09	MTC100YH1-003
33-10-05 11	MTC100YH1-003
33-10-20 04	MTC100YH1-003
33-10-20 07	MTC100YH1-003
33-10-20 08	MTC100YH1-003
DA9-P	
30-30-20 02	MTC100YC1-005
30-40-20 05	MTC100YC1-005
33-10-05 09	MTC100YC1-005
33-10-05 11	MTC100YC1-005
33-10-20 08	MTC100YC1-005
30-30-20 02	MTC100YH1-003
30-40-20 05	MTC100YH1-003
33-10-05 09	MTC100YH1-003
33-10-05 11	MTC100YH1-003
33-10-20 08	MTC100YH1-003
DA9-R	
30-40-20 03	MTCX1X100-100
30-40-20 05	MTCX1X100-100
33-10-05 05	MTCX1X100-100
33-10-05 07	MTCX1X100-100
33-10-05 08	MTCX1X100-100
33-10-05 09	MTCX1X100-100
33-10-05 11	MTCX1X100-100
33-10-20 04	MTCX1X100-100
33-10-20 07	MTCX1X100-100
33-10-20 08	MTCX1X100-100
30-30-20 02	MTC100KT1-1103
30-30-20 02	MTC100KT1-1104
30-40-20 03	MTC100KT1-1104
30-40-20 05	MTC100KT1-1104
33-10-05 05	MTC100KT1-1104
33-10-05 07	MTC100KT1-1104
33-10-05 08	MTC100KT1-1104
33-10-05 09	MTC100KT1-1104
33-10-05 11	MTC100KT1-1104
33-10-20 04	MTC100KT1-1104
33-10-20 07	MTC100KT1-1104
33-10-20 08	MTC100KT1-1104
30-30-20 02	MTC100YH1-004
30-40-20 03	MTC100YH1-004
30-40-20 05	MTC100YH1-004
33-10-05 05	MTC100YH1-004

IDENT CH-SECT-UNIT-FIG	PART NUMBER
DA9-R	
33-10-05 07	MTC100YH1-004
33-10-05 08	MTC100YH1-004
33-10-05 09	MTC100YH1-004
33-10-05 11	MTC100YH1-004
33-10-20 04	MTC100YH1-004
33-10-20 07	MTC100YH1-004
33-10-20 08	MTC100YH1-004
DA9-R	
30-30-20 02	MTC100YC1-006
30-40-20 05	MTC100YC1-006
33-10-05 09	MTC100YC1-006
33-10-05 11	MTC100YC1-006
33-10-20 08	MTC100YC1-006
30-30-20 02	MTC100YH1-004
30-40-20 05	MTC100YH1-004
33-10-05 09	MTC100YH1-004
33-10-05 11	MTC100YH1-004
33-10-20 08	MTC100YH1-004
DB-CC	
31-50-01 04	C9032-001B
31-50-01 07	C9032-001B
31-50-01 08	C9032-001B
31-50-01 09	C9032-001B
31-50-01 14	C9032-001B
DB-GG	
24-50-01 05	CV7313
24-50-01 06	CV7313
24-50-01 07	CV7313
DC	
27-00-10 03	422254-8
27-00-10 04	422254-8
27-33-00 05	422254-8
27-33-00 07	422254-8
27-50-10 02	422254-8
27-61-10 03	422254-8
27-61-10 04	422254-8
27-61-10 08	422254-8
28-21-05 02	422254-8
28-21-05 03	422254-8
28-21-05 04	422254-8
28-40-10 04	422254-8
28-40-10 05	422254-8
32-60-10 04	422254-8
32-60-20 02	422254-8
32-60-30 02	422254-8
32-60-30 03	422254-8
33-30-05 07	422254-8
33-40-10 05	422254-8
33-40-10 06	422254-8
33-40-20 04	422254-8

IDENT CH-SECT-UNIT-FIG	PART NUMBER
DC	
33-40-30 03	422254-8
34-13-01 04	422254-8
34-13-01 08	422254-8
73-20-10 03	422254-8
78-30-05 01	422254-8
78-30-05 02	422254-8
DC-CC	
31-50-01 04	C9032-001B
31-50-01 07	C9032-001B
31-50-01 08	C9032-001B
31-50-01 09	C9032-001B
31-50-01 14	C9032-001B
DC-DAB	
33-10-05 05	M12883-40-19
33-10-05 07	M12883-40-19
33-10-05 08	M12883-40-19
33-10-05 09	M12883-40-19
33-10-05 11	M12883-40-19
33-10-20 04	M12883-40-19
33-10-20 07	M12883-40-19
33-10-20 08	M12883-40-19
33-10-05 05	M400-1265
33-10-05 07	M400-1265
33-10-05 08	M400-1265
33-10-05 09	M400-1265
33-10-05 11	M400-1265
33-10-20 04	M400-1265
33-10-20 07	M400-1265
33-10-20 08	M400-1265
DC-DB	
28-41-20 03	2TP1-3
DC-DB	
28-41-20 03	2TP1-3M
DC-GG	
24-50-01 05	CV7313
24-50-01 06	CV7313
24-50-01 07	CV7313
DD-CC	
30-20-10 02	C9032-001A
31-50-01 04	C9032-001B
31-50-01 07	C9032-001B
31-50-01 08	C9032-001B
31-50-01 09	C9032-001B
31-50-01 14	C9032-001B
DD-CC	
30-20-10 02	C9032-001B
DE-CC	
31-50-01 04	C9032-001B
31-50-01 07	C9032-001B
31-50-01 08	C9032-001B

IDENT CH-SECT-UNIT-FIG	PART NUMBER
DE-CC	
31-50-01 09	C9032-001B
31-50-01 14	C9032-001B
DE-DAB	
27-61-10 08	M12883-40-19
33-10-05 05	M12883-40-19
33-10-05 07	M12883-40-19
33-10-05 08	M12883-40-19
33-10-05 09	M12883-40-19
33-10-05 11	M12883-40-19
33-10-20 04	M12883-40-19
33-10-20 07	M12883-40-19
33-10-20 08	M12883-40-19
27-61-10 08	M400-1265
33-10-05 05	M400-1265
33-10-05 07	M400-1265
33-10-05 08	M400-1265
33-10-05 09	M400-1265
33-10-05 11	M400-1265
33-10-20 04	M400-1265
33-10-20 07	M400-1265
33-10-20 08	M400-1265
DE-DB	
28-41-10 02	2TP1-1
28-41-10 03	2TP1-1
DE-DB	
28-41-10 02	2TP1-1M
28-41-10 03	2TP1-1M
DF	
28-41-10 02	422250-17
28-41-10 03	422250-17
28-41-20 03	422250-17
28-41-30 02	422250-17
DF-CC	
31-50-01 04	C9032-001B
31-50-01 07	C9032-001B
31-50-01 08	C9032-001B
31-50-01 09	C9032-001B
31-50-01 14	C9032-001B
DG	
21-30-10 02	422255-8
21-30-10 04	422255-8
21-60-10 08	422255-8
21-60-10 10	422255-8
21-60-10 11	422255-8
21-60-20 02	422255-8
21-60-20 03	422255-8
24-21-17 03	422255-8
24-21-17 04	422255-8
24-30-10 02	422255-8
24-50-01 05	422255-8

IDENT CH-SECT-UNIT-FIG	PART NUMBER
DG	
24-50-01 06	422255-8
24-50-01 07	422255-8
26-10-10 03	422255-8
26-10-30 03	422255-8
26-20-10 03	422255-8
27-24-10 02	422255-8
27-24-10 03	422255-8
28-40-20 02	422255-8
28-40-40 02	422255-8
29-32-10 05	422255-8
30-20-10 02	422255-8
30-30-20 02	422255-8
31-20-35 02	422255-8
31-20-35 03	422255-8
32-60-10 04	422255-8
32-60-30 02	422255-8
32-60-30 03	422255-8
33-30-05 07	422255-8
33-30-05 08	422255-8
33-40-10 05	422255-8
33-40-10 06	422255-8
49-60-30 08	422255-8
49-60-30 09	422255-8
49-60-30 11	422255-8
73-20-01 05	422255-8
73-20-10 03	422255-8
77-10-10 02	422255-8
78-30-05 01	422255-8
78-30-05 02	422255-8
79-30-10 02	422255-8
80-10-10 04	422255-8
DG-CC	
31-50-01 04	C9032-001B
31-50-01 07	C9032-001B
31-50-01 08	C9032-001B
31-50-01 09	C9032-001B
31-50-01 14	C9032-001B
DG-DA	
31-20-60 02	422255-8
DG-DAB	
30-40-15 07	M12883-40-19
30-40-15 10	M12883-40-19
30-40-15 11	M12883-40-19
30-40-15 12	M12883-40-19
73-20-10 03	M12883-40-19
30-40-15 07	M400-1265
30-40-15 10	M400-1265
30-40-15 11	M400-1265
30-40-15 12	M400-1265
73-20-10 03	M400-1265

IDENT CH-SECT-UNIT-FIG	PART NUMBER
DG-DB	
28-41-30 02	2TP1-3
DGE-P	
27-24-10 02	MTC100KT2-1103
27-24-10 03	MTC100KT2-1103
30-20-10 02	MTC100KT2-1103
31-20-35 02	MTC100KT2-1103
32-60-10 04	MTC100KT2-1103
73-20-01 05	MTC100KT2-1103
77-10-10 02	MTC100KT2-1103
79-30-10 02	MTC100KT2-1103
80-10-10 04	MTC100KT2-1103
27-24-10 02	MTC100KT2-1104
27-24-10 03	MTC100KT2-1104
30-20-10 02	MTC100KT2-1104
31-20-35 02	MTC100KT2-1104
32-60-10 04	MTC100KT2-1104
73-20-01 05	MTC100KT2-1104
77-10-10 02	MTC100KT2-1104
79-30-10 02	MTC100KT2-1104
80-10-10 04	MTC100KT2-1104
27-24-10 02	MTC100YH2-009
27-24-10 03	MTC100YH2-009
30-20-10 02	MTC100YH2-009
31-20-35 02	MTC100YH2-009
32-60-10 04	MTC100YH2-009
73-20-01 05	MTC100YH2-009
77-10-10 02	MTC100YH2-009
79-30-10 02	MTC100YH2-009
80-10-10 04	MTC100YH2-009
DGE-P	
27-24-10 03	MTC100YC1-003
30-20-10 02	MTC100YC1-003
32-60-10 04	MTC100YC1-003
73-20-01 05	MTC100YC1-003
77-10-10 02	MTC100YC1-003
79-30-10 02	MTC100YC1-003
80-10-10 04	MTC100YC1-003
27-24-10 03	MTC100YC1-004
30-20-10 02	MTC100YC1-004
32-60-10 04	MTC100YC1-004
73-20-01 05	MTC100YC1-004
77-10-10 02	MTC100YC1-004
79-30-10 02	MTC100YC1-004
80-10-10 04	MTC100YC1-004
27-24-10 03	MTC100YH2-009
30-20-10 02	MTC100YH2-009
32-60-10 04	MTC100YH2-009
73-20-01 05	MTC100YH2-009
77-10-10 02	MTC100YH2-009
79-30-10 02	MTC100YH2-009

IDENT CH-SECT-UNIT-FIG	PART NUMBER
DGE-P	
80-10-10 04	MTC100YH2-009
DGE-R	
27-24-10 02	MTC100KT2-1101
27-24-10 03	MTC100KT2-1101
30-20-10 02	MTC100KT2-1101
31-20-35 02	MTC100KT2-1101
32-60-10 04	MTC100KT2-1101
73-20-01 05	MTC100KT2-1101
77-10-10 02	MTC100KT2-1101
79-30-10 02	MTC100KT2-1101
80-10-10 04	MTC100KT2-1101
27-24-10 02	MTC100KT2-1102
27-24-10 03	MTC100KT2-1102
30-20-10 02	MTC100KT2-1102
31-20-35 02	MTC100KT2-1102
32-60-10 04	MTC100KT2-1102
73-20-01 05	MTC100KT2-1102
77-10-10 02	MTC100KT2-1102
79-30-10 02	MTC100KT2-1102
80-10-10 04	MTC100KT2-1102
27-24-10 02	MTC100YH2-010
27-24-10 03	MTC100YH2-010
30-20-10 02	MTC100YH2-010
31-20-35 02	MTC100YH2-010
32-60-10 04	MTC100YH2-010
73-20-01 05	MTC100YH2-010
77-10-10 02	MTC100YH2-010
79-30-10 02	MTC100YH2-010
80-10-10 04	MTC100YH2-010
DGE-R	
27-24-10 03	MTC100YC1-001
30-20-10 02	MTC100YC1-001
32-60-10 04	MTC100YC1-001
73-20-01 05	MTC100YC1-001
77-10-10 02	MTC100YC1-001
79-30-10 02	MTC100YC1-001
80-10-10 04	MTC100YC1-001
27-24-10 03	MTC100YC1-002
30-20-10 02	MTC100YC1-002
32-60-10 04	MTC100YC1-002
73-20-01 05	MTC100YC1-002
77-10-10 02	MTC100YC1-002
79-30-10 02	MTC100YC1-002
80-10-10 04	MTC100YC1-002
27-24-10 03	MTC100YH2-010
30-20-10 02	MTC100YH2-010
32-60-10 04	MTC100YH2-010
73-20-01 05	MTC100YH2-010
77-10-10 02	MTC100YH2-010
79-30-10 02	MTC100YH2-010

IDENT CH-SECT-UNIT-FIG	PART NUMBER
DGE-R	
80-10-10 04	MTC100YH2-010
DGF-P	
27-24-10 02	MTC100KT2-1103
27-24-10 03	MTC100KT2-1103
29-32-10 05	MTC100KT2-1103
30-20-10 02	MTC100KT2-1103
31-20-35 02	MTC100KT2-1103
31-20-35 03	MTC100KT2-1103
77-10-10 02	MTC100KT2-1103
79-30-10 02	MTC100KT2-1103
80-10-10 04	MTC100KT2-1103
27-24-10 02	MTC100KT2-1104
27-24-10 03	MTC100KT2-1104
29-32-10 05	MTC100KT2-1104
30-20-10 02	MTC100KT2-1104
31-20-35 02	MTC100KT2-1104
31-20-35 03	MTC100KT2-1104
77-10-10 02	MTC100KT2-1104
79-30-10 02	MTC100KT2-1104
80-10-10 04	MTC100KT2-1104
27-24-10 02	MTC100YH2-009
27-24-10 03	MTC100YH2-009
29-32-10 05	MTC100YH2-009
30-20-10 02	MTC100YH2-009
31-20-35 02	MTC100YH2-009
31-20-35 03	MTC100YH2-009
77-10-10 02	MTC100YH2-009
79-30-10 02	MTC100YH2-009
80-10-10 04	MTC100YH2-009
DGF-P	
27-24-10 03	MTC100YC1-003
29-32-10 05	MTC100YC1-003
30-20-10 02	MTC100YC1-003
31-20-35 03	MTC100YC1-003
77-10-10 02	MTC100YC1-003
79-30-10 02	MTC100YC1-003
80-10-10 04	MTC100YC1-003
27-24-10 03	MTC100YC1-004
29-32-10 05	MTC100YC1-004
30-20-10 02	MTC100YC1-004
31-20-35 03	MTC100YC1-004
77-10-10 02	MTC100YC1-004
79-30-10 02	MTC100YC1-004
80-10-10 04	MTC100YC1-004
27-24-10 03	MTC100YH2-009
29-32-10 05	MTC100YH2-009
30-20-10 02	MTC100YH2-009
31-20-35 03	MTC100YH2-009
77-10-10 02	MTC100YH2-009
79-30-10 02	MTC100YH2-009

IDENT CH-SECT-UNIT-FIG	PART NUMBER
DGF-P	
80-10-10 04	MTC100YH2-009
DGF-R	
27-24-10 02	MTC100KT2-1101
27-24-10 03	MTC100KT2-1101
29-32-10 05	MTC100KT2-1101
30-20-10 02	MTC100KT2-1101
31-20-35 02	MTC100KT2-1101
31-20-35 03	MTC100KT2-1101
77-10-10 02	MTC100KT2-1101
79-30-10 02	MTC100KT2-1101
80-10-10 04	MTC100KT2-1101
27-24-10 02	MTC100KT2-1102
27-24-10 03	MTC100KT2-1102
29-32-10 05	MTC100KT2-1102
30-20-10 02	MTC100KT2-1102
31-20-35 02	MTC100KT2-1102
31-20-35 03	MTC100KT2-1102
77-10-10 02	MTC100KT2-1102
79-30-10 02	MTC100KT2-1102
80-10-10 04	MTC100KT2-1102
27-24-10 02	MTC100YH2-010
27-24-10 03	MTC100YH2-010
29-32-10 05	MTC100YH2-010
30-20-10 02	MTC100YH2-010
31-20-35 02	MTC100YH2-010
31-20-35 03	MTC100YH2-010
77-10-10 02	MTC100YH2-010
79-30-10 02	MTC100YH2-010
80-10-10 04	MTC100YH2-010
DGF-R	
27-24-10 03	MTC100YC1-001
29-32-10 05	MTC100YC1-001
30-20-10 02	MTC100YC1-001
31-20-35 03	MTC100YC1-001
77-10-10 02	MTC100YC1-001
79-30-10 02	MTC100YC1-001
80-10-10 04	MTC100YC1-001
27-24-10 03	MTC100YC1-002
29-32-10 05	MTC100YC1-002
30-20-10 02	MTC100YC1-002
31-20-35 03	MTC100YC1-002
77-10-10 02	MTC100YC1-002
79-30-10 02	MTC100YC1-002
80-10-10 04	MTC100YC1-002
27-24-10 03	MTC100YH2-010
29-32-10 05	MTC100YH2-010
30-20-10 02	MTC100YH2-010
31-20-35 03	MTC100YH2-010
77-10-10 02	MTC100YH2-010
79-30-10 02	MTC100YH2-010

IDENT CH-SECT-UNIT-FIG	PART NUMBER
DGF-R	
80-10-10 04	MTC100YH2-010
DH	
21-60-10 08	422254-9
21-60-10 10	422254-9
21-60-10 11	422254-9
24-30-20 02	422254-9
24-30-20 03	422254-9
24-50-01 05	422254-9
24-50-01 06	422254-9
24-50-01 07	422254-9
26-10-30 03	422254-9
26-20-10 03	422254-9
28-21-05 02	422254-9
28-21-05 03	422254-9
28-21-05 04	422254-9
28-41-10 02	422254-9
28-41-10 03	422254-9
30-30-20 02	422254-9
31-50-05 03	422254-9
33-50-10 09	422254-9
49-60-10 05	422254-9
49-60-30 06	422254-9
49-60-30 08	422254-9
49-60-30 09	422254-9
49-60-30 11	422254-9
73-20-01 05	422254-9
73-20-02 05	422254-9
73-20-10 03	422254-9
24-21-17 03	422255-9
24-21-17 04	422255-9
78-30-05 01	422255-9
78-30-05 02	422255-9
DH-C-P	
21-60-10 08	MTC100KT1-1103
21-60-10 10	MTC100KT1-1103
21-60-10 11	MTC100KT1-1103
21-60-10 08	MTC100KT1-1104
21-60-10 10	MTC100KT1-1104
21-60-10 11	MTC100KT1-1104
21-60-10 08	MTC100YH1-003
21-60-10 10	MTC100YH1-003
21-60-10 11	MTC100YH1-003
DH-C-P	
21-60-10 11	MTC100YC1-006
21-60-10 11	MTC100YH1-003
DH-C-R	
21-60-10 08	MTC100KT1-1101
21-60-10 10	MTC100KT1-1101
21-60-10 11	MTC100KT1-1101
21-60-10 08	MTC100KT1-1102

IDENT CH-SECT-UNIT-FIG	PART NUMBER
DH-C-R	
21-60-10 10	MTC100KT1-1102
21-60-10 11	MTC100KT1-1102
21-60-10 08	MTC100YH1-004
21-60-10 10	MTC100YH1-004
21-60-10 11	MTC100YH1-004
DH-C-R	
21-60-10 11	MTC100YC1-005
21-60-10 11	MTC100YH1-004
DH-CC	
31-50-01 04	C9032-001B
31-50-01 07	C9032-001B
31-50-01 08	C9032-001B
31-50-01 09	C9032-001B
31-50-01 14	C9032-001B
DH-DB	
28-41-30 02	2TP1-3
DHC-P	
73-20-01 05	MTC100KTI-1102
73-20-01 05	MTC100KT1-1101
73-20-02 05	MTC100KT1-1103
73-20-02 05	MTC100KT1-1104
73-20-01 05	MTC100YH1-003
73-20-02 05	MTC100YH1-003
DHC-P	
73-20-01 05	MTC100YC1-005
73-20-02 05	MTC100YC1-006
73-20-01 05	MTC100YH1-003
73-20-02 05	MTC100YH1-003
DHC-R	
73-20-01 05	MTC100KTI-1104
73-20-02 05	MTC100KT1-1101
73-20-02 05	MTC100KT1-1102
73-20-01 05	MTC100KT1-1103
73-20-01 05	MTC100YH1-004
73-20-02 05	MTC100YH1-004
DHC-R	
73-20-02 05	MTC100YC1-005
73-20-01 05	MTC100YC1-006
73-20-01 05	MTC100YH1-004
73-20-02 05	MTC100YH1-004
DHE-P	
49-60-10 05	MTC100KT2-1103
49-60-10 05	MTC100KT2-1104
49-60-10 05	MTC100YH2-009
DHE-P	
49-60-10 05	MTC100YC1-003
49-60-10 05	MTC100YC1-004
49-60-10 05	MTC100YH2-009
DHE-R	
49-60-10 05	MTC100KT2-1101

IDENT CH-SECT-UNIT-FIG	PART NUMBER
DHE-R	
49-60-10 05	MTC100KT2-1102
49-60-10 05	MTC100YH2-010
DHE-R	
49-60-10 05	MTC100YC1-001
49-60-10 05	MTC100YC1-002
49-60-10 05	MTC100YH2-010
DHF-P	
49-60-10 05	MTCR161-04S
DHF-R	
49-60-10 05	MTCR161-04P
DJ	
24-21-17 03	422255-7
24-21-17 04	422255-7
24-50-05 08	422255-7
24-50-05 11	422255-7
24-50-05 14	422255-7
24-50-05 15	422255-7
27-00-10 03	422255-7
27-00-10 04	422255-7
27-33-00 05	422255-7
27-33-00 07	422255-7
28-40-30 05	422255-7
30-40-15 07	422255-7
30-40-15 10	422255-7
30-40-15 11	422255-7
30-40-15 12	422255-7
30-40-20 03	422255-7
30-40-20 05	422255-7
32-60-10 04	422255-7
33-30-15 07	422255-7
33-40-10 05	422255-7
33-40-10 06	422255-7
77-20-10 02	422255-7
80-10-10 04	422255-7
DJ-CC	
31-50-01 04	C9032-001B
31-50-01 07	C9032-001B
31-50-01 08	C9032-001B
31-50-01 09	C9032-001B
31-50-01 14	C9032-001B
DJ-DAB	
73-20-10 03	M12883-41-16
73-20-10 03	M300-1264
DK	
21-60-10 08	CPT06E14-18S
21-60-10 10	CPT06E14-18S
21-60-10 11	CPT06E14-18S
21-60-10 08	617452-3
21-60-10 10	617452-3
21-60-10 11	617452-3

IDENT CH-SECT-UNIT-FIG	PART NUMBER
DK-CC	
31-50-01 04	C9032-001B
31-50-01 07	C9032-001B
31-50-01 08	C9032-001B
31-50-01 09	C9032-001B
31-50-01 14	C9032-001B
DK-DAB	
30-10-10 11	M300-1264
30-10-10 11	S00A1B0
DL	
21-30-10 02	HWBUN1146D10B
21-30-10 04	HWBUN1146D10B
21-60-10 08	HWBUN1146D10B
21-60-10 10	HWBUN1146D10B
21-60-10 11	HWBUN1146D10B
27-00-10 03	HWBUN1146D10B
27-00-10 04	HWBUN1146D10B
DL-CC	
31-50-01 04	C9032-001B
31-50-01 07	C9032-001B
31-50-01 08	C9032-001B
31-50-01 09	C9032-001B
31-50-01 14	C9032-001B
DL-DAB	
30-10-10 11	M300-1264
30-10-10 11	S00A1B0
DM	
33-30-05 07	1TP4-3
33-30-05 08	1TP4-3
DM-CC	
31-50-01 04	C9032-001B
31-50-01 07	C9032-001B
31-50-01 08	C9032-001B
31-50-01 09	C9032-001B
31-50-01 14	C9032-001B
DM-DAB	
33-30-15 07	M300-126A
33-30-15 07	S300A1A2
DN	
33-50-10 09	H1400
33-30-05 07	H1800C1
33-30-05 08	H1800C1
DN	
33-50-10 09	H1800C1
DN-CC	
31-50-01 04	C9032-001B
31-50-01 07	C9032-001B
31-50-01 08	C9032-001B
31-50-01 09	C9032-001B
31-50-01 14	C9032-001B
DP-CC	

IDENT CH-SECT-UNIT-FIG	PART NUMBER
DP-CC	
31-50-01 04	C9032-001B
31-50-01 07	C9032-001B
31-50-01 08	C9032-001B
31-50-01 09	C9032-001B
31-50-01 14	C9032-001B
DR-CC	
31-50-01 04	C9032-001B
31-50-01 07	C9032-001B
31-50-01 08	C9032-001B
31-50-01 09	C9032-001B
31-50-01 14	C9032-001B
DR-CD	
21-31-10 07	99-623
DS-CC	
31-50-01 04	C9032-001B
31-50-01 07	C9032-001B
31-50-01 08	C9032-001B
31-50-01 09	C9032-001B
31-50-01 14	C9032-001B
DT-CC	
31-50-01 04	C9032-001B
31-50-01 07	C9032-001B
31-50-01 08	C9032-001B
31-50-01 09	C9032-001B
31-50-01 14	C9032-001B
DT-CG	
26-10-10 03	WC1503
DU-CG	
26-10-10 03	WC1503
DV-CC	
31-50-01 14	C9032-001B
DV-CG	
26-10-20 02	WC1503
DW-CC	
31-50-01 14	C9032-001B
DW-CG	
26-10-30 03	WC1503
DX	
30-10-10 11	P067A075-800
E	
33-10-20 04	140-4537
33-10-20 08	140-4538
33-10-20 07	404-8-02811-007
E-AA	
33-10-20 04	E1250-003
E-AB	
33-10-20 04	E1250-003
E-CC	
28-40-30 05	9-328-26-002
E-CG-P	

IDENT CH-SECT-UNIT-FIG	PART NUMBER
E-CG-P	
26-20-10 03	MTC100KT1-1103
33-40-20 04	MTC100KT1-1103
26-20-10 03	MTC100KT1-1104
33-40-20 04	MTC100KT1-1104
26-20-10 03	MTC100YH1-003
33-40-20 04	MTC100YH1-003
E-CG-P	
26-20-10 03	MTC100YC1-006
33-40-20 04	MTC100YC1-006
26-20-10 03	MTC100YH1-003
33-40-20 04	MTC100YH1-003
E-CG-R	
33-40-20 04	MTC100KTI-1102
26-20-10 03	MTC100KT1-1101
33-40-20 04	MTC100KT1-1101
26-20-10 03	MTC100KT1-1102
26-20-10 03	MTC100YH1-004
33-40-20 04	MTC100YH1-004
E-CG-R	
26-20-10 03	MTC100YC1-005
33-40-20 04	MTC100YC1-005
26-20-10 03	MTC100YH1-004
33-40-20 04	MTC100YH1-004
E-DAB	
30-40-20 03	MR5-680RPM1PCT
30-40-20 05	MR5-680RPM1PCT
30-40-20 05	MO5-680R
30-40-20 05	TR5-680R
30-40-20 03	2TL1-7
30-40-20 05	2TL1-7
E-DAG	
30-40-15 07	652-1
30-40-15 12	652-2W
E-DAG	
30-40-15 10	652-2W
30-40-15 11	652-2W
E-DAG	
30-40-15 07	652-2W
E-DE	
49-60-10 05	4TL1-7
E-DR	
30-30-20 02	HSA50-68R
E-GA	
24-21-17 03	LDG150Y4
24-21-17 04	LDG150Y4
24-30-10 02	LDG150Y4
24-30-20 02	LDG150Y4
24-30-20 03	LDG150Y4
24-50-01 05	LDG150Y4
24-50-01 06	LDG150Y4

IDENT CH-SECT-UNIT-FIG	PART NUMBER
E-GA	
24-50-01 07	LDG150Y4
24-50-05 08	LDG150Y4
24-50-05 11	LDG150Y4
24-50-05 14	LDG150Y4
24-50-05 15	LDG150Y4
49-60-30 06	LDG150Y4
49-60-30 08	LDG150Y4
49-60-30 09	LDG150Y4
49-60-30 11	LDG150Y4
80-10-10 04	LDG150Y4
E-GG	
21-30-10 02	HWBUN1146D10B
21-30-10 04	HWBUN1146D10B
24-90-01 05	HWBUN1146D10B
24-90-01 06	HWBUN1146D10B
26-10-30 03	HWBUN1146D10B
27-00-10 03	HWBUN1146D10B
27-00-10 04	HWBUN1146D10B
30-20-10 02	HWBUN1146D10B
30-40-15 07	HWBUN1146D10B
30-40-15 10	HWBUN1146D10B
30-40-15 11	HWBUN1146D10B
30-40-15 12	HWBUN1146D10B
73-20-02 05	HWBUN1146D10B
79-30-10 02	HWBUN1146D10B
E-GG	
77-10-10 02	HWBUN1146D10B
77-10-10 02	1N4005
E-S-DAE	
33-10-20 04	HWBUN1736S10B
33-10-20 07	HWBUN1736S10B
33-10-20 08	HWBUN1736S10B
33-10-20 04	25-8NF405-503A
33-10-20 07	25-8NF405-503A
E-T-DAE	
33-10-20 04	HWBUN1736S10B
33-10-20 07	HWBUN1736S10B
33-10-20 08	HWBUN1736S10B
33-10-20 04	25-8NF407-503A
33-10-20 07	25-8NF407-503A
E-TQ	
49-60-10 05	1014-3PGCP16
E-U-DAE	
33-10-10 31	HWBUN1736S10B
33-10-20 04	HWBUN1736S10B
33-10-20 07	HWBUN1736S10B
33-10-20 08	HWBUN1736S10B
33-10-20 04	25-8NF409-503A
33-10-20 07	25-8NF409-503A
E-UC	

IDENT CH-SECT-UNIT-FIG	PART NUMBER
E-UC	
31-50-05 03	GE308
31-50-05 03	12-271
31-50-05 03	25-8FR445-1A
E-WX	
31-50-05 03	WC1503
E-X-DAE	
33-10-10 31	HWBUN1736S10B
E-XZ	
24-21-17 03	CV7313
24-21-17 04	CV7313
24-21-17 04	WBUN1502
E-Y-DAE	
33-10-20 04	HWBUN1736S10B
33-10-20 07	HWBUN1736S10B
33-10-20 08	HWBUN1736S10B
33-10-20 04	25-8NF397-503A
33-10-20 07	25-8NF397-503A
E-ZKA	
49-60-10 05	M12883-41-16
49-60-10 05	M300-1264
49-60-10 05	S0-1049-8309
E-ZL	
24-50-01 05	BAEREF000003234
24-50-01 06	BAEREF000003234
24-50-01 07	BAEREF000003234
24-50-01 05	SW06HHN400SUU9* 096
24-50-01 06	SW06HHN400SUU9* 096
24-50-01 07	SW06HHN400SUU9* 096
E-ZT	
21-60-10 11	M12883-41-16
21-60-10 11	M300-1264
E-ZZ	
49-60-10 05	HWBUN1146D10S
EA-CC	
31-50-01 04	C9032-001B
31-50-01 07	C9032-001B
31-50-01 08	C9032-001B
31-50-01 09	C9032-001B
31-50-01 14	C9032-001B
EA-CG	
30-40-15 07	1TP1-3
30-40-15 10	1TP1-3M
30-40-15 11	1TP1-3M
30-40-15 12	1TP1-3M
EA-CG	
30-40-15 07	1TP1-3M
EA-DAB	

IDENT CH-SECT-UNIT-FIG	PART NUMBER
EA-DAB	
24-30-10 02	M12883-41-16
24-30-10 02	M300-1264
EA-DB	
28-41-20 03	25-7NF893A
EB	
21-60-10 08	UNASSIGNED
21-60-10 10	UNASSIGNED
21-60-10 11	UNASSIGNED
EB-CC	
31-50-01 04	C9032-001B
31-50-01 07	C9032-001B
31-50-01 08	C9032-001B
31-50-01 09	C9032-001B
31-50-01 14	C9032-001B
EB-CG	
30-40-15 07	2TP1-3
30-40-20 03	2TP1-3
30-40-15 10	2TP1-3M
30-40-15 11	2TP1-3M
30-40-15 12	2TP1-3M
30-40-20 05	2TP1-3M
EB-CG	
30-40-15 07	2TP1-3M
30-40-20 03	2TP1-3M
EB-DAB	
24-30-20 02	M300-1264
24-30-20 03	M300-1264
24-30-20 02	S300-1AB0
24-30-20 03	S300-1AB0
EC	
21-60-10 08	25-6NF1453-17
21-60-10 10	25-6NF1453-17
21-60-10 11	25-6NF1453-17
EC-CC	
31-50-01 04	C9032-001B
31-50-01 07	C9032-001B
31-50-01 08	C9032-001B
31-50-01 09	C9032-001B
31-50-01 14	C9032-001B
EC-CG	
30-40-15 07	1TP1-3
30-40-15 10	1TP1-3M
30-40-15 11	1TP1-3M
30-40-15 12	1TP1-3M
EC-CG	
30-40-15 07	1TP1-3M
EC-DAB	
33-10-20 04	M12883-41-16
33-10-20 07	M12883-41-16
33-10-20 08	M12883-41-16

IDENT CH-SECT-UNIT-FIG	PART NUMBER
EC-DAB	
33-10-20 04	M300-1264
33-10-20 07	M300-1264
33-10-20 08	M300-1264
EC-DAJ	
21-31-10 07	CE216DE
EC-DAJ	
21-31-10 07	AS2294-4
21-31-10 07	JE102BKV
EC-DAJ	
21-31-10 07	AS2294-2
21-31-10 07	NLW25-50
ED-CC	
30-20-10 02	C9032-001A
31-50-01 04	C9032-001B
31-50-01 07	C9032-001B
31-50-01 08	C9032-001B
31-50-01 09	C9032-001B
31-50-01 14	C9032-001B
ED-CC	
30-20-10 02	C9032-001B
ED-CG	
30-40-15 07	2TP1-3
30-40-20 03	2TP1-3
30-40-15 10	2TP1-3M
30-40-15 11	2TP1-3M
30-40-15 12	2TP1-3M
30-40-20 05	2TP1-3M
ED-CG	
30-40-15 07	2TP1-3M
30-40-20 03	2TP1-3M
ED-DAB	
32-60-10 04	M12883-41-16
32-60-10 04	M300-1264
ED-DAJ	
21-31-10 07	CE216DE
ED-DAJ	
21-31-10 07	AS2294-4
21-31-10 07	JE102BKV
ED-DAJ	
21-31-10 07	AS2294-2
21-31-10 07	NLW25-50
EDF	
23-31-10 58	422250-17
23-31-10 65	422250-17
EE-CC	
31-50-01 04	C9032-001B
31-50-01 07	C9032-001B
31-50-01 08	C9032-001B
31-50-01 09	C9032-001B
31-50-01 14	C9032-001B

IDENT CH-SECT-UNIT-FIG	PART NUMBER
EE-CG	
27-24-10 02	2TP1-3
30-30-20 02	2TP1-3
30-30-31 02	2TP1-3
27-24-10 03	2TP1-3M
EE-CG	
27-24-10 02	2TP1-3M
30-30-20 02	2TP1-3M
EE-DAB	
30-30-10 02	M12883-41-16
30-80-10 02	M12883-41-16
30-80-10 03	M12883-41-16
32-60-30 02	M12883-41-16
32-60-30 03	M12883-41-16
30-30-10 02	M300-1264
30-80-10 02	M300-1264
30-80-10 03	M300-1264
32-60-30 02	M300-1264
32-60-30 03	M300-1264
EE-DAJ	
21-31-10 07	CE216DE
EE-DAJ	
21-31-10 07	AS2294-4
21-31-10 07	JE102BKV
EE-DAJ	
21-31-10 07	AS2294-2
21-31-10 07	NLW25-50
EF	
33-20-10 10	HWBUN1146D10B
EF-CC	
31-50-01 04	C9032-001B
31-50-01 07	C9032-001B
31-50-01 08	C9032-001B
31-50-01 09	C9032-001B
31-50-01 14	C9032-001B
EF-CG	
27-24-10 02	2TP1-3
30-30-20 02	2TP1-3
30-30-31 02	2TP1-3
27-24-10 03	2TP1-3M
EF-CG	
27-24-10 02	2TP1-3M
30-30-20 02	2TP1-3M
EF-DAB	
27-61-10 03	M12883-41-16
27-61-10 04	M12883-41-16
27-61-10 08	M12883-41-16
27-61-10 03	M300-1264
27-61-10 04	M300-1264
27-61-10 08	M300-1264
EF-DAJ	

IDENT CH-SECT-UNIT-FIG	PART NUMBER
EF-DAJ	
31-50-01 04	5910-99-0124911
31-50-01 07	5910-99-0124911
31-50-01 08	5910-99-0124911
31-50-01 09	5910-99-0124911
31-50-01 14	5910-99-0124911
EG-CC	
31-50-01 04	C9032-001B
31-50-01 07	C9032-001B
31-50-01 08	C9032-001B
31-50-01 09	C9032-001B
31-50-01 14	C9032-001B
EG-CG	
30-30-31 02	2132-01-0017
33-10-05 05	2132-01-0017
33-10-05 07	2132-01-0017
33-10-05 08	2132-01-0017
33-10-05 09	2132-01-0017
33-10-05 11	2132-01-0017
EG-DAB	
34-13-01 04	M12883-41-16
34-13-01 08	M12883-41-16
34-13-01 04	M300-1264
34-13-01 08	M300-1264
EG-DAJ	
31-50-01 04	5910-99-0124911
31-50-01 07	5910-99-0124911
31-50-01 08	5910-99-0124911
31-50-01 09	5910-99-0124911
31-50-01 14	5910-99-0124911
EH-CC	
31-50-01 04	C9032-001B
31-50-01 07	C9032-001B
31-50-01 08	C9032-001B
31-50-01 09	C9032-001B
31-50-01 14	C9032-001B
EH-DAJ	
34-13-01 04	5910-99-0124911
34-13-01 08	5910-99-0124911
EJ-CC	
31-50-01 04	C9032-001B
31-50-01 07	C9032-001B
31-50-01 08	C9032-001B
31-50-01 09	C9032-001B
31-50-01 14	C9032-001B
EJ-DAB	
30-10-10 11	M300-1264
30-10-10 11	S00A1B0
EK-CC	
31-50-01 04	C9032-001B
31-50-01 07	C9032-001B

IDENT CH-SECT-UNIT-FIG	PART NUMBER
EK-CC	
31-50-01 08	C9032-001B
31-50-01 09	C9032-001B
31-50-01 14	C9032-001B
EK-CG	
24-50-01 05	2TP1-3
24-50-01 06	2TP1-3
24-50-01 07	2TP1-3
EK-CG	
24-50-01 06	2TP1-3M
24-50-01 07	2TP1-3M
EK-DAB	
30-10-10 11	M300-1264
30-10-10 11	S00A1B0
EL-CC	
31-50-01 04	C9032-001B
31-50-01 07	C9032-001B
31-50-01 08	C9032-001B
31-50-01 09	C9032-001B
31-50-01 14	C9032-001B
EL-CG	
24-50-01 05	2TP1-3
24-50-01 06	2TP1-3
24-50-01 07	2TP1-3
EL-CG	
24-50-01 06	2TP1-3M
24-50-01 07	2TP1-3M
EL-DAB	
24-21-17 03	M301D4F
24-21-17 04	M301D4F
24-21-17 03	S300B1B0
24-21-17 04	S300B1B0
EL-DAJ	
30-10-10 11	5910-99-0130515
EM-CC	
31-50-01 04	C9032-001B
31-50-01 07	C9032-001B
31-50-01 08	C9032-001B
31-50-01 09	C9032-001B
31-50-01 14	C9032-001B
EM-DAB	
24-21-17 03	M301D4F
24-21-17 04	M301D4F
24-21-17 03	S300B1B0
24-21-17 04	S300B1B0
EN-CC	
31-50-01 04	C9032-001B
31-50-01 07	C9032-001B
31-50-01 08	C9032-001B
31-50-01 09	C9032-001B
31-50-01 14	C9032-001B

IDENT CH-SECT-UNIT-FIG	PART NUMBER
EN-CG	
24-50-01 05	4TP1-10
24-50-01 06	4TP1-10
24-50-01 07	4TP1-10
80-10-10 04	4TP1-10
EN-CG	
24-50-01 06	4TP1-10M
24-50-01 07	4TP1-10M
80-10-10 04	4TP1-10M
EP	
27-30-10 07	HWBUN1736D5B
27-30-10 08	HWBUN1736D5B
27-30-10 07	25-8NF841-1A
27-30-10 08	25-8NF841-1A
EP-CC	
31-50-01 04	C9032-001B
31-50-01 07	C9032-001B
31-50-01 08	C9032-001B
31-50-01 09	C9032-001B
31-50-01 14	C9032-001B
ER	
22-10-40 53	422252-12
27-30-10 07	422252-12
27-30-10 08	422252-12
ER-CC	
31-50-01 04	C9032-001B
31-50-01 07	C9032-001B
31-50-01 08	C9032-001B
31-50-01 09	C9032-001B
31-50-01 14	C9032-001B
ER-CG	
80-10-10 04	2D33
ERLH	
23-31-10 58	25-8FC919-1A
23-31-10 65	25-8FC919-1A
ERNC	
34-30-10 53	DMN1-2
ES-CG	
24-50-01 05	1TP1-1
24-50-01 06	1TP1-1
24-50-01 07	1TP1-1
ES-CG	
24-50-01 06	1TP1-1M
24-50-01 07	1TP1-1M
ET	
21-60-10 08	HWBUN1146D3B
21-60-10 10	HWBUN1146D3B
21-60-10 11	HWBUN1146D3B
21-60-20 02	HWBUN1146D3B
21-60-20 03	HWBUN1146D3B
ET-CC	

IDENT CH-SECT-UNIT-FIG	PART NUMBER
ET-CC	
31-50-01 04	C9032-001B
31-50-01 07	C9032-001B
31-50-01 08	C9032-001B
31-50-01 09	C9032-001B
31-50-01 14	C9032-001B
ET-CG	
27-33-00 05	WC1503
27-33-00 07	WC1503
EU-CG	
27-33-00 05	WC1503
27-33-00 07	WC1503
EV-CG	
27-33-00 05	WC1503
27-33-00 07	WC1503
EW-CG	
34-13-01 04	WC1503
EX-CG	
34-13-01 04	WC1503
EZ-CG	
27-61-20 04	WC1503
E2B	
33-10-05 05	L1338
33-10-05 07	L1338
33-10-05 08	L1338
33-10-05 09	L1338
33-10-05 11	L1338
E217	
34-30-10 53	37X2
E217	
34-30-10 53	17-5C
E422	
34-30-10 53	422254-10
F-AA	
33-10-20 04	E1250-003
F-AB	
33-10-05 05	E1250-003
33-10-05 07	E1250-003
F-CG-P	
26-10-10 03	MTC100KT1-1103
26-20-10 03	MTC100KT1-1103
33-40-20 04	MTC100KT1-1103
26-10-10 03	MTC100KT1-1104
26-20-10 03	MTC100KT1-1104
33-40-20 04	MTC100KT1-1104
26-10-10 03	MTC100YH1-003
26-20-10 03	MTC100YH1-003
33-40-20 04	MTC100YH1-003
F-CG-P	
26-10-10 03	MTC100YC1-006
26-20-10 03	MTC100YC1-006

IDENT CH-SECT-UNIT-FIG	PART NUMBER
F-CG-P	
33-40-20 04	MTC100YC1-006
26-10-10 03	MTC100YH1-003
26-20-10 03	MTC100YH1-003
33-40-20 04	MTC100YH1-003
F-CG-R	
33-40-20 04	MTC100KTI-1102
26-10-10 03	MTC100KT1-1101
26-20-10 03	MTC100KT1-1101
33-40-20 04	MTC100KT1-1101
26-10-10 03	MTC100KT1-1102
26-20-10 03	MTC100KT1-1102
26-10-10 03	MTC100YH1-004
26-20-10 03	MTC100YH1-004
33-40-20 04	MTC100YH1-004
F-CG-R	
26-10-10 03	MTC100YC1-005
26-20-10 03	MTC100YC1-005
33-40-20 04	MTC100YC1-005
26-10-10 03	MTC100YH1-004
26-20-10 03	MTC100YH1-004
33-40-20 04	MTC100YH1-004
F-CY	
31-50-01 04	25-8NF615-1A
31-50-01 07	25-8NF615-1A
31-50-01 08	25-8NF615-1A
31-50-01 09	25-8NF615-1A
31-50-01 14	25-8NF615-1A
F-DAB	
30-40-15 07	MR5-680RPM1PCT
30-40-15 10	MR5-680RPM1PCT
30-40-15 11	MR5-680RPM1PCT
30-40-15 12	MR5-680RPM1PCT
30-40-15 07	TR5-680R
30-40-15 10	TR5-680R
30-40-15 11	TR5-680R
30-40-15 12	TR5-680R
30-40-15 07	2TL1-7
30-40-15 10	2TL1-7
30-40-15 11	2TL1-7
30-40-15 12	2TL1-7
F-DAG	
30-40-15 07	652-1
30-40-15 12	652-2W
F-DAG	
30-40-15 10	652-2W
30-40-15 11	652-2W
F-DAG	
30-40-15 07	652-2W
F-DR	
30-30-20 02	WC1503

IDENT CH-SECT-UNIT-FIG	PART NUMBER
F-UC	
31-50-05 03	30-231-15
F-WX	
31-50-05 03	WC1503
FA-CG	
30-30-31 02	IS13247-2
FA-DAB	
30-40-15 07	M12883-48-02
30-40-15 10	M12883-48-02
30-40-15 11	M12883-48-02
30-40-15 12	M12883-48-02
30-40-15 07	M500-1383
30-40-15 10	M500-1383
30-40-15 11	M500-1383
30-40-15 12	M500-1383
FB	
33-30-05 07	03-0033
33-30-05 08	03-0033
FB-CG	
31-50-01 04	C9032-001B
31-50-01 07	C9032-001B
31-50-01 08	C9032-001B
31-50-01 09	C9032-001B
31-50-01 14	C9032-001B
FC-CG	
31-50-01 04	C9032-001B
31-50-01 07	C9032-001B
31-50-01 08	C9032-001B
31-50-01 09	C9032-001B
31-50-01 14	C9032-001B
FC-DAB	
30-40-15 07	M12883-48-02
30-40-15 10	M12883-48-02
30-40-15 11	M12883-48-02
30-40-15 12	M12883-48-02
30-40-15 07	M500-1383
30-40-15 10	M500-1383
30-40-15 11	M500-1383
30-40-15 12	M500-1383
FD-CG	
31-50-01 04	C9032-001B
31-50-01 07	C9032-001B
31-50-01 08	C9032-001B
31-50-01 09	C9032-001B
31-50-01 14	C9032-001B
FE-CG	
31-50-01 04	C9032-001B
31-50-01 07	C9032-001B
31-50-01 08	C9032-001B
31-50-01 09	C9032-001B
31-50-01 14	C9032-001B

IDENT CH-SECT-UNIT-FIG	PART NUMBER
FE-DAJ	
30-30-20 02	M12883-41-16
30-30-20 02	M300-1264
FF-DAJ	
30-30-20 02	M12883-41-16
30-30-20 02	M300-1264
FFA	
33-30-05 07	02-1117
FFB	
33-30-05 07	02-1117
FFC	
33-30-05 07	02-1117
FFD	
33-30-05 07	02-1117
FFE	
33-30-05 07	02-1117
FFF	
33-30-05 07	02-1117
FG-CC	
31-50-01 14	C9032-001B
FG-CG	
30-30-31 02	8A36-01-2-2N
FG-DAB	
30-30-10 02	M12883-41-16
30-30-10 02	M300-1264
FH-DAB	
34-13-01 04	M12883-41-16
34-13-01 08	M12883-41-16
34-13-01 04	M300-1264
34-13-01 08	M300-1264
FH627-1	
23-31-20 52	BZT03C12
23-31-20 52	HWBUN1154D5B
23-31-20 52	5920-99-0120072
23-31-20 52	5920-99-0120074
FH627-2	
23-31-20 52	HWBUN1154D5B
FJ-DAB	
30-30-31 02	770-537
FK-CG	
30-30-31 02	IS13247-2
FL-DAB	
30-30-31 02	770-537
FL212	
34-30-10 53	LC04B
FP	
33-20-10 10	HWBUN1146D10B
FR-CG	
80-10-10 04	2D72
FS-CG	
80-10-10 04	2D72

IDENT CH-SECT-UNIT-FIG	PART NUMBER
FT-CG	
21-31-10 07	WC1503
FU	
33-30-05 07	HWBUN1736D10B
FU-CG	
30-80-10 02	WC1503
30-80-10 03	WC1503
FV	
21-20-10 03	AE4559MK1
FV-CG	
34-13-01 04	WC1503
34-13-01 08	WC1503
FW	
21-20-10 03	HWBUN1146D58
FW-CG	
34-13-01 04	WC1503
34-13-01 08	WC1503
FX	
21-20-10 03	HTE9178
21-20-10 03	6026-10-6SNCON* DD
FY	
21-20-10 03	HTE9178
21-20-10 03	6026-10-6SNCON* DD
FY-CG	
34-13-01 04	WC1503
34-13-01 08	WC1503
FZ	
26-10-20 02	CG7PT
FZ-CG	
34-13-01 04	WC1503
34-13-01 08	WC1503
FZ-R	
26-10-20 02	PVWR610-6SNS57
26-10-20 02	125REF000000425
26-10-20 02	8525-16R10B6SN* 002
F1-AA	
33-10-20 04	5920-99-0120076
33-10-20 07	5920-99-0120076
33-10-20 08	5920-99-0120076
F1-AB	
33-10-20 04	5920-99-0120076
33-10-20 07	5920-99-0120076
33-10-20 08	5920-99-0120076
F1-DAC	
24-50-05 14	SPARE
31-50-05 03	5920-99-0120075
F1-GA	
24-50-01 05	5920-99-0120076

IDENT CH-SECT-UNIT-FIG	PART NUMBER
F1-GA	
24-50-01 06	5920-99-0120076
24-50-01 07	5920-99-0120076
24-50-05 08	5920-99-0120076
24-50-05 11	5920-99-0120076
24-50-05 14	5920-99-0120076
24-50-05 15	5920-99-0120076
F1-GG	
24-50-05 08	5920-99-0120074
24-50-05 11	5920-99-0120074
24-50-05 14	5920-99-0120074
24-50-05 15	5920-99-0120074
30-40-15 07	5920-99-0120074
30-40-15 10	5920-99-0120074
30-40-15 11	5920-99-0120074
30-40-15 12	5920-99-0120074
F1-XZ	
24-50-05 08	SPARE
24-30-10 02	5920-99-0120075
24-50-05 11	5920-99-0120075
24-50-05 14	5920-99-0120075
24-50-05 15	5920-99-0120075
F1-ZK	
24-50-05 08	5920-99-0120075
24-50-05 11	5920-99-0120075
24-50-05 14	5920-99-0120075
24-50-05 15	5920-99-0120075
29-32-10 05	5920-99-0120075
F1-ZKA	
24-50-05 08	SPARE
24-50-05 11	5920-99-0120076
24-50-05 14	5920-99-0120076
24-50-05 15	5920-99-0120076
49-60-10 05	5920-99-0120076
49-60-30 06	5920-99-0120076
49-60-30 08	5920-99-0120076
49-60-30 09	5920-99-0120076
49-60-30 11	5920-99-0120076
F1-ZL	
24-50-01 05	5920-99-0120076
24-50-01 06	5920-99-0120076
24-50-01 07	5920-99-0120076
24-50-05 08	5920-99-0120076
24-50-05 11	5920-99-0120076
24-50-05 14	5920-99-0120076
24-50-05 15	5920-99-0120076
33-30-05 07	5920-99-0120076
33-30-05 08	5920-99-0120076
F10-DAC	
24-50-05 08	5920-99-0120076
24-50-05 11	5920-99-0120076

IDENT CH-SECT-UNIT-FIG	PART NUMBER
F10-DAC	
24-50-05 14	5920-99-0120076
24-50-05 15	5920-99-0120076
33-10-20 04	5920-99-0120076
33-10-20 07	5920-99-0120076
33-10-20 08	5920-99-0120076
F10-GG	
24-50-05 08	5920-99-0120074
24-50-05 11	5920-99-0120074
24-50-05 14	5920-99-0120074
24-50-05 15	5920-99-0120074
30-40-15 07	5920-99-0120074
30-40-15 10	5920-99-0120074
30-40-15 11	5920-99-0120074
30-40-15 12	5920-99-0120074
F10-ZJ	
31-50-05 03	5920-99-0120075
F10-ZK	
24-50-05 08	5920-99-0120075
24-50-05 11	5920-99-0120075
24-50-05 14	5920-99-0120075
24-50-05 15	5920-99-0120075
77-20-10 02	5920-99-0120075
F10-ZKA	
24-50-05 08	SPARE
24-50-05 11	5920-99-0120075
24-50-05 14	5920-99-0120075
24-50-05 15	5920-99-0120075
49-60-10 05	5920-99-0120075
F10-ZL	
24-30-10 02	5920-99-0120075
24-50-01 05	5920-99-0120075
24-50-01 06	5920-99-0120075
24-50-01 07	5920-99-0120075
24-50-05 08	5920-99-0120075
24-50-05 11	5920-99-0120075
24-50-05 14	5920-99-0120075
24-50-05 15	5920-99-0120075
F11-DAC	
24-50-01 05	5920-99-0120075
24-50-01 06	5920-99-0120075
24-50-01 07	5920-99-0120075
24-50-05 08	5920-99-0120075
24-50-05 11	5920-99-0120075
24-50-05 14	5920-99-0120075
24-50-05 15	5920-99-0120075
F11-GA	
24-50-01 05	L1330A500
24-50-01 06	L1330A500
24-50-01 07	L1330A500
24-50-05 08	L1330A500

IDENT CH-SECT-UNIT-FIG	PART NUMBER
F11-GA	
24-50-05 11	L1330A500
24-50-05 14	L1330A500
24-50-05 15	L1330A500
F11-ZK	
24-50-05 08	SPARE
24-50-05 11	SPARE
24-50-05 14	SPARE
24-50-05 15	SPARE
49-60-30 06	5920-99-0120075
49-60-30 08	5920-99-0120075
49-60-30 09	5920-99-0120075
49-60-30 11	5920-99-0120075
F11-ZL	
24-50-05 08	5920-99-0120075
24-50-05 11	5920-99-0120075
24-50-05 14	5920-99-0120075
24-50-05 15	5920-99-0120075
26-10-10 03	5920-99-0120075
F12-DAC	
24-50-05 08	5920-99-0120075
24-50-05 11	5920-99-0120075
24-50-05 14	5920-99-0120075
24-50-05 15	5920-99-0120075
30-30-10 02	5920-99-0120075
F12-GA	
24-21-17 03	L133CA150
24-21-17 04	L133CA150
24-50-01 05	L133CA150
24-50-01 06	L133CA150
24-50-01 07	L133CA150
24-50-05 08	L1330A150
24-50-05 11	L1330A150
24-50-05 14	L1330A150
24-50-05 15	L1330A150
F12-ZK	
24-50-05 08	SPARE
24-50-05 11	SPARE
24-50-05 14	SPARE
24-50-05 15	SPARE
F12-ZL	
24-50-05 08	5920-99-0120075
24-50-05 11	5920-99-0120075
24-50-05 14	5920-99-0120075
24-50-05 15	5920-99-0120075
26-10-10 03	5920-99-0120075
F13-DAC	
27-61-20 04	5920-99-0120073
24-50-05 11	5920-99-0120075
F13-GA	
24-50-01 05	UAM100

IDENT CH-SECT-UNIT-FIG	PART NUMBER
F13-GA	
24-50-01 06	UAM100
24-50-01 07	UAM100
24-50-05 08	UAM100
24-50-05 11	UAM100
24-50-05 14	UAM100
24-50-05 15	UAM100
F13-ZK	
24-50-05 08	5920-99-0120075
24-50-05 11	5920-99-0120075
24-50-05 14	5920-99-0120075
24-50-05 15	5920-99-0120075
77-20-10 02	5920-99-0120075
F13-ZL	
24-50-05 08	5920-99-0120075
24-50-05 11	5920-99-0120075
24-50-05 14	5920-99-0120075
24-50-05 15	5920-99-0120075
28-21-05 02	5920-99-0120075
28-21-05 03	5920-99-0120075
28-21-05 04	5920-99-0120075
F14-DAC	
24-50-01 05	5920-99-0120076
24-50-01 06	5920-99-0120076
24-50-01 07	5920-99-0120076
24-50-05 08	5920-99-0120076
24-50-05 11	5920-99-0120076
24-50-05 14	5920-99-0120076
24-50-05 15	5920-99-0120076
F14-GA	
24-50-01 05	UAM100
24-50-01 06	UAM100
24-50-01 07	UAM100
24-50-05 08	UAM100
24-50-05 11	UAM100
24-50-05 14	UAM100
24-50-05 15	UAM100
F14-ZK	
24-50-05 08	5920-99-0120075
24-50-05 11	5920-99-0120075
24-50-05 14	5920-99-0120075
24-50-05 15	5920-99-0120075
77-20-10 02	5920-99-0120075
F14-ZL	
24-50-05 08	5920-99-0120075
24-50-05 11	5920-99-0120075
24-50-05 14	5920-99-0120075
24-50-05 15	5920-99-0120075
27-00-10 03	5920-99-0120075
27-00-10 04	5920-99-0120075
F15-DAC	

IDENT CH-SECT-UNIT-FIG	PART NUMBER
F15-DAC	
24-50-05 08	5920-99-0120075
24-50-05 11	5920-99-0120075
24-50-05 14	5920-99-0120075
24-50-05 15	5920-99-0120075
30-30-20 02	5920-99-0120075
F15-GA	
24-30-10 02	5920-99-0120075
24-50-05 08	5920-99-0120075
24-50-05 11	5920-99-0120075
24-50-05 14	5920-99-0120075
24-50-05 15	5920-99-0120075
F15-ZK	
24-50-05 08	5920-99-0120075
24-50-05 11	5920-99-0120075
24-50-05 14	5920-99-0120075
24-50-05 15	5920-99-0120075
77-10-10 02	5920-99-0120075
F15-ZL	
24-50-01 05	5920-99-0120074
24-50-01 06	5920-99-0120074
24-50-01 07	5920-99-0120074
24-50-05 08	5920-99-0120074
24-50-05 11	5920-99-0120074
24-50-05 14	5920-99-0120074
24-50-05 15	5920-99-0120074
F16-DAC	
24-50-05 08	5920-99-0120074
24-50-05 11	5920-99-0120074
24-50-05 14	5920-99-0120074
24-50-05 15	5920-99-0120074
27-33-00 05	5920-99-0120074
27-33-00 07	5920-99-0120074
F16-GA	
24-30-10 02	5920-99-0120075
24-50-01 05	5920-99-0120075
24-50-01 06	5920-99-0120075
24-50-01 07	5920-99-0120075
24-50-05 08	5920-99-0120075
24-50-05 11	5920-99-0120075
24-50-05 14	5920-99-0120075
24-50-05 15	5920-99-0120075
F16-ZK	
24-50-05 08	5920-99-0120075
24-50-05 11	5920-99-0120075
24-50-05 14	5920-99-0120075
24-50-05 15	5920-99-0120075
77-10-10 02	5920-99-0120075
F16-ZL	
24-50-05 08	5920-99-0120075
24-50-05 11	5920-99-0120075

IDENT CH-SECT-UNIT-FIG	PART NUMBER
F16-ZL	
24-50-05 14	5920-99-0120075
24-50-05 15	5920-99-0120075
28-40-40 02	5920-99-0120075
F17-DAC	
24-50-05 08	5920-99-0120076
24-50-05 11	5920-99-0120076
24-50-05 14	5920-99-0120076
24-50-05 15	5920-99-0120076
33-10-05 05	5920-99-0120076
33-10-05 07	5920-99-0120076
33-10-05 08	5920-99-0120076
33-10-05 09	5920-99-0120076
33-10-05 11	5920-99-0120076
F17-GA	
24-30-10 02	5920-99-0120075
24-50-05 08	5920-99-0120075
24-50-05 11	5920-99-0120075
24-50-05 14	5920-99-0120075
24-50-05 15	5920-99-0120075
F17-ZK	
24-50-05 08	5920-99-0120075
24-50-05 11	5920-99-0120075
24-50-05 14	5920-99-0120075
24-50-05 15	5920-99-0120075
77-10-10 02	5920-99-0120075
F17-ZL	
24-50-05 08	5920-99-0120075
24-50-05 11	5920-99-0120075
24-50-05 14	5920-99-0120075
24-50-05 15	5920-99-0120075
28-40-40 02	5920-99-0120075
F18-DAC	
24-50-05 08	5920-99-0120076
24-50-05 11	5920-99-0120076
24-50-05 14	5920-99-0120076
24-50-05 15	5920-99-0120076
33-10-05 05	5920-99-0120076
33-10-05 07	5920-99-0120076
33-10-05 08	5920-99-0120076
33-10-05 09	5920-99-0120076
33-10-05 11	5920-99-0120076
F18-ZK	
24-50-05 08	5920-99-0120075
24-50-05 11	5920-99-0120075
24-50-05 14	5920-99-0120075
24-50-05 15	5920-99-0120075
77-10-10 02	5920-99-0120075
F18-ZL	
24-50-01 05	5920-99-0120075
24-50-05 08	5920-99-0120075

IDENT CH-SECT-UNIT-FIG	PART NUMBER
F18-ZL	
24-50-05 11	5920-99-0120075
24-50-05 14	5920-99-0120075
F18-ZL	
24-50-05 15	SPARE
F19-DAC	
24-50-05 08	5920-99-0120075
24-50-05 11	5920-99-0120075
24-50-05 14	5920-99-0120075
24-50-05 15	5920-99-0120075
27-33-00 05	5920-99-0120075
27-33-00 07	5920-99-0120075
F19-ZK	
24-50-05 08	5920-99-0120075
24-50-05 11	5920-99-0120075
24-50-05 14	5920-99-0120075
24-50-05 15	5920-99-0120075
73-20-10 03	5920-99-0120075
F19-ZL	
24-50-01 05	5920-99-0120075
24-50-05 08	5920-99-0120075
24-50-05 11	5920-99-0120075
24-50-05 14	5920-99-0120075
F19-ZL	
24-50-05 15	SPARE
F2-AA	
33-10-20 04	5920-99-0120076
33-10-20 07	5920-99-0120076
33-10-20 08	5920-99-0120076
F2-AB	
33-10-20 04	5920-99-0120076
33-10-20 07	5920-99-0120076
33-10-20 08	5920-99-0120076
F2-DAC	
24-50-05 08	5920-99-0120075
24-50-05 11	5920-99-0120075
24-50-05 14	5920-99-0120075
24-50-05 15	5920-99-0120075
30-10-10 11	5920-99-0120075
F2-GA	
24-50-05 08	SPARE
24-50-05 11	SPARE
24-50-05 14	SPARE
24-50-05 15	SPARE
F2-GG	
24-50-05 08	5920-99-0120074
24-50-05 11	5920-99-0120074
24-50-05 14	5920-99-0120074
24-50-05 15	5920-99-0120074
30-40-15 07	5920-99-0120074
30-40-15 10	5920-99-0120074

IDENT CH-SECT-UNIT-FIG	PART NUMBER
F2-GG	
30-40-15 11	5920-99-0120074
30-40-15 12	5920-99-0120074
F2-XZ	
24-50-05 08	SPARE
24-30-20 02	5920-99-0120075
24-30-20 03	5920-99-0120075
24-50-05 11	5920-99-0120075
24-50-05 14	5920-99-0120075
24-50-05 15	5920-99-0120075
F2-ZJ	
31-50-05 03	5920-99-0120075
F2-ZK	
24-50-05 08	5920-99-0120075
24-50-05 11	5920-99-0120075
24-50-05 14	5920-99-0120075
24-50-05 15	5920-99-0120075
28-40-30 05	5920-99-0120075
F2-ZKA	
24-50-05 08	SPARE
49-60-30 06	5920-99-0120075
49-60-30 08	5920-99-0120075
49-60-30 09	5920-99-0120075
49-60-30 11	5920-99-0120075
24-50-05 11	5920-99-0120076
24-50-05 14	5920-99-0120076
24-50-05 15	5920-99-0120076
49-60-10 05	5920-99-0120076
F2-ZL	
24-50-01 05	5920-99-0120076
24-50-01 06	5920-99-0120076
24-50-01 07	5920-99-0120076
24-50-05 08	5920-99-0120076
24-50-05 11	5920-99-0120076
24-50-05 14	5920-99-0120076
24-50-05 15	5920-99-0120076
80-10-10 04	5920-99-0120076
F20-DAC	
24-50-05 08	5920-99-0120076
24-50-05 11	5920-99-0120076
24-50-05 14	5920-99-0120076
24-50-05 15	5920-99-0120076
33-10-05 05	5920-99-0120076
33-10-05 07	5920-99-0120076
33-10-05 08	5920-99-0120076
33-10-05 09	5920-99-0120076
33-10-05 11	5920-99-0120076
F20-ZK	
24-50-05 08	SPARE
24-50-05 11	SPARE
24-50-05 14	SPARE

IDENT CH-SECT-UNIT-FIG	PART NUMBER
F20-ZK	
24-50-05 15	SPARE
F20-ZL	
24-50-01 05	5920-99-0120075
24-50-05 08	5920-99-0120075
24-50-05 11	5920-99-0120075
24-50-05 14	5920-99-0120075
F20-ZL	
24-50-05 15	SPARE
F21-DAC	
24-53-10 06	5920-99-0120073
24-53-10 08	5920-99-0120073
27-33-00 05	5920-99-0120073
27-33-00 07	5920-99-0120073
F21-GA	
24-50-01 05	L1330A500
24-50-01 06	L1330A500
24-50-01 07	L1330A500
24-50-05 08	L1330A500
24-50-05 11	L1330A500
24-50-05 14	L1330A500
24-50-05 15	L1330A500
F21-ZK	
24-50-05 08	SPARE
24-50-05 11	5920-99-0120075
24-50-05 14	5920-99-0120075
24-50-05 15	5920-99-0120075
F21-ZL	
24-50-05 08	SPARE
24-50-05 11	SPARE
24-50-05 14	SPARE
24-50-05 15	SPARE
24-50-01 05	5920-99-0120075
24-50-01 06	5920-99-0120075
24-50-01 07	5920-99-0120075
F22-DAC	
24-21-17 03	5920-99-0120073
24-21-17 04	5920-99-0120073
24-53-10 06	5920-99-0120073
24-53-10 08	5920-99-0120073
F22-GA	
24-21-17 03	L133CA150
24-21-17 04	L133CA150
24-50-01 05	L133CA150
24-50-01 06	L133CA150
24-50-01 07	L133CA150
24-50-05 08	L1330A150
24-50-05 11	L1330A150
24-50-05 14	L1330A150
24-50-05 15	L1330A150
F22-ZK	

IDENT CH-SECT-UNIT-FIG	PART NUMBER
F22-ZK	
24-21-17 03	5920-00-0120075
24-21-17 04	5920-00-0120075
24-50-05 08	5920-99-0120075
24-50-05 11	5920-99-0120075
24-50-05 14	5920-99-0120075
24-50-05 15	5920-99-0120075
F22-ZL	
24-50-05 08	SPARE
24-50-05 11	SPARE
24-50-05 14	SPARE
24-50-05 15	SPARE
F23-DAC	
24-21-17 03	5920-99-0120073
24-21-17 04	5920-99-0120073
24-53-10 06	5920-99-0120073
24-53-10 08	5920-99-0120073
F23-GA	
24-50-01 05	UAM100
24-50-01 06	UAM100
24-50-01 07	UAM100
24-50-05 08	UAM100
24-50-05 11	UAM100
24-50-05 14	UAM100
24-50-05 15	UAM100
F23-ZK	
24-50-05 08	SPARE
24-50-05 11	SPARE
24-50-05 14	SPARE
24-50-05 15	SPARE
F23-ZL	
24-50-05 08	SPARE
24-50-05 11	SPARE
24-50-05 14	SPARE
24-50-05 15	SPARE
F24-DAC	
24-21-17 03	5920-99-0120073
24-21-17 04	5920-99-0120073
24-53-10 06	5920-99-0120073
24-53-10 08	5920-99-0120073
F24-GA	
24-50-01 05	UAM100
24-50-01 06	UAM100
24-50-01 07	UAM100
24-50-05 08	UAM100
24-50-05 11	UAM100
24-50-05 14	UAM100
24-50-05 15	UAM100
F24-ZK	
24-50-05 08	SPARE
24-50-05 11	SPARE

IDENT CH-SECT-UNIT-FIG	PART NUMBER
F24-ZK	
24-50-05 14	SPARE
24-50-05 15	SPARE
F24-ZL	
24-50-05 08	5920-99-0120075
24-50-05 11	5920-99-0120075
24-50-05 14	5920-99-0120075
24-50-05 15	5920-99-0120075
27-30-10 07	5920-99-0120075
27-30-10 08	5920-99-0120075
F25-GA	
24-30-20 02	5920-99-0120075
24-30-20 03	5920-99-0120075
24-50-05 08	5920-99-0120075
24-50-05 11	5920-99-0120075
24-50-05 14	5920-99-0120075
24-50-05 15	5920-99-0120075
F25-ZK	
24-50-05 08	SPARE
24-50-05 11	SPARE
24-50-05 14	SPARE
24-50-05 15	SPARE
F25-ZL	
24-50-01 05	5920-99-0120075
24-50-01 06	5920-99-0120075
24-50-01 07	5920-99-0120075
24-50-05 08	5920-99-0120075
24-50-05 11	5920-99-0120075
24-50-05 14	5920-99-0120075
24-50-05 15	5920-99-0120075
F26-GA	
24-30-20 02	5920-99-0120075
24-30-20 03	5920-99-0120075
24-50-01 05	5920-99-0120075
24-50-01 06	5920-99-0120075
24-50-01 07	5920-99-0120075
24-50-05 08	5920-99-0120075
24-50-05 11	5920-99-0120075
24-50-05 14	5920-99-0120075
24-50-05 15	5920-99-0120075
F26-ZK	
24-50-05 08	SPARE
24-50-05 11	SPARE
24-50-05 14	SPARE
24-50-05 15	SPARE
F26-ZL	
24-50-05 08	5920-99-0120075
24-50-05 11	5920-99-0120075
24-50-05 14	5920-99-0120075
24-50-05 15	5920-99-0120075
33-50-10 09	5920-99-0120075

IDENT CH-SECT-UNIT-FIG	PART NUMBER
F27-GA	
24-30-20 02	5920-99-0120075
24-30-20 03	5920-99-0120075
24-50-05 08	5920-99-0120075
24-50-05 11	5920-99-0120075
24-50-05 14	5920-99-0120075
24-50-05 15	5920-99-0120075
F27-ZK	
24-50-05 08	SPARE
24-50-05 14	SPARE
24-50-05 15	SPARE
24-50-05 11	5920-99-0120075
F27-ZL	
24-50-05 08	5920-99-0120075
24-50-05 11	5920-99-0120075
24-50-05 14	5920-99-0120075
24-50-05 15	5920-99-0120075
73-20-01 05	5920-99-0120075
F28-DAC	
33-30-15 07	5920-99-0120073
F28-GA	
24-30-10 02	5920-99-0120075
24-50-05 08	5920-99-0120075
24-50-05 11	5920-99-0120075
24-50-05 14	5920-99-0120075
24-50-05 15	5920-99-0120075
F28-ZK	
24-50-05 08	SPARE
24-50-05 11	SPARE
24-50-05 14	SPARE
24-50-05 15	SPARE
73-20-02 05	5920-99-0120075
F28-ZKA	
24-50-05 08	SPARE
49-60-30 06	5920-99-0120075
49-60-30 08	5920-99-0120075
49-60-30 09	5920-99-0120075
49-60-30 11	5920-99-0120075
F28-ZL	
24-50-05 08	5920-99-0120075
24-50-05 11	5920-99-0120075
24-50-05 14	5920-99-0120075
24-50-05 15	5920-99-0120075
F29-DAC	
33-30-15 07	5920-99-0120077
F29-GA	
24-50-01 05	5920-99-0120076
24-50-01 06	5920-99-0120076
24-50-01 07	5920-99-0120076
24-50-05 08	5920-99-0120076
24-50-05 11	5920-99-0120076

IDENT CH-SECT-UNIT-FIG	PART NUMBER
F29-GA	
24-50-05 14	5920-99-0120076
24-50-05 15	5920-99-0120076
F29-ZK	
24-50-05 08	SPARE
24-50-05 11	5920-99-0120075
24-50-05 14	5920-99-0120075
24-50-05 15	5920-99-0120075
F29-ZL	
24-50-05 08	5920-99-0120078
24-50-05 11	5920-99-0120078
24-50-05 14	5920-99-0120078
24-50-05 15	5920-99-0120078
73-20-10 03	5920-99-0120078
F3-AA	
33-10-20 04	5920-99-0120076
33-10-20 07	5920-99-0120076
33-10-20 08	5920-99-0120076
F3-AB	
33-10-20 04	5920-99-0120076
33-10-20 07	5920-99-0120076
33-10-20 08	5920-99-0120076
F3-DAC	
24-50-05 08	5920-99-0120075
24-50-05 11	5920-99-0120075
24-50-05 14	5920-99-0120075
24-50-05 15	5920-99-0120075
27-33-00 05	5920-99-0120075
27-33-00 07	5920-99-0120075
F3-GA	
24-50-05 08	SPARE
24-50-05 11	5920-99-0120075
24-50-05 14	5920-99-0120075
24-50-05 15	5920-99-0120075
49-60-10 05	5920-99-0120075
F3-GG	
24-50-05 08	5920-99-0120074
24-50-05 11	5920-99-0120074
24-50-05 14	5920-99-0120074
24-50-05 15	5920-99-0120074
30-40-15 07	5920-99-0120074
30-40-15 10	5920-99-0120074
30-40-15 11	5920-99-0120074
30-40-15 12	5920-99-0120074
F3-XZ	
24-50-05 08	SPARE
24-21-17 03	5920-99-0120075
24-21-17 04	5920-99-0120075
24-50-05 11	5920-99-0120075
24-50-05 14	5920-99-0120075
24-50-05 15	5920-99-0120075

IDENT CH-SECT-UNIT-FIG	PART NUMBER
F3-ZJ	
31-50-05 03	5920-99-0120075
F3-ZK	
24-50-05 08	SPARE
24-50-05 11	SPARE
24-50-05 14	SPARE
24-50-05 15	SPARE
F3-ZKA	
24-50-05 08	SPARE
24-50-05 11	5920-99-0120075
24-50-05 14	5920-99-0120075
24-50-05 15	5920-99-0120075
49-60-10 05	5920-99-0120075
49-60-30 06	5920-99-0120075
49-60-30 08	5920-99-0120075
49-60-30 09	5920-99-0120075
49-60-30 11	5920-99-0120075
F3-ZL	
24-50-05 08	5920-99-0120075
24-50-05 11	5920-99-0120075
24-50-05 14	5920-99-0120075
24-50-05 15	5920-99-0120075
33-50-10 09	5920-99-0120075
24-50-01 05	5920-99-0120076
24-50-01 06	5920-99-0120076
24-50-01 07	5920-99-0120076
F30-DAC	
33-30-15 07	5920-99-0120077
F30-GA	
24-30-20 02	5920-99-0120075
24-30-20 03	5920-99-0120075
24-50-05 08	5920-99-0120075
24-50-05 11	5920-99-0120075
24-50-05 14	5920-99-0120075
24-50-05 15	5920-99-0120075
F30-ZK	
24-21-17 03	5920-00-0120075
24-21-17 04	5920-00-0120075
24-50-05 08	5920-99-0120075
24-50-05 11	5920-99-0120075
24-50-05 14	5920-99-0120075
24-50-05 15	5920-99-0120075
F30-ZL	
24-50-01 05	5920-99-0120075
24-50-01 06	5920-99-0120075
24-50-01 07	5920-99-0120075
24-50-05 08	5920-99-0120075
24-50-05 11	5920-99-0120075
24-50-05 14	5920-99-0120075
24-50-05 15	5920-99-0120075
F31-GA	

IDENT CH-SECT-UNIT-FIG	PART NUMBER
F31-GA	
24-50-05 08	SPARE
24-50-05 11	SPARE
24-50-05 14	SPARE
24-50-05 15	SPARE
F31-ZK	
24-50-05 08	5920-99-0120075
24-50-05 11	5920-99-0120075
24-50-05 14	5920-99-0120075
24-50-05 15	5920-99-0120075
30-30-20 02	5920-99-0120075
F31-ZL	
24-50-01 05	UAM100
24-50-01 06	UAM100
24-50-01 07	UAM100
24-50-05 08	UAM100
24-50-05 11	UAM100
24-50-05 14	UAM100
24-50-05 15	UAM100
F32-ZK	
24-30-10 02	5920-99-0120075
24-50-05 08	5920-99-0120075
24-50-05 11	5920-99-0120075
24-50-05 14	5920-99-0120075
24-50-05 15	5920-99-0120075
F32-ZL	
24-50-01 05	UAM100
24-50-01 06	UAM100
24-50-01 07	UAM100
24-50-05 08	UAM100
24-50-05 11	UAM100
24-50-05 14	UAM100
24-50-05 15	UAM100
F33-ZK	
24-30-20 02	5920-99-0120075
24-30-20 03	5920-99-0120075
24-50-05 08	5920-99-0120075
24-50-05 11	5920-99-0120075
24-50-05 14	5920-99-0120075
24-50-05 15	5920-99-0120075
F33-ZL	
24-50-01 05	5920-99-0120075
24-50-01 06	5920-99-0120075
24-50-01 07	5920-99-0120075
24-50-05 08	5920-99-0120075
24-50-05 11	5920-99-0120075
24-50-05 14	5920-99-0120075
24-50-05 15	5920-99-0120075
F34-ZK	
24-50-05 08	5920-99-0120075
24-50-05 11	5920-99-0120075

IDENT CH-SECT-UNIT-FIG	PART NUMBER
F34-ZK	
24-50-05 14	5920-99-0120075
24-50-05 15	5920-99-0120075
32-60-30 02	5920-99-0120075
32-60-30 03	5920-99-0120075
F34-ZL	
24-50-01 05	5920-99-0120075
24-50-01 06	5920-99-0120075
24-50-01 07	5920-99-0120075
24-50-05 08	5920-99-0120075
24-50-05 11	5920-99-0120075
24-50-05 14	5920-99-0120075
24-50-05 15	5920-99-0120075
F35-ZK	
24-50-05 08	5920-99-0120075
24-50-05 11	5920-99-0120075
24-50-05 14	5920-99-0120075
24-50-05 15	5920-99-0120075
73-20-02 05	5920-99-0120075
F35-ZL	
24-50-01 05	5920-99-0120075
24-50-01 06	5920-99-0120075
24-50-01 07	5920-99-0120075
24-50-05 08	5920-99-0120075
24-50-05 11	5920-99-0120075
24-50-05 14	5920-99-0120075
24-50-05 15	5920-99-0120075
F36-ZK	
24-50-05 08	5920-99-0120075
24-50-05 11	5920-99-0120075
24-50-05 14	5920-99-0120075
24-50-05 15	5920-99-0120075
26-10-30 03	5920-99-0120075
F36-ZL	
24-50-01 05	5920-99-0120075
24-50-01 06	5920-99-0120075
24-50-01 07	5920-99-0120075
24-50-05 08	5920-99-0120075
24-50-05 11	5920-99-0120075
24-50-05 14	5920-99-0120075
24-50-05 15	5920-99-0120075
F37-ZK	
24-50-05 08	5920-99-0120075
24-50-05 11	5920-99-0120075
24-50-05 14	5920-99-0120075
24-50-05 15	5920-99-0120075
31-20-60 02	5920-99-0120075
F37-ZL	
24-50-05 08	5920-99-0120078
24-50-05 11	5920-99-0120078
24-50-05 14	5920-99-0120078

IDENT CH-SECT-UNIT-FIG	PART NUMBER
F37-ZL	
24-50-05 15	5920-99-0120078
73-20-10 03	5920-99-0120078
F38-ZK	
24-21-17 03	5920-00-0120075
24-21-17 04	5920-00-0120075
24-50-05 08	5920-99-0120075
24-50-05 11	5920-99-0120075
24-50-05 14	5920-99-0120075
24-50-05 15	5920-99-0120075
F39-ZK	
24-21-17 03	5920-00-0120075
24-21-17 04	5920-00-0120075
24-50-05 08	5920-99-0120075
24-50-05 11	5920-99-0120075
24-50-05 14	5920-99-0120075
24-50-05 15	5920-99-0120075
F4-AA	
33-10-20 04	5920-99-0120076
33-10-20 07	5920-99-0120076
33-10-20 08	5920-99-0120076
F4-AB	
33-10-20 04	5920-99-0120076
33-10-20 07	5920-99-0120076
33-10-20 08	5920-99-0120076
F4-DAC	
24-50-05 08	5920-99-0120075
24-50-05 11	5920-99-0120075
24-50-05 14	5920-99-0120075
24-50-05 15	5920-99-0120075
27-33-00 05	5920-99-0120075
27-33-00 07	5920-99-0120075
F4-GA	
24-50-05 08	SPARE
24-50-05 11	5920-99-0120075
24-50-05 14	5920-99-0120075
24-50-05 15	5920-99-0120075
49-60-10 05	5920-99-0120075
F4-GG	
24-50-05 08	SPARE
24-50-05 11	SPARE
24-50-05 14	SPARE
24-50-05 15	SPARE
F4-XZ	
24-50-05 08	SPARE
24-21-17 03	5920-99-0120075
24-21-17 04	5920-99-0120075
24-50-05 11	5920-99-0120075
24-50-05 14	5920-99-0120075
24-50-05 15	5920-99-0120075
F4-ZJ	

IDENT CH-SECT-UNIT-FIG	PART NUMBER
F4-ZJ	
31-50-05 03	5920-99-0120075
F4-ZK	
24-50-05 08	SPARE
24-50-05 11	SPARE
24-50-05 14	SPARE
24-50-05 15	SPARE
F4-ZKA	
24-50-05 08	SPARE
49-60-30 06	5920-99-0120077
49-60-30 08	5920-99-0120077
49-60-30 09	5920-99-0120077
49-60-30 11	5920-99-0120077
24-50-05 11	5920-99-0120078
24-50-05 14	5920-99-0120078
24-50-05 15	5920-99-0120078
F4-ZL	
24-50-01 05	5920-99-0120075
24-50-01 06	5920-99-0120075
24-50-01 07	5920-99-0120075
24-50-05 08	5920-99-0120075
24-50-05 11	5920-99-0120075
24-50-05 14	5920-99-0120075
24-50-05 15	5920-99-0120075
F40-ZK	
24-50-05 08	5920-99-0120075
24-50-05 11	5920-99-0120075
24-50-05 14	5920-99-0120075
24-50-05 15	5920-99-0120075
24-21-17 03	5920-99-0120079
24-21-17 04	5920-99-0120079
F41-ZK	
24-50-05 08	5920-99-0120075
24-50-05 11	5920-99-0120075
24-50-05 14	5920-99-0120075
24-50-05 15	5920-99-0120075
F42-ZK	
24-50-05 08	5920-99-0120075
24-50-05 11	5920-99-0120075
24-50-05 14	5920-99-0120075
24-50-05 15	5920-99-0120075
28-40-30 05	5920-99-0120075
F43-ZK	
24-50-05 08	SPARE
24-50-05 11	SPARE
24-50-05 14	SPARE
24-50-05 15	SPARE
F44-ZK	
24-50-05 08	SPARE
24-50-05 11	SPARE
24-50-05 14	SPARE

IDENT CH-SECT-UNIT-FIG	PART NUMBER
F44-ZK	
24-50-05 15	SPARE
F45-ZK	
24-50-05 08	SPARE
24-50-05 11	SPARE
24-50-05 14	SPARE
24-50-05 15	SPARE
F46-ZK	
24-50-05 08	5920-99-0120075
24-50-05 11	5920-99-0120075
24-50-05 14	5920-99-0120075
24-50-05 15	5920-99-0120075
77-10-10 02	5920-99-0120075
F47-ZK	
24-50-05 08	5920-99-0120075
24-50-05 11	5920-99-0120075
24-50-05 14	5920-99-0120075
24-50-05 15	5920-99-0120075
77-10-10 02	5920-99-0120075
F48-ZK	
24-50-05 08	5920-99-0120075
24-50-05 11	5920-99-0120075
24-50-05 14	5920-99-0120075
24-50-05 15	5920-99-0120075
77-10-10 02	5920-99-0120075
F49-ZK	
24-50-05 11	SPARE
24-50-05 14	SPARE
24-50-05 15	SPARE
F5-AA	
33-10-20 04	5920-99-0120076
F5-AB	
33-10-20 04	5920-99-0120076
F5-DAC	
24-50-05 08	5920-99-0120075
24-50-05 11	5920-99-0120075
24-50-05 14	5920-99-0120075
24-50-05 15	5920-99-0120075
27-33-00 05	5920-99-0120075
27-33-00 07	5920-99-0120075
F5-GG	
24-50-05 08	SPARE
24-50-05 11	SPARE
24-50-05 14	SPARE
24-50-05 15	SPARE
F5-ZK	
24-50-05 08	SPARE
24-50-05 11	SPARE
24-50-05 14	SPARE
24-50-05 15	SPARE
F5-ZKA	

IDENT CH-SECT-UNIT-FIG	PART NUMBER
F5-ZKA	
24-50-05 08	SPARE
24-50-05 11	5920-99-0120076
24-50-05 14	5920-99-0120076
24-50-05 15	5920-99-0120076
49-60-30 06	5920-99-0120077
49-60-30 08	5920-99-0120077
49-60-30 09	5920-99-0120077
F5-ZL	
24-50-05 08	5920-99-0120076
24-50-05 11	5920-99-0120076
24-50-05 14	5920-99-0120076
24-50-05 15	5920-99-0120076
80-10-10 04	5920-99-0120076
F50-ZK	
24-50-05 08	5920-99-0120075
24-50-05 11	5920-99-0120075
24-50-05 14	5920-99-0120075
24-50-05 15	5920-99-0120075
77-20-10 02	5920-99-0120075
F51-ZK	
24-50-05 08	5920-99-0120075
24-50-05 11	5920-99-0120075
24-50-05 14	5920-99-0120075
24-50-05 15	5920-99-0120075
28-40-20 02	5920-99-0120075
F52-ZK	
24-50-05 08	5920-99-0120075
24-50-05 11	5920-99-0120075
24-50-05 14	5920-99-0120075
24-50-05 15	5920-99-0120075
73-20-01 05	5920-99-0120075
F53-ZK	
24-50-05 08	5920-99-0120075
24-50-05 11	5920-99-0120075
24-50-05 14	5920-99-0120075
24-50-05 15	5920-99-0120075
28-40-40 02	5920-99-0120075
F54-ZK	
24-50-05 08	5920-99-0120075
24-50-05 11	5920-99-0120075
24-50-05 14	5920-99-0120075
24-50-05 15	5920-99-0120075
79-30-10 02	5920-99-0120075
F55-ZK	
24-50-01 05	5920-99-0120075
24-50-01 06	5920-99-0120075
24-50-01 07	5920-99-0120075
24-50-05 08	5920-99-0120075
24-50-05 11	5920-99-0120075
24-50-05 14	5920-99-0120075

IDENT CH-SECT-UNIT-FIG	PART NUMBER
F55-ZK	
24-50-05 15	5920-99-0120075
F56-ZK	
24-50-05 08	5920-99-0120075
24-50-05 11	5920-99-0120075
24-50-05 14	5920-99-0120075
24-50-05 15	5920-99-0120075
30-20-10 02	5920-99-0120075
F57-ZK	
24-50-05 08	5920-99-0120075
24-50-05 11	5920-99-0120075
24-50-05 14	5920-99-0120075
24-50-05 15	5920-99-0120075
26-10-30 03	5920-99-0120075
F58-ZK	
24-50-05 08	5920-99-0120075
24-50-05 11	5920-99-0120075
24-50-05 14	5920-99-0120075
24-50-05 15	5920-99-0120075
26-10-30 03	5920-99-0120075
F59-ZK	
24-50-01 05	5920-99-0120075
24-50-01 06	5920-99-0120075
24-50-01 07	5920-99-0120075
24-50-05 08	5920-99-0120075
24-50-05 11	5920-99-0120075
24-50-05 14	5920-99-0120075
24-50-05 15	5920-99-0120075
F6-AA	
33-10-20 04	5920-99-0120076
33-10-20 07	5920-99-0120076
33-10-20 08	5920-99-0120076
F6-AB	
33-10-05 05	5920-99-0120076
33-10-05 07	5920-99-0120076
33-10-05 08	5920-99-0120076
33-10-05 09	5920-99-0120076
33-10-05 11	5920-99-0120076
F6-DAC	
24-50-05 08	5920-99-0120075
24-50-05 11	5920-99-0120075
24-50-05 14	5920-99-0120075
24-50-05 15	5920-99-0120075
27-33-00 05	5920-99-0120075
27-33-00 07	5920-99-0120075
F6-GG	
24-50-05 08	SPARE
24-50-05 11	SPARE
24-50-05 14	SPARE
24-50-05 15	SPARE
F6-ZK	

IDENT CH-SECT-UNIT-FIG	PART NUMBER
F6-ZK	
24-50-05 08	5920-99-0120075
24-50-05 11	5920-99-0120075
24-50-05 14	5920-99-0120075
24-50-05 15	5920-99-0120075
77-10-10 02	5920-99-0120075
F6-ZKA	
24-50-05 08	SPARE
24-50-05 11	SPARE
24-50-05 14	SPARE
24-50-05 15	SPARE
49-60-30 06	5920-99-0120076
49-60-30 08	5920-99-0120076
49-60-30 09	5920-99-0120076
49-60-30 11	5920-99-0120076
F6-ZL	
24-50-05 08	5920-99-0120076
24-50-05 11	5920-99-0120076
24-50-05 14	5920-99-0120076
24-50-05 15	5920-99-0120076
80-10-10 04	5920-99-0120076
F60-ZK	
24-30-10 02	5920-99-0120075
24-50-05 08	5920-99-0120075
24-50-05 11	5920-99-0120075
24-50-05 14	5920-99-0120075
24-50-05 15	5920-99-0120075
F61-ZK	
24-50-05 08	5920-99-0120075
24-50-05 11	5920-99-0120075
24-50-05 14	5920-99-0120075
24-50-05 15	5920-99-0120075
28-40-20 02	5920-99-0120075
F62-ZK	
24-50-05 08	5920-99-0120075
24-50-05 11	5920-99-0120075
24-50-05 14	5920-99-0120075
24-50-05 15	5920-99-0120075
73-20-02 05	5920-99-0120075
F63-ZK	
24-50-05 08	5920-99-0120075
24-50-05 11	5920-99-0120075
24-50-05 14	5920-99-0120075
24-50-05 15	5920-99-0120075
28-40-40 02	5920-99-0120075
F64-ZK	
24-50-05 08	5920-99-0120075
24-50-05 11	5920-99-0120075
24-50-05 14	5920-99-0120075
24-50-05 15	5920-99-0120075
79-30-10 02	5920-99-0120075

IDENT CH-SECT-UNIT-FIG	PART NUMBER
F65-ZK	
24-50-05 08	5920-99-0120075
24-50-05 11	5920-99-0120075
24-50-05 14	5920-99-0120075
24-50-05 15	5920-99-0120075
33-31-10 04	5920-99-0120075
F66-ZK	
24-50-05 08	5920-99-0120075
24-50-05 11	5920-99-0120075
24-50-05 14	5920-99-0120075
24-50-05 15	5920-99-0120075
30-20-10 02	5920-99-0120075
F67-ZK	
24-50-05 08	SPARE
24-50-05 11	5920-99-0120075
24-50-05 14	5920-99-0120075
24-50-05 15	5920-99-0120075
F68-ZK	
24-50-05 08	5920-99-0120074
24-50-05 11	5920-99-0120074
24-50-05 14	5920-99-0120074
24-50-05 15	5920-99-0120074
30-40-15 07	5920-99-0120074
30-40-15 10	5920-99-0120074
30-40-15 11	5920-99-0120074
30-40-15 12	5920-99-0120074
F69-ZK	
24-50-05 08	5920-99-0120074
24-50-05 11	5920-99-0120074
24-50-05 14	5920-99-0120074
24-50-05 15	5920-99-0120074
30-40-15 07	5920-99-0120074
30-40-15 10	5920-99-0120074
30-40-15 11	5920-99-0120074
30-40-15 12	5920-99-0120074
F7-AA	
33-10-20 04	5920-99-0120076
33-10-20 07	5920-99-0120076
33-10-20 08	5920-99-0120076
F7-DAC	
24-50-05 08	5920-99-0120075
24-50-05 11	5920-99-0120075
24-50-05 14	5920-99-0120075
24-50-05 15	5920-99-0120075
30-30-31 02	5920-99-0120075
F7-GG	
24-50-05 08	SPARE
24-50-05 11	SPARE
24-50-05 14	SPARE
24-50-05 15	SPARE
F7-ZK	

IDENT CH-SECT-UNIT-FIG	PART NUMBER
F7-ZK	
24-50-05 08	5920-99-0120075
24-50-05 11	5920-99-0120075
24-50-05 14	5920-99-0120075
24-50-05 15	5920-99-0120075
77-10-10 02	5920-99-0120075
F7-ZKA	
49-60-30 06	L1330A325
49-60-30 08	L1330A325
49-60-30 09	L1330A325
49-60-30 11	L1330A325
24-50-05 08	SPARE
24-50-05 11	SPARE
24-50-05 14	SPARE
24-50-05 15	SPARE
F7-ZL	
24-50-01 05	5920-99-0120079
24-50-01 06	5920-99-0120079
24-50-01 07	5920-99-0120079
24-50-05 08	5920-99-0120079
24-50-05 11	5920-99-0120079
24-50-05 14	5920-99-0120079
24-50-05 15	5920-99-0120079
F70-ZK	
24-30-20 02	5920-99-0120075
24-30-20 03	5920-99-0120075
24-50-05 08	5920-99-0120075
24-50-05 11	5920-99-0120075
24-50-05 14	5920-99-0120075
24-50-05 15	5920-99-0120075
F71-ZK	
31-50-05 03	5920-99-0120080
F8-DAC	
24-50-05 08	5920-99-0120075
24-50-05 11	5920-99-0120075
24-50-05 14	5920-99-0120075
24-50-05 15	5920-99-0120075
33-10-05 05	5920-99-0120075
33-10-05 07	5920-99-0120075
33-10-05 08	5920-99-0120075
33-10-05 09	5920-99-0120075
33-10-05 11	5920-99-0120075
F8-GG	
24-50-05 08	5920-99-0120074
24-50-05 11	5920-99-0120074
24-50-05 14	5920-99-0120074
24-50-05 15	5920-99-0120074
30-40-15 07	5920-99-0120074
30-40-15 10	5920-99-0120074
30-40-15 11	5920-99-0120074
30-40-15 12	5920-99-0120074

IDENT CH-SECT-UNIT-FIG	PART NUMBER
F8-ZK	
24-50-05 08	5920-99-0120075
24-50-05 11	5920-99-0120075
24-50-05 14	5920-99-0120075
24-50-05 15	5920-99-0120075
77-10-10 02	5920-99-0120075
F8-ZKA	
24-50-05 08	SPARE
24-50-05 11	5920-99-0120075
24-50-05 14	5920-99-0120075
24-50-05 15	5920-99-0120075
49-60-10 05	5920-99-0120075
F8-ZL	
24-50-01 05	5920-99-0120075
24-50-01 06	5920-99-0120075
24-50-01 07	5920-99-0120075
24-50-05 08	5920-99-0120075
24-50-05 11	5920-99-0120075
24-50-05 14	5920-99-0120075
24-50-05 15	5920-99-0120075
F9-DAC	
24-50-05 08	5920-99-0120076
24-50-05 11	5920-99-0120076
24-50-05 14	5920-99-0120076
24-50-05 15	5920-99-0120076
33-10-20 04	5920-99-0120076
33-10-20 07	5920-99-0120076
33-10-20 08	5920-99-0120076
F9-GG	
24-50-05 08	5920-99-0120074
24-50-05 11	5920-99-0120074
24-50-05 14	5920-99-0120074
24-50-05 15	5920-99-0120074
30-40-15 07	5920-99-0120074
30-40-15 10	5920-99-0120074
30-40-15 11	5920-99-0120074
30-40-15 12	5920-99-0120074
F9-ZJ	
31-50-05 03	5920-99-0120075
F9-ZK	
24-50-05 08	SPARE
24-50-05 11	SPARE
24-50-05 14	SPARE
24-50-05 15	SPARE
F9-ZKA	
24-50-05 08	SPARE
24-50-05 11	5920-99-0120075
24-50-05 14	5920-99-0120075
24-50-05 15	5920-99-0120075
49-60-10 05	5920-99-0120075
F9-ZL	

IDENT CH-SECT-UNIT-FIG	PART NUMBER
F9-ZL	
24-30-20 02	5920-99-0120075
24-30-20 03	5920-99-0120075
24-50-01 05	5920-99-0120075
24-50-01 06	5920-99-0120075
24-50-01 07	5920-99-0120075
24-50-05 08	5920-99-0120075
24-50-05 11	5920-99-0120075
24-50-05 14	5920-99-0120075
24-50-05 15	5920-99-0120075
49-60-10 05	5920-99-0120075
G	
33-10-20 04	140-4538
33-10-20 07	140-4538
33-10-20 08	140-4538
G-AA	
33-10-20 04	E1250-003
G-AB	
33-10-05 05	E1250-003
33-10-05 07	E1250-003
G-CC	
29-32-10 05	696-01-0013
31-20-60 02	696-010013
G-CC-R	
29-32-10 05	GTR62-12NACS1
29-32-10 05	602GB129-12-1
29-32-10 05	6026-12-10SN
29-32-10 05	6026-12-10SNCO* NDB
29-32-10 05	6026-12-10SNCO* ND1
29-32-10 05	6026-12-10SN08
G-DAB	
30-40-15 07	MR5-680RPM1PCT
30-40-15 10	MR5-680RPM1PCT
30-40-15 11	MR5-680RPM1PCT
30-40-15 12	MR5-680RPM1PCT
30-40-15 07	TR5-680R
30-40-15 10	TR5-680R
30-40-15 11	TR5-680R
30-40-15 12	TR5-680R
30-40-15 07	2TL1-7
30-40-15 10	2TL1-7
30-40-15 11	2TL1-7
30-40-15 12	2TL1-7
G-DAG	
30-40-15 07	652-1
30-40-15 12	652-2W
G-DAG	
30-40-15 10	652-2W
30-40-15 11	652-2W

IDENT CH-SECT-UNIT-FIG	PART NUMBER
G-DAG	
30-40-15 07	652-2W
G-DR	
27-33-00 05	WC1503
27-33-00 07	WC1503
G-GA	
24-30-10 02	A703FSS
49-60-30 09	A703FSS
80-10-10 04	A703FSS
G-GG	
21-60-10 08	HWBUN1146D10B
21-60-10 10	HWBUN1146D10B
21-60-10 11	HWBUN1146D10B
27-00-10 03	HWBUN1146D10B
27-00-10 04	HWBUN1146D10B
28-40-30 05	HWBUN1146D10B
28-40-40 02	HWBUN1146D10B
32-60-10 04	HWBUN1146D10B
73-20-02 05	HWBUN1146D10B
G-R	
31-20-60 02	GTR62-12NACS1
31-20-60 02	602GB129-12-1
31-20-60 02	6026-12-10SN
G-S10-DAL	
31-50-01 04	25-6NF1909A
31-50-01 07	25-6NF1909A
31-50-01 08	25-6NF1909A
31-50-01 09	25-6NF1909A
31-50-01 14	25-6NF1909A
G-WX	
31-50-05 03	BYW54
31-50-05 03	571-4101-01-05* -19
G-XZ	
24-21-17 03	HWBUN1146D10B
24-21-17 04	HWBUN1146D10B
24-90-01 05	HWBUN1146D10B
24-90-01 06	HWBUN1146D10B
30-30-20 02	HWBUN1146D10B
G-ZKA	
49-60-10 05	M12883-41-16
49-60-10 05	M300-1264
49-60-10 05	S0-1049-8309
G-ZL	
24-50-01 05	1628
24-50-01 06	1628
24-50-01 07	1628
G-ZT	
21-60-10 11	M12883-41-16
21-60-10 11	M300-1264
GA-CC	

IDENT CH-SECT-UNIT-FIG	PART NUMBER
GA-CC	
32-60-10 04	BYW54
GA-DAB	
27-33-00 05	M12883-40-19
27-33-00 07	M12883-40-19
27-33-00 05	M400-1265
27-33-00 07	M400-1265
GA-DB	
28-41-30 02	M12883-41-16
28-41-30 02	M300-1264
28-41-30 02	S01049-8309
GB-CC	
32-60-10 04	BYW54
GB-CG	
31-50-01 04	C9032-001B
31-50-01 07	C9032-001B
31-50-01 08	C9032-001B
31-50-01 09	C9032-001B
31-50-01 14	C9032-001B
GB-DB	
28-41-20 03	HDS8SF3J06
28-41-20 03	RSE120074
GB-DB	
28-41-20 03	HDS8SF3J03
28-41-20 03	RSE120074
GC-CC	
32-60-10 04	BYW54
GC-CG	
31-50-01 04	C9032-001B
31-50-01 07	C9032-001B
31-50-01 08	C9032-001B
31-50-01 09	C9032-001B
31-50-01 14	C9032-001B
GC-DAB	
27-33-00 05	M12883-40-19
27-33-00 07	M12883-40-19
27-33-00 05	M400-1265
27-33-00 07	M400-1265
GC-DB	
28-41-20 03	HDS8SF3J06
28-41-20 03	RSE120074
GC-DB	
28-41-20 03	HDS8SF3J03
28-41-20 03	RSE120074
GD	
49-60-30 06	23080-006
49-60-30 08	23080-006
49-60-30 09	23080-006
49-60-30 11	23080-006
GD	
73-20-02 05	2118002-6

IDENT CH-SECT-UNIT-FIG	PART NUMBER
GD-CC	
32-60-10 04	BYW54
GD-CG	
31-50-01 04	C9032-001B
31-50-01 07	C9032-001B
31-50-01 08	C9032-001B
31-50-01 09	C9032-001B
31-50-01 14	C9032-001B
GD-DB	
28-41-20 03	HDS8SF3J06
28-41-20 03	RSE120074
GD-DB	
28-41-20 03	HDS8SF3J03
28-41-20 03	RSE120074
GE-CC	
32-60-10 04	BYW54
GE-DAB	
27-33-00 05	M12883-40-19
27-33-00 07	M12883-40-19
27-33-00 05	M400-1265
27-33-00 07	M400-1265
GE-DB	
28-41-10 02	M300-1264
28-41-10 03	M300-1264
28-41-10 02	S0-1049-8309
28-41-10 03	S0-1049-8309
GF	
33-31-10 04	30180B25
GF-CC	
32-60-10 04	BYW54
GF-CG	
31-50-01 04	C9032-001B
31-50-01 07	C9032-001B
31-50-01 08	C9032-001B
31-50-01 09	C9032-001B
31-50-01 14	C9032-001B
GF-DB	
28-41-30 02	(OPT
28-41-30 02	M12883-40-19
28-41-20 03	M12883-40-23
28-41-10 02	M400-1265
28-41-10 03	M400-1265
28-41-20 03	M400-1265
28-41-30 02	M400-1265
28-41-10 02	S0-1048-8308
28-41-10 03	S0-1048-8308
28-41-30 02	S01048-8308
GG-CC	
32-60-10 04	BYW54
GG-CG	
31-50-01 04	C9032-001B

IDENT CH-SECT-UNIT-FIG	PART NUMBER
GG-CG	
31-50-01 07	C9032-001B
31-50-01 08	C9032-001B
31-50-01 09	C9032-001B
31-50-01 14	C9032-001B
GG-DAB	
27-33-00 05	M12883-40-19
27-33-00 07	M12883-40-19
27-33-00 05	M400-1265
27-33-00 07	M400-1265
GG-DB	
28-41-20 03	M12883-40-23
28-41-20 03	M400-1265
GG5-P	
28-21-05 03	MTC100KT1-1101
28-21-05 03	MTC100KT1-1102
28-21-05 03	MTC100YH1-003
GH	
26-20-10 03	33200002
26-20-10 03	33200002-3
GH-A-R	
26-20-10 03	PC06E8-2SSR
GH-B-R	
26-20-10 03	PC06E8-2SSR
GH-CC	
73-20-02 05	BYW54
GH-CG	
31-50-01 04	C9032-001B
31-50-01 07	C9032-001B
31-50-01 08	C9032-001B
31-50-01 09	C9032-001B
31-50-01 14	C9032-001B
GJ	
26-20-10 03	33200002
26-20-10 03	33200002-3
GJ-A-R	
26-20-10 03	PC06E8-2SSR
GJ-B-R	
26-20-10 03	PC06E8-2SSR
GJ-CC	
32-60-10 04	BYW54
GJ-DAB	
27-33-00 05	M12883-40-19
27-33-00 07	M12883-40-19
27-33-00 05	M400-1265
27-33-00 07	M400-1265
GK-CG	
31-50-01 04	C9032-001B
31-50-01 07	C9032-001B
31-50-01 08	C9032-001B
31-50-01 09	C9032-001B

IDENT CH-SECT-UNIT-FIG	PART NUMBER
GK-CG	
31-50-01 14	C9032-001B
GK-DB	
28-41-20 03	M12883-41-19
28-41-20 03	M300-1264
GL	
33-40-10 05	MS3102R10SL3P
33-40-10 05	MS3102R10SL3S
33-40-10 06	30-0516-1
33-40-10 05	30-0531-1
GL-CG	
31-50-01 04	C9032-001B
31-50-01 07	C9032-001B
31-50-01 08	C9032-001B
31-50-01 09	C9032-001B
31-50-01 14	C9032-001B
GL-DAB	
27-33-00 05	M12883-40-24
27-33-00 07	M12883-40-24
27-33-00 05	M402D4A
27-33-00 07	M402D4A
GM-CC	
27-61-10 08	BYW54
GM-CG	
31-50-01 04	C9032-001B
31-50-01 07	C9032-001B
31-50-01 08	C9032-001B
31-50-01 09	C9032-001B
31-50-01 14	C9032-001B
GM-DB	
28-41-30 02	M12883-41-16
28-41-30 02	M300-1264
28-41-30 02	S01049-8309
GM-P	
33-40-10 05	MS3456L10SL3SN
33-40-10 06	MS3456L10SL3SN
GM-R	
33-40-10 05	6026-14-5PCONDB
33-40-10 06	6026-14-5PCONDB
GP-A	
27-33-00 05	104829001
27-33-00 07	104829001
27-33-00 05	151606001
27-33-00 07	151606001
GP-B	
27-33-00 05	104829001
27-33-00 07	104829001
27-33-00 05	151606001
27-33-00 07	151606001
GR-CC	
27-61-10 08	BYW54

IDENT CH-SECT-UNIT-FIG	PART NUMBER
GR-CG	
31-50-01 04	C9032-001B
31-50-01 07	C9032-001B
31-50-01 08	C9032-001B
31-50-01 09	C9032-001B
31-50-01 14	C9032-001B
GS-CG	
31-50-01 04	C9032-001B
31-50-01 07	C9032-001B
31-50-01 08	C9032-001B
31-50-01 09	C9032-001B
31-50-01 14	C9032-001B
GT-CG	
31-50-01 04	C9032-001B
31-50-01 07	C9032-001B
31-50-01 08	C9032-001B
31-50-01 09	C9032-001B
31-50-01 14	C9032-001B
GU-CG	
31-50-01 04	C9032-001B
31-50-01 07	C9032-001B
31-50-01 08	C9032-001B
31-50-01 09	C9032-001B
31-50-01 14	C9032-001B
GW	
33-31-10 04	P650
GX	
31-20-60 02	TP42001
GY	
21-60-10 08	MS3108R14-5S
21-60-10 10	MS3108R14-5S
21-60-10 11	MS3108R14-5S
21-60-10 08	321292-1
21-60-10 10	321292-1
21-60-10 11	321292-1
GZ	
21-60-10 08	MS3108R14-5S
21-60-10 10	MS3108R14-5S
21-60-10 11	MS3108R14-5S
21-60-10 08	321292-1
21-60-10 10	321292-1
21-60-10 11	321292-1
G1-AB	
49-60-30 06	MS3456L10SL4S
49-60-30 08	MS3456L10SL4S
49-60-30 09	MS3456L10SL4S
49-60-30 11	MS3456L10SL4S
G2-CAB	
49-60-30 06	MS3450L10SL3S
49-60-30 08	MS3450L10SL3S
49-60-30 09	MS3450L10SL3S

IDENT CH-SECT-UNIT-FIG	PART NUMBER
G2-CAB	
49-60-30 11	MS3450L10SL3S
G263	
22-10-40 53	622-6208-004
G3-AB	
49-60-30 06	MS3108810SL4S
49-60-30 08	MS3108810SL4S
49-60-30 09	MS3108810SL4S
49-60-30 11	MS3108810SL4S
G527	
34-30-20 53	G6868-04
H	
33-10-10 31	HWBUN1736D10B
33-10-20 04	140-4538
33-10-20 07	140-4538
33-10-20 08	140-4538
H-AA	
33-10-20 04	HSA50-1R8
H-AB	
33-10-20 04	HSA50-1R8
H-CC	
31-20-60 02	99-230
H-DAG	
30-40-15 07	652-1
30-40-15 12	652-2W
H-DAG	
30-40-15 10	652-2W
30-40-15 11	652-2W
H-DAG	
30-40-15 07	652-2W
H-DE	
49-60-10 05	C9032-009A
H-DE	
49-60-10 05	C9032-009B
H-DR	
27-33-00 05	BHGD21TL28WBS5* 95
27-33-00 07	BHGD21TL28WBS5* 95
27-33-00 05	6308-0010A
27-33-00 07	6308-0010A
H-GA	
24-30-10 02	A703ZS
24-50-01 05	A703ZS
24-50-01 06	A703ZS
24-50-01 07	A703ZS
49-60-10 05	703ZS
H-GG	
31-20-35 02	HWBUN1146D10B
31-20-35 03	HWBUN1146D10B
32-60-10 04	HWBUN1146D10B

IDENT CH-SECT-UNIT-FIG	PART NUMBER
H-GG	
73-20-01 05	HWBUN1146D10B
73-20-10 03	HWBUN1146D10B
77-10-10 02	HWBUN1146D10B
H-S11-DAL	
31-50-01 04	25-8NF761-41A
31-50-01 07	25-8NF761-41A
31-50-01 08	25-8NF761-41A
31-50-01 09	25-8NF761-41A
31-50-01 14	25-8NF761-41A
H-UC	
31-50-05 03	GE308
31-50-05 03	12-271
31-50-05 03	25-8FR445-1A
H-WX	
31-50-05 03	BYW54
H-XZ	
24-21-17 03	25-7NF1815-5A
24-21-17 04	25-7NF1815-5A
24-21-17 03	9274-4024
30-30-20 02	9274-4024
24-21-17 04	9274-6205
H-XZ	
24-21-17 03	25-7NF1815-5A
24-21-17 03	9274-6205
H-ZKA	
49-60-10 05	M12883-41-16
49-60-10 05	M300-1264
49-60-10 05	S0-1049-8309
H-ZL	
24-50-01 05	1628
24-50-01 06	1628
24-50-01 07	1628
49-60-30 06	1628
49-60-30 08	1628
49-60-30 09	1628
H-ZT	
21-60-10 11	M12883-41-16
21-60-10 11	M300-1264
HA	
33-40-10 05	G9950-1
33-40-10 06	01-0790044-55
HA-DAB	
27-33-00 05	M12883-40-24
27-33-00 07	M12883-40-24
27-33-00 05	M402D4A
27-33-00 07	M402D4A
HA-DAH	
21-60-10 08	WBUN1193SS5B
21-60-10 10	WBUN1193SS5B
21-60-10 11	WBUN1193SS5B

IDENT CH-SECT-UNIT-FIG	PART NUMBER
HA-DAH	
21-60-10 08	25-7NF885A
21-60-10 10	25-7NF885A
21-60-10 11	25-8NF4443A
HA-DB	
28-41-20 03	BYW54
HA-R	
33-40-10 05	AN3108E10SL3S
33-40-10 06	AN3108E10SL3S
HA-X	
21-60-10 11	WBUN1193SS5B
21-60-10 11	25-8NF4443A
HB-CG	
31-50-01 04	C9032-001B
31-50-01 07	C9032-001B
31-50-01 08	C9032-001B
31-50-01 09	C9032-001B
31-50-01 14	C9032-001B
HC	
27-00-10 03	HWBUN1146S5B
27-00-10 04	HWBUN1146S5B
33-30-15 07	HWBUN1736D10B
33-40-10 05	HWBUN1736S10B
33-40-10 06	HWBUN1736S10B
HC-CG	
31-50-01 04	C9032-001B
31-50-01 07	C9032-001B
31-50-01 08	C9032-001B
31-50-01 09	C9032-001B
31-50-01 14	C9032-001B
HC-DAB	
27-33-00 05	M12883-41-16
27-33-00 07	M12883-41-16
27-33-00 05	M300-1264
27-33-00 07	M300-1264
HC-DB	
28-41-20 03	BYW54
HD	
33-40-10 05	80-10-0200
33-40-10 06	80-10-0200
HD-CG	
31-50-01 04	C9032-001B
31-50-01 07	C9032-001B
31-50-01 08	C9032-001B
31-50-01 09	C9032-001B
31-50-01 14	C9032-001B
HD-DAB	
27-33-00 05	M12883-41-16
27-33-00 07	M12883-41-16
27-33-00 05	M300-1264
27-33-00 07	M300-1264

IDENT CH-SECT-UNIT-FIG	PART NUMBER
HD-DB	
28-41-20 03	BYW54
HE	
33-40-10 05	HWBUN1146S5B
33-40-10 06	HWBUN1146S5B
HE-DAB	
27-33-00 05	M12883-41-16
27-33-00 07	M12883-41-16
27-33-00 05	M300-1264
27-33-00 07	M300-1264
HE-DB	
28-41-20 03	BYW54
HF-CG	
31-50-01 04	C9032-001B
31-50-01 07	C9032-001B
31-50-01 08	C9032-001B
31-50-01 09	C9032-001B
31-50-01 14	C9032-001B
HG-CG	
31-50-01 04	C9032-001B
31-50-01 07	C9032-001B
31-50-01 08	C9032-001B
31-50-01 09	C9032-001B
31-50-01 14	C9032-001B
HG-DAB	
21-30-10 04	M12883-41-16
21-60-10 10	M12883-41-16
21-60-10 11	M12883-41-16
21-30-10 04	M300-1264
21-60-10 10	M300-1264
21-60-10 11	M300-1264
HH-CG	
31-50-01 04	C9032-001B
31-50-01 07	C9032-001B
31-50-01 08	C9032-001B
31-50-01 09	C9032-001B
31-50-01 14	C9032-001B
HH-DAB	
21-60-10 10	M12883-41-16
21-60-10 11	M12883-41-16
21-60-10 10	M300-1264
21-60-10 11	M300-1264
HH-DB	
28-41-20 03	BYW54
HJ-DAB	
21-60-10 10	M12883-41-16
21-60-10 11	M12883-41-16
21-60-10 10	M300-1264
21-60-10 11	M300-1264
HJ-DB	
28-41-20 03	BYW54

IDENT CH-SECT-UNIT-FIG	PART NUMBER
HK-CG	
31-50-01 04	C9032-001B
31-50-01 07	C9032-001B
31-50-01 08	C9032-001B
31-50-01 09	C9032-001B
31-50-01 14	C9032-001B
HL-CG	
31-50-01 04	C9032-001B
31-50-01 07	C9032-001B
31-50-01 08	C9032-001B
31-50-01 09	C9032-001B
31-50-01 14	C9032-001B
HM	
27-00-10 03	21EN108-6
27-00-10 04	21EN108-6
HM	
R 27-00-10 04	9002EN16
HM-CG	
31-50-01 04	C9032-001B
31-50-01 07	C9032-001B
31-50-01 08	C9032-001B
31-50-01 09	C9032-001B
31-50-01 14	C9032-001B
HN	
27-00-10 03	21EN108-6
27-00-10 04	21EN108-6
HN	
R 27-00-10 04	9002EN16
HN-DA	
24-50-05 08	HWBUN1146S3B
24-50-05 11	HWBUN1146S3B
24-50-05 14	HWBUN1146S3B
24-50-05 15	HWBUN1146S3B
HP	
33-40-10 05	HWBUN1736D5B
33-40-10 06	HWBUN1736D5B
78-30-05 01	HWBUN1736D5B
78-30-05 02	HWBUN1736D5B
HP-CG	
31-50-01 04	C9032-001B
31-50-01 07	C9032-001B
31-50-01 08	C9032-001B
31-50-01 09	C9032-001B
31-50-01 14	C9032-001B
HP-DA	
24-50-05 08	HWBUN1146S3B
24-50-05 11	HWBUN1146S3B
24-50-05 14	HWBUN1146S3B
24-50-05 15	HWBUN1146S3B
HQ	
33-40-10 05	422250-16

IDENT CH-SECT-UNIT-FIG	PART NUMBER
HQ	
33-40-10 06	422250-16
HR-CG	
31-50-01 04	C9032-001B
31-50-01 07	C9032-001B
31-50-01 08	C9032-001B
31-50-01 09	C9032-001B
31-50-01 14	C9032-001B
HS	
33-30-15 07	25-7TP25-1
HS-CG	
31-50-01 04	C9032-001B
31-50-01 07	C9032-001B
31-50-01 08	C9032-001B
31-50-01 09	C9032-001B
31-50-01 14	C9032-001B
HT	
33-30-15 07	25-7TP25-2
HT-CG	
31-50-01 04	C9032-001B
31-50-01 07	C9032-001B
31-50-01 08	C9032-001B
31-50-01 09	C9032-001B
31-50-01 14	C9032-001B
HU-CG	
31-50-01 04	C9032-001B
31-50-01 07	C9032-001B
31-50-01 08	C9032-001B
31-50-01 09	C9032-001B
31-50-01 14	C9032-001B
HV-CG	
31-50-01 04	C9032-001B
31-50-01 07	C9032-001B
31-50-01 08	C9032-001B
31-50-01 09	C9032-001B
31-50-01 14	C9032-001B
HW	
27-00-10 03	HWBUN1146S3B
27-00-10 04	HWBUN1146S3B
HX	
27-00-10 03	HWBUN1146S3B
27-00-10 04	HWBUN1146S3B
HX-CG	
31-50-01 04	C9032-001B
31-50-01 07	C9032-001B
31-50-01 08	C9032-001B
31-50-01 09	C9032-001B
31-50-01 14	C9032-001B
IGN	
49-60-30 06	MS3456L10SL3S
IGN-BA	

IDENT CH-SECT-UNIT-FIG	PART NUMBER
IGN-BA	
49-60-30 06	MS3455L10SL3S
49-60-30 08	MS3455L10SL3S
49-60-30 11	MS3455L10SL3S
J-AA	
33-10-20 04	25-8NF441-31A
33-10-20 04	5905-99-0135979
J-AB	
33-10-05 05	5905-99-0135979
33-10-05 07	5905-99-0135979
J-CC	
28-40-10 04	WL1901KID1
28-40-10 05	WL1903KID01
J-DAG	
30-40-20 03	ND0075-2001
30-40-20 05	ND0075-2001
J-DR	
27-33-00 05	WC1503
27-33-00 07	WC1503
J-GA	
49-60-10 05	A703ZS
J-GG	
21-60-10 08	HWBUN1146D10B
21-60-10 10	HWBUN1146D10B
21-60-10 11	HWBUN1146D10B
24-50-01 05	HWBUN1146D10B
24-50-01 06	HWBUN1146D10B
24-50-01 07	HWBUN1146D10B
27-00-10 03	HWBUN1146D10B
27-00-10 04	HWBUN1146D10B
30-20-10 02	HWBUN1146D10B
49-60-30 06	HWBUN1146D10B
49-60-30 08	HWBUN1146D10B
49-60-30 11	HWBUN1146D10B
77-20-10 02	HWBUN1146D10B
J-GG	
49-60-30 09	72544-030-0AV2
J-P	
33-20-10 10	BAEREF000003649
33-20-10 10	6027-10-6PNCON* DC
J-R	
33-20-10 10	BAEREF000003533
33-20-10 10	6026-10-6SNCON* DD
J-S2-DAL	
31-50-01 04	25-6NF693-41A
31-50-01 07	25-6NF693-41A
31-50-01 08	25-6NF693-41A
31-50-01 09	25-6NF693-41A
31-50-01 14	25-6NF693-41A

IDENT CH-SECT-UNIT-FIG	PART NUMBER
J-WA	
27-33-00 05	72444-030-0AV2
27-33-00 07	72444-030-0AV2
33-10-10 31	72444-030-0AV2
33-10-20 04	72444-030-0AV2
33-10-20 07	72444-030-0AV2
33-10-20 08	72444-030-0AV2
J-WB	
28-40-30 05	72444-030-0AV2
33-10-05 11	72444-030-0AV2
33-10-10 31	72444-030-0AV2
33-10-20 04	72444-030-0AV2
33-10-20 07	72444-030-0AV2
33-10-20 08	72444-030-0AV2
J-XZ	
24-21-17 03	25-7NF1815-5A
24-21-17 04	25-7NF1815-5A
24-21-17 03	9274-4024
30-30-20 02	9274-4024
24-21-17 04	9274-6205
J-XZ	
24-21-17 03	25-7NF1815-5A
24-21-17 03	9274-6205
J-ZJ	
31-50-05 03	HWBUN1146D10B
J-ZL	
24-50-01 05	A770RSSA
24-50-01 06	A770RSSA
24-50-01 07	A770RSSA
80-10-10 04	A770RSSA
80-10-10 04	25NFZ3947-3
J-ZT	
21-60-10 11	M12883-41-16
21-60-10 11	M300-1264
JA-DA	
33-10-05 05	18046D
33-10-05 07	18046D
33-10-05 08	18046D
33-10-05 09	18046D
33-10-05 11	18046D
JA-DA-P	
33-10-05 05	SA2025
33-10-05 07	SA2025
33-10-05 08	SA2025
33-10-05 09	SA2025
33-10-05 11	SA2025
JA-DA-R	
33-10-05 05	SA2026
33-10-05 07	SA2026
33-10-05 08	SA2026
33-10-05 09	SA2026

IDENT CH-SECT-UNIT-FIG	PART NUMBER
JA-DA-R	
33-10-05 11	SA2026
JA-DAB	
27-33-00 05	M12883-40-19
27-33-00 07	M12883-40-19
27-61-20 04	M12883-40-19
27-33-00 05	M400-1265
27-33-00 07	M400-1265
27-61-20 04	M400-1265
JA-DB	
33-30-05 07	B375-01-001
33-30-05 08	B375-01-001
JA-P2-P	
34-13-01 08	BAEREF000004077
34-13-01 08	6026-22-41PNC0* NDD
JA-P2-R	
34-13-01 08	BAEREF000004329
34-13-01 08	6027-22-41SNC0* NDD
JAA	
32-60-20 02	9006EN3
JAA	
32-60-20 02	9006EN43
JAP2-P	
28-40-10 04	BAEREF000004329
28-40-10 05	BAEREF000004329
28-40-10 04	6027-22-41SNC0* NDD
28-40-10 05	6027-22-41SNC0* NDD
JAP2-R	
28-40-10 04	BAEREF000004077
28-40-10 05	BAEREF000004077
28-40-10 04	6026-22-41PNC0* NDD
28-40-10 05	6026-22-41PNC0* NDD
JAP3-P	
28-40-10 04	BAEREF000004149
28-40-10 05	BAEREF000004149
28-40-10 04	6027-22-41SWC0* NDD
28-40-10 05	6027-22-41SWC0* NDD
JAP3-P	
73-20-10 03	BAEREF000004075
73-20-10 03	6026-22-41PWC0* NDD
JAP3-R	
28-40-10 04	BAEREF000004075

IDENT CH-SECT-UNIT-FIG	PART NUMBER
JAP3-R	
28-40-10 05	BAEREF000004075
28-40-10 04	6026-22-41PWC0* NDD
28-40-10 05	6026-22-41PWC0* NDD
JAP3-R	
73-20-10 03	BAEREF000004149
73-20-10 03	6027-22-41SWC0* NDD
JB	
27-50-10 02	S132-3-22
JB-DA	
33-10-05 05	2TP1-1
33-10-05 07	2TP1-1
33-10-05 09	2TP1-1M
33-10-05 11	2TP1-1M
JB-DA	
33-10-05 07	2TP1-1M
33-10-05 08	2TP1-1M
JBA	
27-33-00 05	72541-030-0AV2
27-33-00 07	72541-030-0AV2
32-60-20 02	72541-030-0AV2
JC	
27-00-10 03	602EN1-6
27-00-10 04	602EN1-6
JC-DA	
33-10-05 05	H1800C
33-10-05 07	H1800C
33-10-05 08	H1800C
33-10-05 09	H1800C
33-10-05 11	H1800C
JC-DAB	
27-33-00 05	M12883-40-19
27-33-00 07	M12883-40-19
27-33-00 05	M400-1265
27-33-00 07	M400-1265
JD	
27-33-00 05	HWBUN1736D5B
27-33-00 07	HWBUN1736D5B
27-50-10 02	HWBUN1736D5B
JD-DA	
33-30-05 07	1TP1-3
33-30-05 08	1TP1-3
JD-DA	
33-30-05 07	1TP1-3M
33-30-05 08	1TP1-3M
JDA	
28-41-30 02	3515000-107
JE-DAB	

IDENT CH-SECT-UNIT-FIG	PART NUMBER
JE-DAB	
27-33-00 05	M12883-40-19
27-33-00 07	M12883-40-19
27-33-00 05	M400-1265
27-33-00 07	M400-1265
JEA	
28-41-30 02	HTE9044-001
28-41-30 02	PVW6G12-10SNS03
JF	
33-40-30 03	GE4505
JG	
33-40-10 05	MS3106R10SL3P
33-40-10 06	MS3106R10SL3P
33-40-10 05	MS3106R10SL3S
33-40-10 06	MS3106R10SL3S
33-40-10 05	30-0538-7
33-40-10 06	30-0538-7
JG-DAB	
27-33-00 05	M12883-40-19
27-33-00 07	M12883-40-19
27-33-00 05	M400-1265
27-33-00 07	M400-1265
JG-DAH	
24-50-01 05	U3626
24-50-01 06	U3626
24-50-01 07	U3626
JH	
28-21-05 02	HWBUN1177S2B
28-21-05 03	HWBUN1177S2B
28-21-05 04	HWBUN1177S2B
JHA	
R 27-33-00 07	9002EN16
JHA	
27-33-00 05	21EN108-6
27-33-00 07	21EN108-6
JJ	
28-21-05 02	TF57160-1
28-21-05 03	TF57160-1
28-21-05 04	TF57160-1
JJ-DAB	
27-33-00 05	M12883-40-19
27-33-00 07	M12883-40-19
27-33-00 05	M400-1265
27-33-00 07	M400-1265
JJA	
R 27-33-00 07	9002EN16
JJA	
27-33-00 05	21EN108-6
27-33-00 07	21EN108-6
JK	
32-60-10 04	72544-030-0AV2

IDENT CH-SECT-UNIT-FIG	PART NUMBER
JK	
32-60-30 02	72544-030-0AV2
32-60-30 03	72544-030-0AV2
JL	
33-40-10 05	G9950-21
33-40-10 06	G9950-21
JL-DAB	
27-33-00 05	M12883-40-24
27-33-00 07	M12883-40-24
27-33-00 05	M402D4A
27-33-00 07	M402D4A
JL-DAG	
30-40-15 07	MFR5-2K4PM1PCT
30-40-15 10	MFR5-2K4PM1PCT
30-40-15 11	MFR5-2K4PM1PCT
30-40-15 12	MFR5-2K4PM1PCT
JL-P	
33-40-10 05	AN3106E10SL3S
33-40-10 06	AN3106E10SL3S
JM	
32-60-10 04	9006EN3
JM	
32-60-10 04	9006EN42
JM	
32-60-10 04	9006EN42
JN	
32-60-10 04	1EN1-8N119
JP	
32-60-30 02	1EN1-14N119
32-60-30 03	1EN1-14N119
32-60-30 02	25-8NW87A
32-60-30 03	25-8NW87A
JP-CG	
24-30-10 02	2132-01-0013
33-10-05 05	2132-01-0013
33-10-05 07	2132-01-0013
33-10-05 08	2132-01-0013
33-10-05 09	2132-01-0013
33-10-05 11	2132-01-0013
JP1-DB-P	
28-41-20 03	RR06E22-55PN059
28-41-30 02	RR06E22-55PN059
JP1-DB-P	
28-41-10 02	RR06E22-55PN059
JP1-DB-P	
28-41-10 03	RR06E22-55PN059
JP1-DB-R	
28-41-20 03	BAEREF000004012
28-41-30 02	BAEREF000004012
28-41-20 03	6027-22-55SNC0* NDD

IDENT CH-SECT-UNIT-FIG	PART NUMBER
JP1-DB-R	
28-41-30 02	6027-22-55SNC0* NDD
JP1-DB-R	
28-41-10 02	BAEREF000004012
28-41-10 03	BAEREF000004012
28-41-10 02	6027-22-55SNC0* NDD
28-41-10 03	6027-22-55SNC0* NDD
JP2-DA-P	
33-30-05 08	125REF000000061
33-30-05 08	6026-22-55PWC0* NDD
JP2-DA-P	
33-30-05 07	125REF000000061
33-30-05 07	6026-22-55PWC0* NDD
JP2-DA-R	
33-30-05 08	BAEREF000004362
33-30-05 08	6027-22-55SWC0* NDD
JP2-DA-R	
33-30-05 07	BAEREF000004362
33-30-05 07	6027-22-55SWC0* NDD
JP2-DB-P	
28-41-20 03	RR06E22-55PW059
28-41-30 02	RR06E22-55PW059
JP2-DB-P	
28-41-10 02	RR06E22-55PW059
28-41-10 03	RR06E22-55PW059
JP2-DB-R	
28-41-20 03	BAEREF000004362
28-41-30 02	BAEREF000004362
28-41-20 03	6027-22-55SWC0* NDD
28-41-30 02	6027-22-55SWC0* NDD
JP2-DB-R	
28-41-10 02	BAEREF000004362
28-41-10 03	BAEREF000004362
28-41-10 02	6027-22-55SWC0* NDD
28-41-10 03	6027-22-55SWC0* NDD
JQ	
27-61-10 08	P6-24015
27-61-10 03	1322ZMK3
27-61-10 04	1322ZMK3
JR	

IDENT CH-SECT-UNIT-FIG	PART NUMBER
JR	
33-40-20 04	GE4581
JR-CG	
24-50-01 05	2132-01-0012
24-50-01 06	2132-01-0012
24-50-01 07	2132-01-0012
33-10-05 05	2132-01-0012
33-10-05 07	2132-01-0012
33-10-05 08	2132-01-0012
33-10-05 09	2132-01-0012
33-10-05 11	2132-01-0012
JS	
33-40-20 04	GE4594
JS-CG	
24-30-20 02	2132-01-0013
24-30-20 03	2132-01-0013
33-10-05 05	2132-01-0013
33-10-05 07	2132-01-0013
33-10-05 08	2132-01-0013
33-10-05 09	2132-01-0013
33-10-05 11	2132-01-0013
JT	
28-21-05 02	9274-4024
28-21-05 03	9274-4024
JT-CG	
24-21-17 03	2132-01-0014
24-21-17 04	2132-01-0014
33-10-05 05	2132-01-0014
33-10-05 07	2132-01-0014
33-10-05 08	2132-01-0014
33-10-05 09	2132-01-0014
33-10-05 11	2132-01-0014
JT-DAH	
30-10-10 11	25-8NF2667-1A
JT-JA	
28-21-05 04	9274-6205
JTA	
27-61-10 08	MRTB20E52-724
JU	
28-41-20 03	HWBUN1146S5B
28-41-30 02	HWBUN1146S5B
JU-CG	
31-50-01 04	C9032-001B
31-50-01 07	C9032-001B
31-50-01 08	C9032-001B
31-50-01 09	C9032-001B
31-50-01 14	C9032-001B
JV	
33-40-20 04	M520U5N
JV	
33-40-20 04	M520U5NL

IDENT CH-SECT-UNIT-FIG	PART NUMBER
JV-CG	
31-50-01 04	C9032-001B
31-50-01 07	C9032-001B
31-50-01 08	C9032-001B
31-50-01 09	C9032-001B
31-50-01 14	C9032-001B
JW	
27-00-10 03	HWBUN1146S3B
27-00-10 04	HWBUN1146S3B
JX	
33-40-20 04	M520U5N
JX	
33-40-20 04	M520U5NL
JX-CG	
31-50-01 04	C9032-001B
31-50-01 07	C9032-001B
31-50-01 08	C9032-001B
31-50-01 09	C9032-001B
31-50-01 14	C9032-001B
JY	
28-41-20 03	3515000-106
JZ-P	
28-40-10 04	LL57L14-19P1-9* 551
28-40-10 05	LL57L14-19P1-9* 551
28-40-10 04	25-8NW7-13A
28-40-10 05	25-8NW7-13A
JZ-R	
28-40-10 04	0107KLM1
28-40-10 05	0107KLM1
JZA	
33-30-05 07	H1800C1
J1	
49-60-30 06	MS3476L16-26P
49-60-30 08	MS3476L16-26P
49-60-30 11	MS3476L16-26P
J1-P	
49-60-30 09	MS3476L16-26P
J10-ZKA	
49-60-30 06	MS3126E22-41P
49-60-30 08	MS3126E22-41P
49-60-30 09	MS3126E22-41P
49-60-30 11	MS3126E22-41P
J11-ZKA	
49-60-30 06	MS3120E22-41S
49-60-30 08	MS3120E22-41S
49-60-30 09	MS3120E22-41S
49-60-30 11	MS3120E22-41S
J115A	
34-30-10 53	MTC100KT1-1101

IDENT CH-SECT-UNIT-FIG	PART NUMBER
J115A	
34-30-10 53	MTC100KT1-1102
34-30-10 53	MTC100YH1-004
J115A	
34-30-10 53	MTC100YC1-005
34-30-10 53	MTC100YH1-004
J116A	
34-30-20 53	MTC100KT1-1101
34-30-20 53	MTC100KT1-1102
34-30-20 53	MTC100YH1-004
J116A	
34-30-20 53	MTC100YC1-005
34-30-20 53	MTC100YH1-004
J12-P	
49-60-30 06	MS3100E10SL4P
49-60-30 08	MS3100E10SL4P
49-60-30 09	MS3100E10SL4P
49-60-30 11	MS3100E10SL4P
J12-R	
49-60-30 06	MS3100E10SL4S
49-60-30 08	MS3100E10SL4S
49-60-30 09	MS3100E10SL4S
49-60-30 11	MS3100E10SL4S
J12-TA2	
30-20-10 02	25-8NF2755A
73-20-01 05	3074256-3
J12-TB2	
30-20-10 02	25-8NF2757A
J135	
34-30-10 53	D38999-24WJ61SN
34-30-10 53	G8802-25N
J136	
34-30-20 53	D38999-24WJ61SN
34-30-20 53	G8802-25N
J14-TA1	
28-40-20 02	D38999-20KG39SN
28-40-30 05	D38999-20KG39SN
28-40-40 02	D38999-20KG39SN
77-40-10 02	D38999-20KG39SN
79-30-10 02	D38999-20KG39SN
28-40-20 02	G8801S21
28-40-30 05	G8801S21
28-40-40 02	G8801S21
77-40-10 02	G8801S21
79-30-10 02	G8801S21
80-10-10 04	MS3450KT14S5S
J14-TA2	
77-40-10 02	D38999-20KG39SN
77-40-10 02	G8801S21
J14-TB1	
28-40-20 02	D38999-20KG39SN

IDENT CH-SECT-UNIT-FIG	PART NUMBER
J14-TB1	
28-40-30 05	D38999-20KG39SN
28-40-40 02	D38999-20KG39SN
79-30-10 02	D38999-20KG39SN
28-40-20 02	G8801S21
28-40-30 05	G8801S21
28-40-40 02	G8801S21
79-30-10 02	G8801S21
80-10-10 04	MS3450KT14S5S
J141	
34-30-10 53	D38999-24WG39SN
34-30-10 53	G8802-21N
J151	
34-30-20 53	D38999-24WG39SN
34-30-20 53	G8802-21N
J154	
34-30-10 53	D38999-24WH53SN
34-30-10 53	G8802-23N
J184	
34-30-20 53	D38999-24WH53SN
34-30-20 53	G8802-23N
J2	
49-60-30 06	MS1417-14N
49-60-30 08	MS1417-14N
49-60-30 09	MS1417-14N
49-60-30 11	MS1417-14N
49-60-30 06	MS3476L14-19S
49-60-30 08	MS3476L14-19S
49-60-30 09	MS3476L14-19S
49-60-30 11	MS3476L14-19S
J2-TA4	
77-20-10 02	MS3417-08N
77-20-10 02	M83723-83K0803N
J2-TB4	
77-20-10 02	MS3417-08N
77-20-10 02	M83723-83K0803N
J212	
34-30-10 53	2-329452-1
J279A	
22-10-40 53	MTCR161-04P
J279B	
22-10-40 53	MTCR161-04P
J280A	
22-10-40 53	MTC100KT1-1101
22-10-40 53	MTC100KT1-1102
22-10-40 53	MTC100YH1-004
J280A	
22-10-40 53	MTC100YC1-005
22-10-40 53	MTC100YH1-004
J291	
34-30-10 53	225551-2

IDENT CH-SECT-UNIT-FIG	PART NUMBER
J3	
49-60-30 06	MS1417-12N
49-60-30 08	MS1417-12N
49-60-30 09	MS1417-12N
49-60-30 11	MS1417-12N
49-60-30 06	MS34676-12-10S
49-60-30 08	MS34676-12-10S
49-60-30 09	MS34676-12-10S
49-60-30 11	MS34676-12-10S
J3-TA5	
73-20-01 05	3074256-3
J4	
49-60-30 06	MS3120F22-41P
49-60-30 08	MS3120F22-41P
49-60-30 09	MS3120F22-41P
49-60-30 11	MS3120F22-41P
J5-DE	
49-60-30 06	RR06E16-99SN059
49-60-30 08	RR06E16-99SN059
49-60-30 09	RR06E16-99SN059
49-60-30 11	RR06E16-99SN059
J629	
23-31-10 58	BAEREF000003187
23-31-10 65	BAEREF000003187
23-31-10 58	6027-14-12SNCO* NDD
23-31-10 65	6027-14-12SNCO* NDD
J630	
23-31-10 58	24TNC75-4-1C
23-31-10 65	24TNC75-4-1C
J7-DE	
49-60-30 06	RR06E16-99SX059
49-60-30 08	RR06E16-99SX059
49-60-30 09	RR06E16-99SX059
49-60-30 11	RR06E16-99SX059
J8-ADAPTO	
73-20-01 05	3074256-3
J9	
49-60-30 06	MS3126E22-41S
49-60-30 08	MS3126E22-41S
49-60-30 09	MS3126E22-41S
49-60-30 11	MS3126E22-41S
K	
27-33-00 05	HWBUN1736D10B
27-33-00 07	HWBUN1736D10B
30-30-20 02	HWBUN1736D10B
27-33-00 05	72444-030-0AV2
27-33-00 07	72444-030-0AV2
30-30-20 02	72444-030-0AV2
K-AA	

IDENT CH-SECT-UNIT-FIG	PART NUMBER
K-AA	
33-10-20 04	25-8NF441-31A
33-10-20 04	5905-99-0135979
K-AB	
33-10-20 04	25-8NF441-31A
33-10-20 04	5905-99-0135979
K-CC	
77-10-10 02	PT08CE14-19SR
77-10-10 02	WL656RSA
K-CG	
24-21-17 03	HWBUN1146D10B
24-21-17 04	HWBUN1146D10B
K-DAG	
30-40-15 07	ND0075-2011
30-40-15 10	ND0075-2011
30-40-15 11	ND0075-2011
30-40-15 12	ND0075-2011
K-GA	
49-60-10 05	25-7NF155A
K-JA	
33-30-05 07	HWBUN1146D10B
K-JA	
34-13-01 08	HWBUN1146D10B
K-S12-DAL	
31-50-01 08	25-7NF785-51A
K-S7-DAL	
31-50-01 04	25-7NF785-51A
31-50-01 07	25-7NF785-51A
31-50-01 08	25-7NF785-51A
31-50-01 09	25-7NF785-51A
31-50-01 14	25-7NF785-51A
K-TQ	
49-60-10 05	MS3126F8-3S
R 49-60-10 05	140-380026-1
49-60-10 05	23080-005
K-TQ	
R 49-60-10 05	MS3126F8-3S
R 49-60-10 05	140-380026-1
R 49-60-10 05	23080-005
K-WA	
33-10-05 05	72444-030-0AV2
33-10-05 07	72444-030-0AV2
33-10-05 08	72444-030-0AV2
33-10-05 09	72444-030-0AV2
33-10-05 11	72444-030-0AV2
33-10-10 31	72444-030-0AV2
33-10-20 04	72444-030-0AV2
33-10-20 07	72444-030-0AV2
33-10-20 08	72444-030-0AV2
K-WB	
77-20-10 02	72444-030-0AV2

IDENT CH-SECT-UNIT-FIG	PART NUMBER
K-WB	
32-60-30 02	72444-030-0AV2
32-60-30 03	72444-030-0AV2
33-10-05 05	72444-030-0AV2
33-10-05 07	72444-030-0AV2
33-10-05 08	72444-030-0AV2
33-10-05 09	72444-030-0AV2
33-10-05 11	72444-030-0AV2
33-10-10 31	72444-030-0AV2
33-10-20 04	72444-030-0AV2
33-10-20 07	72444-030-0AV2
33-10-20 08	72444-030-0AV2
K-XZ	
30-30-20 02	9274-4024
30-40-20 03	9274-4024
30-40-20 05	9274-6205
K-XZ	
30-40-20 03	9274-6205
K-ZJ	
31-50-05 03	HWBUN1146D5B
K-ZKA	
49-60-10 05	K3RAH3-4
K-ZL	
24-50-01 05	A770RSSA
24-50-01 06	A770RSSA
24-50-01 07	A770RSSA
80-10-10 04	A770RSSA
80-10-10 04	25NFZ3947-3
K-ZZ	
49-60-10 05	HWBUN1146D10S
KA	
32-60-20 02	9006EN3
KA	
32-60-20 02	9006EN43
KA-DAB	
27-33-00 05	M12883-41-16
27-33-00 07	M12883-41-16
27-33-00 05	M300-1264
27-33-00 07	M300-1264
KAA	
28-41-20 03	HTE690009
28-41-20 03	PVW6G8-33SNR57
28-41-20 03	PVW6G8-363SNR03
28-41-20 03	6026-8-33SNCON* R DE
KB	
27-33-00 05	72541-030-0AV2
27-33-00 07	72541-030-0AV2
32-60-20 02	72541-030-0AV2
KBA	
28-41-20 03	HTE9044-001

IDENT CH-SECT-UNIT-FIG	PART NUMBER
KBA	
28-41-20 03	PVW6G12-10SNS03
KC-DAB	
27-33-00 05	M12883-41-16
27-33-00 07	M12883-41-16
27-33-00 05	M300-1264
27-33-00 07	M300-1264
KD	
27-33-00 05	HWBUN1736D5B
27-33-00 07	HWBUN1736D5B
KD-DAB	
27-33-00 05	M12883-41-16
27-33-00 07	M12883-41-16
27-33-00 05	M300-1264
27-33-00 07	M300-1264
KDA	
28-41-30 02	3515000-107
KE-DAB	
27-33-00 05	M12883-41-16
27-33-00 07	M12883-41-16
27-33-00 05	M300-1264
27-33-00 07	M300-1264
KEA	
28-41-30 02	HTE9044-001
28-41-30 02	PVW6G12-10SNS03
KF-DAB	
24-30-10 02	M302D4L
24-30-10 02	S302D1B0
KG	
33-40-10 05	MS3106R10SL3P
33-40-10 06	MS3106R10SL3P
33-40-10 05	MS3106R10SL3S
33-40-10 06	MS3106R10SL3S
33-40-10 05	30-0538-8
33-40-10 06	30-0538-8
KG-DAB	
24-30-20 02	M302D4L
24-30-20 02	S302D1B3
KH	
28-21-05 02	HWBUN1177S2B
28-21-05 03	HWBUN1177S2B
28-21-05 04	HWBUN1177S2B
KHA	
27-33-00 07	9002EN16
KHA	
27-33-00 05	21EN108-6
27-33-00 07	21EN108-6
KJ	
28-21-05 02	TF57160-1
28-21-05 03	TF57160-1
28-21-05 04	TF57160-1

IDENT CH-SECT-UNIT-FIG	PART NUMBER
KJA	
R 27-33-00 07	9002EN16
KJA	
27-33-00 05	21EN108-6
27-33-00 07	21EN108-6
KK	
33-40-10 06	72544-030-0AV2
KK	
28-41-10 02	72544-030-0AV2
28-41-10 03	72544-030-0AV2
28-41-20 03	72544-030-0AV2
28-41-30 02	72544-030-0AV2
32-60-10 04	72544-030-0AV2
33-40-10 05	72544-030-0AV2
34-13-01 04	72544-030-0AV2
34-13-01 08	72544-030-0AV2
73-20-10 03	72544-030-0AV2
78-30-05 01	72544-030-0AV2
78-30-05 02	72544-030-0AV2
KM	
32-60-10 04	9006EN3
KM	
32-60-10 04	9006EN42
KM	
32-60-10 04	9006EN42
KN	
32-60-10 04	1EN1-8N119
34-13-01 04	1EN1-8N119
34-13-01 08	1EN1-8N119
KP	
73-20-10 03	1EN1-14N119
73-20-10 03	25-8NW47A
KP	
78-30-05 01	1EN1-14N119
78-30-05 02	1EN1-14N119
KQ	
27-61-10 08	P6-24015
27-61-10 03	1322ZMK3
27-61-10 04	1322ZMK3
KR	
33-40-20 04	GE4581
KS	
33-40-20 04	GE4594
KT	
28-21-05 02	9274-4024
28-21-05 03	9274-4024
KT-JA	
28-21-05 04	9274-6205
KTA	
27-61-10 08	MRTB20E52-724
KU	

IDENT CH-SECT-UNIT-FIG	PART NUMBER
KU	
28-41-20 03	HWBUN1146S5B
28-41-30 02	HWBUN1146S5B
KY	
28-41-20 03	3515000-106
KZ-P	
28-40-10 04	LL57L14-19P1-9* 551
28-40-10 05	LL57L14-19P1-9* 551
28-40-10 04	25-8NW7-13A
28-40-10 05	25-8NW7-13A
KZ-R	
28-40-10 04	0107KLM1
28-40-10 05	0107KLM1
K1-ZKA	
49-60-30 06	M12883-40-19
49-60-30 08	M12883-40-19
49-60-30 09	M12883-40-19
49-60-30 11	M12883-40-19
49-60-30 06	M400-1265
49-60-30 08	M400-1265
49-60-30 09	M400-1265
49-60-30 11	M400-1265
K10-ZKA	
49-60-30 06	M302D4L
49-60-30 08	M302D4L
49-60-30 09	M302D4L
49-60-30 11	M302D4L
49-60-30 06	S302D1B0
49-60-30 08	S302D1B0
49-60-30 09	S302D1B0
49-60-30 11	S302D1B0
K11-ZKA	
49-60-30 06	A703FSS
49-60-30 08	A703FSS
49-60-30 09	A703FSS
49-60-30 11	A703FSS
K12-ZKA	
49-60-30 08	A703FSS
K12-ZKA	
49-60-30 06	A703GS
49-60-30 08	A703GS
49-60-30 09	A703GS
49-60-30 11	A703GS
K2-ZKA	
49-60-30 06	M12883-41-16
49-60-30 08	M12883-41-16
49-60-30 09	M12883-41-16
49-60-30 06	M300-1264
49-60-30 08	M300-1264

IDENT CH-SECT-UNIT-FIG	PART NUMBER
K2-ZKA	
49-60-30 09	M300-1264
K3-ZKA	
49-60-30 06	M12883-41-16
49-60-30 08	M12883-41-16
49-60-30 09	M12883-41-16
49-60-30 11	M12883-41-16
49-60-30 06	M300-1264
49-60-30 08	M300-1264
49-60-30 09	M300-1264
49-60-30 11	M300-1264
K5-ZKA	
49-60-30 06	M12883-41-16
49-60-30 08	M12883-41-16
49-60-30 09	M12883-41-16
49-60-30 11	M12883-41-16
49-60-30 06	M300-1264
49-60-30 08	M300-1264
49-60-30 09	M300-1264
49-60-30 11	M300-1264
K6-ZKA	
49-60-30 06	M12883-41-16
49-60-30 08	M12883-41-16
49-60-30 09	M12883-41-16
49-60-30 11	M12883-41-16
49-60-30 06	M300-1264
49-60-30 08	M300-1264
49-60-30 09	M300-1264
49-60-30 11	M300-1264
K7-ZKA	
49-60-30 06	M12883-41-16
49-60-30 08	M12883-41-16
49-60-30 09	M12883-41-16
49-60-30 11	M12883-41-16
49-60-30 06	M300-1264
49-60-30 08	M300-1264
49-60-30 09	M300-1264
49-60-30 11	M300-1264
K8-ZKA	
49-60-30 06	M12883-41-16
49-60-30 08	M12883-41-16
49-60-30 09	M12883-41-16
49-60-30 11	M12883-41-16
49-60-30 06	M300-1264
49-60-30 08	M300-1264
49-60-30 09	M300-1264
49-60-30 11	M300-1264
L-AB	
33-10-05 05	W22-4R7
33-10-05 07	W22-4R7
L-CA	

IDENT CH-SECT-UNIT-FIG	PART NUMBER
L-CA	
33-10-20 04	6AT4
33-10-20 07	6AT4
33-10-20 08	6AT4
L-CC	
28-40-10 04	WL1901KID1
28-40-10 05	WL1903KID01
L-DAG	
30-40-15 07	ND0075-2011
30-40-15 10	ND0075-2011
30-40-15 11	ND0075-2011
30-40-15 12	ND0075-2011
L-DR	
27-33-00 05	BHGD21TL28WBS5* 95
27-33-00 07	BHGD21TL28WBS5* 95
27-33-00 05	6308-0010A
27-33-00 07	6308-0010A
L-GA	
24-30-20 02	1626
24-30-20 03	1626
24-30-20 02	25-8NF4891-1
24-30-20 03	25-8NF4891-1
L-GG	
30-40-15 07	HWBUN1146D10B
30-40-15 10	HWBUN1146D10B
30-40-15 11	HWBUN1146D10B
30-40-15 12	HWBUN1146D10B
30-40-20 03	HWBUN1146D10B
30-40-20 05	HWBUN1146D10B
49-60-30 08	HWBUN1146D10B
49-60-30 11	HWBUN1146D10B
73-20-02 05	HWBUN1146D10B
73-20-10 03	HWBUN1146D10B
L-GG	
49-60-30 09	72544-030-0AV2
L-S8-DAL	
31-50-01 04	25-7NF785-53A
31-50-01 07	25-7NF785-53A
31-50-01 08	25-7NF785-53A
31-50-01 09	25-7NF785-53A
31-50-01 14	25-7NF785-53A
L-S9-DAL	
31-50-01 04	25-7NF785-53A
31-50-01 07	25-7NF785-53A
31-50-01 08	25-7NF785-53A
31-50-01 09	25-7NF785-53A
31-50-01 14	25-7NF785-53A
L-TQ	
49-60-10 05	HWBUN1146D10B

IDENT CH-SECT-UNIT-FIG	PART NUMBER
L-WA	
27-61-10 08	72444-030-0AV2
L-WA	
28-40-10 04	72444-030-0AV2
28-40-10 05	72444-030-0AV2
28-40-30 05	72444-030-0AV2
33-10-05 05	72444-030-0AV2
33-10-05 07	72444-030-0AV2
33-10-05 08	72444-030-0AV2
33-10-05 09	72444-030-0AV2
33-10-05 11	72444-030-0AV2
33-10-10 31	72444-030-0AV2
33-10-20 04	72444-030-0AV2
33-10-20 07	72444-030-0AV2
33-10-20 08	72444-030-0AV2
77-10-10 02	72444-030-0AV2
77-20-10 02	72444-030-0AV2
78-30-05 01	72444-030-0AV2
78-30-05 02	72444-030-0AV2
79-30-10 02	72444-030-0AV2
L-WB	
27-50-10 02	72444-030-0AV2
27-61-10 03	72444-030-0AV2
27-61-10 04	72444-030-0AV2
28-40-30 05	72444-030-0AV2
31-20-60 02	72444-030-0AV2
33-10-05 05	72444-030-0AV2
33-10-05 07	72444-030-0AV2
33-10-05 08	72444-030-0AV2
33-10-05 09	72444-030-0AV2
33-10-05 11	72444-030-0AV2
33-10-10 31	72444-030-0AV2
33-10-20 04	72444-030-0AV2
33-10-20 07	72444-030-0AV2
33-10-20 08	72444-030-0AV2
77-10-10 02	72444-030-0AV2
77-20-10 02	72444-030-0AV2
79-30-10 02	72444-030-0AV2
L-XZ	
24-21-17 03	9330-4026
24-21-17 04	9330-4026
L-ZJ	
31-50-05 03	BYW54
31-50-05 03	1N4005
L-ZKA	
49-60-10 05	CV7313
49-60-10 05	WBUN1502
L-ZL	
24-50-01 05	9124-9290
24-50-01 06	9124-9290
24-50-01 07	9124-9290

IDENT CH-SECT-UNIT-FIG	PART NUMBER
L-ZL	
49-60-30 06	9124-9290
49-60-30 08	9124-9290
49-60-30 09	9124-9290
LA	
24-30-10 02	SB24-316-7671C
R 24-30-10 02	140-380026-1
24-30-10 02	23080-005
LA	
R 24-30-10 02	140-380026-1
R 24-30-10 02	23080-005
LA-CG	
30-80-10 02	2TP1-7
30-80-10 03	2TP1-7M
LA-CG	
30-80-10 02	2TP1-7M
LA-R	
24-30-10 02	MS3126F8-3S
LC	
30-40-15 07	BA02801-1
30-40-15 10	BA02801-1
30-40-15 11	BA02801-1
30-40-15 12	BA02801-1
LC-EP	
27-61-20 04	M12883-41-16
27-61-20 04	M300-1264
LD-CG	
30-10-10 11	25-7NF1565
LF-CG	
28-21-05 02	2TP1-1
28-21-05 04	2TP1-1
28-21-05 03	2TP1-1M
LF-CG	
28-21-05 02	2TP1-1M
LG-CG	
28-21-05 02	2TP1-1
28-21-05 04	2TP1-1
28-21-05 03	2TP1-1M
LG-CG	
28-21-05 02	2TP1-1M
LG-DE	
49-60-30 09	6240-99-9959182
49-60-30 11	6240-99-9959182
LK-CG	
24-30-10 02	2TP1-7
LK-CG	
24-30-10 02	2TP1-7M
LL	
30-20-10 02	F10A5SCP102-5
30-20-10 02	PTY06CE8-3SSR
LL-CG	

IDENT CH-SECT-UNIT-FIG	PART NUMBER
LL-CG	
24-50-01 05	2TP1-70
24-50-01 06	2TP1-70
24-50-01 07	2TP1-70
LL-CG	
24-50-01 06	2TP1-70M
24-50-01 07	2TP1-70M
LM	
26-10-10 03	MS3417-14N
26-10-10 03	MS3456KT14S5S
26-10-10 03	3001-133
LM-CG	
24-30-20 02	2TP1-7
24-30-20 03	2TP1-7
LN-CG	
24-50-01 05	WC1503
24-50-01 06	WC1503
24-50-01 07	WC1503
LP-CG	
24-50-01 05	WC1503
24-50-01 06	WC1503
24-50-01 07	WC1503
LR-CG	
24-50-01 05	9A60-02-1-6N
24-50-01 06	9A60-02-1-6N
24-50-01 07	9A60-02-1-6N
LT	
30-20-10 02	HTE690013
30-20-10 02	MS3152R10
30-20-10 02	MS3456L10SL3S
LT-CG	
24-21-17 03	8A36-01-1-03N
24-21-17 04	8A36-01-1-03N
LU-CG	
24-21-17 03	2TP1-70
24-21-17 04	2TP1-70M
LU-CG	
24-21-17 03	2TP1-70M
LW-CG	
24-21-17 03	1TP1-31
24-21-17 04	1TP1-31M
LW-CG	
24-21-17 03	1TP1-31M
LX-CG	
24-21-17 03	2TP1-70
24-21-17 04	2TP1-70M
LX-CG	
24-21-17 03	2TP1-70M
L1	
33-10-10 31	B375-01
33-10-05 08	SCA11108-02

IDENT CH-SECT-UNIT-FIG	PART NUMBER
L1	
33-10-05 09	SCA11108-02
33-10-05 11	SCA11108-02
33-10-05 08	25-8MC603-5
33-10-05 09	25-8MC603-5
33-10-05 11	25-8MC603-5
L1-AB	
49-60-30 06	MS3456L10SL4S
49-60-30 08	MS3456L10SL4S
49-60-30 09	MS3456L10SL4S
49-60-30 11	MS3456L10SL4S
L1-WX	
33-10-10 31	B375-01
L1-ZT	
21-60-10 11	MRTB20E57-111
L10	
33-10-10 31	B375-01
L11	
33-10-10 31	B375-01
L12	
33-10-10 31	B375-01
33-10-05 08	25-8NF615-1A
33-10-05 09	25-8NF615-1A
33-10-05 11	25-8NF615-1A
L13	
33-10-10 31	B375-01
33-10-05 08	SCA11108-02
33-10-05 09	SCA11108-02
33-10-05 11	SCA11108-02
33-10-05 08	25-8MC603-6
33-10-05 09	25-8MC603-6
33-10-05 11	25-8MC603-6
L14	
33-10-10 31	B375-01
L15	
33-10-10 31	B375-01
L16	
33-10-10 31	B375-01
L17	
33-10-10 31	B375-01
L18	
33-10-10 31	B375-01
L19	
33-10-10 31	B375-01
L2	
33-10-10 31	B375-01
L2-BA	
49-60-30 06	MS3456L10SL3S
49-60-30 08	MS3456L10SL3S
49-60-30 09	MS3456L10SL3S
49-60-30 11	MS3456L10SL3S

IDENT CH-SECT-UNIT-FIG	PART NUMBER
L2-WX	
33-10-10 31	B375-01
L2-ZT	
21-60-10 11	MRTB20E57-111
L20	
33-10-10 31	B375-01
L21	
33-10-10 31	B375-01
L22	
33-10-10 31	B375-01
L23	
33-10-10 31	B375-01
L24	
33-10-10 31	B375-01
33-10-05 08	25-8NF615-3A
33-10-05 09	25-8NF615-3A
33-10-05 11	25-8NF615-3A
L3	
33-10-10 31	B375-01
L3-AB	
49-60-30 06	MS3456L10SL4S
49-60-30 08	MS3456L10SL4S
49-60-30 09	MS3456L10SL4S
49-60-30 11	MS3456L10SL4S
L3-WX	
33-10-10 31	B375-01
L3-ZT	
21-60-10 11	MRTB20E57-111
L4	
33-10-10 31	B375-01
L4-AB	
49-60-30 06	MS3456L10SL4S
49-60-30 08	MS3456L10SL4S
49-60-30 09	MS3456L10SL4S
49-60-30 11	MS3456L10SL4S
L4-WX	
33-10-10 31	B375-01
L4-ZT	
21-60-10 11	MRTB20E04-111
L5	
33-10-10 31	B375-01
L5-WX	
33-10-10 31	B375-01
L6	
33-10-10 31	B375-01
L7	
33-10-10 31	B375-01
L8	
33-10-10 31	B375-01
L9	
33-10-10 31	B375-01

IDENT CH-SECT-UNIT-FIG	PART NUMBER
M	
27-33-00 05	BYW54
27-33-00 07	BYW54
M-CA	
33-10-20 04	2D2
33-10-20 07	2D2
33-10-20 08	2D2
33-10-20 04	6A43
33-10-20 07	6A43
33-10-20 08	6A43
M-CC	
31-50-01 04	6AT4
31-50-01 07	6AT4
31-50-01 08	6AT4
31-50-01 09	6AT4
M-DE	
49-60-10 05	2TL7
M-GA	
24-30-10 02	1626
24-30-10 02	25-8NF275-1A
M-GG	
30-30-20 02	HWBUN1146D10B
30-40-15 07	HWBUN1146D10B
30-40-15 10	HWBUN1146D10B
30-40-15 11	HWBUN1146D10B
30-40-15 12	HWBUN1146D10B
30-40-20 03	HWBUN1146D10B
30-40-20 05	HWBUN1146D10B
M-WA	
28-40-10 04	72444-030-0AV2
28-40-10 05	72444-030-0AV2
28-40-30 05	72444-030-0AV2
33-10-05 05	72444-030-0AV2
33-10-05 07	72444-030-0AV2
33-10-05 08	72444-030-0AV2
33-10-05 09	72444-030-0AV2
33-10-05 11	72444-030-0AV2
77-10-10 02	72444-030-0AV2
77-20-10 02	72444-030-0AV2
78-30-05 01	72444-030-0AV2
78-30-05 02	72444-030-0AV2
M-WB	
33-10-05 05	72444-030-0AV2
33-10-05 07	72444-030-0AV2
33-10-05 08	72444-030-0AV2
33-10-05 09	72444-030-0AV2
33-10-05 11	72444-030-0AV2
33-10-10 31	72444-030-0AV2
33-10-20 04	72444-030-0AV2
33-10-20 07	72444-030-0AV2
33-10-20 08	72444-030-0AV2

	IDENT CH-SECT-UNIT-FIG	PART NUMBER
	M-WB	
	77-10-10 02	72444-030-0AV2
	77-20-10 02	72444-030-0AV2
	78-30-05 01	72444-030-0AV2
	78-30-05 02	72444-030-0AV2
	M-ZJ	
	31-50-05 03	BYW54
	31-50-05 03	1N4005
	M-ZKA	
	49-60-10 05	5910-99-0124909
	M-ZL	
	24-50-01 05	9124-9290
	24-50-01 06	9124-9290
	24-50-01 07	9124-9290
	MA	
R	24-30-20 02	140-380026-1
R	24-30-20 03	140-380026-1
	24-30-20 02	23080-005
	24-30-20 03	23080-005
	MA	
R	24-30-20 02	140-380026-1
R	24-30-20 03	140-380026-1
R	24-30-20 02	23080-005
R	24-30-20 03	23080-005
	MA-DAC	
	26-20-10 03	BYW54
	MB-DAC	
	26-20-10 03	BYW54
	MC	
	30-40-15 07	BA02801-1
	30-40-15 10	BA02801-1
	30-40-15 11	BA02801-1
	30-40-15 12	BA02801-1
	MC-DAC	
	26-20-10 03	BYW54
	MD-DAC	
	26-20-10 03	BYW54
	ME-DAC	
	21-60-10 08	BYW54
	21-60-10 10	BYW54
	21-60-10 11	BYW54
	24-90-01 05	BYW54
	24-90-01 06	BYW54
	MF-DAC	
	28-41-10 02	BYW54
	28-41-10 03	BYW54
	MG-DAC	
	34-13-01 04	W22-2RPM5PCT
	34-13-01 08	W22-2RPM5PCT
	MK-DAC	
	28-41-10 02	BYW54

	IDENT CH-SECT-UNIT-FIG	PART NUMBER
	MK-DAC	
	28-41-10 03	BYW54
	ML	
	30-20-10 02	F10A5SCP102-5
	30-20-10 02	PTY06CE8-3SSR
	ML-DAC	
	34-13-01 04	W22-2RPM5PCT
	34-13-01 08	W22-2RPM5PCT
	MM	
	26-10-10 03	MS3417-14N
	26-10-10 03	MS3456KT14S5S
	26-10-10 03	3001-133
	MM-DAC	
	28-41-10 02	BYW54
	28-41-10 03	BYW54
	MT	
	30-20-10 02	HTE690013
	30-20-10 02	MS3152R10
	30-20-10 02	MS3456L10SL3S
	M1	
	49-60-30 06	169096-1
	49-60-30 08	169096-1
	49-60-30 09	169096-1
	49-60-30 11	169096-1
	M1-DAG	
	21-31-10 07	MRTB20E04-111
	24-50-01 06	MRTB20E04-111
	24-90-01 05	MRTB20E04-111
	24-90-01 06	MRTB20E04-111
	29-32-10 05	MRTB20E04-111
	30-10-10 11	MRTB20E04-111
	M1-DAG	
R	30-40-15 07	M81714-2DA1
R	30-40-15 10	M81714-2DA1
R	30-40-15 11	M81714-2DA1
R	30-40-15 12	M81714-2DA1
R	30-40-20 03	M81714-2DA1
R	30-40-20 05	M81714-2DA1
	M2	
	49-60-30 09	104026-1
	M2-DAG	
	21-60-10 08	MRTB20E04-111
	21-60-10 10	MRTB20E04-111
	21-60-10 11	MRTB20E04-111
	24-90-01 05	MRTB20E04-111
	24-90-01 06	MRTB20E04-111
	27-33-00 05	MRTB20E04-111
	27-33-00 07	MRTB20E04-111
	M2-DAG	
R	30-40-15 07	M81714-2DA1
R	30-40-15 10	M81714-2DA1

	IDENT CH-SECT-UNIT-FIG	PART NUMBER
	M2-DAG	
R	30-40-15 11	M81714-2DA1
R	30-40-15 12	M81714-2DA1
R	30-40-20 03	M81714-2DA1
R	30-40-20 05	M81714-2DA1
	M2-DE	
	49-60-30 06	BE2315ABCD
	49-60-30 08	BE2315ABCD
	49-60-30 09	BE2315ABCD
	49-60-30 11	BE2315ABCD
	M3-DAG	
R	30-40-15 07	M81714-2DB1
R	30-40-15 10	M81714-2DB1
R	30-40-15 11	M81714-2DB1
R	30-40-15 12	M81714-2DB1
	M3-DE	
	49-60-30 06	BE2321ABCD
	49-60-30 08	BE2321ABCD
	49-60-30 09	BE2321ABCD
	49-60-30 11	BE2321ABCD
	M4-DAG	
	30-40-15 07	MRTB20E09-111
	30-40-15 10	MRTB20E09-111
	30-40-15 11	MRTB20E09-111
	30-40-15 12	MRTB20E09-111
	M4-DE	
	49-60-30 06	BE185129ECXX
	49-60-30 08	BE185129ECXX
	49-60-30 09	BE185129ECXX
	49-60-30 11	BE185129ECXX
	M5-DAG	
	21-31-10 07	MRTB20E57-111
	30-40-15 07	MRTB20E57-111
	30-40-15 10	MRTB20E57-111
	30-40-15 11	MRTB20E57-111
	30-40-15 12	MRTB20E57-111
	M6-DAG	
	26-10-10 03	MRTB20E57-111
	M7-DAG	
	26-10-10 03	MRTB20E57-111
	30-40-15 07	MRTB20E57-111
	30-40-15 10	MRTB20E57-111
	30-40-15 11	MRTB20E57-111
	30-40-15 12	MRTB20E57-111
	M8-DAG	
R	30-40-20 03	591818-1
R	30-40-20 05	591818-1
	M9-DAG	
	30-40-15 07	MRTB20E09-111
	30-40-15 10	MRTB20E09-111
	30-40-15 11	MRTB20E09-111

IDENT CH-SECT-UNIT-FIG	PART NUMBER
M9-DAG	
30-40-15 12	MRTB20E09-111
N	
27-33-00 05	BYW54
27-33-00 07	BYW54
N-CG	
24-21-17 03	HWBUN1146D10B
24-21-17 04	HWBUN1146D10B
N-DAG	
30-40-20 03	ND0075-2001
30-40-20 05	ND0075-2001
N-GA	
49-60-10 05	HDS8SF3J03
49-60-10 05	RSE120074
N-GG	
26-10-10 03	HWBUN1146D10B
28-40-40 02	HWBUN1146D10B
77-10-10 02	HWBUN1146D10B
N-WB	
27-30-10 07	72444-030-0AV2
27-30-10 08	72444-030-0AV2
30-30-20 02	72444-030-0AV2
N-ZJ	
31-50-05 03	BYW54
31-50-05 03	1N4005
N-ZKA	
49-60-10 05	HWBUN1146D10B
N-ZL	
24-50-01 05	BYX38-600
24-50-01 06	BYX38-600
24-50-01 07	BYX38-600
24-50-01 05	BYX48-600
24-50-01 06	BYX48-600
24-50-01 07	BYX48-600
24-50-01 05	CV7313
24-50-01 06	CV7313
24-50-01 07	CV7313
NA	
32-60-10 04	1EN1-15BN111
NA-CG	
30-20-10 02	2TP1-3
NA-CG	
30-20-10 02	2TP1-3M
NB	
32-60-10 04	9005EN17
NB-CG	
30-20-10 02	2TP1-3
NB-CG	
30-20-10 02	2TP1-3M
NC	
32-60-10 04	1EN1-14N119

IDENT CH-SECT-UNIT-FIG	PART NUMBER
NC-CG	
80-10-10 04	2TP1-3
NC-CG	
80-10-10 04	2TP1-3M
ND-CG	
80-10-10 04	2TP1-3
ND-CG	
80-10-10 04	2TP1-3M
ND-P	
32-60-10 04	BAEREF000004490
32-60-10 04	6026-8-33PFCON* DD
ND-R	
32-60-10 04	BAEREF000003294
32-60-10 04	6020-8-33SFCON* DD
NF-CG	
30-20-10 02	2TP1-1
73-20-01 05	2TP1-1
73-20-10 03	2TP1-1M
NF-CG	
30-20-10 02	2TP1-1M
73-20-01 05	2TP1-1M
NG-CG	
30-20-10 02	2TP1-1
73-20-02 05	2TP1-1
73-20-10 03	2TP1-1M
NG-CG	
30-20-10 02	2TP1-1M
NH	
33-50-10 09	18C2
NH-CG	
73-20-02 05	2TP1-10
NHA-CG	
73-20-02 05	BYW54
NL-CG	
21-20-10 03	1TP1-3
NL-CG	
21-20-10 03	1TP1-3M
NL1-P	
33-40-10 06	M3456W10SL4P
33-40-10 06	M85049-52-1-10
NL1-R	
33-40-10 06	M3450W10SL4S
33-40-10 06	M85049-52-1-10
NL2-P	
33-40-10 06	1-480704-0
33-40-10 06	350547-1
NL2-R	
33-40-10 06	1-480705-0
33-40-10 06	350550-1

IDENT CH-SECT-UNIT-FIG	PART NUMBER
NM-CG	
21-20-10 03	1TP1-3
NM-CG	
21-20-10 03	1TP1-3M
NN-CG	
21-30-10 02	1TP1-3
21-30-10 04	1TP1-3
NN-CG	
21-30-10 02	1TP1-3M
21-30-10 04	1TP1-3M
NP-CG	
21-60-20 02	2132-01-0018
21-60-20 03	2132-01-0018
33-10-05 05	2132-01-0018
33-10-05 07	2132-01-0018
33-10-05 08	2132-01-0018
33-10-05 09	2132-01-0018
33-10-05 11	2132-01-0018
NR-CG	
21-60-20 02	2132-01-0015
21-60-20 03	2132-01-0015
33-10-05 05	2132-01-0015
33-10-05 07	2132-01-0015
33-10-05 08	2132-01-0015
33-10-05 09	2132-01-0015
33-10-05 11	2132-01-0015
NS-CG	
33-10-05 05	C52-10
33-10-05 07	C52-10
33-10-05 08	C52-10
33-10-05 09	C52-10
33-10-05 11	C52-10
NT-CG	
21-60-10 08	25-6MC415
21-60-10 10	25-6MC415
21-60-10 11	25-6MC415
21-60-10 08	627578-1
21-60-10 10	627578-1
21-60-10 11	627578-1
NU-CG	
21-60-10 08	1TP1-5
21-60-10 10	1TP1-5
21-60-10 11	1TP1-5
NU-CG	
21-60-10 10	1TP1-5M
21-60-10 11	1TP1-5M
NW-CG	
21-60-10 08	2TP1-10
21-60-10 10	2TP1-10
21-60-10 11	2TP1-10
NW-CG	

IDENT CH-SECT-UNIT-FIG	PART NUMBER
NW-CG	
21-60-10 10	2TP1-10M
21-60-10 11	2TP1-10M
NX	
29-31-10 02	3515000-76
NX-CG	
21-60-10 08	2TP1-10
21-60-10 10	2TP1-10
21-60-10 11	2TP1-10
NX-CG	
21-60-10 10	2TP1-10M
21-60-10 11	2TP1-10M
P-DAG	
30-40-15 07	MFR4-270RPM1PCT
30-40-15 10	MFR4-270RPM1PCT
30-40-15 11	MFR4-270RPM1PCT
30-40-15 12	MFR4-270RPM1PCT
P-GA	
49-60-10 05	HDS8SF3J03
49-60-10 05	RSE120074
P-GG	
30-40-20 03	HWBUN1146D10B
30-40-20 05	HWBUN1146D10B
32-60-10 04	HWBUN1146D10B
49-60-10 05	HWBUN1146D10B
79-30-10 02	HWBUN1146D10B
P-ZJ	
31-50-05 03	BYW54
31-50-05 03	1N4005
P-ZKA	
49-60-10 05	CV7313
49-60-10 05	WBUN1502
P-ZL	
80-10-10 04	BYX38-600
80-10-10 04	BYX48-600
80-10-10 04	CV7313
PB-BA	
33-10-05 05	B375-01
33-10-05 07	25-8NF3587
PB-BA	
33-10-05 07	25-8NF3583
PBA-1	
22-10-40 53	BAEREF000003662
22-10-40 53	GTR71-18NACS1
22-10-40 53	6026-18-32PNC0* NDB
PC-BA	
33-10-05 05	B375-01
PE-BA	
33-10-05 05	B375-01
PF-BA	

IDENT CH-SECT-UNIT-FIG	PART NUMBER
PF-BA	
33-10-05 05	B375-01
PG-BA	
33-10-05 05	B375-01
PH-CG	
33-10-05 05	C52-10
33-10-05 07	C52-10
33-10-05 08	C52-10
33-10-05 09	C52-10
33-10-05 11	C52-10
PJ	
32-60-30 02	D5327
32-60-30 03	D5327
PK	
30-30-10 02	E42024-1
PK-CG	
26-20-10 03	A1003
26-20-10 03	A656
PKA	
30-40-15 11	72441-225-0AV2
30-40-15 12	72441-225-0AV2
PL	
30-30-10 02	E42024-2
PLA	
30-40-15 11	72441-225-0AV2
30-40-15 12	72441-225-0AV2
PLCB	
22-10-40 53	25-8NF3589-3A
22-10-40 53	6027-18-32SNC0* NDB
PM	
30-30-31 02	SD853JF
PN	
30-30-31 02	SD853JF
PN-CG	
26-20-10 03	A1003
26-20-10 03	A656
PP	
24-50-01 05	HWBUN1146D10B
24-50-01 06	HWBUN1146D10B
24-50-01 07	HWBUN1146D10B
28-41-10 02	HWBUN1146D10B
28-41-10 03	HWBUN1146D10B
31-50-01 14	HWBUN1146D10B
33-40-10 05	HWBUN1146D10B
33-40-10 06	HWBUN1146D10B
34-13-01 04	HWBUN1146D10B
34-13-01 08	HWBUN1146D10B
80-10-10 04	HWBUN1146D10B
33-30-15 07	HWBUN1736D5B
PQ	

IDENT CH-SECT-UNIT-FIG	PART NUMBER
PQ	
27-00-10 04	HWBUN1146D10B
27-24-10 02	HWBUN1146D10B
27-24-10 03	HWBUN1146D10B
30-10-10 11	HWBUN1146D10B
32-60-10 04	HWBUN1146D10B
34-13-01 08	HWBUN1146D10B
78-30-05 01	HWBUN1146D10B
78-30-05 02	HWBUN1146D10B
PRTE	
34-30-20 53	82-5375
PRTG	
34-30-10 53	82-5375
PR4-P	
33-40-10 06	MS3126F22-41PW
PR4-R	
33-40-10 06	MS3120F22-41SW
PS	
32-60-10 04	2HM19-1
PSA	
30-40-20 05	72441-225-0AV2
PT	
32-60-10 04	HWBUN1146S3B
PT-CG	
33-10-05 05	C52-10
33-10-05 07	C52-10
33-10-05 08	C52-10
33-10-05 09	C52-10
33-10-05 11	C52-10
PTA	
30-40-20 05	72441-225-0AV2
PU	
30-10-10 11	HWBUN1146S10B
52-70-10 02	HWBUN1146S10B
27-33-00 07	HWB1146S10B
PV-CG	
30-10-10 11	S458-5-191
PW	
30-30-10 02	HWBUN1146S5B
30-30-31 02	HWBUN1146S5B
PX	
30-30-10 02	HWBUN1146S5B
30-30-31 02	HWBUN1146S5B
PX-CG	
33-10-05 05	C52-10
33-10-05 07	C52-10
33-10-05 08	C52-10
33-10-05 09	C52-10
33-10-05 11	C52-10
PY	
26-10-10 03	25-7NF2257-1A

IDENT CH-SECT-UNIT-FIG	PART NUMBER
PY	
26-10-10 03	25-8NF5031-1A
PY	
26-10-10 03	25-8NF6225-1A
P1-CC	
33-10-20 04	L1330
33-10-20 07	25-8MC241-1A
33-10-20 08	25-8MC599-1A
33-10-20 04	6838
P1-CC-R	
33-10-20 07	SCA11108-02
33-10-20 08	SCA11108-02
P1-JA-P	
27-33-00 05	BAEREF000003898
27-33-00 07	BAEREF000003898
33-40-10 05	BAEREF000004313
33-40-10 06	BAEREF000004313
27-00-10 03	BAEREF000004328
27-61-10 03	BAEREF000004328
27-61-10 04	BAEREF000004328
28-21-05 02	BAEREF000004328
28-21-05 03	BAEREF000004328
28-21-05 04	BAEREF000004328
33-40-20 04	BAEREF000004328
33-40-30 03	BAEREF000004328
27-33-00 07	6026-24-61PWC0* NDD
27-33-00 05	6027-24-61PWC0* NDD
27-00-10 03	6027-24-61SWC0* NDD
27-61-10 03	6027-24-61SWC0* NDD
27-61-10 04	6027-24-61SWC0* NDD
28-21-05 02	6027-24-61SWC0* NDD
28-21-05 03	6027-24-61SWC0* NDD
28-21-05 04	6027-24-61SWC0* NDD
33-40-10 05	6027-24-61SWC0* NDD
33-40-10 06	6027-24-61SWC0* NDD
33-40-20 04	6027-24-61SWC0* NDD
33-40-30 03	6027-24-61SWC0* NDD
P1-JA-P	
27-00-10 04	BAEREF000003898

IDENT CH-SECT-UNIT-FIG	PART NUMBER
P1-JA-P	
27-50-10 02	BAEREF000003898
27-61-10 08	BAEREF000003898
32-60-10 04	BAEREF000003898
32-60-20 02	BAEREF000003898
32-60-30 02	BAEREF000003898
32-60-30 03	BAEREF000003898
27-00-10 04	6026-24-61PWC0* NDD
27-50-10 02	6026-24-61PWC0* NDD
27-61-10 08	6026-24-61PWC0* NDD
32-60-10 04	6026-24-61PWC0* NDD
32-60-20 02	6026-24-61PWC0* NDD
32-60-30 02	6026-24-61PWC0* NDD
32-60-30 03	6026-24-61PWC0* NDD
P1-JA-R	
27-00-10 03	BAEREF000003898
27-61-10 03	BAEREF000003898
27-61-10 04	BAEREF000003898
28-21-05 02	BAEREF000003898
28-21-05 03	BAEREF000003898
28-21-05 04	BAEREF000003898
33-40-10 05	BAEREF000003898
33-40-10 06	BAEREF000003898
33-40-20 04	BAEREF000003898
33-40-30 03	BAEREF000003898
27-33-00 05	BAEREF000004313
27-33-00 07	BAEREF000004313
27-00-10 03	6026-24-61PWC0* NDD
27-61-10 03	6026-24-61PWC0* NDD
27-61-10 04	6026-24-61PWC0* NDD
28-21-05 02	6026-24-61PWC0* NDD
28-21-05 03	6026-24-61PWC0* NDD
28-21-05 04	6026-24-61PWC0* NDD
33-40-10 05	6026-24-61PWC0* NDD
33-40-10 06	6026-24-61PWC0* NDD
33-40-20 04	6026-24-61PWC0*

IDENT CH-SECT-UNIT-FIG	PART NUMBER
	NDD
33-40-30 03	6026-24-61PWC0* NDD
27-33-00 05	6027-24-61SWC0* NDD
27-33-00 07	6027-24-61SWC0* NDD
P1-JA-R	
27-00-10 04	BAEREF000004313
32-60-10 04	BAEREF000004313
32-60-20 02	BAEREF000004313
27-50-10 02	BAEREF000004328
27-61-10 08	BAEREF000004328
32-60-30 02	BAEREF000004328
32-60-30 03	BAEREF000004328
27-00-10 04	6027-24-61SWC0* NDD
27-50-10 02	6027-24-61SWC0* NDD
27-61-10 08	6027-24-61SWC0* NDD
32-60-10 04	6027-24-61SWC0* NDD
32-60-20 02	6027-24-61SWC0* NDD
32-60-30 02	6027-24-61SWC0* NDD
32-60-30 03	6027-24-61SWC0* NDD
P1-TG	
73-20-01 05	2113211-1
P1-UD	
73-20-01 05	2113211-1
P1-WX-P	
31-50-05 03	DBMA25S
33-10-10 31	DBMA25S
31-50-05 03	DB20962
31-50-05 03	D20419-16
P1-WX-R	
31-50-05 03	DBMA25P
33-10-10 31	DBMA25P
31-50-05 03	D20418-2
P1-ZT-P	
21-60-10 11	BAEREF000003977
21-60-10 11	6020-12-8PNCON* DC
P1-ZT-R	
21-60-10 11	BAEREF000004175
21-60-10 11	6026-12-8SNCON* DD
P10-CC	

IDENT CH-SECT-UNIT-FIG	PART NUMBER
P10-CC	
33-10-20 04	L1330
33-10-20 04	6838
P12-TA2	
30-20-10 02	D38999-26KG41PN
73-20-01 05	3074256-3
77-10-10 02	3074256-3
P12-TB2	
30-20-10 02	D38999-26KG41PN
77-10-10 02	3074256-4
P129C	
34-30-10 53	BAEREF000003902
34-30-10 53	6026-24-61SWC0* NDD
P129G	
22-10-40 53	BAEREF000003905
22-10-40 53	6026-24-61SZC0* NDD
P129M	
34-30-20 53	BAEREF000003904
34-30-20 53	6026-24-61SYC0* NDD
P129R	
22-10-40 53	BAEREF000003897
34-30-10 53	BAEREF000003897
34-30-20 53	BAEREF000003897
22-10-40 53	6026-22-55SNC0* NDD
34-30-10 53	6026-22-55SNC0* NDD
34-30-20 53	6026-22-55SNC0* NDD
P135	
34-30-10 53	D38999-26WJ61PN
34-30-10 53	G8802-25N
P136	
34-30-20 53	D38999-26WJ61PN
34-30-20 53	G8802-25N
P141	
34-30-10 53	D38999-26WG39PN
34-30-10 53	G8802-21N
P151	
34-30-20 53	D38999-26WG39PN
34-30-20 53	G8802-21N
P154	
34-30-10 53	D38999-26WH53PN
34-30-10 53	G8802-23N
P16-M1	
28-40-40 02	569206
P16-M1	
28-40-40 02	623179

IDENT CH-SECT-UNIT-FIG	PART NUMBER
P16-M2	
28-40-40 02	569206
P16-M2	
28-40-40 02	623179
P184	
34-30-20 53	D38999-26WH53PN
34-30-20 53	G8802-23N
P2-CC	
33-10-20 04	L1330
33-10-05 11	25-9MC75-1A
33-10-20 04	6838
P2-JA-P	
28-21-05 02	BAEFER000004075
28-21-05 03	BAEREF000004075
28-21-05 04	BAEREF000004075
27-33-00 07	BAEREF000004077
34-13-01 04	BAEREF000004077
33-40-20 04	BAEREF000004329
27-33-00 07	6026-22-41PNC0* NDD
34-13-01 04	6026-22-41PNC0* NDD
28-21-05 02	6027-22-41SNC0* NDD
28-21-05 03	6027-22-41SNC0* NDD
28-21-05 04	6027-22-41SNC0* NDD
33-40-20 04	6027-22-41SNC0* NDD
P2-JA-P	
32-60-10 04	BAEREF000004077
32-60-20 02	BAEREF000004077
32-60-10 04	6026-22-41PNC0* NDD
32-60-20 02	6026-22-41PNC0* NDD
P2-JA-R	
28-21-05 02	BAEREF000004077
28-21-05 03	BAEREF000004077
28-21-05 04	BAEREF000004077
33-40-20 04	BAEREF000004077
27-33-00 07	BAEREF000004329
34-13-01 04	BAEREF000004329
28-21-05 02	6026-22-41PNC0* NDD
28-21-05 03	6026-22-41PNC0* NDD
28-21-05 04	6026-22-41PNC0* NDD
33-40-20 04	6026-22-41PNC0*

IDENT CH-SECT-UNIT-FIG	PART NUMBER
	NDD
27-33-00 07	6027-22-41SNC0*
	NDD
34-13-01 04	6027-22-41SNC0*
	NDD
P2-JA-R	
32-60-10 04	BAEREF000004313
32-60-20 02	BAEREF000004329
32-60-20 02	6027-22-41SNC0*
	NDD
32-60-10 04	6027-24-61SWC0*
	NDD
P2-P	
27-33-00 05	BAEREF000004329
27-33-00 05	6027-22-41SNC0*
	NDD
P2-P	
27-33-00 05	BAEREF000004077
27-33-00 05	6026-22-41PNC0*
	NDD
P2-R	
27-33-00 05	BAEREF000004329
27-33-00 05	6027-22-41SNC0*
	NDD
P211P1	
34-30-10 53	225550-2
P211P2	
34-30-20 53	225550-2
P212	
34-30-10 53	2-329444-1
P217	
34-30-10 53	225830-2
P23-TZ	
73-20-01 05	3074256-3
P26-M1	
28-40-40 02	HTE60010
P26-M2	
28-40-40 02	HTE60010
P263	
22-10-40 53	DDMA50S
22-10-40 53	DD20964
22-10-40 53	D20420-12
P279A	
22-10-40 53	MTCR161-04S
P279B	
22-10-40 53	MTCR161-04S
P280A	
22-10-40 53	MTC100KT1-1103
22-10-40 53	MTC100KT1-1104
22-10-40 53	MTC100YH1-003
P280A	

IDENT CH-SECT-UNIT-FIG	PART NUMBER
P280A	
22-10-40 53	MTC100YC1-006
22-10-40 53	MTC100YH1-003
P291	
34-30-10 53	225550-2
P3-CC	
33-10-20 04	L1330
33-10-20 04	6838
P3-JA-P	
33-40-10 05	BAEREF000004157
33-40-10 06	BAEREF000004157
33-40-10 05	6027-22-41SWC0*
	NDD
33-40-10 06	6027-22-41SWC0*
	NDD
P3-JA-P	
78-30-05 01	BAEREF000004075
78-30-05 02	BAEREF000004075
78-30-05 01	6026-22-41PWC0*
	NDD
78-30-05 02	6026-22-41PWC0*
	NDD
P3-JA-R	
33-40-10 05	BAEREF000004075
33-40-10 06	BAEREF000004075
33-40-10 05	6026-22-41PWC0*
	NDD
33-40-10 06	6026-22-41PWC0*
	NDD
P3-JA-R	
78-30-05 01	BAEREF000004149
78-30-05 02	BAEREF000004149
78-30-05 01	6027-22-41SWC0*
	NDD
78-30-05 02	6027-22-41SWC0*
	NDD
P3-TA5	
73-20-01 05	3074256-3
P3-TZ	
73-20-01 05	2113211-1
P4-CC	
33-10-20 04	L1330
33-10-20 04	6838
P4-JA-P	
28-41-10 02	BAEREF000004011
28-41-10 03	BAEREF000004011
28-41-10 02	6026-22-55PNC0*
	NDD
28-41-10 03	6026-22-55PNC0*
	NDD
P4-JA-P	

IDENT CH-SECT-UNIT-FIG	PART NUMBER
P4-JA-P	
28-41-20 03	BAEREF000004011
28-41-30 02	BAEREF000004011
28-41-20 03	6026-22-55PNC0* NDD
28-41-30 02	6026-22-55PNC0* NDD
P4-JA-R	
28-41-10 02	BAEREF000004012
28-41-10 03	BAEREF000004012
28-41-10 02	6027-22-55SNC0* NDD
28-41-10 03	6027-22-55SNC0* NDD
P4-JA-R	
28-41-20 03	BAEREF000004012
28-41-30 02	BAEREF000004012
28-41-20 03	6027-22-55SNC0* NDD
28-41-30 02	6027-22-55SNC0* NDD
P4-LHE	
30-20-10 02	223-662-9301
P4-LHE	
30-20-10 02	3074216-1
P4-RHE	
30-20-10 02	223-662-9301
P4-RHE	
30-20-10 02	3074216-1
P5-CC	
33-10-20 04	L1330
33-10-20 04	6838
P527P1	
34-30-10 53	BAEREF000003408
34-30-10 53	GTR42-22NACS1
34-30-10 53	6026-22-55SNC0* NDB
P527P5	
34-30-20 53	BAEREF000003400
34-30-20 53	GTR62-22NACS1
34-30-20 53	6026-22-55SWC0* NDB
P6-CC	
33-10-20 04	L1330
33-10-20 07	25-8MC535-1A
33-10-20 08	25-8MC621-1A
33-10-20 04	6838
P6-CC-R	
33-10-20 07	SCA11108-02
33-10-20 08	SCA11108-02
P626	

IDENT CH-SECT-UNIT-FIG	PART NUMBER
P626	
23-31-20 52	HH12N
P629	
23-31-20 52	BAEREF000003509
23-31-20 52	6026-14-12PNC0* NDD
P630	
23-31-10 58	11TNC75-4-2C
23-31-10 65	11TNC75-4-2C
P7-CC	
33-10-20 04	L1330
33-10-20 04	6838
P8	
49-60-30 06	MS3106E24-28S
49-60-30 08	MS3106E24-28S
49-60-30 09	MS3106E24-28S
49-60-30 11	MS3106E24-28S
P8-CC	
33-10-20 04	L1330
33-10-20 04	6838
P8-TA6	
73-20-01 05	3074256-3
77-10-10 02	3074256-3
P8-TB6	
77-10-10 02	3074256-4
P801A	
78-30-05 01	BAEREF000004560
78-30-05 02	BAEREF000004560
78-30-05 01	DPX2MA455-455-* 33B0001
78-30-05 02	DPX2MA455-455-* 33B0001
78-30-05 02	5400612-1
P801B	
78-30-05 01	BAEREF000004560
78-30-05 02	BAEREF000004560
78-30-05 01	DPX2MA455-455-* 33B0001
78-30-05 02	DPX2MA455-455-* 33B0001
78-30-05 02	5400612-1
P802	
78-30-05 01	DEMA9S
78-30-05 02	DEMA9S
78-30-05 01	DE44994
78-30-05 02	DE44994
78-30-05 01	D20419
78-30-05 02	D20419
78-30-05 02	5400619-1
P803	
78-30-05 01	MS3126F14-19S

IDENT CH-SECT-UNIT-FIG	PART NUMBER
P803	
78-30-05 02	MS3126F14-19S
P804	
78-30-05 01	205209-1
78-30-05 02	205209-1
78-30-05 01	206478-4
78-30-05 02	206478-4
78-30-05 02	5412600-1
P807	
78-30-05 01	MS3126F12-10S
78-30-05 02	MS3126F12-10S
P808	
78-30-05 01	MS3126F12-10S
78-30-05 02	MS3126F12-10S
P809	
78-30-05 01	PT08SE12-8SSR
78-30-05 02	PT08SE12-8SSR
P810	
78-30-05 01	PT08SE12-8SSR
78-30-05 02	PT08SE12-8SSR
P811	
78-30-05 01	MS3057-4A
78-30-05 02	MS3057-4A
78-30-05 01	MS3108R10SL3S
78-30-05 02	MS3108R10SL3S
P812	
78-30-05 01	MS3057-4A
78-30-05 02	MS3057-4A
78-30-05 01	MS3108R10SL3S
78-30-05 02	MS3108R10SL3S
P9-CC	
33-10-20 04	L1330
33-10-20 04	6838
Q-CC	
31-50-01 04	140-4537
31-50-01 07	140-4537
31-50-01 08	140-4537
31-50-01 09	140-4537
Q-DAG	
30-40-15 07	MFR4-270RPM1PCT
30-40-15 10	MFR4-270RPM1PCT
30-40-15 11	MFR4-270RPM1PCT
30-40-15 12	MFR4-270RPM1PCT
Q-GG	
24-30-10 02	HWBUN1146D10B
24-30-20 02	HWBUN1146D10B
24-30-20 03	HWBUN1146D10B
QA	
21-60-20 02	CA3106R12S3SF80
21-60-20 03	CA3106R12S3SF80
21-60-20 02	S110G50-1957

IDENT CH-SECT-UNIT-FIG	PART NUMBER
QA	
21-60-20 03	S110G50-1957
QB	
33-31-10 04	LHA1BG105-2
QB	
33-31-10 04	MS24523-22
QC-GK	
30-40-15 07	CB02701
30-40-15 10	CB02701
30-40-15 11	CB02701
30-40-15 12	CB02701
QD	
30-40-15 07	CB02701
30-40-15 10	CB02701
30-40-15 11	CB02701
30-40-15 12	CB02701
QE	
21-60-10 08	MS3106R14S5S
21-60-10 10	MS3106R14S5S
21-60-10 11	MS3106R14S5S
21-60-10 08	321776-1-1
21-60-10 10	321776-1-1
21-60-10 11	321776-1-1
QG	
21-60-10 08	MS3106R14S5S
21-60-10 10	MS3106R14S5S
21-60-10 11	MS3106R14S5S
21-60-10 08	104968
21-60-10 10	104968
21-60-10 11	104968
QH	
21-60-10 08	MS3108R10SL3S
21-60-10 10	MS3108R10SL3S
21-60-10 11	MS3108R10SL3S
21-60-10 08	104568-3
21-60-10 10	104568-3
21-60-10 11	104568-3
QJ	
21-60-10 08	MS3108R14-5S
21-60-10 10	MS3108R14-5S
21-60-10 11	MS3108R14-5S
21-60-10 08	321262-1
21-60-10 10	321262-1
21-60-10 11	321262-1
QM	
29-32-10 05	150T283
QM-R	
29-32-10 05	MC11E8-3S
QN	
29-32-10 05	695-4-20
QN-R	

IDENT CH-SECT-UNIT-FIG	PART NUMBER
QN-R	
29-32-10 05	BAEREF000003102
29-32-10 05	GTR42-10NACS1
29-32-10 05	6026-10-6SNCON* DB
QP	
29-32-10 05	HE15185-4SN1
QP-R	
29-32-10 05	LPT06F8-33S
QQ	
29-32-10 05	HE15185-4SN1
QQ-R	
29-32-10 05	LPT06F8-33S
QR	
26-10-30 03	150D01-100-2
QS	
26-10-30 03	150D01-100-2
QT	
26-10-30 03	150D01-100-2
QU	
26-10-30 03	150D01-100-2
QV	
26-10-30 03	150D01-100-2
QW	
26-10-30 03	150D01-100-2
R	
33-10-10 31	RD328B1B3
R-GA	
49-60-10 05	HDD4SF2H06
49-60-10 05	418538
R-GG	
32-60-10 04	HWBUN1146D10B
49-60-10 05	HWBUN1146D10B
77-20-10 02	HWBUN1146D10B
78-30-05 01	HWBUN1146D10B
78-30-05 02	HWBUN1146D10B
R-JA	
28-41-20 03	BYW54
28-41-20 03	1N4005
28-41-20 03	25-7NF1815-5A
R-ZJ	
31-50-05 03	BYW54
31-50-05 03	1N4005
R-ZL	
24-50-01 05	BYX38-600
24-50-01 06	BYX38-600
24-50-01 07	BYX38-600
24-50-01 05	BYX48-600
24-50-01 06	BYX48-600
24-50-01 07	BYX48-600
24-50-01 05	CV7313

IDENT CH-SECT-UNIT-FIG	PART NUMBER
R-ZL	
24-50-01 06	CV7313
24-50-01 07	CV7313
RA-DAJ	
21-31-10 07	5905-99-0140575
RB	
27-33-00 05	10201
27-33-00 07	10201-1
RB	
27-33-00 05	10201-1
RB-DAJ	
30-10-10 11	5905-99-0135777
RC-DAB	
24-50-01 05	5905-99-0140445
24-50-01 06	5905-99-0140445
24-50-01 07	5905-99-0140445
RC-SSU1	
27-33-00 05	C82106-4
27-33-00 07	C82106-4
27-33-00 05	DPXBNA45333S04
27-33-00 07	DPXBNA45333S04
27-33-00 05	20745-8
27-33-00 07	20745-8
RC-SSU1	
27-33-00 05	C82106-5
27-33-00 07	C82106-5
27-33-00 05	DPXBNA45333S04
27-33-00 07	DPXBNA45333S04
27-33-00 05	20745-8
27-33-00 07	20745-8
RD-DAB	
24-50-01 05	5905-99-0140302
24-50-01 06	5905-99-0140302
24-50-01 07	5905-99-0140302
RD-SSU2	
27-33-00 05	C82106-4
27-33-00 07	C82106-4
27-33-00 05	DPXBNA45333S04
27-33-00 07	DPXBNA45333S04
27-33-00 05	20745-8
27-33-00 07	20745-8
RD-SSU2	
27-33-00 05	C82106-5
27-33-00 07	C82106-5
27-33-00 05	DPXBNA45333S04
27-33-00 07	DPXBNA45333S04
27-33-00 05	20745-8
27-33-00 07	20745-8
RE	
30-40-15 07	NF24016-151
30-40-15 12	NF24016-157

IDENT CH-SECT-UNIT-FIG	PART NUMBER
RE	
30-40-15 07	NF24016-157
30-40-15 10	NF24016-157
30-40-15 11	NF24016-157
RE-DAB	
24-50-01 05	BAEREF000004352
24-50-01 06	BAEREF000004352
24-50-01 07	BAEREF000004352
24-50-01 05	403CC80R6PM0-5* PCT
24-50-01 06	403CC80R6PM0-5* PCT
24-50-01 07	403CC80R6PM0-5* PCT
RE209	
34-30-10 53	622-6137-001
RE244	
34-30-20 53	622-6137-001
RF-DAB	
24-50-01 05	BAEREF000004352
24-50-01 06	BAEREF000004352
24-50-01 07	BAEREF000004352
24-50-01 05	403CC80R6PM0-5* PCT
24-50-01 06	403CC80R6PM0-5* PCT
24-50-01 07	403CC80R6PM0-5* PCT
RG	
30-40-15 07	NF24016-152
30-40-15 12	NF24016-158
RG	
30-40-15 07	NF24016-158
30-40-15 10	NF24016-158
30-40-15 11	NF24016-158
RG-DAB	
21-60-10 10	BYW54
21-60-10 11	BYW54
RH	
30-40-20 03	NH24016-91
30-40-20 05	NH24016-91
RH-CG	
26-20-10 03	2TP1-7
RH-CG	
26-20-10 03	2TP1-7M
RH-DAB	
21-60-10 10	BYW54
21-60-10 11	BYW54
RH-DAJ	
31-20-35 02	W21-1R5
31-20-35 03	W21-1R5

IDENT CH-SECT-UNIT-FIG	PART NUMBER
RJ	
30-40-20 03	NH24016-92
30-40-20 05	NH24016-92
RJ-DAB	
27-61-10 08	BYW54
RJ-DAJ	
31-20-35 02	W21R56
31-20-35 03	W21R56
RK-BA	
33-10-05 05	A6795C
33-10-05 07	A6795C
33-10-05 08	A6795C
33-10-05 09	A6795C
33-10-05 11	A6795C
RK-CG	
26-10-10 03	C9032-047
RL-BA	
27-30-10 07	HWBUN1736D5B
27-61-20 04	HWBUN1736D5B
78-30-05 01	HWBUN1736D5B
78-30-05 02	HWBUN1736D5B
RL-CG	
26-10-10 03	99-222
RM-CG	
26-10-10 03	99-222
RN-CG	
26-10-10 03	C9032-048
RQ-BA	
32-60-10 04	1HSN64
RR-BA	
26-10-10 03	HWBUN1146D10B
27-24-10 02	HWBUN1146D10B
27-24-10 03	HWBUN1146D10B
28-42-10 02	HWBUN1146D10B
32-60-10 04	HWBUN1146D10B
33-10-05 05	HWBUN1146D10B
33-10-05 07	HWBUN1146D10B
33-10-05 08	HWBUN1146D10B
33-10-05 09	HWBUN1146D10B
33-10-05 11	HWBUN1146D10B
28-41-10 02	HWBUN1146D5B
28-41-10 03	HWBUN1146D5B
80-10-10 04	1HSN64
RR-CG	
26-20-10 03	2TP1-7
RR-CG	
26-20-10 03	2TP1-7M
RS	
27-33-00 05	B1443-1
27-33-00 07	B1443-1
RT-BA	

IDENT CH-SECT-UNIT-FIG	PART NUMBER
RT-BA	
33-10-05 05	A4896A7-24
33-10-05 07	A4896A7-24
33-10-05 08	A4896A7-24
33-10-05 09	A4896A7-24
33-10-05 11	A4896A7-24
RT-CG	
33-40-15 02	2TP1-1
33-40-20 04	2TP1-1
RT-CG	
33-40-15 02	2TP1-1M
33-40-20 04	2TP1-1M
RU-BA	
33-10-05 05	A6795C
33-10-05 07	A6795C
33-10-05 08	A6795C
33-10-05 09	A6795C
33-10-05 11	A6795C
RU-CG	
33-40-15 02	2TP1-1
33-40-20 04	2TP1-1
RU-CG	
33-40-15 02	2TP1-1M
33-40-20 04	2TP1-1M
RV-BA	
27-61-20 04	HWBUN1146D5B
73-20-01 05	HWBUN1146D5B
73-20-02 05	HWBUN1146D5B
RW	
27-33-00 05	B1443-1
27-33-00 07	B1443-1
RX	
30-10-10 11	9201000-245
R1-ZKA	
49-60-30 06	2909-2015
49-60-30 08	2909-2015
49-60-30 09	2909-2015
49-60-30 11	2909-2015
S	
33-10-05 05	140-4538
33-10-05 07	140-4538
33-10-05 08	140-4538
33-10-05 09	140-4538
33-10-05 11	140-4538
S-CC	
77-10-10 02	PT08CE14-19SR
77-10-10 02	WL717RSA
S-DAE	
33-10-05 05	BDX67A
33-10-05 07	BDX67A
33-10-05 08	BDX67A

IDENT CH-SECT-UNIT-FIG	PART NUMBER
S-DAE	
33-10-05 09	BDX67A
33-10-05 11	BDX67A
33-10-20 04	BDX67A
33-10-20 07	BDX67A
33-10-20 08	BDX67A
31-50-01 04	HWBUN1736S10B
31-50-01 07	HWBUN1736S10B
31-50-01 08	HWBUN1736S10B
31-50-01 09	HWBUN1736S10B
31-50-01 14	HWBUN1736S10B
33-10-05 05	HWBUN1736S10B
33-10-05 07	HWBUN1736S10B
33-10-05 08	HWBUN1736S10B
33-10-05 09	HWBUN1736S10B
33-10-05 11	HWBUN1736S10B
33-10-20 04	HWBUN1736S10B
33-10-20 07	HWBUN1736S10B
33-10-20 08	HWBUN1736S10B
31-50-01 04	25-8NF405-503A
31-50-01 07	25-8NF405-503A
31-50-01 08	25-8NF405-503A
31-50-01 09	25-8NF405-503A
31-50-01 14	25-8NF405-503A
33-10-05 05	25-8NF405-503A
33-10-05 07	25-8NF405-503A
33-10-05 08	25-8NF405-503A
33-10-05 09	25-8NF405-503A
33-10-05 11	25-8NF405-503A
33-10-20 04	25-8NF405-503A
33-10-20 07	25-8NF405-503A
33-10-20 08	25-8NF405-503A
33-10-05 05	5905-99-0135622
33-10-05 07	5905-99-0135622
33-10-05 08	5905-99-0135622
33-10-05 09	5905-99-0135622
33-10-05 11	5905-99-0135622
33-10-20 04	5905-99-0135622
33-10-20 07	5905-99-0135622
33-10-20 08	5905-99-0135622
33-10-05 05	5905-99-0135626
33-10-05 07	5905-99-0135626
33-10-05 08	5905-99-0135626
33-10-05 09	5905-99-0135626
33-10-05 11	5905-99-0135626
33-10-20 04	5905-99-0135626
33-10-20 07	5905-99-0135626
33-10-20 08	5905-99-0135626
S-DE	
49-60-10 05	S546-3-50
S-GA	

IDENT CH-SECT-UNIT-FIG	PART NUMBER
S-GA	
24-21-17 03	LDA200B18C
24-21-17 04	LDA200B18C
S-GG	
26-10-10 03	HWBUN1146D10B
33-30-15 07	HWBUN1146D10B
78-30-05 01	HWBUN1146D10B
78-30-05 02	HWBUN1146D10B
S-GG	
77-10-10 02	HWBUN1146D10B
77-10-10 02	1N4005
S-JA	
28-41-10 02	1N4005
28-41-10 03	1N4005
S-S4-DAL	
31-50-01 04	25-8NF355-17A
31-50-01 07	25-8NF355-17A
31-50-01 09	25-8NF355-17A
S-S4-DAL	
31-50-01 08	25-8NF355-17A
S-ZJ	
31-50-05 03	1N4005
S-ZL	
24-50-01 05	BYX38-600
24-50-01 06	BYX38-600
24-50-01 07	BYX38-600
24-50-01 05	BYX48-600
24-50-01 06	BYX48-600
24-50-01 07	BYX48-600
24-50-01 05	CV7313
24-50-01 06	CV7313
24-50-01 07	CV7313
SA	
30-10-10 11	25-8NF4805-1A
SA-DAJ	
26-10-10 03	CV7313
SB-DAJ	
30-20-10 02	CV7313
SC-DAJ	
30-20-10 02	CV7313
SC-P	
26-10-10 03	MTCX2X200-200
27-33-00 05	MTCX2X200-200
27-33-00 07	MTCX2X200-200
30-30-20 02	MTCX2X200-200
33-10-05 05	MTCX2X200-200
33-10-05 07	MTCX2X200-200
33-10-05 08	MTCX2X200-200
33-10-05 09	MTCX2X200-200
33-10-05 11	MTCX2X200-200
33-30-05 08	MTCX2X200-200

IDENT CH-SECT-UNIT-FIG	PART NUMBER
SC-P	
26-10-10 03	MTC100KT2-1103
27-33-00 05	MTC100KT2-1103
27-33-00 07	MTC100KT2-1103
30-30-20 02	MTC100KT2-1103
33-10-05 05	MTC100KT2-1103
33-10-05 07	MTC100KT2-1103
33-10-05 08	MTC100KT2-1103
33-10-05 09	MTC100KT2-1103
33-10-05 11	MTC100KT2-1103
33-30-05 08	MTC100KT2-1103
26-10-10 03	MTC100YH2-009
27-33-00 05	MTC100YH2-009
27-33-00 07	MTC100YH2-009
30-30-20 02	MTC100YH2-009
33-10-05 05	MTC100YH2-009
33-10-05 07	MTC100YH2-009
33-10-05 08	MTC100YH2-009
33-10-05 09	MTC100YH2-009
33-10-05 11	MTC100YH2-009
33-30-05 08	MTC100YH2-009
SC-P	
26-10-10 03	MTC100YC1-003
27-33-00 07	MTC100YC1-003
30-30-20 02	MTC100YC1-003
33-10-05 09	MTC100YC1-003
33-10-05 11	MTC100YC1-003
33-30-05 08	MTC100YC1-003
26-10-10 03	MTC100YC1-004
27-33-00 07	MTC100YC1-004
30-30-20 02	MTC100YC1-004
33-10-05 09	MTC100YC1-004
33-10-05 11	MTC100YC1-004
33-30-05 08	MTC100YC1-004
26-10-10 03	MTC100YH2-009
27-33-00 07	MTC100YH2-009
30-30-20 02	MTC100YH2-009
33-10-05 09	MTC100YH2-009
33-10-05 11	MTC100YH2-009
33-30-05 08	MTC100YH2-009
SC-R	
33-10-05 05	MTCX2X200-X200
33-10-05 07	MTCX2X200-X200
33-10-05 08	MTCX2X200-X200
33-10-05 09	MTCX2X200-X200
33-10-05 11	MTCX2X200-X200
26-10-10 03	MTCX2X200-200
27-33-00 05	MTCX2X200-200
27-33-00 07	MTCX2X200-200
30-30-20 02	MTCX2X200-200
33-30-05 08	MTCX2X200-200

IDENT CH-SECT-UNIT-FIG	PART NUMBER
SC-R	
26-10-10 03	MTC100KT2-1101
27-33-00 05	MTC100KT2-1101
27-33-00 07	MTC100KT2-1101
30-30-20 02	MTC100KT2-1101
33-10-05 05	MTC100KT2-1101
33-10-05 07	MTC100KT2-1101
33-10-05 08	MTC100KT2-1101
33-10-05 09	MTC100KT2-1101
33-10-05 11	MTC100KT2-1101
33-30-05 08	MTC100KT2-1101
26-10-10 03	MTC100YH2-010
27-33-00 05	MTC100YH2-010
27-33-00 07	MTC100YH2-010
30-30-20 02	MTC100YH2-010
33-10-05 05	MTC100YH2-010
33-10-05 07	MTC100YH2-010
33-10-05 08	MTC100YH2-010
33-10-05 09	MTC100YH2-010
33-10-05 11	MTC100YH2-010
33-30-05 08	MTC100YH2-010
SC-R	
26-10-10 03	MTC100YC1-001
27-33-00 07	MTC100YC1-001
30-30-20 02	MTC100YC1-001
33-10-05 09	MTC100YC1-001
33-10-05 11	MTC100YC1-001
33-30-05 08	MTC100YC1-001
26-10-10 03	MTC100YC1-002
27-33-00 07	MTC100YC1-002
30-30-20 02	MTC100YC1-002
33-10-05 09	MTC100YC1-002
33-10-05 11	MTC100YC1-002
33-30-05 08	MTC100YC1-002
26-10-10 03	MTC100YH2-010
27-33-00 07	MTC100YH2-010
30-30-20 02	MTC100YH2-010
33-10-05 09	MTC100YH2-010
33-10-05 11	MTC100YH2-010
33-30-05 08	MTC100YH2-010
SD-DAJ	
21-31-10 07	CV7313
32-60-10 04	CV7313
SE-DAJ	
21-31-10 07	CV7313
SF	
52-70-10 02	BZ2RQ1T04
SF-DAJ	
21-31-10 07	CV7313
SG-DAJ	
32-60-10 04	CV7313

IDENT CH-SECT-UNIT-FIG	PART NUMBER
SH-P	
21-60-10 10	BAEREF000004029
21-60-20 03	BAEREF000004029
21-60-10 10	6026-10-6PNCON* DD
21-60-20 03	6026-10-6PNCON* DD
SH-R	
21-60-10 10	BAEREF000004180
21-60-20 03	BAEREF000004180
21-60-10 10	6027-10-6SNCON* DD
21-60-20 03	6027-10-6SNCON* DD
SJ	
21-60-10 08	25-7FC379-97A
21-60-10 10	25-7FC379-97A
21-60-10 11	25-7FC379-97A
SJ-DAJ	
33-10-05 05	CV7313
33-10-05 07	CV7313
33-10-05 08	CV7313
33-10-05 09	CV7313
33-10-05 11	CV7313
SK	
52-70-10 02	BZ2RQ1T04
SK-DAJ	
33-10-05 05	CV7313
33-10-05 07	CV7313
33-10-05 08	CV7313
33-10-05 09	CV7313
33-10-05 11	CV7313
SL	
21-60-10 08	MS3126E10-6S
21-60-10 10	MS3126E10-6S
21-60-10 11	MS3126E10-6S
21-60-10 08	607148-1
21-60-10 10	607148-1
21-60-10 11	607148-1
SL-DAJ	
34-13-01 04	CV7313
34-13-01 08	CV7313
SM-DAJ	
34-13-01 04	CV7313
34-13-01 08	CV7313
SN	
49-60-10 05	HWBUN1146D10B
SN-DAJ	
34-13-01 04	CV7313
34-13-01 08	CV7313
SP-DAJ	

IDENT CH-SECT-UNIT-FIG	PART NUMBER
SP-DAJ	
34-13-01 04	CV7313
34-13-01 08	CV7313
SQ	
31-50-01 14	HWBUN1146D10B
33-30-05 07	HWBUN1146D10B
33-30-05 08	HWBUN1146D10B
33-50-10 09	HWBUN1146D10B
49-60-10 05	HWBUN1146D10B
49-60-30 06	HWBUN1146D10B
49-60-30 08	HWBUN1146D10B
49-60-30 09	HWBUN1146D10B
49-60-30 11	HWBUN1146D10B
SR	
33-30-05 07	HWBUN1146D10B
49-60-30 06	HWBUN1146D10B
49-60-30 08	HWBUN1146D10B
49-60-30 09	HWBUN1146D10B
49-60-30 11	HWBUN1146D10B
73-20-10 03	HWBUN1146D10B
SR-DAJ	
24-50-01 05	CV7313
24-50-01 07	CV7313
SS-DAJ	
24-50-01 05	CV7313
24-50-01 07	CV7313
ST	
33-20-10 10	H1800C1
33-30-05 07	M12883-40-19
33-30-05 07	M400-1265
SU	
33-20-10 10	H1800C1
SU-DAJ	
26-10-10 03	CV7313
SV	
33-20-10 10	M12883-41-16
33-20-10 10	M300-1264
SW	
33-40-10 05	60-1755-1
33-40-10 06	60-3146-3
SW-DAH	
R 21-31-10 07	214C40-2-57
SW-P	
33-40-10 05	MS3106R14S6SC
33-40-10 06	MS3106R14S6SC
SX	
33-40-10 05	60-1755-1
33-40-10 06	60-3146-3
SX-P	
33-40-10 05	MS3106R14S6SC
33-40-10 06	MS3106R14S6SC

IDENT CH-SECT-UNIT-FIG	PART NUMBER
SY	
33-40-10 05	60-1755-1
33-40-10 06	60-3146-3
SY-P	
33-40-10 05	MS3106R14S6SC
33-40-10 06	MS3106R14S6SC
S1-DAL-R	
31-50-01 04	225-22811-201
31-50-01 07	225-22811-201
31-50-01 08	225-22811-201
31-50-01 09	225-22811-201
31-50-01 14	225-22811-201
S1-DE	
49-60-30 06	23AT74T2
49-60-30 08	23AT74T2
49-60-30 09	23AT74T2
49-60-30 11	23AT74T2
S1-ZKA	
49-60-30 06	WC1503
49-60-30 08	WC1503
49-60-30 09	WC1503
49-60-30 11	WC1503
S10-DAL-R	
31-50-01 04	225-22811-201
31-50-01 07	225-22811-201
31-50-01 08	225-22811-201
31-50-01 09	225-22811-201
31-50-01 14	225-22811-201
S11-DAL-R	
31-50-01 04	225-22811-201
31-50-01 07	225-22811-201
31-50-01 08	225-22811-201
31-50-01 09	225-22811-201
31-50-01 14	225-22811-201
S12	
49-60-30 06	17343-62-500
49-60-30 08	17343-62-500
49-60-30 09	17343-62-500
49-60-30 11	17343-62-500
S12-DAL-R	
31-50-01 08	225-22811-201
S13	
49-60-30 06	67100-1-32-350
49-60-30 08	67100-1-32-350
49-60-30 09	67100-1-32-350
49-60-30 11	67100-1-32-350
S2-DAL-R	
31-50-01 04	225-22811-201
31-50-01 07	225-22811-201
31-50-01 08	225-22811-201
31-50-01 09	225-22811-201

IDENT CH-SECT-UNIT-FIG	PART NUMBER
S2-DAL-R	
31-50-01 14	225-22811-201
S2-DE	
49-60-30 06	2PB732T2
49-60-30 08	2PB732T2
49-60-30 09	2PB732T2
49-60-30 11	2PB732T2
S20	
49-60-30 06	17343-62-500
49-60-30 08	17343-62-500
49-60-30 09	17343-62-500
49-60-30 11	17343-62-500
S21	
49-60-30 06	17343-62-500
49-60-30 08	17343-62-500
49-60-30 09	17343-62-500
49-60-30 11	17343-62-500
S3-DAL-R	
31-50-01 04	225-22811-201
31-50-01 07	225-22811-201
31-50-01 08	225-22811-201
31-50-01 09	225-22811-201
31-50-01 14	225-22811-201
S3-DE	
49-60-30 06	23AT73T2
49-60-30 08	23AT73T2
49-60-30 09	23AT73T2
49-60-30 11	23AT73T2
S4-DAL-R	
31-50-01 04	225-22811-201
31-50-01 07	225-22811-201
31-50-01 08	225-22811-201
31-50-01 09	225-22811-201
31-50-01 14	225-22811-201
S4-DE	
49-60-30 06	2PB732T2
49-60-30 08	2PB732T2
49-60-30 09	2PB732T2
49-60-30 11	2PB732T2
S5-DAL-R	
31-50-01 04	225-22811-201
31-50-01 07	225-22811-201
31-50-01 08	225-22811-201
31-50-01 09	225-22811-201
31-50-01 14	225-22811-201
S5-DE	
49-60-30 06	2PB717T2
49-60-30 08	2PB717T2
49-60-30 09	2PB717T2
49-60-30 11	2PB717T2
S6-DAL-R	
31-50-01 04	225-22811-201
31-50-01 07	225-22811-201
31-50-01 08	225-22811-201
31-50-01 09	225-22811-201
31-50-01 14	225-22811-201
S6-DE	
49-60-30 06	23AT73T2
49-60-30 08	23AT73T2
49-60-30 09	23AT73T2
49-60-30 11	23AT73T2
S7-DAL-R	
31-50-01 04	225-22811-201
31-50-01 07	225-22811-201
31-50-01 08	225-22811-201
31-50-01 09	225-22811-201
31-50-01 14	225-22811-201
S7-DE	
49-60-30 06	4TL1-70
49-60-30 08	4TL1-70
49-60-30 09	4TL1-70
49-60-30 11	4TL1-70
S8-DAL-R	
31-50-01 04	225-22811-201
31-50-01 07	225-22811-201
31-50-01 08	225-22811-201
31-50-01 09	225-22811-201
31-50-01 14	225-22811-201
S8-DE	
49-60-30 06	2PB732T2
49-60-30 08	2PB732T2
49-60-30 09	2PB732T2
49-60-30 11	2PB732T2
S9-DAL-R	
31-50-01 04	225-22811-201
31-50-01 07	225-22811-201
31-50-01 08	225-22811-201
31-50-01 09	225-22811-201
31-50-01 14	225-22811-201
T	
33-10-05 05	140-4538
33-10-05 07	140-4538
33-10-05 08	140-4538
33-10-05 09	140-4538
33-10-05 11	140-4538
T-CA	
27-33-00 05	HWBUN1736D6B
27-33-00 07	HWBUN1736D6B
33-10-10 31	HWBUN1736D6B
33-10-20 04	HWBUN1736D6B
33-10-20 07	HWBUN1736D6B

IDENT CH-SECT-UNIT-FIG	PART NUMBER
T-CA	
33-10-20 08	HWBUN1736D6B
T-CC	
77-10-10 02	PT08CE14-19SR
77-10-10 02	WL717RSA
T-CD	
21-31-10 07	HWBUN1736D6B
27-33-00 05	HWBUN1736D6B
27-33-00 07	HWBUN1736D6B
31-50-01 04	HWBUN1736D6B
31-50-01 07	HWBUN1736D6B
31-50-01 08	HWBUN1736D6B
31-50-01 09	HWBUN1736D6B
31-50-01 14	HWBUN1736D6B
33-10-10 31	HWBUN1736D6B
33-10-20 04	HWBUN1736D6B
33-10-20 07	HWBUN1736D6B
33-10-20 08	HWBUN1736D6B
T-DAB	
30-40-15 07	MFR4-270RPM1PCT
30-40-15 10	MFR4-270RPM1PCT
30-40-15 11	MFR4-270RPM1PCT
30-40-15 12	MFR4-270RPM1PCT
T-DAE	
33-10-05 05	BDX67A
33-10-05 07	BDX67A
33-10-05 08	BDX67A
33-10-05 09	BDX67A
33-10-05 11	BDX67A
33-10-20 04	BDX67A
33-10-20 07	BDX67A
33-10-20 08	BDX67A
33-10-05 05	HWBUN1736S10B
33-10-05 07	HWBUN1736S10B
33-10-05 08	HWBUN1736S10B
33-10-05 09	HWBUN1736S10B
33-10-05 11	HWBUN1736S10B
33-10-20 04	HWBUN1736S10B
33-10-20 07	HWBUN1736S10B
33-10-20 08	HWBUN1736S10B
33-10-05 05	25-8NF407-503A
33-10-05 07	25-8NF407-503A
33-10-05 08	25-8NF407-503A
33-10-05 09	25-8NF407-503A
33-10-05 11	25-8NF407-503A
33-10-20 04	25-8NF407-503A
33-10-20 07	25-8NF407-503A
33-10-20 08	25-8NF407-503A
33-10-05 05	5905-99-0135622
33-10-05 07	5905-99-0135622
33-10-05 08	5905-99-0135622

IDENT CH-SECT-UNIT-FIG	PART NUMBER
T-DAE	
33-10-05 09	5905-99-0135622
33-10-05 11	5905-99-0135622
33-10-20 04	5905-99-0135622
33-10-20 07	5905-99-0135622
33-10-20 08	5905-99-0135622
33-10-05 05	5905-99-0135626
33-10-05 07	5905-99-0135626
33-10-05 08	5905-99-0135626
33-10-05 09	5905-99-0135626
33-10-05 11	5905-99-0135626
33-10-20 04	5905-99-0135626
33-10-20 07	5905-99-0135626
33-10-20 08	5905-99-0135626
T-DAH	
29-32-10 05	HWBUN1736S5B
29-32-10 05	25-8NF2619-1A
T-GA	
24-50-01 05	LDA150A8
24-50-01 06	LDA150A8
24-50-01 07	LDA150A8
49-60-30 06	LDA150A8
49-60-30 08	LDA150A8
49-60-30 09	LDA150A8
49-60-30 11	LDA150A8
TA-AA	
33-10-20 04	HWBUN1146D5B
33-10-20 08	HWBUN1146D5B
TA-AB	
33-10-05 05	HWBUN1146D5B
33-10-05 07	HWBUN1146D5B
33-10-05 09	HWBUN1146D5B
33-10-05 11	HWBUN1146D5B
33-10-20 04	HWBUN1146D5B
33-10-20 08	HWBUN1146D5B
TA-DAJ	
27-33-00 07	HWBUN1736D10B
24-90-01 05	HWB1736D10B
24-90-01 06	HWB1736D10B
TA-DB	
28-41-10 02	HWBUN1736D10B
28-41-10 03	HWBUN1736D10B
28-41-20 03	HWBUN1736D10B
28-41-30 02	HWBUN1736D10B
TA1-R	
26-10-10 03	D38999-20KG39SN
TA7-P	
26-10-10 03	MS3417-14N
26-10-10 03	MS3456KT14S5P
TA7-R	
26-10-10 03	MS3417-14N

IDENT CH-SECT-UNIT-FIG	PART NUMBER
TA7-R	
26-10-10 03	MS3450KT14S5S
TB-DAJ	
27-33-00 07	HWBUN1146D10B
30-40-15 12	HWBUN1146D10B
30-40-20 05	HWBUN1146D10B
31-50-01 04	HWBUN1146D10B
31-50-01 07	HWBUN1146D10B
31-50-01 08	HWBUN1146D10B
31-50-01 09	HWBUN1146D10B
31-50-01 14	HWBUN1146D10B
30-80-10 02	HWB1146D10B
30-80-10 03	HWB1146D10B
24-90-01 05	HWB1736D10B
24-90-01 06	HWB1736D10B
TB-DAM	
49-60-10 05	HWBUN1146D10B
TB-DB	
28-41-10 02	HWBUN1736D10B
28-41-10 03	HWBUN1736D10B
28-41-20 03	HWBUN1736D10B
28-41-30 02	HWBUN1736D10B
33-30-05 07	HWBUN1736D10B
33-30-05 08	HWBUN1736D10B
TBPQ	
22-10-40 53	HWBUN1146D10B
TB1-R	
26-10-10 03	D38999-20KG39SN
26-10-10 03	G8801S21
TB1-ZKA	
49-60-30 06	MRTB20E04-111
49-60-30 08	MRTB20E04-111
49-60-30 09	MRTB20E04-111
49-60-30 11	MRTB20E04-111
TB120-5	
22-10-40 53	MRTB20E03
TB121-14	
34-30-10 53	MRTB20E09
TB121-3	
34-30-10 53	MRTB20E57
TB121-8	
34-30-10 53	MRTB20E57
TB123-18	
23-31-10 58	MRTB16E03
23-31-10 65	MRTB16E03
TB123-6	
34-30-10 53	MRTB20E57
TB123-7	
34-30-20 53	MRTB20E57
TB124-10	
22-10-40 53	MRTB16E03

IDENT CH-SECT-UNIT-FIG	PART NUMBER
TB124-19	
23-31-10 58	MRTB20E09
23-31-10 65	MRTB20E09
TB124-20	
23-31-10 58	MRTB20E09
23-31-10 65	MRTB20E09
TB124-9	
22-10-40 53	MRTB16E03
TB126-7	
34-30-10 53	MRTB20E04
TB127-17	
34-30-20 53	MRTB20E57
TB127-3	
34-30-20 53	MRTB20E57
TB127-9	
34-30-20 53	MRTB20E57
TB182	
34-30-10 53	HWBUN1736D10B
34-30-20 53	HWBUN1736D10B
TB2-ZKA	
49-60-30 06	MRTB20E04-111
49-60-30 08	MRTB20E04-111
49-60-30 09	MRTB20E04-111
49-60-30 11	MRTB20E04-111
TB3-ZKA	
49-60-30 06	MRTB20E57-111
49-60-30 08	MRTB20E57-111
49-60-30 09	MRTB20E57-111
49-60-30 11	MRTB20E57-111
TB301	
49-60-30 06	HWBUN1146S10B
49-60-30 08	HWBUN1146S10B
49-60-30 09	HWBUN1146S10B
49-60-30 11	HWBUN1146S10B
TB301-1-4	
49-60-30 06	104026-1
49-60-30 08	104026-1
49-60-30 11	104026-1
TB301A	
49-60-30 06	HWB1146S3B
49-60-30 08	HWB1146S3B
49-60-30 09	HWB1146S3B
49-60-30 11	HWB1146S3B
TB4-ZKA	
49-60-30 06	MRTB20E57-111
49-60-30 08	MRTB20E57-111
49-60-30 09	MRTB20E57-111
TB4-ZKA	
49-60-30 11	MRTB20E57-111
TB6-ZKA	
49-60-30 06	MRTB16E03-111

IDENT CH-SECT-UNIT-FIG	PART NUMBER
TB6-ZKA	
49-60-30 08	MRTB16E03-111
49-60-30 09	MRTB16E03-111
49-60-30 11	MRTB16E03-111
TB628	
23-31-20 52	HWBUN1736D10B
23-31-20 52	72444-030-0AV2
TB7-P	
26-10-10 03	MS3417-14N
26-10-10 03	MS3456KT14S5P
TB7-R	
26-10-10 03	MS3417-14N
26-10-10 03	MS3450KT14S5S
TC	
73-20-02 05	HWBUN1147S10B
34-13-01 04	HWBUN1736D10B
34-13-01 08	HWBUN1736D10B
TC-DAJ	
30-10-10 11	HWBUN1736D10B
31-20-35 02	HWBUN1736D10B
31-20-35 03	HWBUN1736D10B
30-30-20 02	HWB1736D10B
30-80-10 03	HWB1736D10B
TC1	
49-60-30 06	160021-3
49-60-30 08	160021-3
49-60-30 09	160021-3
49-60-30 11	160021-3
TC2	
49-60-30 06	160021-3
49-60-30 08	160021-3
49-60-30 09	160021-3
49-60-30 11	160021-3
TD	
49-60-30 06	MS27212-1
49-60-30 08	MS27212-1
49-60-30 09	MS27212-1
49-60-30 11	MS27212-1
TD-DAB	
21-60-10 10	25-8NF4459-27A
21-60-10 11	25-8NF4459-27A
TF	
24-21-17 03	PC250
24-21-17 04	PC250
TF-P	
24-21-17 03	MS3106R18-9S
24-21-17 04	MS3106R18-9S
TG	
73-20-01 05	2101822-1
73-20-02 05	2101822-1
TH	

IDENT CH-SECT-UNIT-FIG	PART NUMBER
TH	
31-20-35 02	S110G4-203
31-20-35 03	S110G4-203
TK	
27-24-10 02	ACA1218
27-24-10 03	ACA1218
27-24-10 02	XC5732
27-24-10 03	XC5732
TL	
27-24-10 02	ACA1218
27-24-10 03	ACA1218
27-24-10 02	XC5732
27-24-10 03	XC5732
TM	
24-21-17 04	ASH664-1PB
24-21-17 03	501-1235-01
TM	
24-21-17 04	ASH664-1PF
TM-P	
24-21-17 03	MS3108R24-2P
24-21-17 04	MS3108R24-2P
TM-R	
24-21-17 03	MS3126E8-4S
24-21-17 04	MS3126E8-4S
TN	
24-21-17 04	ASH664-1PB
24-21-17 03	501-1235-01
TN	
24-21-17 04	ASH664-1PF
TN-P	
24-21-17 03	MS3108R24-2P
24-21-17 04	MS3108R24-2P
TN-R	
24-21-17 03	MS3126E8-4S
24-21-17 04	MS3126E8-4S
TSA	
49-60-30 06	FGBA24
49-60-30 08	FGBA24
49-60-30 09	FGBA24
49-60-30 11	FGBA24
TX	
27-30-10 07	320559
27-30-10 08	320559
27-30-10 07	6020-14-19SNCO* NDD
27-30-10 08	6020-14-19SNCO* NDD
27-30-10 07	622-3260-001
27-30-10 08	622-3260-001
TZ	
73-20-01 05	2118114-1-2

IDENT CH-SECT-UNIT-FIG	PART NUMBER
TZ	
73-20-02 05	2118114-1-2
U	
33-10-20 04	140-4537
33-10-20 08	140-4538
33-10-20 07	404-8-02811-007
U-CC	
27-50-10 02	2132-01-0011
U-DAB	
30-40-15 07	MFR4-270RPM1PCT
30-40-15 10	MFR4-270RPM1PCT
30-40-15 11	MFR4-270RPM1PCT
30-40-15 12	MFR4-270RPM1PCT
U-DAE	
33-10-20 04	BDX67A
33-10-20 07	BDX67A
33-10-20 08	BDX67A
33-10-20 04	HWBUN1736S10B
33-10-20 07	HWBUN1736S10B
33-10-20 08	HWBUN1736S10B
33-10-20 04	25-8NF409-503A
33-10-20 07	25-8NF409-503A
33-10-20 08	25-8NF409-503A
33-10-20 04	5905-99-0135622
33-10-20 07	5905-99-0135622
33-10-20 08	5905-99-0135622
33-10-20 04	99-0135626
33-10-20 07	99-0135626
33-10-20 08	99-0135626
U-GA	
24-21-17 03	LDA200B18C
24-21-17 04	LDA200B18C
U-GG	
49-60-10 05	HWBUN1146D10B
U-JA	
28-41-30 02	BYW54
U-S4-DAL	
31-50-01 14	25-8NF355-29A
U-ZL	
24-50-01 05	A84MAS
24-50-01 06	A84MAS
24-50-01 07	A84MAS
49-60-30 06	A84MAS
49-60-30 08	A84MAS
49-60-30 09	A84MAS
28-21-05 02	A848MAS
28-21-05 03	A848MAS
28-21-05 04	A848MAS
49-60-10 05	A848MAS
80-10-10 04	A848MAS
U-ZL	

IDENT CH-SECT-UNIT-FIG	PART NUMBER
U-ZL	
24-50-01 06	A848MASMODA
24-50-01 07	A848MASMODA
49-60-10 05	A848MASMODA
UA	
27-24-10 02	25-7NF1815-5A
27-24-10 03	25-7NF1815-5A
UB	
27-24-10 02	25-7NF1815-5A
27-24-10 03	25-7NF1815-5A
UD	
73-20-01 05	2118002-6
UF	
28-40-20 02	HTE690014-1
UG	
28-40-20 02	HTE690014-1
UH	
31-50-05 03	MS3456L10SL4SN
31-50-05 03	057-0683-002
31-50-05 03	67121-53-068
UJ	
31-50-05 03	HTE900048
31-50-05 03	MS3417-12N
31-50-05 03	MS3476L12-10S
UK-P	
31-50-05 03	MS3417-14N
31-50-05 03	MS3476L14-19PN
UK-R	
31-50-05 03	MS3152-14
31-50-05 03	MS3470L14-19SN
UL-P	
31-50-05 03	MS3417-14N
31-50-05 03	MS3476L14-19PW
UL-R	
31-50-05 03	MS3152-14
31-50-05 03	MS3470L14-19SW
UM	
26-10-30 03	156D05-315
UP	
26-10-30 03	156D05-315
US	
21-60-10 08	MS3108R10SL4S
21-60-10 10	MS3108R10SL4S
21-60-10 11	MS3108R10SL4S
21-60-10 08	21346-5
21-60-10 10	21346-5
21-60-10 11	21346-5
US	
21-60-10 08	MS3108R10SL4S
21-60-10 10	MS3108R10SL4S
21-60-10 11	MS3108R10SL4S

IDENT CH-SECT-UNIT-FIG	PART NUMBER
US	
21-60-10 08	21346-6
21-60-10 10	21346-6
21-60-10 11	21346-6
UT	
21-60-10 08	MS3108R10SL3S
21-60-10 10	MS3108R10SL3S
21-60-10 11	MS3108R10SL3S
21-60-10 08	548408-1
21-60-10 10	548408-1
21-60-10 11	548408-1
UW-P	
28-41-10 03	MS3152-08
28-41-10 03	MS3476L08-33PN
UW-R	
28-41-10 03	MS3152-08
28-41-10 03	MS3470L08-33SN
UX-P	
28-41-10 03	MS3152-08
28-41-10 03	MS3476L08-33PN
UX-R	
28-41-10 03	MS3152-08
28-41-10 03	MS3470L08-33SN
V	
33-10-05 05	140-4538
33-10-05 07	140-4538
33-10-05 08	140-4538
33-10-05 09	140-4538
33-10-05 11	140-4538
V-CC	
77-20-10 02	WL718RSA3
V-CC-R	
77-20-10 02	MS3152-14
77-20-10 02	MS3476L14-19SW
77-20-10 02	5100-108-120
77-20-10 02	5100-108-220
V-CD	
31-50-01 04	99-630
31-50-01 07	99-630
31-50-01 08	99-630
31-50-01 09	99-630
31-50-01 14	99-630
V-DAB	
30-40-15 07	MFR5-2K4PM1PCT
30-40-15 10	MFR5-2K4PM1PCT
30-40-15 11	MFR5-2K4PM1PCT
30-40-15 12	MFR5-2K4PM1PCT
V-DAE	
33-10-05 05	BDX67A
33-10-05 07	BDX67A
33-10-05 08	BDX67A

IDENT CH-SECT-UNIT-FIG	PART NUMBER
V-DAE	
33-10-05 09	BDX67A
33-10-05 11	BDX67A
33-10-05 05	HWBUN1736S10B
33-10-05 07	HWBUN1736S10B
33-10-05 08	HWBUN1736S10B
33-10-05 09	HWBUN1736S10B
33-10-05 11	HWBUN1736S10B
33-10-05 05	25-8NF399-503A
33-10-05 07	25-8NF399-503A
33-10-05 08	25-8NF399-503A
33-10-05 09	25-8NF399-503A
33-10-05 11	25-8NF399-503A
33-10-05 05	5905-99-0135622
33-10-05 07	5905-99-0135622
33-10-05 08	5905-99-0135622
33-10-05 09	5905-99-0135622
33-10-05 11	5905-99-0135622
33-10-05 05	5905-99-0135626
33-10-05 07	5905-99-0135626
33-10-05 08	5905-99-0135626
33-10-05 09	5905-99-0135626
33-10-05 11	5905-99-0135626
V-GA	
24-50-01 05	E311TS
24-50-01 06	E311TS
24-50-01 07	E311TS
V-JA	
28-41-30 02	BYW54
V-XZ	
80-10-10 04	CV7313
VL-CG	
33-10-05 05	HWBUN1146S10B
33-10-05 07	HWBUN1146S10B
33-10-05 08	HWBUN1146S10B
33-10-05 09	HWBUN1146S10B
33-10-05 11	HWBUN1146S10B
VM	
24-50-01 05	HWBUN1146S10B
24-50-01 06	HWBUN1146S10B
24-50-01 07	HWBUN1146S10B
24-90-01 05	HWBUN1146S10B
24-90-01 06	HWBUN1146S10B
26-10-10 03	HWBUN1146S10B
26-20-10 03	HWBUN1146S10B
VM-CG	
21-60-20 03	HWBUN1146S10B
33-10-05 05	HWBUN1146S10B
33-10-05 07	HWBUN1146S10B
33-10-05 08	HWBUN1146S10B
33-10-05 09	HWBUN1146S10B

IDENT CH-SECT-UNIT-FIG	PART NUMBER
VM-CG	
33-10-05 11	HWBUN1146S10B
80-10-10 04	HWBUN1146S10B
VM2	
21-60-20 02	HWBUN1146S10B
VN	
30-40-20 03	25-8NF2067-1A
VP	
30-40-20 05	D38999-26FD05SN
30-40-20 05	GTR1054G15M
30-40-20 03	ND0075-1875
30-40-20 05	ND0075-2260
VQ	
30-40-20 03	HC921H0467-000
VR	
30-40-20 03	25-8NF2067-1A
VS	
30-40-20 05	D38999-26FD05SN
30-40-20 05	GTR1054G15M
30-40-20 03	ND0075-1875
30-40-20 05	ND0075-2260
VT	
30-40-20 03	HC921H0467-000
VU	
30-40-15 07	25-8NF2065-1A
30-40-15 10	25-8NF2065-1A
VV	
30-40-15 07	25-8NF2061-1A
30-40-15 10	25-8NF2061-1A
VW-BA	
73-20-01 05	B9021BB
VX-BA	
73-20-02 05	B9021BB
VY	
30-40-15 07	25-8NF2065-1A
30-40-15 10	25-8NF2065-1A
VZ	
30-40-15 07	25-8NF2061-1A
30-40-15 10	25-8NF2061-1A
W-CA	
33-10-20 04	702-4584
33-10-20 07	702-4584
33-10-20 08	702-4584
W-CC	
77-20-10 02	WL718RSA3
W-CC-R	
77-20-10 02	MS3152-14
77-20-10 02	MS3476L14-19SW
77-20-10 02	5100-108-120
77-20-10 02	5100-108-220
W-DAE	

IDENT CH-SECT-UNIT-FIG	PART NUMBER
W-DAE	
33-10-05 05	BDX67A
33-10-05 07	BDX67A
33-10-05 08	BDX67A
33-10-05 09	BDX67A
33-10-05 11	BDX67A
33-10-05 05	HWBUN1736S10B
33-10-05 07	HWBUN1736S10B
33-10-05 08	HWBUN1736S10B
33-10-05 09	HWBUN1736S10B
33-10-05 11	HWBUN1736S10B
33-10-05 05	25-8NF403-503A
33-10-05 07	25-8NF403-503A
33-10-05 08	25-8NF403-503A
33-10-05 09	25-8NF403-503A
33-10-05 11	25-8NF403-503A
33-10-05 05	5905-99-0135622
33-10-05 07	5905-99-0135622
33-10-05 08	5905-99-0135622
33-10-05 09	5905-99-0135622
33-10-05 11	5905-99-0135622
33-10-05 05	5905-99-0135626
33-10-05 07	5905-99-0135626
33-10-05 08	5905-99-0135626
33-10-05 09	5905-99-0135626
33-10-05 11	5905-99-0135626
W-GA	
24-50-01 05	CV7313
24-50-01 06	CV7313
24-50-01 07	CV7313
80-10-10 04	CV7313
W-XZ	
80-10-10 04	CV7313
WC-BA	
28-42-10 02	1HSN66
WG	
30-40-15 11	D38999-26FD05SN
30-40-15 11	GTR1054G15M
30-40-15 07	ND0075-1875
30-40-15 10	ND0075-1875
30-40-15 12	ND0075-1875
30-40-15 11	ND0075-2260
WG	
30-40-15 12	D38999-26FD05SN
30-40-15 12	GTR1054G15M
30-40-15 12	ND0075-2260
WH	
30-40-15 11	D38999-26FD05SN
30-40-15 11	GTR1054G15M
30-40-15 07	ND0075-1875
30-40-15 10	ND0075-1875

IDENT CH-SECT-UNIT-FIG	PART NUMBER
WH	
30-40-15 12	ND0075-1875
30-40-15 11	ND0075-2260
WH	
30-40-15 12	D38999-26FD05SN
30-40-15 12	GTR1054G15M
30-40-15 12	ND0075-2260
WJ	
31-20-35 02	2D1
31-20-35 03	2D1
WK	
33-10-05 05	1TP1-3
33-10-05 07	1TP1-3
33-10-05 08	1TP1-3
33-10-05 09	1TP1-3
33-10-05 11	1TP1-3
WL	
33-10-05 05	M2641
33-10-05 07	M2641
33-10-05 08	M2641
33-10-05 09	M2641
33-10-05 11	M2641
WM	
31-20-35 02	9M60-01-2-3N
WN-CB	
27-24-10 03	2TL1-3
WN-CB-BA	
27-24-10 02	2TL1-3
WP	
31-20-35 02	2141-01-0014
31-20-35 03	2141-01-0014
WQ	
31-20-35 02	HWBUN1736D10B
31-20-35 03	HWBUN1736D10B
WQ-BA	
27-24-10 02	HWBUN1736D10B
27-24-10 03	HWBUN1736D10B
32-60-10 04	HWBUN1736D10B
33-10-05 05	HWBUN1736D10B
33-10-05 07	HWBUN1736D10B
33-10-05 08	HWBUN1736D10B
33-10-05 09	HWBUN1736D10B
33-10-05 11	HWBUN1736D10B
78-30-05 01	HWBUN1736D10B
78-30-05 02	HWBUN1736D10B
WR	
32-60-30 02	BYX36-600
32-60-30 03	BYX36-600
32-60-30 02	25-6NF1387A
32-60-30 03	25-6NF1387A
WU-CB	

IDENT CH-SECT-UNIT-FIG	PART NUMBER
WU-CB	
27-24-10 03	2TL1-3
WU-CB-BA	
27-24-10 02	2TL1-3
W192	
22-10-40 53	25-8NF3531
X	
33-10-05 05	140-4538
33-10-05 07	140-4538
33-10-05 08	140-4538
33-10-05 09	140-4538
33-10-05 11	140-4538
X-CA	
33-10-20 04	702-4584
33-10-20 07	702-4584
33-10-20 08	702-4584
X-CC	
27-61-10 03	6333-014-01A4
27-61-10 04	6333-014-01A4
27-61-10 08	6333-014-01A4
X-DAE	
33-10-05 05	BDX67A
33-10-05 07	BDX67A
33-10-05 08	BDX67A
33-10-05 09	BDX67A
33-10-05 11	BDX67A
33-10-05 05	HWBUN1736S10B
33-10-05 07	HWBUN1736S10B
33-10-05 08	HWBUN1736S10B
33-10-05 09	HWBUN1736S10B
33-10-05 11	HWBUN1736S10B
33-10-05 05	25-8NF401-503A
33-10-05 07	25-8NF401-503A
33-10-05 08	25-8NF401-503A
33-10-05 09	25-8NF401-503A
33-10-05 11	25-8NF401-503A
33-10-05 05	5905-99-0135622
33-10-05 07	5905-99-0135622
33-10-05 08	5905-99-0135622
33-10-05 09	5905-99-0135622
33-10-05 11	5905-99-0135622
33-10-05 05	5905-99-0135626
33-10-05 07	5905-99-0135626
33-10-05 08	5905-99-0135626
33-10-05 09	5905-99-0135626
33-10-05 11	5905-99-0135626
X-GA	
49-60-10 05	MR1376
49-60-10 05	WBUN1502
XA	
27-24-10 02	HWBUN1146D5B

IDENT CH-SECT-UNIT-FIG	PART NUMBER
XA	
27-24-10 03	HWBUN1146D5B
78-30-05 01	HWBUN1146D5B
78-30-05 02	HWBUN1146D5B
XC	
27-33-00 05	HWBUN1146S5B
27-33-00 07	HWBUN1146S5B
XE	
24-53-10 06	HWBUN1736S5B
24-53-10 08	HWBUN1736S5B
XN	
21-60-10 08	B01A2-14128A
21-60-10 10	B01A2-14128A
21-60-10 11	B01A2-14128A
21-60-10 08	MS3126F8-3S
21-60-10 10	MS3126F8-3S
21-60-10 11	MS3126F8-3S
XN	
21-60-10 10	MAP900-001
21-60-10 11	MAP900-001
21-60-10 10	MS3126F8-3S
21-60-10 11	MS3126F8-3S
XP	
21-60-10 08	B01A2-14128A
21-60-10 10	B01A2-14128A
21-60-10 11	B01A2-14128A
21-60-10 08	MS3126F8-3S
21-60-10 10	MS3126F8-3S
21-60-10 11	MS3126F8-3S
XP	
21-60-10 10	MAP900-001
21-60-10 11	MAP900-001
21-60-10 10	MS3126F8-3S
21-60-10 11	MS3126F8-3S
XQ	
21-60-10 08	HE690011
21-60-10 10	HE690011
21-60-10 11	HE690011
21-60-10 08	M83723-13R08-3*
	3N
21-60-10 10	M83723-13R08-3*
	3N
21-60-10 11	M83723-13R08-3*
	3N
XR	
21-60-10 08	HE690011
21-60-10 10	HE690011
21-60-10 11	HE690011
21-60-10 08	M83723-13R08-3*
	3N
21-60-10 10	M83723-13R08-3*

IDENT CH-SECT-UNIT-FIG	PART NUMBER
	3N
21-60-10 11	M83723-13R08-3*
	3N
XS	
32-60-10 04	1HSN64
XS1	
24-53-10 06	HWBUN1736S5B
24-53-10 08	HWBUN1736S5B
XS2	
24-53-10 06	HWBUN1736S5B
24-53-10 08	HWBUN1736S5B
XT	
32-60-10 04	1HSN64
X1-DAB	
27-33-00 05	MRTB20E57-111
27-33-00 07	MRTB20E57-111
X10-DAB	
33-30-15 07	MRRB20E04-111
24-90-01 05	MRTB20E04-111
24-90-01 06	MRTB20E04-111
30-10-10 11	MRTB20E04-111
34-13-01 04	MRTB20E04-111
34-13-01 08	MRTB20E04-111
X11-DAB	
24-90-01 05	MRTB20E04-111
24-90-01 06	MRTB20E04-111
27-61-10 03	MRTB20E04-111
27-61-10 04	MRTB20E04-111
27-61-10 08	MRTB20E04-111
32-60-30 02	MRTB20E04-111
32-60-30 03	MRTB20E04-111
R 32-60-10 04	M81714-2DA1
X12-DAB	
24-90-01 05	MRTB20E04-111
24-90-01 06	MRTB20E04-111
R 32-60-10 04	M81714-2DA1
X12-DAB	
R 30-40-15 07	M81714-2DA1
R 30-40-15 10	M81714-2DA1
R 30-40-15 11	M81714-2DA1
R 30-40-15 12	M81714-2DA1
R 30-40-20 03	M81714-2DA1
R 30-40-20 05	M81714-2DA1
X13-DAB	
24-30-10 02	MRTB20E04-111
24-30-20 02	MRTB20E04-111
24-30-20 03	MRTB20E04-111
24-50-01 05	MRTB20E04-111
24-50-01 06	MRTB20E04-111
24-50-01 07	MRTB20E04-111
24-90-01 05	MRTB20E04-111

IDENT CH-SECT-UNIT-FIG	PART NUMBER
X13-DAB	
24-90-01 06	MRTB20E04-111
X14-DAB	
24-30-10 02	MRTB20E04-111
24-30-20 02	MRTB20E04-111
24-90-01 05	MRTB20E04-111
24-90-01 06	MRTB20E04-111
27-33-00 05	MRTB20E04-111
27-33-00 07	MRTB20E04-111
X15-DAB	
24-90-01 05	MRTB20E04-111
24-90-01 06	MRTB20E04-111
27-33-00 05	MRTB20E04-111
27-33-00 07	MRTB20E04-111
27-61-10 08	MRTB20E04-111
X16-DAB	
24-50-01 05	MRTB20E57-111
24-50-01 06	MRTB20E57-111
24-50-01 07	MRTB20E57-111
X180P1	
22-10-40 53	634-1388-001
X180P2	
22-10-40 53	634-1388-001
X2-DAB	
27-33-00 05	MRTB20E04-111
27-33-00 07	MRTB20E04-111
X209P1	
34-30-10 53	335-0074-000
34-30-10 53	653-1248-001
34-30-10 53	653-1258-001
X209P2	
34-30-10 53	335-0074-000
34-30-10 53	653-1248-001
34-30-10 53	653-1258-001
X244P1	
34-30-20 53	335-0074-000
34-30-20 53	653-1284-001
34-30-20 53	653-1285-001
X244P2	
34-30-20 53	335-0074-000
34-30-20 53	653-1284-001
34-30-20 53	653-1285-001
X3-DAB	
24-50-01 05	MRTB20E57-111
24-50-01 06	MRTB20E57-111
24-50-01 07	MRTB20E57-111
X4-DAB	
21-60-10 08	MRTB20E57-111
21-60-10 10	MRTB20E57-111
21-60-10 11	MRTB20E57-111
24-50-01 05	MRTB20E57-111

IDENT CH-SECT-UNIT-FIG	PART NUMBER
X4-DAB	
24-50-01 06	MRTB20E57-111
24-50-01 07	MRTB20E57-111
27-33-00 05	MRTB20E57-111
27-33-00 07	MRTB20E57-111
32-60-30 02	MRTB20E57-111
32-60-30 03	MRTB20E57-111
X5-DAB	
32-60-10 04	MRTB20E57-111
X6-DAB	
78-30-05 01	MRTB20E057-111
78-30-05 02	MRTB20E057-111
27-61-20 04	MRTB20E57-111
32-60-10 04	MRTB20E57-111
32-60-30 02	MRTB20E57-111
32-60-30 03	MRTB20E57-111
34-13-01 04	MRTB20E57-111
34-13-01 08	MRTB20E57-111
X7-DAB	
32-60-10 04	MRTB20E57-111
34-13-01 04	MRTB20E57-111
34-13-01 08	MRTB20E57-111
X8-DAB	
24-21-17 03	MRTB20E04-111
24-21-17 04	MRTB20E04-111
24-90-01 05	MRTB20E04-111
24-90-01 06	MRTB20E04-111
X9-DAB	
R 32-60-10 04	M81714-2DB1
Y	
31-50-01 04	HWBUN1736D10B
31-50-01 07	HWBUN1736D10B
31-50-01 08	HWBUN1736D10B
31-50-01 09	HWBUN1736D10B
31-50-01 14	HWBUN1736D10B
33-10-05 05	512TS1-1
33-10-05 07	512TS1-1
33-10-05 08	512TS1-1
33-10-05 09	512TS1-1
33-10-05 11	512TS1-1
Y-CC	
27-61-10 03	HWBUN1736D10B
27-61-10 04	HWBUN1736D10B
28-40-10 04	HWBUN1736D10B
28-40-10 05	HWBUN1736D10B
28-41-10 02	HWBUN1736D10B
28-41-10 03	HWBUN1736D10B
31-20-60 02	HWBUN1736D10B
31-50-05 03	HWBUN1736D10B
32-60-10 04	HWBUN1736D10B
33-10-20 04	HWBUN1736D10B

IDENT CH-SECT-UNIT-FIG	PART NUMBER
Y-CC	
33-10-20 07	HWBUN1736D10B
33-10-20 08	HWBUN1736D10B
73-20-02 05	HWBUN1736D10B
Y-DAE	
33-10-20 04	BDX66A
33-10-20 07	BDX66A
33-10-20 08	BDX66A
33-10-20 04	BDX67A
33-10-20 07	BDX67A
33-10-20 08	BDX67A
33-10-20 04	HWBUN1736S10B
33-10-20 07	HWBUN1736S10B
33-10-20 08	HWBUN1736S10B
33-10-20 04	25-8NF397-503A
33-10-20 07	25-8NF397-503A
33-10-20 08	25-8NF397-503A
33-10-20 04	5905-99-0135626
33-10-20 04	5905-99-0135626
33-10-20 07	5905-99-0135626
33-10-20 08	5905-99-0135626
33-10-20 08	5905-99-0135626
33-10-20 04	5905-99-0135638
33-10-20 07	5905-99-0135638
33-10-20 08	5905-99-0135638
33-10-20 04	5905-99-0135647
33-10-20 07	5905-99-0135647
33-10-20 08	5905-99-0135647
33-10-20 04	5905-99-0135666
33-10-20 04	5905-99-0135666
33-10-20 07	5905-99-0135666
33-10-20 07	5905-99-0135666
33-10-20 08	5905-99-0135666
33-10-20 08	5905-99-0135666
33-10-20 07	5909-99-0135626
Y-DAG	
30-40-15 12	MFR5-2K2PM2PCT
Y-ZKA	
49-60-10 05	MS3108R24-28SF* 80
49-60-10 05	51509-006C
Y-ZKA	
49-60-10 05	MS3108R24-28SF* 80
49-60-10 05	51539-006H
YH	
21-60-20 02	CA3106R12SF80
21-60-20 03	CA3106R12SF80
21-60-20 02	S110G50-1957
21-60-20 03	S110G50-1957
YL	

IDENT CH-SECT-UNIT-FIG	PART NUMBER
YL	
21-30-10 02	MS24266R128-3S
21-30-10 04	MS24266R128-3S
21-30-10 02	132322-2-1
21-30-10 04	132322-2-1
YL	
21-30-10 04	MS24266R128-3S
21-30-10 04	132322-3-1
YY	
21-20-10 03	45C3111
YY	
21-20-10 03	25-8NF4497-1
21-20-10 03	45C3111
Y1-DAB	
21-60-10 10	MRTB20E04-111
21-60-10 11	MRTB20E04-111
24-90-01 05	MRTB20E04-111
24-90-01 06	MRTB20E04-111
Y1-DAB	
R 30-40-15 07	M81714-2DA1
R 30-40-15 10	M81714-2DA1
R 30-40-15 11	M81714-2DA1
R 30-40-15 12	M81714-2DA1
R 30-40-20 03	M81714-2DA1
R 30-40-20 05	M81714-2DA1
Y10-DAB	
27-33-00 05	MRTB20E03-784
27-33-00 07	MRTB20E03-784
Y11-DAB	
27-33-00 05	MRTB20E03-784
27-33-00 07	MRTB20E03-784
Y12-DAB	
21-30-10 02	MRTB20E57-111
21-30-10 04	MRTB20E57-111
21-60-10 08	MRTB20E57-111
21-60-10 10	MRTB20E57-111
21-60-10 11	MRTB20E57-111
30-10-10 11	MRTB20E57-111
32-60-30 02	MRTB20E57-111
32-60-30 03	MRTB20E57-111
73-20-10 03	MRTB20E57-111
Y13-DAB	
21-60-10 08	MRTB20E57-111
21-60-10 10	MRTB20E57-111
21-60-10 11	MRTB20E57-111
32-60-10 04	MRTB20E57-111
Y14-DAB	
24-50-01 05	MRTB20E57-111
24-50-01 06	MRTB20E57-111
24-50-01 07	MRTB20E57-111
32-60-10 04	MRTB20E57-111

	IDENT CH-SECT-UNIT-FIG	PART NUMBER
	Y14-DAB	
	32-60-30 02	MRTB20E57-111
	32-60-30 03	MRTB20E57-111
	Y14-DAB	
R	30-40-15 07	M81714-2DA1
R	30-40-15 10	M81714-2DA1
R	30-40-15 11	M81714-2DA1
R	30-40-15 12	M81714-2DA1
	Y15-DAB	
	78-30-05 01	MRTB20E057-111
	78-30-05 02	MRTB20E057-111
	27-61-10 04	MRTB20E57-111
	27-61-10 08	MRTB20E57-111
	32-60-10 04	MRTB20E57-111
	Y16-DAB	
	27-33-00 05	MRTB16E03-111
	27-33-00 07	MRTB16E03-111
	Y2-DAB	
	24-90-01 05	MRTB20E04-111
	24-90-01 06	MRTB20E04-111
	28-41-10 03	MRTB20E04-111
	33-10-05 05	MRTB20E04-111
	33-10-05 07	MRTB20E04-111
	33-10-05 08	MRTB20E04-111
	33-10-05 09	MRTB20E04-111
	33-10-05 11	MRTB20E04-111
	33-10-20 04	MRTB20E04-111
	33-10-20 07	MRTB20E04-111
	33-10-20 08	MRTB20E04-111
	73-20-10 03	MRTB20E04-111
	Y3-DAB	
	24-90-01 05	MRTB20E04-111
	24-90-01 06	MRTB20E04-111
	26-10-10 03	MRTB20E04-111
	30-10-10 11	MRTB20E04-111
	30-30-10 02	MRTB20E04-111
	30-30-31 02	MRTB20E04-111
	Y3-DAJ	
	30-30-20 02	MRTB20E04-111
	Y4-DAB	
	21-60-10 08	MRTB20E04-111
	21-60-10 10	MRTB20E04-111
	21-60-10 11	MRTB20E04-111
	24-90-01 05	MRTB20E04-111
	24-90-01 06	MRTB20E04-111
	Y5-DAB	
	24-90-01 05	MRTB16E04-111
	24-90-01 06	MRTB16E04-111
	30-30-31 02	MRTB16E04-111
	Y6-DAB	
	21-60-10 10	MRTB20E04-111

	IDENT CH-SECT-UNIT-FIG	PART NUMBER
	Y6-DAB	
	21-60-10 11	MRTB20E04-111
	27-61-20 04	MRTB20E04-111
	28-41-20 03	MRTB20E04-111
	32-60-30 02	MRTB20E04-111
	32-60-30 03	MRTB20E04-111
	Y7-DAB	
	32-60-10 04	MRTB20E03-784
	Y8-DAB	
R	32-60-10 04	591818-1
	Y9-DAB	
	32-60-10 04	MRTB20E03-784
	73-20-10 03	MRTB20E03-784
	Z	
	33-10-05 05	512TS1-1
	33-10-05 07	512TS1-1
	33-10-05 08	512TS1-1
	33-10-05 09	512TS1-1
	33-10-05 11	512TS1-1
	Z-CA	
	27-33-00 05	BYW54
	27-33-00 05	BYW54
	27-33-00 05	BYW54
	27-33-00 05	BYW54
	27-33-00 05	BYW54
	27-33-00 05	BYW54
	27-33-00 05	BYW54
	27-33-00 05	BYW54
	27-33-00 05	BYW54
	27-33-00 05	BYW54
	27-33-00 05	BYW54
	27-33-00 05	BYW54
	27-33-00 05	BYW54
	27-33-00 05	BYW54
	27-33-00 07	BYW54
	27-33-00 07	BYW54
	27-33-00 07	BYW54
	27-33-00 07	BYW54
	27-33-00 07	BYW54
	27-33-00 07	BYW54
	27-33-00 07	BYW54
	27-33-00 07	BYW54
	27-33-00 07	BYW54
	27-33-00 07	BYW54
	27-33-00 07	BYW54
	27-33-00 07	BYW54
	27-33-00 07	BYW54
	27-33-00 05	25-8NF3685-1A
	27-33-00 07	25-8NF3685-1A
	Z-CC	
	77-10-10 02	PT08CE14-19SR
	77-10-10 02	WL656RSA

IDENT CH-SECT-UNIT-FIG	PART NUMBER
Z-CD	
27-33-00 05	BYW54
27-33-00 05	BYW54
27-33-00 05	BYW54
27-33-00 05	BYW54
27-33-00 05	BYW54
27-33-00 05	BYW54
27-33-00 05	BYW54
27-33-00 07	BYW54
27-33-00 07	BYW54
27-33-00 07	BYW54
27-33-00 07	BYW54
27-33-00 07	BYW54
27-33-00 07	BYW54
27-33-00 07	BYW54
27-33-00 05	25-8NF3685-1A
27-33-00 07	25-8NF3685-1A
Z-DAE	
31-50-01 04	HWBUN1736S10B
31-50-01 07	HWBUN1736S10B
31-50-01 08	HWBUN1736S10B
31-50-01 09	HWBUN1736S10B
31-50-01 14	HWBUN1736S10B
31-50-01 04	MJE2955
31-50-01 07	MJE2955
31-50-01 08	MJE2955
31-50-01 09	MJE2955
31-50-01 14	MJE2955
31-50-01 04	25-8NF205-503A
31-50-01 07	25-8NF205-503A
31-50-01 08	25-8NF205-503A
31-50-01 09	25-8NF205-503A
31-50-01 14	25-8NF205-503A
Z-DAG	
30-40-15 12	MFR5-2K2PM2PCT
Z-ZK	
49-60-10 05	CV7313
80-10-10 04	CV7313
49-60-10 05	WBUN1502
ZM	
31-20-35 02	KPTM08F10-6S63
31-20-35 02	23491
24-50-01 05	23491-3
24-50-01 05	23491-3
24-50-01 06	9750-0640
24-50-01 07	9750-0640
ZN	
31-20-35 02	KPTM08F10-6S63
31-20-35 02	23491
24-50-01 05	23491-3
24-50-01 05	23491-3

IDENT CH-SECT-UNIT-FIG	PART NUMBER
ZN	
24-50-01 06	9750-0640
24-50-01 07	9750-0640
ZP	
24-50-01 05	GCB3LV14GB183
24-50-01 06	GCB3LV14GB183
24-50-01 07	GCB3LV14GB183
ZU	
32-60-10 04	1HSN64
ZY	
32-60-10 04	1HSN64
Z1	
49-60-30 06	161043-700
49-60-30 08	161043-700
49-60-30 09	161043-700
Z1	
49-60-30 06	161043-701
49-60-30 08	161043-701
49-60-30 09	161043-701
Z1	
49-60-30 11	164540-700
Z2	
49-60-30 06	51509-006C
49-60-30 08	51509-006C
49-60-30 09	51509-006C
49-60-30 11	51509-006C
Z2	
49-60-30 06	51539-006H
49-60-30 08	51539-006H
49-60-30 09	51539-006H
49-60-30 11	51539-006H
Z3	
49-60-30 06	30402104
49-60-30 08	30402104
49-60-30 09	30402104
49-60-30 11	30402104
Z4	
49-60-30 06	160290-100
49-60-30 08	160290-100
49-60-30 09	160290-100
49-60-30 11	160290-100
Z5	
49-60-30 06	160240-400
49-60-30 08	160240-400
49-60-30 09	160240-400
49-60-30 11	160240-400
1-AB-DE	
49-60-30 06	BYW54
49-60-30 08	BYW54
49-60-30 09	BYW54
49-60-30 11	BYW54

IDENT CH-SECT-UNIT-FIG	PART NUMBER
1-BB-ZK	
49-60-30 06	25-7NF1815-5A
1-BC-DE	
49-60-30 06	BYW54
49-60-30 08	BYW54
49-60-30 09	BYW54
49-60-30 11	BYW54
1-LH	
28-40-10 04	0207KTU1
28-40-10 05	0207KTU1
1-RH	
28-40-10 04	0207KTU1
28-40-10 05	0207KTU1
1GN-BA	
49-60-30 09	MS3455L10SL3S
105-LH	
28-21-05 02	2070C01
28-21-05 03	2070C01
105-LH	
28-21-05 02	2070C11
28-21-05 03	2070C11
105-LH	
28-21-05 02	(SB28-88-3256A
28-21-05 03	(SB28-88-3256A
28-21-05 02	2C40-2
28-21-05 03	2C40-2
28-21-05 04	2C40-2
105-RH	
28-21-05 02	2070C01
28-21-05 03	2070C01
105-RH	
28-21-05 02	2070C11
28-21-05 03	2070C11
105-RH	
28-21-05 02	(SB28-88-3256A
28-21-05 03	(SB28-88-3256A
28-21-05 02	2C40-2
28-21-05 03	2C40-2
28-21-05 04	2C40-2
1926-M1	
28-40-30 05	19-127-55
1926-M2	
28-40-30 05	19-127-55
2-AB-DE	
49-60-30 06	BYW54
49-60-30 08	BYW54
49-60-30 09	BYW54
49-60-30 11	BYW54
2-BC-DE	
49-60-30 06	BYW54
49-60-30 08	BYW54

IDENT CH-SECT-UNIT-FIG	PART NUMBER
2-BC-DE	
49-60-30 09	BYW54
49-60-30 11	BYW54
2-LH	
28-40-10 04	0204KTU2
28-40-10 05	0204KTU2
2-RH	
28-40-10 04	0204KTU2
28-40-10 05	0204KTU2
3-AB-DE	
49-60-30 06	BYW54
49-60-30 08	BYW54
49-60-30 09	BYW54
49-60-30 11	BYW54
3-BC-DE	
49-60-30 06	BYW54
49-60-30 08	BYW54
49-60-30 09	BYW54
49-60-30 11	BYW54
3-LH	
28-40-10 04	0207KTU3
28-40-10 05	0207KTU3
3-RH	
28-40-10 04	0207KTU3
28-40-10 05	0207KTU3
4-AB-DE	
49-60-30 06	BYW54
49-60-30 08	BYW54
49-60-30 09	BYW54
49-60-30 11	BYW54
4-BC-DE	
49-60-30 06	BYW54
49-60-30 08	BYW54
49-60-30 09	BYW54
49-60-30 11	BYW54
4-LH	
28-40-10 04	0204KTU4
28-40-10 05	0204KTU4
4-RH	
28-40-10 04	0204KTU4
28-40-10 05	0204KTU4
5-AB-DE	
49-60-30 06	BYW54
49-60-30 08	BYW54
49-60-30 09	BYW54
49-60-30 11	BYW54
5-BC-DE	
49-60-30 06	BYW54
49-60-30 08	BYW54
49-60-30 09	BYW54
49-60-30 11	BYW54

IDENT CH-SECT-UNIT-FIG	PART NUMBER
5-LH	
28-40-10 04	0204KTU5
28-40-10 05	0204KTU5
5-RH	
28-40-10 04	0204KTU5
28-40-10 05	0204KTU5
6-AB-DE	
49-60-30 06	BYW54
49-60-30 08	BYW54
49-60-30 09	BYW54
49-60-30 11	BYW54
6-LH	
28-40-10 04	0204KTU6
28-40-10 05	0204KTU6
6-RH	
28-40-10 04	0204KTU6
28-40-10 05	0204KTU6
7-LH	
28-40-10 04	0204KTU7
28-40-10 05	0204KTU7
7-RH	
28-40-10 04	0204KTU7
28-40-10 05	0204KTU7

IDENT CH-SECT-UNIT-FIG	PART NUMBER

PART NUMBER INDEX

(ALPHA)

PART NUMBER CH-SECT-UNIT-FIG-ITEM	IDENT
(OPT	
28-41-30 02	GF-DB
(SB28-88-3256A	
28-21-05 02	105-LH
28-21-05 02	105-RH
28-21-05 03	105-LH
28-21-05 03	105-RH
ACA1218	
27-24-10 02	TK
27-24-10 02	TL
27-24-10 03	TK
27-24-10 03	TL
AE4559MK1	
21-20-10 03	FV
AN3106E10SL3S	
33-40-10 05	JL-P
33-40-10 06	JL-P
AN3108E10SL3S	
33-40-10 05	HA-R
33-40-10 06	HA-R
ASH664-1PB	
24-21-17 04	TM
24-21-17 04	TN
ASH664-1PF	
24-21-17 04	TM
24-21-17 04	TN
AS2294-2	
21-31-10 07	EC-DAJ
21-31-10 07	ED-DAJ
21-31-10 07	EE-DAJ
AS2294-4	
21-31-10 07	EC-DAJ
21-31-10 07	ED-DAJ
21-31-10 07	EE-DAJ
A1003	
26-20-10 03	PK-CG
26-20-10 03	PN-CG
A4896A7-24	
33-10-05 05	RT-BA
33-10-05 07	RT-BA
33-10-05 08	RT-BA
33-10-05 09	RT-BA
33-10-05 11	RT-BA
A656	
26-20-10 03	PK-CG
26-20-10 03	PN-CG
A6795C	
33-10-05 05	CZ-BA
33-10-05 05	RK-BA
33-10-05 05	RU-BA
33-10-05 07	CZ-BA

PART NUMBER CH-SECT-UNIT-FIG-ITEM	IDENT
A6795C	
33-10-05 07	RK-BA
33-10-05 07	RU-BA
33-10-05 08	CZ-BA
33-10-05 08	RK-BA
33-10-05 08	RU-BA
33-10-05 09	CZ-BA
33-10-05 09	RK-BA
33-10-05 09	RU-BA
33-10-05 11	CZ-BA
33-10-05 11	RK-BA
33-10-05 11	RU-BA
A703FSS	
24-30-10 02	G-GA
24-30-20 02	D-GA
24-30-20 03	D-GA
49-60-10 05	A-GA
49-60-10 05	D-GA
49-60-30 06	D-GA
49-60-30 06	K11-ZKA
49-60-30 08	D-GA
49-60-30 08	K11-ZKA
49-60-30 08	K12-ZKA
49-60-30 09	D-GA
49-60-30 09	G-GA
49-60-30 09	K11-ZKA
49-60-30 11	D-GA
49-60-30 11	K11-ZKA
80-10-10 04	D-GA
80-10-10 04	G-GA
A703GS	
49-60-30 06	K12-ZKA
49-60-30 08	K12-ZKA
49-60-30 09	K12-ZKA
49-60-30 11	K12-ZKA
A703ZS	
24-30-10 02	H-GA
24-30-20 02	C-GA
24-30-20 03	C-GA
24-50-01 05	C-GA
24-50-01 05	H-GA
24-50-01 06	C-GA
24-50-01 06	H-GA
24-50-01 07	C-GA
24-50-01 07	H-GA
49-60-10 05	J-GA
49-60-30 06	C-GA
49-60-30 08	C-GA
49-60-30 09	C-GA
49-60-30 11	C-GA
A770RSSA	

PART NUMBER CH-SECT-UNIT-FIG-ITEM	IDENT
A770RSSA	
24-50-01 05	J-ZL
24-50-01 05	K-ZL
24-50-01 06	J-ZL
24-50-01 06	K-ZL
24-50-01 07	J-ZL
24-50-01 07	K-ZL
80-10-10 04	J-ZL
80-10-10 04	K-ZL
A8-7M100-3	
33-40-10 06	
A84MAS	
24-50-01 05	U-ZL
24-50-01 06	U-ZL
24-50-01 07	U-ZL
49-60-30 06	U-ZL
49-60-30 08	U-ZL
49-60-30 09	U-ZL
A848MAS	
28-21-05 02	U-ZL
28-21-05 03	U-ZL
28-21-05 04	U-ZL
49-60-10 05	U-ZL
80-10-10 04	U-ZL
A848MASMODA	
24-50-01 06	U-ZL
24-50-01 07	U-ZL
49-60-10 05	U-ZL
A8970C1	
33-10-10 31	ACL-CA
33-10-10 31	ACL-CD
33-10-10 31	ADL-CA
33-10-10 31	ADL-CD
33-10-10 31	AEL-CA
33-10-10 31	AEL-CD
33-10-10 31	AJL-CD
33-10-10 31	AML-CD
33-10-10 31	AQL-CD
A8970C2	
33-10-10 31	ALL-CD
33-10-10 31	ANL-CD
33-10-10 31	APL-CD
A8975C2	
33-10-10 31	AKL-CD
BAEFER000004075	
28-21-05 02	P2-JA-P
BAEREF000003102	
29-32-10 05	QN-R
BAEREF000003118	
33-10-10 31	CA2-R
BAEREF000003120	

PART NUMBER CH-SECT-UNIT-FIG-ITEM	IDENT
BAEREF000003120	
33-10-10 31	CA1-R
33-10-20 04	CA1-R
33-10-20 07	CA1-R
33-10-20 08	CA1-R
BAEREF000003123	
21-20-10 03	CC1-R
29-32-10 05	CC1-R
30-20-10 02	CC3-P
31-20-60 02	CC1-R
31-50-01 04	CC1-P
31-50-01 04	CC3-P
31-50-01 07	CC1-P
31-50-01 07	CC3-P
31-50-01 08	CC1-P
31-50-01 08	CC3-P
31-50-01 09	CC1-P
31-50-01 09	CC3-P
31-50-01 14	CC1-P
31-50-01 14	CC3-P
33-10-05 05	CC1-P
33-10-05 07	CC1-P
33-10-05 08	CC1-P
33-10-05 09	CC1-P
33-10-05 11	CC1-P
BAEREF000003124	
27-61-10 03	CC2-P
27-61-10 04	CC2-R
27-61-10 08	CC2-R
28-41-10 02	CC2-R
28-41-10 03	CC2-R
73-20-02 05	CC2-P
BAEREF000003143	
21-31-10 07	CD1-R
31-50-01 04	CD1-R
31-50-01 07	CD1-R
31-50-01 08	CD1-R
31-50-01 09	CD1-R
31-50-01 14	CD1-R
33-10-10 31	CC4-R
33-10-10 31	CD1-R
BAEREF000003145	
21-31-10 07	CD1-P
31-50-01 04	CD1-P
31-50-01 07	CD1-P
31-50-01 08	CD1-P
31-50-01 09	CD1-P
31-50-01 14	CD1-P
33-10-10 31	CC4-P
33-10-10 31	CD1-P
BAEREF000003187	

PART NUMBER CH-SECT-UNIT-FIG-ITEM	IDENT
BAEREF000003187	
23-31-10 58	J629
23-31-10 65	J629
33-20-10 10	AC-P
BAEREF000003205	
27-24-10 02	BA1-P
27-24-10 03	BA1-R
31-20-35 02	BA1-R
31-20-35 03	BA1-P
33-10-05 05	BA1-P
33-10-05 07	BA1-P
33-10-05 08	BA1-P
33-10-05 09	BA1-P
33-10-05 11	BA1-P
BAEREF000003234	
24-50-01 05	A-ZL
24-50-01 05	C-ZL
24-50-01 05	D-ZL
24-50-01 05	E-ZL
24-50-01 06	A-ZL
24-50-01 06	C-ZL
24-50-01 06	D-ZL
24-50-01 06	E-ZL
24-50-01 07	A-ZL
24-50-01 07	C-ZL
24-50-01 07	D-ZL
24-50-01 07	E-ZL
BAEREF000003282	
33-10-20 04	CD1-R
33-10-20 07	CD1-R
33-10-20 08	CD1-R
BAEREF000003294	
32-60-10 04	ND-R
BAEREF000003400	
34-30-20 53	P527P5
BAEREF000003408	
34-30-10 53	P527P1
BAEREF000003427	
27-33-00 05	CA3-R
27-33-00 05	CD3-R
27-33-00 07	CA3-R
27-33-00 07	CD3-R
BAEREF000003457	
27-33-00 05	CA3-P
27-33-00 05	CD3-P
27-33-00 07	CA3-P
27-33-00 07	CD3-P
BAEREF000003509	
23-31-20 52	P629
33-20-10 10	AC-R
BAEREF000003522	

PART NUMBER CH-SECT-UNIT-FIG-ITEM	IDENT
BAEREF000003522	
28-41-10 02	CC2-P
28-41-10 03	CC2-P
BAEREF000003533	
33-20-10 10	J-R
BAEREF000003649	
33-20-10 10	J-P
BAEREF000003662	
22-10-40 53	PBA-1
27-24-10 02	BA1-R
27-24-10 03	BA1-P
31-20-35 02	BA1-P
31-20-35 03	BA1-R
33-10-05 05	BA1-R
33-10-05 07	BA1-R
33-10-05 08	BA1-R
33-10-05 09	BA1-R
33-10-05 11	BA1-R
BAEREF000003708	
33-10-10 31	CA2-P
BAEREF000003897	
22-10-40 53	P129R
33-10-10 31	CD2-R
34-30-10 53	P129R
34-30-20 53	P129R
BAEREF000003898	
27-00-10 03	P1-JA-R
27-00-10 04	P1-JA-P
27-33-00 05	P1-JA-P
27-33-00 07	P1-JA-P
27-50-10 02	P1-JA-P
27-61-10 03	P1-JA-R
27-61-10 04	P1-JA-R
27-61-10 08	P1-JA-P
28-21-05 02	P1-JA-R
28-21-05 03	P1-JA-R
28-21-05 04	P1-JA-R
32-60-10 04	P1-JA-P
32-60-20 02	P1-JA-P
32-60-30 02	P1-JA-P
32-60-30 03	P1-JA-P
33-40-10 05	P1-JA-R
33-40-10 06	P1-JA-R
33-40-20 04	P1-JA-R
33-40-30 03	P1-JA-R
BAEREF000003902	
34-30-10 53	P129C
BAEREF000003904	
34-30-20 53	P129M
BAEREF000003905	
22-10-40 53	P129G

PART NUMBER CH-SECT-UNIT-FIG-ITEM	IDENT
BAEREF000003937	
33-10-05 05	AB1-R
33-10-05 07	AB1-R
33-10-05 08	AB1-R
33-10-05 09	AB1-R
33-10-05 11	AB1-R
33-10-20 04	AA1-R
33-10-20 04	AB1-R
33-10-20 07	AA1-R
33-10-20 07	AB1-R
33-10-20 08	AA1-R
33-10-20 08	AB1-R
BAEREF000003977	
21-60-10 11	P1-ZT-P
BAEREF000004011	
28-41-10 02	P4-JA-P
28-41-10 03	P4-JA-P
28-41-20 03	P4-JA-P
28-41-30 02	P4-JA-P
BAEREF000004012	
28-41-10 02	JP1-DB-R
28-41-10 02	P4-JA-R
28-41-10 03	JP1-DB-R
28-41-10 03	P4-JA-R
28-41-20 03	JP1-DB-R
28-41-20 03	P4-JA-R
28-41-30 02	JP1-DB-R
28-41-30 02	P4-JA-R
BAEREF000004029	
21-60-10 10	SH-P
21-60-20 03	SH-P
BAEREF000004075	
28-21-05 03	P2-JA-P
28-21-05 04	P2-JA-P
28-40-10 04	JAP3-R
28-40-10 05	JAP3-R
33-40-10 05	P3-JA-R
33-40-10 06	P3-JA-R
73-20-10 03	JAP3-P
78-30-05 01	P3-JA-P
78-30-05 02	P3-JA-P
BAEREF000004077	
27-33-00 05	P2-P
27-33-00 07	P2-JA-P
28-21-05 02	P2-JA-R
28-21-05 03	P2-JA-R
28-21-05 04	P2-JA-R
28-40-10 04	JAP2-R
28-40-10 05	JAP2-R
32-60-10 04	P2-JA-P
32-60-20 02	P2-JA-P

PART NUMBER CH-SECT-UNIT-FIG-ITEM	IDENT
BAEREF000004077	
33-40-20 04	P2-JA-R
34-13-01 04	P2-JA-P
34-13-01 08	JA-P2-P
BAEREF000004149	
28-40-10 04	JAP3-P
28-40-10 05	JAP3-P
73-20-10 03	JAP3-R
78-30-05 01	P3-JA-R
78-30-05 02	P3-JA-R
BAEREF000004157	
33-40-10 05	P3-JA-P
33-40-10 06	P3-JA-P
BAEREF000004167	
33-10-05 05	AB1-P
33-10-05 07	AB1-P
33-10-05 08	AB1-P
33-10-05 09	AB1-P
33-10-05 11	AB1-P
33-10-20 04	AA1-P
33-10-20 04	AB1-P
33-10-20 07	AA1-P
33-10-20 07	AB1-P
33-10-20 08	AA1-P
33-10-20 08	AB1-P
BAEREF000004175	
21-60-10 11	P1-ZT-R
BAEREF000004180	
21-60-10 10	SH-R
21-60-20 03	SH-R
BAEREF000004218	
33-10-20 08	A-AA-R
33-10-20 08	A-AB-R
33-10-20 08	C-AA-R
BAEREF000004290	
32-60-10 04	CC2-P
BAEREF000004313	
27-00-10 04	P1-JA-R
27-33-00 05	P1-JA-R
27-33-00 07	P1-JA-R
32-60-10 04	P1-JA-R
32-60-10 04	P2-JA-R
32-60-20 02	P1-JA-R
33-40-10 05	P1-JA-P
33-40-10 06	P1-JA-P
BAEREF000004326	
33-10-10 31	CA1-P
33-10-20 04	CA1-P
33-10-20 07	CA1-P
33-10-20 08	CA1-P
BAEREF000004328	

PART NUMBER CH-SECT-UNIT-FIG-ITEM	IDENT
BAEREF000004328	
27-00-10 03	P1-JA-P
27-50-10 02	P1-JA-R
27-61-10 03	P1-JA-P
27-61-10 04	P1-JA-P
27-61-10 08	P1-JA-R
28-21-05 02	P1-JA-P
28-21-05 03	P1-JA-P
28-21-05 04	P1-JA-P
32-60-30 02	P1-JA-R
32-60-30 03	P1-JA-R
33-40-20 04	P1-JA-P
33-40-30 03	P1-JA-P
BAEREF000004329	
27-33-00 05	P2-P
27-33-00 05	P2-R
27-33-00 07	P2-JA-R
28-40-10 04	JAP2-P
28-40-10 05	JAP2-P
32-60-20 02	P2-JA-R
33-40-20 04	P2-JA-P
34-13-01 04	P2-JA-R
34-13-01 08	JA-P2-R
BAEREF000004349	
33-10-20 04	CD1-P
33-10-20 07	CD1-P
33-10-20 08	CD1-P
BAEREF000004350	
33-10-20 04	CC1-P
33-10-20 07	CC1-P
33-10-20 08	CC1-P
BAEREF000004352	
24-50-01 05	RE-DAB
24-50-01 05	RF-DAB
24-50-01 06	RE-DAB
24-50-01 06	RF-DAB
24-50-01 07	RE-DAB
24-50-01 07	RF-DAB
BAEREF000004362	
28-41-10 02	JP2-DB-R
28-41-10 03	JP2-DB-R
28-41-20 03	JP2-DB-R
28-41-30 02	JP2-DB-R
33-30-05 07	JP2-DA-R
33-30-05 08	JP2-DA-R
BAEREF000004392	
28-41-10 02	CC2-R
28-41-10 03	CC2-R
32-60-10 04	CC2-R
33-10-20 04	CC2-P
33-10-20 07	CC2-P

PART NUMBER CH-SECT-UNIT-FIG-ITEM	IDENT
BAEREF000004392	
33-10-20 08	CC2-P
BAEREF000004490	
32-60-10 04	ND-P
BAEREF000004560	
78-30-05 01	P801A
78-30-05 01	P801B
78-30-05 02	P801A
78-30-05 02	P801B
BA02801-1	
30-40-15 07	LC
30-40-15 07	MC
30-40-15 10	LC
30-40-15 10	MC
30-40-15 11	LC
30-40-15 11	MC
30-40-15 12	LC
30-40-15 12	MC
BDX66A	
33-10-20 04	D-Y-DAE
33-10-20 04	Y-DAE
33-10-20 07	D-Y-DAE
33-10-20 07	Y-DAE
33-10-20 08	D-Y-DAE
33-10-20 08	Y-DAE
BDX67A	
33-10-05 05	C-S-DAE
33-10-05 05	C-V-DAE
33-10-05 05	C-X-DAE
33-10-05 05	D-T-DAE
33-10-05 05	D-V-DAE
33-10-05 05	S-DAE
33-10-05 05	T-DAE
33-10-05 05	V-DAE
33-10-05 05	W-DAE
33-10-05 05	X-DAE
33-10-05 07	C-S-DAE
33-10-05 07	C-V-DAE
33-10-05 07	C-X-DAE
33-10-05 07	D-T-DAE
33-10-05 07	D-V-DAE
33-10-05 07	S-DAE
33-10-05 07	T-DAE
33-10-05 07	V-DAE
33-10-05 07	W-DAE
33-10-05 07	X-DAE
33-10-05 08	C-S-DAE
33-10-05 08	C-V-DAE
33-10-05 08	C-X-DAE
33-10-05 08	D-T-DAE
33-10-05 08	D-V-DAE

PART NUMBER CH-SECT-UNIT-FIG-ITEM	IDENT
BDX67A	
33-10-05 08	S-DAE
33-10-05 08	T-DAE
33-10-05 08	V-DAE
33-10-05 08	W-DAE
33-10-05 08	X-DAE
33-10-05 09	C-S-DAE
33-10-05 09	C-V-DAE
33-10-05 09	C-X-DAE
33-10-05 09	D-T-DAE
33-10-05 09	D-V-DAE
33-10-05 09	S-DAE
33-10-05 09	T-DAE
33-10-05 09	V-DAE
33-10-05 09	W-DAE
33-10-05 09	X-DAE
33-10-05 11	C-S-DAE
33-10-05 11	C-V-DAE
33-10-05 11	C-X-DAE
33-10-05 11	D-T-DAE
33-10-05 11	D-V-DAE
33-10-05 11	S-DAE
33-10-05 11	T-DAE
33-10-05 11	V-DAE
33-10-05 11	W-DAE
33-10-05 11	X-DAE
33-10-20 04	C-T-DAE
33-10-20 04	C-U-DAE
33-10-20 04	C-Y-DAE
33-10-20 04	D-S-DAE
33-10-20 04	S-DAE
33-10-20 04	T-DAE
33-10-20 04	U-DAE
33-10-20 04	Y-DAE
33-10-20 07	C-T-DAE
33-10-20 07	C-U-DAE
33-10-20 07	C-Y-DAE
33-10-20 07	D-S-DAE
33-10-20 07	S-DAE
33-10-20 07	T-DAE
33-10-20 07	U-DAE
33-10-20 07	Y-DAE
33-10-20 08	C-T-DAE
33-10-20 08	C-U-DAE
33-10-20 08	C-Y-DAE
33-10-20 08	D-S-DAE
33-10-20 08	S-DAE
33-10-20 08	T-DAE
33-10-20 08	U-DAE
33-10-20 08	Y-DAE
BE185129ECXX	

PART NUMBER CH-SECT-UNIT-FIG-ITEM	IDENT
BE185129ECXX	
49-60-30 06	M4-DE
49-60-30 08	M4-DE
49-60-30 09	M4-DE
49-60-30 11	M4-DE
BE2315ABCD	
49-60-30 06	M2-DE
49-60-30 08	M2-DE
49-60-30 09	M2-DE
49-60-30 11	M2-DE
BE2321ABCD	
49-60-30 06	M3-DE
49-60-30 08	M3-DE
49-60-30 09	M3-DE
49-60-30 11	M3-DE
BHGD21TL28WBS59 * 5	
27-33-00 05	H-DR
27-33-00 05	L-DR
27-33-00 07	H-DR
27-33-00 07	L-DR
BYW54	
21-60-10 08	ME-DAC
21-60-10 10	ME-DAC
21-60-10 10	RG-DAB
21-60-10 10	RH-DAB
21-60-10 11	ME-DAC
21-60-10 11	RG-DAB
21-60-10 11	RH-DAB
24-90-01 05	ME-DAC
24-90-01 06	ME-DAC
26-20-10 03	MA-DAC
26-20-10 03	MB-DAC
26-20-10 03	MC-DAC
26-20-10 03	MD-DAC
27-33-00 05	M
27-33-00 05	N
27-33-00 05	Z-CA
27-33-00 05	Z-CA
27-33-00 05	Z-CA
27-33-00 05	Z-CA
27-33-00 05	Z-CA
27-33-00 05	Z-CA
27-33-00 05	Z-CA
27-33-00 05	Z-CA
27-33-00 05	Z-CA
27-33-00 05	Z-CA
27-33-00 05	Z-CA
27-33-00 05	Z-CA
27-33-00 05	Z-CA
27-33-00 05	Z-CA
27-33-00 05	Z-CD

PART NUMBER CH-SECT-UNIT-FIG-ITEM	IDENT
BYW54	
27-33-00 05	Z-CD
27-33-00 05	Z-CD
27-33-00 05	Z-CD
27-33-00 05	Z-CD
27-33-00 05	Z-CD
27-33-00 05	Z-CD
27-33-00 07	M
27-33-00 07	N
27-33-00 07	Z-CA
27-33-00 07	Z-CA
27-33-00 07	Z-CA
27-33-00 07	Z-CA
27-33-00 07	Z-CA
27-33-00 07	Z-CA
27-33-00 07	Z-CA
27-33-00 07	Z-CA
27-33-00 07	Z-CA
27-33-00 07	Z-CA
27-33-00 07	Z-CA
27-33-00 07	Z-CA
27-33-00 07	Z-CA
27-33-00 07	Z-CA
27-33-00 07	Z-CD
27-33-00 07	Z-CD
27-33-00 07	Z-CD
27-33-00 07	Z-CD
27-33-00 07	Z-CD
27-33-00 07	Z-CD
27-33-00 07	Z-CD
27-61-10 08	GM-CC
27-61-10 08	GR-CC
27-61-10 08	RJ-DAB
28-41-10 02	MF-DAC
28-41-10 02	MK-DAC
28-41-10 02	MM-DAC
28-41-10 03	MF-DAC
28-41-10 03	MK-DAC
28-41-10 03	MM-DAC
28-41-20 03	HA-DB
28-41-20 03	HC-DB
28-41-20 03	HD-DB
28-41-20 03	HE-DB
28-41-20 03	HH-DB
28-41-20 03	HJ-DB
28-41-20 03	R-JA
28-41-30 02	U-JA
28-41-30 02	V-JA
30-20-10 02	C-GG
31-50-05 03	G-WX
31-50-05 03	H-WX
31-50-05 03	L-ZJ

PART NUMBER CH-SECT-UNIT-FIG-ITEM	IDENT
BYW54	
31-50-05 03	M-ZJ
31-50-05 03	N-ZJ
31-50-05 03	P-ZJ
31-50-05 03	R-ZJ
32-60-10 04	GA-CC
32-60-10 04	GB-CC
32-60-10 04	GC-CC
32-60-10 04	GD-CC
32-60-10 04	GE-CC
32-60-10 04	GF-CC
32-60-10 04	GG-CC
32-60-10 04	GJ-CC
33-40-15 02	C-AP
33-40-15 02	D-AP
49-60-30 06	B
49-60-30 06	BB-ZK
49-60-30 06	1-AB-DE
49-60-30 06	1-BC-DE
49-60-30 06	2-AB-DE
49-60-30 06	2-BC-DE
49-60-30 06	3-AB-DE
49-60-30 06	3-BC-DE
49-60-30 06	4-AB-DE
49-60-30 06	4-BC-DE
49-60-30 06	5-AB-DE
49-60-30 06	5-BC-DE
49-60-30 06	6-AB-DE
49-60-30 08	B
49-60-30 08	BB-ZK
49-60-30 08	1-AB-DE
49-60-30 08	1-BC-DE
49-60-30 08	2-AB-DE
49-60-30 08	2-BC-DE
49-60-30 08	3-AB-DE
49-60-30 08	3-BC-DE
49-60-30 08	4-AB-DE
49-60-30 08	4-BC-DE
49-60-30 08	5-AB-DE
49-60-30 08	5-BC-DE
49-60-30 08	6-AB-DE
49-60-30 09	B
49-60-30 09	BB-ZK
49-60-30 09	1-AB-DE
49-60-30 09	1-BC-DE
49-60-30 09	2-AB-DE
49-60-30 09	2-BC-DE
49-60-30 09	3-AB-DE
49-60-30 09	3-BC-DE
49-60-30 09	4-AB-DE
49-60-30 09	4-BC-DE

PART NUMBER CH-SECT-UNIT-FIG-ITEM	IDENT
BYW54	
49-60-30 09	5-AB-DE
49-60-30 09	5-BC-DE
49-60-30 09	6-AB-DE
49-60-30 11	B
49-60-30 11	BB-ZK
49-60-30 11	1-AB-DE
49-60-30 11	1-BC-DE
49-60-30 11	2-AB-DE
49-60-30 11	2-BC-DE
49-60-30 11	3-AB-DE
49-60-30 11	3-BC-DE
49-60-30 11	4-AB-DE
49-60-30 11	4-BC-DE
49-60-30 11	5-AB-DE
49-60-30 11	5-BC-DE
49-60-30 11	6-AB-DE
73-20-02 05	GH-CC
73-20-02 05	NHA-CG
BYX36-600	
32-60-30 02	WR
32-60-30 03	WR
BYX38-600	
24-50-01 05	N-ZL
24-50-01 05	R-ZL
24-50-01 05	S-ZL
24-50-01 06	N-ZL
24-50-01 06	R-ZL
24-50-01 06	S-ZL
24-50-01 07	N-ZL
24-50-01 07	R-ZL
24-50-01 07	S-ZL
80-10-10 04	P-ZL
BYX42-600	
49-60-30 06	CR1-ZKA
49-60-30 06	CR2-ZKA
49-60-30 06	CR3-ZKA
49-60-30 06	CR4-ZKA
49-60-30 06	CR6-ZKA
49-60-30 06	CR7-ZKA
49-60-30 08	CR1-ZKA
49-60-30 08	CR2-ZKA
49-60-30 08	CR3-ZKA
49-60-30 08	CR4-ZKA
49-60-30 08	CR6-ZKA
49-60-30 09	CR1-ZKA
49-60-30 09	CR2-ZKA
49-60-30 09	CR3-ZKA
49-60-30 09	CR4-ZKA
49-60-30 09	CR6-ZKA
49-60-30 11	CR3-ZKA

PART NUMBER CH-SECT-UNIT-FIG-ITEM	IDENT
BYX42-600	
49-60-30 11	CR4-ZKA
49-60-30 11	CR6-ZKA
BYX48-600	
24-50-01 05	N-ZL
24-50-01 05	R-ZL
24-50-01 05	S-ZL
24-50-01 06	N-ZL
24-50-01 06	R-ZL
24-50-01 06	S-ZL
24-50-01 07	N-ZL
24-50-01 07	R-ZL
24-50-01 07	S-ZL
80-10-10 04	P-ZL
BZT03C12	
23-31-20 52	FH627-1
BZ2RQ1T04	
21-60-10 08	BP-BA
21-60-10 10	BP-BA
21-60-10 11	BP-BA
52-70-10 02	SF
52-70-10 02	SK
B01A2-14128A	
21-60-10 08	XN
21-60-10 08	XP
21-60-10 10	XN
21-60-10 10	XP
21-60-10 11	XN
21-60-10 11	XP
B1443-1	
27-33-00 05	RS
27-33-00 05	RW
27-33-00 07	RS
27-33-00 07	RW
B375-01	
31-50-05 03	A-WX
31-50-05 03	B-WX
31-50-05 03	C-WX
31-50-05 03	D-WX
33-10-05 05	PB-BA
33-10-05 05	PC-BA
33-10-05 05	PE-BA
33-10-05 05	PF-BA
33-10-05 05	PG-BA
33-10-10 31	L1
33-10-10 31	L1-WX
33-10-10 31	L10
33-10-10 31	L11
33-10-10 31	L12
33-10-10 31	L13
33-10-10 31	L14

PART NUMBER CH-SECT-UNIT-FIG-ITEM	IDENT
B375-01	
33-10-10 31	L15
33-10-10 31	L16
33-10-10 31	L17
33-10-10 31	L18
33-10-10 31	L19
33-10-10 31	L2
33-10-10 31	L2-WX
33-10-10 31	L20
33-10-10 31	L21
33-10-10 31	L22
33-10-10 31	L23
33-10-10 31	L24
33-10-10 31	L3
33-10-10 31	L3-WX
33-10-10 31	L4
33-10-10 31	L4-WX
33-10-10 31	L5
33-10-10 31	L5-WX
33-10-10 31	L6
33-10-10 31	L7
33-10-10 31	L8
33-10-10 31	L9
B375-01-001	
33-30-05 07	JA-DB
33-30-05 08	JA-DB
B9021BB	
73-20-01 05	VW-BA
73-20-02 05	VX-BA
CA3106R12SF80	
21-60-20 02	YH
21-60-20 03	YH
CA3106R12S3SF80	
21-60-20 02	QA
21-60-20 03	QA
CB02701	
30-40-15 07	QC-GK
30-40-15 07	QD
30-40-15 10	QC-GK
30-40-15 10	QD
30-40-15 11	QC-GK
30-40-15 11	QD
30-40-15 12	QC-GK
30-40-15 12	QD
CD16139-2A0	
30-80-10 03	DA-P
CE216DE	
21-31-10 07	EC-DAJ
21-31-10 07	ED-DAJ
21-31-10 07	EE-DAJ
CG7PT	

PART NUMBER CH-SECT-UNIT-FIG-ITEM	IDENT
CG7PT	
26-10-20 02	FZ
CPT06E14-18S	
21-60-10 08	DK
21-60-10 10	DK
21-60-10 11	DK
CV7040	
33-10-10 31	AM
33-10-10 31	AN
CV7313	
21-31-10 07	SD-DAJ
21-31-10 07	SE-DAJ
21-31-10 07	SF-DAJ
24-21-17 03	E-XZ
24-21-17 04	E-XZ
24-50-01 05	DA-GG
24-50-01 05	DB-GG
24-50-01 05	DC-GG
24-50-01 05	N-ZL
24-50-01 05	R-ZL
24-50-01 05	S-ZL
24-50-01 05	SR-DAJ
24-50-01 05	SS-DAJ
24-50-01 05	W-GA
24-50-01 06	DA-GG
24-50-01 06	DB-GG
24-50-01 06	DC-GG
24-50-01 06	N-ZL
24-50-01 06	R-ZL
24-50-01 06	S-ZL
24-50-01 06	W-GA
24-50-01 07	DA-GG
24-50-01 07	DB-GG
24-50-01 07	DC-GG
24-50-01 07	N-ZL
24-50-01 07	R-ZL
24-50-01 07	S-ZL
24-50-01 07	SR-DAJ
24-50-01 07	SS-DAJ
24-50-01 07	W-GA
26-10-10 03	SA-DAJ
26-10-10 03	SU-DAJ
30-20-10 02	SB-DAJ
30-20-10 02	SC-DAJ
32-60-10 04	SD-DAJ
32-60-10 04	SG-DAJ
33-10-05 05	SJ-DAJ
33-10-05 05	SK-DAJ
33-10-05 07	SJ-DAJ
33-10-05 07	SK-DAJ
33-10-05 08	SJ-DAJ

PART NUMBER CH-SECT-UNIT-FIG-ITEM	IDENT
CV7313	
33-10-05 08	SK-DAJ
33-10-05 09	SJ-DAJ
33-10-05 09	SK-DAJ
33-10-05 11	SJ-DAJ
33-10-05 11	SK-DAJ
34-13-01 04	SL-DAJ
34-13-01 04	SM-DAJ
34-13-01 04	SN-DAJ
34-13-01 04	SP-DAJ
34-13-01 08	SL-DAJ
34-13-01 08	SM-DAJ
34-13-01 08	SN-DAJ
34-13-01 08	SP-DAJ
49-60-10 05	L-ZKA
49-60-10 05	P-ZKA
49-60-10 05	Z-ZK
80-10-10 04	P-ZL
80-10-10 04	V-XZ
80-10-10 04	W-GA
80-10-10 04	W-XZ
80-10-10 04	Z-ZK
C52-10	
33-10-05 05	NS-CG
33-10-05 05	PH-CG
33-10-05 05	PT-CG
33-10-05 05	PX-CG
33-10-05 07	NS-CG
33-10-05 07	PH-CG
33-10-05 07	PT-CG
33-10-05 07	PX-CG
33-10-05 08	NS-CG
33-10-05 08	PH-CG
33-10-05 08	PT-CG
33-10-05 08	PX-CG
33-10-05 09	NS-CG
33-10-05 09	PH-CG
33-10-05 09	PT-CG
33-10-05 09	PX-CG
33-10-05 11	NS-CG
33-10-05 11	PH-CG
33-10-05 11	PT-CG
33-10-05 11	PX-CG
C82106-4	
27-33-00 05	RC-SSU1
27-33-00 05	RD-SSU2
27-33-00 07	RC-SSU1
27-33-00 07	RD-SSU2
C82106-5	
27-33-00 05	RC-SSU1
27-33-00 05	RD-SSU2

PART NUMBER CH-SECT-UNIT-FIG-ITEM	IDENT
C82106-5	
27-33-00 07	RC-SSU1
27-33-00 07	RD-SSU2
C9032-001	
32-60-20 02	BC
32-60-20 02	BJ
C9032-001A	
30-20-10 02	DD-CC
30-20-10 02	ED-CC
C9032-001B	
30-20-10 02	DD-CC
30-20-10 02	ED-CC
31-50-01 04	DA-CC
31-50-01 04	DB-CC
31-50-01 04	DC-CC
31-50-01 04	DD-CC
31-50-01 04	DE-CC
31-50-01 04	DF-CC
31-50-01 04	DG-CC
31-50-01 04	DH-CC
31-50-01 04	DJ-CC
31-50-01 04	DK-CC
31-50-01 04	DL-CC
31-50-01 04	DM-CC
31-50-01 04	DN-CC
31-50-01 04	DP-CC
31-50-01 04	DR-CC
31-50-01 04	DS-CC
31-50-01 04	DT-CC
31-50-01 04	EA-CC
31-50-01 04	EB-CC
31-50-01 04	EC-CC
31-50-01 04	ED-CC
31-50-01 04	EE-CC
31-50-01 04	EF-CC
31-50-01 04	EG-CC
31-50-01 04	EH-CC
31-50-01 04	EJ-CC
31-50-01 04	EK-CC
31-50-01 04	EL-CC
31-50-01 04	EM-CC
31-50-01 04	EN-CC
31-50-01 04	EP-CC
31-50-01 04	ER-CC
31-50-01 04	ET-CC
31-50-01 04	FB-CG
31-50-01 04	FC-CG
31-50-01 04	FD-CG
31-50-01 04	FE-CG
31-50-01 04	GB-CG
31-50-01 04	GC-CG

PART NUMBER CH-SECT-UNIT-FIG-ITEM	IDENT
C9032-001B	
31-50-01 04	GD-CG
31-50-01 04	GF-CG
31-50-01 04	GG-CG
31-50-01 04	GH-CG
31-50-01 04	GK-CG
31-50-01 04	GL-CG
31-50-01 04	GM-CG
31-50-01 04	GR-CG
31-50-01 04	GS-CG
31-50-01 04	GT-CG
31-50-01 04	GU-CG
31-50-01 04	HB-CG
31-50-01 04	HC-CG
31-50-01 04	HD-CG
31-50-01 04	HF-CG
31-50-01 04	HG-CG
31-50-01 04	HH-CG
31-50-01 04	HK-CG
31-50-01 04	HL-CG
31-50-01 04	HM-CG
31-50-01 04	HP-CG
31-50-01 04	HR-CG
31-50-01 04	HS-CG
31-50-01 04	HT-CG
31-50-01 04	HU-CG
31-50-01 04	HV-CG
31-50-01 04	HX-CG
31-50-01 04	JU-CG
31-50-01 04	JV-CG
31-50-01 04	JX-CG
31-50-01 07	DA-CC
31-50-01 07	DB-CC
31-50-01 07	DC-CC
31-50-01 07	DD-CC
31-50-01 07	DE-CC
31-50-01 07	DF-CC
31-50-01 07	DG-CC
31-50-01 07	DH-CC
31-50-01 07	DJ-CC
31-50-01 07	DK-CC
31-50-01 07	DL-CC
31-50-01 07	DM-CC
31-50-01 07	DN-CC
31-50-01 07	DP-CC
31-50-01 07	DR-CC
31-50-01 07	DS-CC
31-50-01 07	DT-CC
31-50-01 07	EA-CC
31-50-01 07	EB-CC
31-50-01 07	EC-CC

PART NUMBER CH-SECT-UNIT-FIG-ITEM	IDENT
C9032-001B	
31-50-01 07	ED-CC
31-50-01 07	EE-CC
31-50-01 07	EF-CC
31-50-01 07	EG-CC
31-50-01 07	EH-CC
31-50-01 07	EJ-CC
31-50-01 07	EK-CC
31-50-01 07	EL-CC
31-50-01 07	EM-CC
31-50-01 07	EN-CC
31-50-01 07	EP-CC
31-50-01 07	ER-CC
31-50-01 07	ET-CC
31-50-01 07	FB-CG
31-50-01 07	FC-CG
31-50-01 07	FD-CG
31-50-01 07	FE-CG
31-50-01 07	GB-CG
31-50-01 07	GC-CG
31-50-01 07	GD-CG
31-50-01 07	GF-CG
31-50-01 07	GG-CG
31-50-01 07	GH-CG
31-50-01 07	GK-CG
31-50-01 07	GL-CG
31-50-01 07	GM-CG
31-50-01 07	GR-CG
31-50-01 07	GS-CG
31-50-01 07	GT-CG
31-50-01 07	GU-CG
31-50-01 07	HB-CG
31-50-01 07	HC-CG
31-50-01 07	HD-CG
31-50-01 07	HF-CG
31-50-01 07	HG-CG
31-50-01 07	HH-CG
31-50-01 07	HK-CG
31-50-01 07	HL-CG
31-50-01 07	HM-CG
31-50-01 07	HP-CG
31-50-01 07	HR-CG
31-50-01 07	HS-CG
31-50-01 07	HT-CG
31-50-01 07	HU-CG
31-50-01 07	HV-CG
31-50-01 07	HX-CG
31-50-01 07	JU-CG
31-50-01 07	JV-CG
31-50-01 07	JX-CG
31-50-01 08	DA-CC

PART NUMBER CH-SECT-UNIT-FIG-ITEM	IDENT
C9032-001B	
31-50-01 08	DB-CC
31-50-01 08	DC-CC
31-50-01 08	DD-CC
31-50-01 08	DE-CC
31-50-01 08	DF-CC
31-50-01 08	DG-CC
31-50-01 08	DH-CC
31-50-01 08	DJ-CC
31-50-01 08	DK-CC
31-50-01 08	DL-CC
31-50-01 08	DM-CC
31-50-01 08	DN-CC
31-50-01 08	DP-CC
31-50-01 08	DR-CC
31-50-01 08	DS-CC
31-50-01 08	DT-CC
31-50-01 08	EA-CC
31-50-01 08	EB-CC
31-50-01 08	EC-CC
31-50-01 08	ED-CC
31-50-01 08	EE-CC
31-50-01 08	EF-CC
31-50-01 08	EG-CC
31-50-01 08	EH-CC
31-50-01 08	EJ-CC
31-50-01 08	EK-CC
31-50-01 08	EL-CC
31-50-01 08	EM-CC
31-50-01 08	EN-CC
31-50-01 08	EP-CC
31-50-01 08	ER-CC
31-50-01 08	ET-CC
31-50-01 08	FB-CG
31-50-01 08	FC-CG
31-50-01 08	FD-CG
31-50-01 08	FE-CG
31-50-01 08	GB-CG
31-50-01 08	GC-CG
31-50-01 08	GD-CG
31-50-01 08	GF-CG
31-50-01 08	GG-CG
31-50-01 08	GH-CG
31-50-01 08	GK-CG
31-50-01 08	GL-CG
31-50-01 08	GM-CG
31-50-01 08	GR-CG
31-50-01 08	GS-CG
31-50-01 08	GT-CG
31-50-01 08	GU-CG
31-50-01 08	HB-CG

PART NUMBER CH-SECT-UNIT-FIG-ITEM	IDENT
C9032-001B	
31-50-01 08	HC-CG
31-50-01 08	HD-CG
31-50-01 08	HF-CG
31-50-01 08	HG-CG
31-50-01 08	HH-CG
31-50-01 08	HK-CG
31-50-01 08	HL-CG
31-50-01 08	HM-CG
31-50-01 08	HP-CG
31-50-01 08	HR-CG
31-50-01 08	HS-CG
31-50-01 08	HT-CG
31-50-01 08	HU-CG
31-50-01 08	HV-CG
31-50-01 08	HX-CG
31-50-01 08	JU-CG
31-50-01 08	JV-CG
31-50-01 08	JX-CG
31-50-01 09	DA-CC
31-50-01 09	DB-CC
31-50-01 09	DC-CC
31-50-01 09	DD-CC
31-50-01 09	DE-CC
31-50-01 09	DF-CC
31-50-01 09	DG-CC
31-50-01 09	DH-CC
31-50-01 09	DJ-CC
31-50-01 09	DK-CC
31-50-01 09	DL-CC
31-50-01 09	DM-CC
31-50-01 09	DN-CC
31-50-01 09	DP-CC
31-50-01 09	DR-CC
31-50-01 09	DS-CC
31-50-01 09	DT-CC
31-50-01 09	EA-CC
31-50-01 09	EB-CC
31-50-01 09	EC-CC
31-50-01 09	ED-CC
31-50-01 09	EE-CC
31-50-01 09	EF-CC
31-50-01 09	EG-CC
31-50-01 09	EH-CC
31-50-01 09	EJ-CC
31-50-01 09	EK-CC
31-50-01 09	EL-CC
31-50-01 09	EM-CC
31-50-01 09	EN-CC
31-50-01 09	EP-CC
31-50-01 09	ER-CC

PART NUMBER CH-SECT-UNIT-FIG-ITEM	IDENT
C9032-001B	
31-50-01 09	ET-CC
31-50-01 09	FB-CG
31-50-01 09	FC-CG
31-50-01 09	FD-CG
31-50-01 09	FE-CG
31-50-01 09	GB-CG
31-50-01 09	GC-CG
31-50-01 09	GD-CG
31-50-01 09	GF-CG
31-50-01 09	GG-CG
31-50-01 09	GH-CG
31-50-01 09	GK-CG
31-50-01 09	GL-CG
31-50-01 09	GM-CG
31-50-01 09	GR-CG
31-50-01 09	GS-CG
31-50-01 09	GT-CG
31-50-01 09	GU-CG
31-50-01 09	HB-CG
31-50-01 09	HC-CG
31-50-01 09	HD-CG
31-50-01 09	HF-CG
31-50-01 09	HG-CG
31-50-01 09	HH-CG
31-50-01 09	HK-CG
31-50-01 09	HL-CG
31-50-01 09	HM-CG
31-50-01 09	HP-CG
31-50-01 09	HR-CG
31-50-01 09	HS-CG
31-50-01 09	HT-CG
31-50-01 09	HU-CG
31-50-01 09	HV-CG
31-50-01 09	HX-CG
31-50-01 09	JU-CG
31-50-01 09	JV-CG
31-50-01 09	JX-CG
31-50-01 14	DA-CC
31-50-01 14	DB-CC
31-50-01 14	DC-CC
31-50-01 14	DD-CC
31-50-01 14	DE-CC
31-50-01 14	DF-CC
31-50-01 14	DG-CC
31-50-01 14	DH-CC
31-50-01 14	DJ-CC
31-50-01 14	DK-CC
31-50-01 14	DL-CC
31-50-01 14	DM-CC
31-50-01 14	DN-CC

PART NUMBER CH-SECT-UNIT-FIG-ITEM	IDENT
C9032-001B	
31-50-01 14	DP-CC
31-50-01 14	DR-CC
31-50-01 14	DS-CC
31-50-01 14	DT-CC
31-50-01 14	DV-CC
31-50-01 14	DW-CC
31-50-01 14	EA-CC
31-50-01 14	EB-CC
31-50-01 14	EC-CC
31-50-01 14	ED-CC
31-50-01 14	EE-CC
31-50-01 14	EF-CC
31-50-01 14	EG-CC
31-50-01 14	EH-CC
31-50-01 14	EJ-CC
31-50-01 14	EK-CC
31-50-01 14	EL-CC
31-50-01 14	EM-CC
31-50-01 14	EN-CC
31-50-01 14	EP-CC
31-50-01 14	ER-CC
31-50-01 14	ET-CC
31-50-01 14	FB-CG
31-50-01 14	FC-CG
31-50-01 14	FD-CG
31-50-01 14	FE-CG
31-50-01 14	FG-CC
31-50-01 14	GB-CG
31-50-01 14	GC-CG
31-50-01 14	GD-CG
31-50-01 14	GF-CG
31-50-01 14	GG-CG
31-50-01 14	GH-CG
31-50-01 14	GK-CG
31-50-01 14	GL-CG
31-50-01 14	GM-CG
31-50-01 14	GR-CG
31-50-01 14	GS-CG
31-50-01 14	GT-CG
31-50-01 14	GU-CG
31-50-01 14	HB-CG
31-50-01 14	HC-CG
31-50-01 14	HD-CG
31-50-01 14	HF-CG
31-50-01 14	HG-CG
31-50-01 14	HH-CG
31-50-01 14	HK-CG
31-50-01 14	HL-CG
31-50-01 14	HM-CG
31-50-01 14	HP-CG

PART NUMBER CH-SECT-UNIT-FIG-ITEM	IDENT
C9032-001B	
31-50-01 14	HR-CG
31-50-01 14	HS-CG
31-50-01 14	HT-CG
31-50-01 14	HU-CG
31-50-01 14	HV-CG
31-50-01 14	HX-CG
31-50-01 14	JU-CG
31-50-01 14	JV-CG
31-50-01 14	JX-CG
C9032-009A	
49-60-10 05	H-DE
C9032-009B	
49-60-10 05	H-DE
C9032-047	
26-10-10 03	RK-CG
C9032-048	
26-10-10 03	RN-CG
DBMA25P	
31-50-05 03	P1-WX-R
33-10-10 31	P1-WX-R
DBMA25S	
31-50-05 03	P1-WX-P
33-10-10 31	P1-WX-P
DB20962	
31-50-05 03	P1-WX-P
DDMA50S	
22-10-40 53	P263
DD20964	
22-10-40 53	P263
DEMA9S	
78-30-05 01	P802
78-30-05 02	P802
DE44994	
78-30-05 01	P802
78-30-05 02	P802
DMN1-2	
34-30-10 53	ERNC
DPXBNA45333S04	
27-33-00 05	RC-SSU1
27-33-00 05	RC-SSU1
27-33-00 05	RD-SSU2
27-33-00 05	RD-SSU2
27-33-00 07	RC-SSU1
27-33-00 07	RC-SSU1
27-33-00 07	RD-SSU2
27-33-00 07	RD-SSU2
DPX2MA455-455-3 *	
3B0001	
78-30-05 01	P801A
78-30-05 01	P801B

PART NUMBER CH-SECT-UNIT-FIG-ITEM	IDENT
DPX2MA455-455-3 *	
3B0001	
78-30-05 02	P801A
78-30-05 02	P801B
D20418-2	
31-50-05 03	P1-WX-R
D20419	
78-30-05 01	P802
78-30-05 02	P802
D20419-16	
31-50-05 03	P1-WX-P
D20420-12	
22-10-40 53	P263
D33107	
33-40-10 05	B62-DAD
33-40-10 06	B62-DAD
D38IN5K500RLIN	
33-10-10 31	B
33-10-20 04	B-CC
33-10-20 07	B-CC
33-10-20 08	B-CC
D38999-20KG39SN	
26-10-10 03	TA1-R
26-10-10 03	TB1-R
28-40-20 02	J14-TA1
28-40-20 02	J14-TB1
28-40-30 05	J14-TA1
28-40-30 05	J14-TB1
28-40-40 02	J14-TA1
28-40-40 02	J14-TB1
77-40-10 02	J14-TA1
77-40-10 02	J14-TA2
79-30-10 02	J14-TA1
79-30-10 02	J14-TB1
D38999-24WG39SN	
34-30-10 53	J141
34-30-20 53	J151
D38999-24WH53SN	
34-30-10 53	J154
34-30-20 53	J184
D38999-24WJ61SN	
34-30-10 53	J135
34-30-20 53	J136
D38999-26FD05SN	
30-40-15 11	WG
30-40-15 11	WH
30-40-15 12	WG
30-40-15 12	WH
30-40-20 05	VP
30-40-20 05	VS
D38999-26KG41PN	

PART NUMBER CH-SECT-UNIT-FIG-ITEM	IDENT
D38999-26KG41PN	
30-20-10 02	P12-TA2
30-20-10 02	P12-TB2
D38999-26WG39PN	
34-30-10 53	P141
34-30-20 53	P151
D38999-26WH53PN	
34-30-10 53	P154
34-30-20 53	P184
D38999-26WJ61PN	
34-30-10 53	P135
34-30-20 53	P136
D492-04-001	
33-10-05 08	C-AB
33-10-20 07	C-AA
D492-05-001	
33-10-20 07	A-AA
33-10-20 07	A-AB
D5327	
32-60-30 02	PJ
32-60-30 03	PJ
ERS015DJ000	
21-60-10 11	A-ZT
21-60-10 11	B-ZT
21-60-10 11	C-ZT
E1250-003	
33-10-05 05	F-AB
33-10-05 05	G-AB
33-10-05 07	F-AB
33-10-05 07	G-AB
33-10-20 04	D-AA
33-10-20 04	D-AB
33-10-20 04	E-AA
33-10-20 04	E-AB
33-10-20 04	F-AA
33-10-20 04	G-AA
E311TS	
24-50-01 05	V-GA
24-50-01 06	V-GA
24-50-01 07	V-GA
E37040S	
30-30-20 02	A-CN
30-30-20 02	B-CN
E42024-1	
30-30-10 02	PK
E42024-2	
30-30-10 02	PL
FGBA24	
49-60-30 06	TSA
49-60-30 08	TSA
49-60-30 09	TSA

PART NUMBER CH-SECT-UNIT-FIG-ITEM	IDENT
FGBA24	
49-60-30 11	TSA
F10A5SCP102-5	
30-20-10 02	LL
30-20-10 02	ML
GCB3LV14GB183	
24-50-01 05	ZP
24-50-01 06	ZP
24-50-01 07	ZP
GE308	
31-50-05 03	E-UC
31-50-05 03	H-UC
GE4505	
33-40-30 03	JF
GE4581	
33-40-20 04	JR
33-40-20 04	KR
GE4587	
33-40-15 02	AL
33-40-15 02	AM
GE4594	
33-40-15 02	AL
33-40-15 02	AM
33-40-20 04	JS
33-40-20 04	KS
GTR1054G15M	
30-40-15 11	WG
30-40-15 11	WH
30-40-15 12	WG
30-40-15 12	WH
30-40-20 05	VP
30-40-20 05	VS
GTR42-10NACS1	
29-32-10 05	QN-R
31-20-60 02	AU-R
31-20-60 02	AW-R
GTR42-22NACS1	
34-30-10 53	P527P1
GTR62-12NACS1	
29-32-10 05	G-CC-R
31-20-60 02	G-R
GTR62-14MACS1	
30-30-20 02	A-CN-R
30-30-20 02	B-CN-R
30-30-20 02	CS-R
30-30-20 02	CU-R
GTR62-14NACS1	
33-10-20 04	CD1-R
33-10-20 07	CD1-R
33-10-20 08	CD1-R
GTR62-16NACS1	

PART NUMBER CH-SECT-UNIT-FIG-ITEM	IDENT
GTR62-16NACS1	
33-10-20 04	CA1-R
33-10-20 07	CA1-R
33-10-20 08	CA1-R
GTR62-20NACS1	
21-20-10 03	CC1-P
29-32-10 05	CC1-P
29-32-10 05	CC1-R
31-20-60 02	CC1-P
31-20-60 02	CC1-R
32-60-10 04	CC2-P
32-60-10 04	CC2-R
33-10-05 05	CC1-P
33-10-05 07	CC1-P
33-10-05 08	CC1-P
33-10-05 09	CC1-P
33-10-05 11	CC1-P
33-10-20 04	CC1-P
33-10-20 04	CC1-R
33-10-20 04	CC2-P
33-10-20 04	CC2-R
33-10-20 07	CC1-P
33-10-20 07	CC1-R
33-10-20 07	CC2-P
33-10-20 07	CC2-R
33-10-20 08	CC1-P
33-10-20 08	CC1-R
33-10-20 08	CC2-P
33-10-20 08	CC2-R
GTR62-22NACS1	
34-30-20 53	P527P5
GTR71-16NACS1	
33-10-20 04	CA1-P
33-10-20 04	CD1-P
33-10-20 07	CA1-P
33-10-20 07	CD1-P
33-10-20 08	CA1-P
33-10-20 08	CD1-P
GTR71-18NACS1	
22-10-40 53	PBA-1
27-24-10 02	BA1-R
27-24-10 03	BA1-P
33-10-05 05	BA1-P
33-10-05 07	BA1-P
33-10-05 08	BA1-P
33-10-05 09	BA1-P
33-10-05 11	BA1-P
G6868-04	
34-30-20 53	G527
G8801S21	
26-10-10 03	TB1-R

PART NUMBER CH-SECT-UNIT-FIG-ITEM	IDENT
G8801S21	
28-40-20 02	J14-TA1
28-40-20 02	J14-TB1
28-40-30 05	J14-TA1
28-40-30 05	J14-TB1
28-40-40 02	J14-TA1
28-40-40 02	J14-TB1
77-40-10 02	J14-TA1
77-40-10 02	J14-TA2
79-30-10 02	J14-TA1
79-30-10 02	J14-TB1
G8802-21N	
34-30-10 53	J141
34-30-10 53	P141
34-30-20 53	J151
34-30-20 53	P151
G8802-23N	
34-30-10 53	J154
34-30-10 53	P154
34-30-20 53	J184
34-30-20 53	P184
G8802-25N	
34-30-10 53	J135
34-30-10 53	P135
34-30-20 53	J136
34-30-20 53	P136
G9950-1	
33-40-10 05	HA
G9950-21	
33-40-10 05	JL
33-40-10 06	JL
HA5N	
30-30-20 02	AP-GG
30-30-20 02	AQ-GG
30-40-15 07	AP-GG
30-40-15 07	AQ-GG
30-40-15 10	AP-GG
30-40-15 10	AQ-GG
30-40-15 11	AP-GG
30-40-15 11	AQ-GG
30-40-15 12	AP-GG
30-40-15 12	AQ-GG
HC921H0467-000	
30-40-15 07	A-DAG
30-40-15 07	B-DAG
30-40-15 10	A-DAG
30-40-15 10	B-DAG
30-40-20 03	VQ
30-40-20 03	VT
HDD4SF2H06	
49-60-10 05	R-GA

PART NUMBER CH-SECT-UNIT-FIG-ITEM	IDENT
HDD45F2H06	
30-10-10 11	BA-DAB
30-40-15 07	BB-DAB
30-40-15 07	BC-DAB
30-40-15 10	BB-DAB
30-40-15 10	BC-DAB
30-40-15 11	BB-DAB
30-40-15 11	BC-DAB
30-40-15 12	BB-DAB
30-40-15 12	BC-DAB
HDS8SF2L03	
24-30-20 02	AB-DAB
24-30-20 03	AB-DAB
24-50-01 05	AA-DAB
24-50-01 05	AB-DAB
24-50-01 05	AC-DAB
24-50-01 06	AA-DAB
24-50-01 06	AB-DAB
24-50-01 06	AC-DAB
24-50-01 07	AA-DAB
24-50-01 07	AB-DAB
24-50-01 07	AC-DAB
HDS8SF3J03	
21-60-10 08	AJ-DAB
21-60-10 08	BF-DAB
21-60-10 08	BG-DAB
21-60-10 08	BH-DAB
21-60-10 08	BJ-DAB
21-60-10 08	BK-DAB
21-60-10 10	AJ-DAB
21-60-10 10	BF-DAB
21-60-10 10	BG-DAB
21-60-10 10	BH-DAB
21-60-10 10	BJ-DAB
21-60-10 10	BK-DAB
21-60-10 11	AJ-DAB
21-60-10 11	BF-DAB
21-60-10 11	BG-DAB
21-60-10 11	BH-DAB
21-60-10 11	BJ-DAB
21-60-10 11	BK-DAB
24-50-01 05	BD-DAB
24-50-01 05	BE-DAB
24-50-01 06	BD-DAB
24-50-01 07	BD-DAB
24-50-01 07	BE-DAB
27-61-10 04	AE-DAB
27-61-10 08	AE-DAB
28-41-10 02	BN-DAB
28-41-10 03	BN-DAB
28-41-20 03	GB-DB

PART NUMBER CH-SECT-UNIT-FIG-ITEM	IDENT
HDS8SF3J03	
28-41-20 03	GC-DB
28-41-20 03	GD-DB
30-40-15 07	BL-DAB
30-40-15 07	BM-DAB
30-40-15 10	BL-DAB
30-40-15 10	BM-DAB
30-40-15 11	BL-DAB
30-40-15 11	BM-DAB
30-40-15 12	BL-DAB
30-40-15 12	BM-DAB
32-60-10 04	AD-DAB
32-60-10 04	AE-DAB
32-60-10 04	AF-DAB
32-60-10 04	AG-DAB
32-60-10 04	AH-DAB
32-60-10 04	AN-DAB
34-13-01 04	AD-DAB
34-13-01 04	AL-DAB
34-13-01 04	AM-DAB
34-13-01 08	AD-DAB
34-13-01 08	AL-DAB
34-13-01 08	AM-DAB
49-60-10 05	N-GA
49-60-10 05	P-GA
73-20-01 05	BC-ZK
73-20-02 05	BD-ZK
HDS8SF3J06	
26-10-10 03	AK-DAB
28-41-20 03	GB-DB
28-41-20 03	GC-DB
28-41-20 03	GD-DB
HD58SF2L03	
24-30-10 02	AA-DAB
HE15185-4SN1	
29-32-10 05	QP
29-32-10 05	QQ
HE690011	
21-60-10 08	XQ
21-60-10 08	XR
21-60-10 10	XQ
21-60-10 10	XR
21-60-10 11	XQ
21-60-10 11	XR
HH12N	
23-31-20 52	P626
HSA50-1R8	
33-10-20 04	H-AA
33-10-20 04	H-AB
HSA50-68R	
30-30-20 02	B-DR

PART NUMBER CH-SECT-UNIT-FIG-ITEM	IDENT
HSA50-68R	
30-30-20 02	E-DR
HTE250017	
31-50-05 03	A-UC
HTE60010	
28-40-40 02	P26-M1
28-40-40 02	P26-M2
HTE690009	
28-41-20 03	KAA
HTE690013	
30-20-10 02	LT
30-20-10 02	MT
HTE690014-1	
28-40-20 02	UF
28-40-20 02	UG
HTE900048	
31-50-05 03	UJ
HTE9044-001	
28-41-10 02	D-KL
28-41-10 03	D-KL
28-41-20 03	KBA
28-41-30 02	JEA
28-41-30 02	KEA
HTE9178	
21-20-10 03	FX
21-20-10 03	FY
HWBUN1146D10B	
21-30-10 02	DL
21-30-10 02	E-GG
21-30-10 04	DL
21-30-10 04	E-GG
21-60-10 08	D-GG
21-60-10 08	DL
21-60-10 08	G-GG
21-60-10 08	J-GG
21-60-10 10	D-GG
21-60-10 10	DL
21-60-10 10	G-GG
21-60-10 10	J-GG
21-60-10 11	D-GG
21-60-10 11	DL
21-60-10 11	G-GG
21-60-10 11	J-GG
22-10-40 53	TBPQ
24-21-17 03	G-XZ
24-21-17 03	K-CG
24-21-17 03	N-CG
24-21-17 04	G-XZ
24-21-17 04	K-CG
24-21-17 04	N-CG
24-30-10 02	Q-GG

PART NUMBER CH-SECT-UNIT-FIG-ITEM	IDENT
HWBUN1146D10B	
24-30-20 02	Q-GG
24-30-20 03	Q-GG
24-50-01 05	J-GG
24-50-01 05	PP
24-50-01 06	J-GG
24-50-01 06	PP
24-50-01 07	J-GG
24-50-01 07	PP
24-90-01 05	E-GG
24-90-01 05	G-XZ
24-90-01 06	E-GG
24-90-01 06	G-XZ
26-10-10 03	N-GG
26-10-10 03	RR-BA
26-10-10 03	S-GG
26-10-30 03	C-GG
26-10-30 03	D-GG
26-10-30 03	E-GG
27-00-10 03	DL
27-00-10 03	E-GG
27-00-10 03	G-GG
27-00-10 03	J-GG
27-00-10 04	DL
27-00-10 04	E-GG
27-00-10 04	G-GG
27-00-10 04	J-GG
27-00-10 04	PQ
27-24-10 02	PQ
27-24-10 02	RR-BA
27-24-10 03	PQ
27-24-10 03	RR-BA
27-30-10 07	CQ
27-30-10 07	CR
27-30-10 08	CQ
27-30-10 08	CR
27-33-00 05	CQ
27-33-00 05	CR
27-33-00 07	CQ
27-33-00 07	CR
27-33-00 07	TB-DAJ
27-61-10 03	A-JA
27-61-10 04	A-JA
27-61-10 08	A-JA
28-40-20 02	A-GG
28-40-30 05	A-GG
28-40-30 05	G-GG
28-40-40 02	A-GG
28-40-40 02	G-GG
28-40-40 02	N-GG
28-41-10 02	A-GG

PART NUMBER CH-SECT-UNIT-FIG-ITEM	IDENT
HWBUN1146D10B	
28-41-10 02	A-JA
28-41-10 02	PP
28-41-10 03	A-GG
28-41-10 03	A-JA
28-41-10 03	PP
28-41-20 03	A-JA
28-41-30 02	A-JA
28-42-10 02	RR-BA
30-10-10 11	PQ
30-20-10 02	C-GG
30-20-10 02	E-GG
30-20-10 02	J-GG
30-30-20 02	G-XZ
30-30-20 02	M-GG
30-40-15 07	E-GG
30-40-15 07	L-GG
30-40-15 07	M-GG
30-40-15 10	E-GG
30-40-15 10	L-GG
30-40-15 10	M-GG
30-40-15 11	E-GG
30-40-15 11	L-GG
30-40-15 11	M-GG
30-40-15 12	E-GG
30-40-15 12	L-GG
30-40-15 12	M-GG
30-40-15 12	TB-DAJ
30-40-20 03	L-GG
30-40-20 03	M-GG
30-40-20 03	P-GG
30-40-20 05	L-GG
30-40-20 05	M-GG
30-40-20 05	P-GG
30-40-20 05	TB-DAJ
31-20-35 02	AQ
31-20-35 02	H-GG
31-20-35 03	AQ
31-20-35 03	H-GG
31-50-01 04	TB-DAJ
31-50-01 07	TB-DAJ
31-50-01 08	TB-DAJ
31-50-01 09	TB-DAJ
31-50-01 14	PP
31-50-01 14	SQ
31-50-01 14	TB-DAJ
31-50-05 03	J-ZJ
32-60-10 04	A-JA
32-60-10 04	AQ
32-60-10 04	C-GG
32-60-10 04	G-GG

PART NUMBER CH-SECT-UNIT-FIG-ITEM	IDENT
HWBUN1146D10B	
32-60-10 04	H-GG
32-60-10 04	P-GG
32-60-10 04	PQ
32-60-10 04	R-GG
32-60-10 04	RR-BA
32-60-20 02	A-JA
33-10-05 05	RR-BA
33-10-05 07	RR-BA
33-10-05 08	RR-BA
33-10-05 09	RR-BA
33-10-05 11	RR-BA
33-20-10 10	EF
33-20-10 10	FP
33-30-05 07	A
33-30-05 07	K-JA
33-30-05 07	SQ
33-30-05 07	SR
33-30-05 08	SQ
33-30-15 07	S-GG
33-40-10 05	A-JA
33-40-10 05	PP
33-40-10 06	A-JA
33-40-10 06	PP
33-40-20 04	A-JA
33-50-10 09	SQ
34-13-01 04	A-JA
34-13-01 04	PP
34-13-01 08	K-JA
34-13-01 08	PP
34-13-01 08	PQ
49-60-10 05	AA-GG
49-60-10 05	AD-GG
49-60-10 05	L-TQ
49-60-10 05	N-ZKA
49-60-10 05	P-GG
49-60-10 05	R-GG
49-60-10 05	SN
49-60-10 05	SQ
49-60-10 05	TB-DAM
49-60-10 05	U-GG
49-60-30 06	A-GG
49-60-30 06	J-GG
49-60-30 06	SQ
49-60-30 06	SR
49-60-30 08	A-GG
49-60-30 08	J-GG
49-60-30 08	L-GG
49-60-30 08	SQ
49-60-30 08	SR
49-60-30 09	SQ

PART NUMBER CH-SECT-UNIT-FIG-ITEM	IDENT
HWBUN1146D10B	
49-60-30 09	SR
49-60-30 11	C-GG
49-60-30 11	J-GG
49-60-30 11	L-GG
49-60-30 11	SQ
49-60-30 11	SR
73-20-01 05	A-GG
73-20-01 05	H-GG
73-20-02 05	A-GG
73-20-02 05	E-GG
73-20-02 05	G-GG
73-20-02 05	L-GG
73-20-10 03	A-GG
73-20-10 03	H-GG
73-20-10 03	L-GG
73-20-10 03	SR
77-10-10 02	E-GG
77-10-10 02	H-GG
77-10-10 02	N-GG
77-10-10 02	S-GG
77-20-10 02	J-GG
77-20-10 02	R-GG
78-30-05 01	PQ
78-30-05 01	R-GG
78-30-05 01	S-GG
78-30-05 02	PQ
78-30-05 02	R-GG
78-30-05 02	S-GG
79-30-10 02	C-GG
79-30-10 02	E-GG
79-30-10 02	P-GG
80-10-10 04	A-GG
80-10-10 04	C-GG
80-10-10 04	PP
HWBUN1146D10S	
49-60-10 05	D-ZZ
49-60-10 05	E-ZZ
49-60-10 05	K-ZZ
HWBUN1146D3B	
21-60-10 08	ET
21-60-10 10	ET
21-60-10 11	ET
21-60-20 02	ET
21-60-20 03	ET
HWBUN1146D5B	
27-24-10 02	XA
27-24-10 03	XA
27-61-20 04	RV-BA
28-41-10 02	RR-BA
28-41-10 03	RR-BA

PART NUMBER CH-SECT-UNIT-FIG-ITEM	IDENT
HWBUN1146D5B	
31-50-05 03	K-ZJ
33-10-05 05	TA-AB
33-10-05 07	TA-AB
33-10-05 09	TA-AB
33-10-05 11	TA-AB
33-10-20 04	TA-AA
33-10-20 04	TA-AB
33-10-20 08	TA-AA
33-10-20 08	TA-AB
73-20-01 05	RV-BA
73-20-02 05	RV-BA
78-30-05 01	XA
78-30-05 02	XA
HWBUN1146D58	
21-20-10 03	FW
HWBUN1146S10B	
21-60-20 02	VM2
21-60-20 03	VM-CG
24-21-17 03	BA-ZK
24-21-17 03	CT-ZK
24-21-17 04	BA-ZK
24-21-17 04	CT-ZK
24-30-10 02	CT-ZK
24-30-20 02	BA-ZK
24-30-20 02	CT-ZK
24-30-20 03	BA-ZK
24-30-20 03	CT-ZK
24-50-01 05	BA-ZK
24-50-01 05	CW-ZK
24-50-01 05	VM
24-50-01 06	BA-ZK
24-50-01 06	CW-ZK
24-50-01 06	VM
24-50-01 07	BA-ZK
24-50-01 07	BB-ZK
24-50-01 07	CW-ZK
24-50-01 07	VM
24-90-01 05	BA-ZK
24-90-01 05	BB-ZK
24-90-01 05	VM
24-90-01 06	BA-ZK
24-90-01 06	BB-ZK
24-90-01 06	VM
26-10-10 03	VM
26-20-10 03	VM
27-00-10 03	CW-ZK
27-00-10 04	CW-ZK
30-10-10 11	PU
30-30-20 02	BA-ZK
30-30-20 02	BB-ZK

PART NUMBER CH-SECT-UNIT-FIG-ITEM	IDENT
HWBUN1146S10B	
32-60-30 02	BB-ZK
32-60-30 02	CW-ZK
32-60-30 03	BB-ZK
32-60-30 03	CW-ZK
33-10-05 05	VL-CG
33-10-05 05	VM-CG
33-10-05 07	VL-CG
33-10-05 07	VM-CG
33-10-05 08	VL-CG
33-10-05 08	VM-CG
33-10-05 09	VL-CG
33-10-05 09	VM-CG
33-10-05 11	VL-CG
33-10-05 11	VM-CG
49-60-10 05	BB-ZK
49-60-10 05	CT-ZK
49-60-30 06	BA-ZK
49-60-30 06	BB-ZK
49-60-30 06	CT-ZK
49-60-30 06	TB301
49-60-30 08	BA-ZK
49-60-30 08	BB-ZK
49-60-30 08	CT-ZK
49-60-30 08	TB301
49-60-30 09	BA-ZK
49-60-30 09	BB-ZK
49-60-30 09	CT-ZK
49-60-30 09	TB301
49-60-30 11	BA-ZK
49-60-30 11	BB-ZK
49-60-30 11	CT-ZK
49-60-30 11	TB301
52-70-10 02	PU
73-20-10 03	BA-ZK
80-10-10 04	BA-ZK
80-10-10 04	BB-ZK
80-10-10 04	CT-ZK
80-10-10 04	VM-CG
HWBUN1146S3B	
24-50-05 08	HN-DA
24-50-05 08	HP-DA
24-50-05 11	HN-DA
24-50-05 11	HP-DA
24-50-05 14	HN-DA
24-50-05 14	HP-DA
24-50-05 15	HN-DA
24-50-05 15	HP-DA
27-00-10 03	HW
27-00-10 03	HX
27-00-10 03	JW

PART NUMBER CH-SECT-UNIT-FIG-ITEM	IDENT
HWBUN1146S3B	
27-00-10 04	HW
27-00-10 04	HX
27-00-10 04	JW
28-21-05 02	AA-DA
28-21-05 03	AA-DA
28-21-05 04	AA-DA
32-60-10 04	C-PQ
32-60-10 04	PT
HWBUN1146S5B	
27-00-10 03	HC
27-00-10 04	HC
27-33-00 05	XC
27-33-00 07	XC
28-41-20 03	JU
28-41-20 03	KU
28-41-30 02	JU
28-41-30 02	KU
30-30-10 02	PW
30-30-10 02	PX
30-30-31 02	PW
30-30-31 02	PX
33-40-10 05	HE
33-40-10 06	HE
HWBUN1147S10B	
73-20-02 05	TC
HWBUN1154D5B	
23-31-20 52	FH627-1
23-31-20 52	FH627-2
HWBUN1177S2B	
28-21-05 02	JH
28-21-05 02	KH
28-21-05 03	JH
28-21-05 03	KH
28-21-05 04	JH
28-21-05 04	KH
HWBUN1736D10B	
23-31-20 52	TB628
27-24-10 02	WQ-BA
27-24-10 03	WQ-BA
27-33-00 05	K
27-33-00 07	K
27-33-00 07	TA-DAJ
27-61-10 03	Y-CC
27-61-10 04	Y-CC
28-40-10 04	Y-CC
28-40-10 05	Y-CC
28-41-10 02	TA-DB
28-41-10 02	TB-DB
28-41-10 02	Y-CC
28-41-10 03	TA-DB

PART NUMBER CH-SECT-UNIT-FIG-ITEM	IDENT
HWBUN1736D10B	
28-41-10 03	TB-DB
28-41-10 03	Y-CC
28-41-20 03	TA-DB
28-41-20 03	TB-DB
28-41-30 02	TA-DB
28-41-30 02	TB-DB
30-10-10 11	TC-DAJ
30-30-20 02	K
31-20-35 02	TC-DAJ
31-20-35 02	WQ
31-20-35 03	TC-DAJ
31-20-35 03	WQ
31-20-60 02	Y-CC
31-50-01 04	Y
31-50-01 07	Y
31-50-01 08	Y
31-50-01 09	Y
31-50-01 14	Y
31-50-05 03	Y-CC
32-60-10 04	WQ-BA
32-60-10 04	Y-CC
33-10-05 05	WQ-BA
33-10-05 07	WQ-BA
33-10-05 08	WQ-BA
33-10-05 09	WQ-BA
33-10-05 11	WQ-BA
33-10-10 31	H
33-10-20 04	Y-CC
33-10-20 07	Y-CC
33-10-20 08	Y-CC
33-20-10 10	AP
33-30-05 07	FU
33-30-05 07	TB-DB
33-30-05 08	TB-DB
33-30-15 07	HC
34-13-01 04	TC
34-13-01 08	TC
34-30-10 53	TB182
34-30-20 53	TB182
73-20-02 05	Y-CC
78-30-05 01	WQ-BA
78-30-05 02	WQ-BA
HWBUN1736D5B	
27-30-10 07	A-EP
27-30-10 07	EP
27-30-10 07	RL-BA
27-30-10 08	A-EP
27-30-10 08	EP
27-33-00 05	JD
27-33-00 05	KD

PART NUMBER CH-SECT-UNIT-FIG-ITEM	IDENT
HWBUN1736D5B	
27-33-00 07	JD
27-33-00 07	KD
27-50-10 02	JD
27-61-20 04	A-EP
27-61-20 04	RL-BA
33-30-15 07	PP
33-40-10 05	HP
33-40-10 06	HP
78-30-05 01	HP
78-30-05 01	RL-BA
78-30-05 02	HP
78-30-05 02	RL-BA
HWBUN1736D6B	
21-31-10 07	T-CD
27-33-00 05	T-CA
27-33-00 05	T-CD
27-33-00 07	T-CA
27-33-00 07	T-CD
31-50-01 04	T-CD
31-50-01 07	T-CD
31-50-01 08	T-CD
31-50-01 09	T-CD
31-50-01 14	T-CD
33-10-10 31	T-CA
33-10-10 31	T-CD
33-10-20 04	T-CA
33-10-20 04	T-CD
33-10-20 07	T-CA
33-10-20 07	T-CD
33-10-20 08	T-CA
33-10-20 08	T-CD
HWBUN1736S10B	
31-50-01 04	S-DAE
31-50-01 04	Z-DAE
31-50-01 07	S-DAE
31-50-01 07	Z-DAE
31-50-01 08	S-DAE
31-50-01 08	Z-DAE
31-50-01 09	S-DAE
31-50-01 09	Z-DAE
31-50-01 14	S-DAE
31-50-01 14	Z-DAE
33-10-05 05	S-DAE
33-10-05 05	T-DAE
33-10-05 05	V-DAE
33-10-05 05	W-DAE
33-10-05 05	X-DAE
33-10-05 07	S-DAE
33-10-05 07	T-DAE
33-10-05 07	V-DAE

PART NUMBER CH-SECT-UNIT-FIG-ITEM	IDENT
HWBUN1736S10B	
33-10-05 07	W-DAE
33-10-05 07	X-DAE
33-10-05 08	S-DAE
33-10-05 08	T-DAE
33-10-05 08	V-DAE
33-10-05 08	W-DAE
33-10-05 08	X-DAE
33-10-05 09	S-DAE
33-10-05 09	T-DAE
33-10-05 09	V-DAE
33-10-05 09	W-DAE
33-10-05 09	X-DAE
33-10-05 11	S-DAE
33-10-05 11	T-DAE
33-10-05 11	V-DAE
33-10-05 11	W-DAE
33-10-05 11	X-DAE
33-10-10 31	E-U-DAE
33-10-10 31	E-X-DAE
33-10-20 04	E-S-DAE
33-10-20 04	E-T-DAE
33-10-20 04	E-U-DAE
33-10-20 04	E-Y-DAE
33-10-20 04	S-DAE
33-10-20 04	T-DAE
33-10-20 04	U-DAE
33-10-20 04	Y-DAE
33-10-20 07	E-S-DAE
33-10-20 07	E-T-DAE
33-10-20 07	E-U-DAE
33-10-20 07	E-Y-DAE
33-10-20 07	S-DAE
33-10-20 07	T-DAE
33-10-20 07	U-DAE
33-10-20 07	Y-DAE
33-10-20 08	E-S-DAE
33-10-20 08	E-T-DAE
33-10-20 08	E-U-DAE
33-10-20 08	E-Y-DAE
33-10-20 08	S-DAE
33-10-20 08	T-DAE
33-10-20 08	U-DAE
33-10-20 08	Y-DAE
33-40-10 05	HC
33-40-10 06	HC
77-40-10 02	D-QK
HWBUN1736S5B	
24-53-10 06	XE
24-53-10 06	XS1
24-53-10 06	XS2

PART NUMBER CH-SECT-UNIT-FIG-ITEM	IDENT
HWBUN1736S5B	
24-53-10 08	XE
24-53-10 08	XS1
24-53-10 08	XS2
29-32-10 05	T-DAH
49-60-30 06	B
49-60-30 08	B
49-60-30 09	B
49-60-30 11	B
73-20-10 03	CZ-ZK
78-30-05 01	CTA-BA
78-30-05 02	CTA-BA
HWB1146D10B	
30-80-10 02	TB-DAJ
30-80-10 03	TB-DAJ
HWB1146S10B	
27-33-00 07	PU
HWB1146S3B	
49-60-30 06	TB301A
49-60-30 08	TB301A
49-60-30 09	TB301A
49-60-30 11	TB301A
HWB1736D10B	
24-90-01 05	TA-DAJ
24-90-01 05	TB-DAJ
24-90-01 06	TA-DAJ
24-90-01 06	TB-DAJ
30-30-20 02	TC-DAJ
30-80-10 03	TC-DAJ
H1400	
33-50-10 09	DN
H1800C	
33-10-05 05	JC-DA
33-10-05 07	JC-DA
33-10-05 08	JC-DA
33-10-05 09	JC-DA
33-10-05 11	JC-DA
H1800C1	
33-20-10 10	A-J
33-20-10 10	B-J
33-20-10 10	ST
33-20-10 10	SU
33-30-05 07	DN
33-30-05 07	JZA
33-30-05 08	DN
33-50-10 09	DN
IN4005	
49-60-30 06	B
49-60-30 06	BB-ZK
49-60-30 08	B
49-60-30 08	BB-ZK

PART NUMBER CH-SECT-UNIT-FIG-ITEM	IDENT
IS13247-2	
30-30-31 02	FA-CG
30-30-31 02	FK-CG
JE102BKV	
21-31-10 07	EC-DAJ
21-31-10 07	ED-DAJ
21-31-10 07	EE-DAJ
JS151	
31-50-05 03	B-UC
31-50-05 03	D-UC
KPTM08F10-6S63	
31-20-35 02	ZM
31-20-35 02	ZN
KPT06B14-5S	
33-10-05 11	C-AB
33-10-20 08	A-AA-R
33-10-20 08	A-AB-R
33-10-20 08	C-AA-R
K3RAH3-4	
49-60-10 05	K-ZKA
LC04B	
34-30-10 53	FL212
LDA150A8	
24-50-01 05	T-GA
24-50-01 06	T-GA
24-50-01 07	T-GA
49-60-30 06	T-GA
49-60-30 08	T-GA
49-60-30 09	T-GA
49-60-30 11	T-GA
LDA200B18C	
24-21-17 03	S-GA
24-21-17 03	U-GA
24-21-17 04	S-GA
24-21-17 04	U-GA
LDG150Y4	
24-21-17 03	E-GA
24-21-17 04	E-GA
24-30-10 02	E-GA
24-30-20 02	E-GA
24-30-20 03	E-GA
24-50-01 05	E-GA
24-50-01 06	E-GA
24-50-01 07	E-GA
24-50-05 08	E-GA
24-50-05 11	E-GA
24-50-05 14	E-GA
24-50-05 15	E-GA
49-60-30 06	E-GA
49-60-30 08	E-GA
49-60-30 09	E-GA

PART NUMBER CH-SECT-UNIT-FIG-ITEM	IDENT
LDG150Y4	
49-60-30 11	E-GA
80-10-10 04	E-GA
LHA1BG105-2	
33-31-10 04	QB
LL57L14-19P1-95 *	
51	
28-40-10 04	JZ-P
28-40-10 04	KZ-P
28-40-10 05	JZ-P
28-40-10 05	KZ-P
LPT06F8-33S	
29-32-10 05	QP-R
29-32-10 05	QQ-R
LS10215R12-12SN	
33-10-05 05	C-AB
33-10-05 07	C-AB
33-10-05 08	C-AB
33-10-20 04	A-AA-R
33-10-20 04	A-AB-R
33-10-20 04	C-AA-R
33-10-20 07	A-AA-R
33-10-20 07	A-AB-R
33-10-20 07	C-AA-R
LT52A	
33-10-05 09	C-AB
33-10-05 11	C-AB
33-10-20 08	A-AA
33-10-20 08	A-AB
33-10-20 08	C-AA
L133CA150	
24-21-17 03	F12-GA
24-21-17 03	F22-GA
24-21-17 04	F12-GA
24-21-17 04	F22-GA
24-50-01 05	F12-GA
24-50-01 05	F22-GA
24-50-01 06	F12-GA
24-50-01 06	F22-GA
24-50-01 07	F12-GA
24-50-01 07	F22-GA
L1330	
33-10-20 04	P1-CC
33-10-20 04	P10-CC
33-10-20 04	P2-CC
33-10-20 04	P3-CC
33-10-20 04	P4-CC
33-10-20 04	P5-CC
33-10-20 04	P6-CC
33-10-20 04	P7-CC
33-10-20 04	P8-CC

PART NUMBER CH-SECT-UNIT-FIG-ITEM	IDENT
L1330	
33-10-20 04	P9-CC
L1330A150	
24-50-05 08	F12-GA
24-50-05 08	F22-GA
24-50-05 11	F12-GA
24-50-05 11	F22-GA
24-50-05 14	F12-GA
24-50-05 14	F22-GA
24-50-05 15	F12-GA
24-50-05 15	F22-GA
L1330A325	
49-60-30 06	F7-ZKA
49-60-30 08	F7-ZKA
49-60-30 09	F7-ZKA
49-60-30 11	F7-ZKA
L1330A500	
24-50-01 05	F11-GA
24-50-01 05	F21-GA
24-50-01 06	F11-GA
24-50-01 06	F21-GA
24-50-01 07	F11-GA
24-50-01 07	F21-GA
24-50-05 08	F11-GA
24-50-05 08	F21-GA
24-50-05 11	F11-GA
24-50-05 11	F21-GA
24-50-05 14	F11-GA
24-50-05 14	F21-GA
24-50-05 15	F11-GA
24-50-05 15	F21-GA
L1338	
33-10-05 05	E2B
33-10-05 07	E2B
33-10-05 08	E2B
33-10-05 09	E2B
33-10-05 11	E2B
MAP900-001	
21-60-10 10	XN
21-60-10 10	XP
21-60-10 11	XN
21-60-10 11	XP
MBC004	
33-10-05 05	AA
33-10-05 05	AB
33-10-05 05	AC
33-10-05 05	AD
33-10-05 05	AE
33-10-05 05	AF
33-10-05 05	AG
33-10-05 05	AH

PART NUMBER CH-SECT-UNIT-FIG-ITEM	IDENT
MBC004	
33-10-05 05	AJ
33-10-05 05	AK
33-10-05 05	CW-A
33-10-05 05	CW-B
33-10-05 05	CX-A
33-10-05 05	CX-B
33-10-05 07	AA
33-10-05 07	AB
33-10-05 07	AC
33-10-05 07	AD
33-10-05 07	AE
33-10-05 07	AF
33-10-05 07	AG
33-10-05 07	AH
33-10-05 07	AJ
33-10-05 07	AK
33-10-05 07	CW-A
33-10-05 07	CW-B
33-10-05 07	CX-A
33-10-05 07	CX-B
33-10-05 08	AA
33-10-05 08	AB
33-10-05 08	AC
33-10-05 08	AD
33-10-05 08	AE
33-10-05 08	AF
33-10-05 08	AG
33-10-05 08	AH
33-10-05 08	AJ
33-10-05 08	AK
33-10-05 08	CW-A
33-10-05 08	CW-B
33-10-05 08	CX-A
33-10-05 08	CX-B
33-10-05 09	AA
33-10-05 09	AB
33-10-05 09	AC
33-10-05 09	AD
33-10-05 09	AE
33-10-05 09	AF
33-10-05 09	AG
33-10-05 09	AH
33-10-05 09	AJ
33-10-05 09	AK
33-10-05 09	CW-A
33-10-05 09	CW-B
33-10-05 09	CX-A
33-10-05 09	CX-B
33-10-05 11	AA
33-10-05 11	AB

PART NUMBER CH-SECT-UNIT-FIG-ITEM	IDENT
MBC004	
33-10-05 11	AC
33-10-05 11	AD
33-10-05 11	AE
33-10-05 11	AF
33-10-05 11	AG
33-10-05 11	AH
33-10-05 11	AJ
33-10-05 11	AK
33-10-05 11	CW-A
33-10-05 11	CW-B
33-10-05 11	CX-A
33-10-05 11	CX-B
MBC17	
33-10-05 05	AA
33-10-05 05	AB
33-10-05 05	AC
33-10-05 05	AD
33-10-05 05	AE
33-10-05 05	AF
33-10-05 05	AG
33-10-05 05	AH
33-10-05 05	AJ
33-10-05 05	AK
33-10-05 05	CW-A
33-10-05 05	CW-B
33-10-05 05	CX-A
33-10-05 05	CX-B
33-10-05 07	AA
33-10-05 07	AB
33-10-05 07	AC
33-10-05 07	AD
33-10-05 07	AE
33-10-05 07	AF
33-10-05 07	AG
33-10-05 07	AH
33-10-05 07	AJ
33-10-05 07	AK
33-10-05 07	CW-A
33-10-05 07	CW-B
33-10-05 07	CX-A
33-10-05 07	CX-B
33-10-05 08	AA
33-10-05 08	AB
33-10-05 08	AC
33-10-05 08	AD
33-10-05 08	AE
33-10-05 08	AF
33-10-05 08	AG
33-10-05 08	AH
33-10-05 08	AJ

PART NUMBER CH-SECT-UNIT-FIG-ITEM	IDENT
MBC17	
33-10-05 08	AK
33-10-05 08	CW-A
33-10-05 08	CW-B
33-10-05 08	CX-A
33-10-05 08	CX-B
33-10-05 09	AA
33-10-05 09	AB
33-10-05 09	AC
33-10-05 09	AD
33-10-05 09	AE
33-10-05 09	AF
33-10-05 09	AG
33-10-05 09	AH
33-10-05 09	AJ
33-10-05 09	AK
33-10-05 09	CW-A
33-10-05 09	CW-B
33-10-05 09	CX-A
33-10-05 09	CX-B
33-10-05 11	AA
33-10-05 11	AB
33-10-05 11	AC
33-10-05 11	AD
33-10-05 11	AE
33-10-05 11	AF
33-10-05 11	AG
33-10-05 11	AH
33-10-05 11	AJ
33-10-05 11	AK
33-10-05 11	CW-A
33-10-05 11	CW-B
33-10-05 11	CX-A
33-10-05 11	CX-B
MC11E8-3S	
29-32-10 05	QM-R
MFR4-270RPM1PCT	
30-40-15 07	P-DAG
30-40-15 07	Q-DAG
30-40-15 07	T-DAB
30-40-15 07	U-DAB
30-40-15 10	P-DAG
30-40-15 10	Q-DAG
30-40-15 10	T-DAB
30-40-15 10	U-DAB
30-40-15 11	P-DAG
30-40-15 11	Q-DAG
30-40-15 11	T-DAB
30-40-15 11	U-DAB
30-40-15 12	P-DAG
30-40-15 12	Q-DAG

PART NUMBER CH-SECT-UNIT-FIG-ITEM	IDENT
MFR4-270RPM1PCT	
30-40-15 12	T-DAB
30-40-15 12	U-DAB
MFR5-2K2PM2PCT	
30-40-15 12	Y-DAG
30-40-15 12	Z-DAG
MFR5-2K4PM1PCT	
30-40-15 07	JL-DAG
30-40-15 07	V-DAB
30-40-15 10	JL-DAG
30-40-15 10	V-DAB
30-40-15 11	JL-DAG
30-40-15 11	V-DAB
30-40-15 12	JL-DAG
30-40-15 12	V-DAB
MJE2955	
31-50-01 04	C-Z-DAE
31-50-01 04	D-Z-DAE
31-50-01 04	Z-DAE
31-50-01 07	C-Z-DAE
31-50-01 07	D-Z-DAE
31-50-01 07	Z-DAE
31-50-01 08	C-Z-DAE
31-50-01 08	D-Z-DAE
31-50-01 08	Z-DAE
31-50-01 09	C-Z-DAE
31-50-01 09	D-Z-DAE
31-50-01 09	Z-DAE
31-50-01 14	C-Z-DAE
31-50-01 14	D-Z-DAE
31-50-01 14	Z-DAE
MO5-680R	
33-10-20 04	AN
33-10-20 04	AP
33-10-20 07	AN
33-10-20 07	AP
33-10-20 08	AN
33-10-20 08	AP
MRRB20E04-111	
33-30-15 07	X10-DAB
MRTB16E03	
22-10-40 53	TB124-10
22-10-40 53	TB124-9
23-31-10 58	TB123-18
23-31-10 65	TB123-18
MRTB16E03-111	
27-33-00 05	Y16-DAB
27-33-00 07	Y16-DAB
49-60-30 06	TB6-ZKA
49-60-30 08	TB6-ZKA
49-60-30 09	TB6-ZKA

PART NUMBER CH-SECT-UNIT-FIG-ITEM	IDENT
MRTB16E03-111	
49-60-30 11	TB6-ZKA
MRTB16E04-111	
24-90-01 05	Y5-DAB
24-90-01 06	Y5-DAB
30-30-31 02	Y5-DAB
MRTB20E03	
22-10-40 53	TB120-5
MRTB20E03-784	
27-33-00 05	Y10-DAB
27-33-00 05	Y11-DAB
27-33-00 07	Y10-DAB
27-33-00 07	Y11-DAB
32-60-10 04	Y7-DAB
32-60-10 04	Y9-DAB
73-20-10 03	Y9-DAB
MRTB20E04	
34-30-10 53	TB126-7
MRTB20E04-111	
21-31-10 07	M1-DAG
21-60-10 08	M2-DAG
21-60-10 08	Y4-DAB
21-60-10 10	M2-DAG
21-60-10 10	Y1-DAB
21-60-10 10	Y4-DAB
21-60-10 10	Y6-DAB
21-60-10 11	L4-ZT
21-60-10 11	M2-DAG
21-60-10 11	Y1-DAB
21-60-10 11	Y4-DAB
21-60-10 11	Y6-DAB
24-21-17 03	X8-DAB
24-21-17 04	X8-DAB
24-30-10 02	X13-DAB
24-30-10 02	X14-DAB
24-30-20 02	X13-DAB
24-30-20 02	X14-DAB
24-30-20 03	X13-DAB
24-50-01 05	X13-DAB
24-50-01 06	M1-DAG
24-50-01 06	X13-DAB
24-50-01 07	X13-DAB
24-90-01 05	M1-DAG
24-90-01 05	M2-DAG
24-90-01 05	X10-DAB
24-90-01 05	X11-DAB
24-90-01 05	X12-DAB
24-90-01 05	X13-DAB
24-90-01 05	X14-DAB
24-90-01 05	X15-DAB
24-90-01 05	X8-DAB

PART NUMBER CH-SECT-UNIT-FIG-ITEM	IDENT
MRTB20E04-111	
24-90-01 05	Y1-DAB
24-90-01 05	Y2-DAB
24-90-01 05	Y3-DAB
24-90-01 05	Y4-DAB
24-90-01 06	M1-DAG
24-90-01 06	M2-DAG
24-90-01 06	X10-DAB
24-90-01 06	X11-DAB
24-90-01 06	X12-DAB
24-90-01 06	X13-DAB
24-90-01 06	X14-DAB
24-90-01 06	X15-DAB
24-90-01 06	X8-DAB
24-90-01 06	Y1-DAB
24-90-01 06	Y2-DAB
24-90-01 06	Y3-DAB
24-90-01 06	Y4-DAB
26-10-10 03	Y3-DAB
27-33-00 05	M2-DAG
27-33-00 05	X14-DAB
27-33-00 05	X15-DAB
27-33-00 05	X2-DAB
27-33-00 07	M2-DAG
27-33-00 07	X14-DAB
27-33-00 07	X15-DAB
27-33-00 07	X2-DAB
27-61-10 03	X11-DAB
27-61-10 04	X11-DAB
27-61-10 08	X11-DAB
27-61-10 08	X15-DAB
27-61-20 04	Y6-DAB
28-41-10 03	Y2-DAB
28-41-20 03	Y6-DAB
29-32-10 05	M1-DAG
30-10-10 11	M1-DAG
30-10-10 11	X10-DAB
30-10-10 11	Y3-DAB
30-30-10 02	Y3-DAB
30-30-20 02	Y3-DAJ
30-30-31 02	Y3-DAB
32-60-30 02	X11-DAB
32-60-30 02	Y6-DAB
32-60-30 03	X11-DAB
32-60-30 03	Y6-DAB
33-10-05 05	Y2-DAB
33-10-05 07	Y2-DAB
33-10-05 08	Y2-DAB
33-10-05 09	Y2-DAB
33-10-05 11	Y2-DAB
33-10-20 04	Y2-DAB

PART NUMBER CH-SECT-UNIT-FIG-ITEM	IDENT
MRTB20E04-111	
33-10-20 07	Y2-DAB
33-10-20 08	Y2-DAB
34-13-01 04	X10-DAB
34-13-01 08	X10-DAB
49-60-30 06	TB1-ZKA
49-60-30 06	TB2-ZKA
49-60-30 08	TB1-ZKA
49-60-30 08	TB2-ZKA
49-60-30 09	TB1-ZKA
49-60-30 09	TB2-ZKA
49-60-30 11	TB1-ZKA
49-60-30 11	TB2-ZKA
73-20-10 03	Y2-DAB
MRTB20E057-111	
78-30-05 01	X6-DAB
78-30-05 01	Y15-DAB
78-30-05 02	X6-DAB
78-30-05 02	Y15-DAB
MRTB20E09	
23-31-10 58	TB124-19
23-31-10 58	TB124-20
23-31-10 65	TB124-19
23-31-10 65	TB124-20
34-30-10 53	TB121-14
MRTB20E09-111	
30-40-15 07	M4-DAG
30-40-15 07	M9-DAG
30-40-15 10	M4-DAG
30-40-15 10	M9-DAG
30-40-15 11	M4-DAG
30-40-15 11	M9-DAG
30-40-15 12	M4-DAG
30-40-15 12	M9-DAG
MRTB20E52-724	
27-61-10 08	JTA
27-61-10 08	KTA
MRTB20E57	
34-30-10 53	TB121-3
34-30-10 53	TB121-8
34-30-10 53	TB123-6
34-30-20 53	TB123-7
34-30-20 53	TB127-17
34-30-20 53	TB127-3
34-30-20 53	TB127-9
MRTB20E57-111	
21-30-10 02	Y12-DAB
21-30-10 04	Y12-DAB
21-31-10 07	M5-DAG
21-60-10 08	X4-DAB
21-60-10 08	Y12-DAB

PART NUMBER CH-SECT-UNIT-FIG-ITEM	IDENT
MRTB20E57-111	
21-60-10 08	Y13-DAB
21-60-10 10	X4-DAB
21-60-10 10	Y12-DAB
21-60-10 10	Y13-DAB
21-60-10 11	L1-ZT
21-60-10 11	L2-ZT
21-60-10 11	L3-ZT
21-60-10 11	X4-DAB
21-60-10 11	Y12-DAB
21-60-10 11	Y13-DAB
24-50-01 05	X16-DAB
24-50-01 05	X3-DAB
24-50-01 05	X4-DAB
24-50-01 05	Y14-DAB
24-50-01 06	X16-DAB
24-50-01 06	X3-DAB
24-50-01 06	X4-DAB
24-50-01 06	Y14-DAB
24-50-01 07	X16-DAB
24-50-01 07	X3-DAB
24-50-01 07	X4-DAB
24-50-01 07	Y14-DAB
26-10-10 03	M6-DAG
26-10-10 03	M7-DAG
27-33-00 05	X1-DAB
27-33-00 05	X4-DAB
27-33-00 07	X1-DAB
27-33-00 07	X4-DAB
27-61-10 04	Y15-DAB
27-61-10 08	Y15-DAB
27-61-20 04	X6-DAB
30-10-10 11	Y12-DAB
30-40-15 07	M5-DAG
30-40-15 07	M7-DAG
30-40-15 10	M5-DAG
30-40-15 10	M7-DAG
30-40-15 11	M5-DAG
30-40-15 11	M7-DAG
30-40-15 12	M5-DAG
30-40-15 12	M7-DAG
32-60-10 04	X5-DAB
32-60-10 04	X6-DAB
32-60-10 04	X7-DAB
32-60-10 04	Y13-DAB
32-60-10 04	Y14-DAB
32-60-10 04	Y15-DAB
32-60-30 02	X4-DAB
32-60-30 02	X6-DAB
32-60-30 02	Y12-DAB
32-60-30 02	Y14-DAB

PART NUMBER CH-SECT-UNIT-FIG-ITEM	IDENT
MRTB20E57-111	
32-60-30 03	X4-DAB
32-60-30 03	X6-DAB
32-60-30 03	Y12-DAB
32-60-30 03	Y14-DAB
34-13-01 04	X6-DAB
34-13-01 04	X7-DAB
34-13-01 08	X6-DAB
34-13-01 08	X7-DAB
49-60-30 06	TB3-ZKA
49-60-30 06	TB4-ZKA
49-60-30 08	TB3-ZKA
49-60-30 08	TB4-ZKA
49-60-30 09	TB3-ZKA
49-60-30 09	TB4-ZKA
49-60-30 11	TB3-ZKA
49-60-30 11	TB4-ZKA
73-20-10 03	Y12-DAB
MR1376	
49-60-10 05	X-GA
MR5-680R	
33-10-20 04	AN
33-10-20 04	AP
33-10-20 07	AN
33-10-20 07	AP
33-10-20 08	AN
33-10-20 08	AP
MR5-680RPM1PCT	
30-40-15 07	F-DAB
30-40-15 07	G-DAB
30-40-15 10	F-DAB
30-40-15 10	G-DAB
30-40-15 11	F-DAB
30-40-15 11	G-DAB
30-40-15 12	F-DAB
30-40-15 12	G-DAB
30-40-20 03	D-DAB
30-40-20 03	E-DAB
30-40-20 05	D-DAB
30-40-20 05	E-DAB
MS1417-12N	
49-60-30 06	J3
49-60-30 08	J3
49-60-30 09	J3
49-60-30 11	J3
MS1417-14N	
49-60-30 06	J2
49-60-30 08	J2
49-60-30 09	J2
49-60-30 11	J2
MS24266R128-3S	

PART NUMBER CH-SECT-UNIT-FIG-ITEM	IDENT
MS24266R128-3S	
21-30-10 02	YL
21-30-10 04	YL
21-30-10 04	YL
MS24523-22	
33-31-10 04	QB
MS27212-1	
49-60-30 06	TD
49-60-30 08	TD
49-60-30 09	TD
49-60-30 11	TD
MS3057-16A	
24-30-10 02	A-XZ-R
MS3057-4A	
78-30-05 01	P811
78-30-05 01	P812
78-30-05 02	P811
78-30-05 02	P812
MS3100E10SL4P	
49-60-30 06	J12-P
49-60-30 08	J12-P
49-60-30 09	J12-P
49-60-30 11	J12-P
MS3100E10SL4S	
49-60-30 06	J12-R
49-60-30 08	J12-R
49-60-30 09	J12-R
49-60-30 11	J12-R
MS3102R10SL3P	
33-40-10 05	GL
MS3102R10SL3S	
33-40-10 05	GL
MS3106E24-28S	
49-60-30 06	P8
49-60-30 08	P8
49-60-30 09	P8
49-60-30 11	P8
MS3106R10SL3P	
33-40-10 05	JG
33-40-10 05	KG
33-40-10 06	JG
33-40-10 06	KG
MS3106R10SL3S	
33-40-10 05	JG
33-40-10 05	KG
33-40-10 06	JG
33-40-10 06	KG
MS3106R14S5S	
21-60-10 08	QE
21-60-10 08	QG
21-60-10 10	QE

PART NUMBER CH-SECT-UNIT-FIG-ITEM	IDENT
MS3106R14S5S	
21-60-10 10	QG
21-60-10 11	QE
21-60-10 11	QG
MS3106R14S6SC	
33-40-10 05	SW-P
33-40-10 05	SX-P
33-40-10 05	SY-P
33-40-10 06	SW-P
33-40-10 06	SX-P
33-40-10 06	SY-P
MS3106R16S1S	
49-60-10 05	A-TQ
MS3106R18-9S	
24-21-17 03	TF-P
24-21-17 04	TF-P
MS3108R10SL3S	
21-60-10 08	QH
21-60-10 08	UT
21-60-10 10	QH
21-60-10 10	UT
21-60-10 11	QH
21-60-10 11	UT
78-30-05 01	P811
78-30-05 01	P812
78-30-05 02	P811
78-30-05 02	P812
MS3108R10SL4S	
21-60-10 08	US
21-60-10 08	US
21-60-10 10	US
21-60-10 10	US
21-60-10 11	US
21-60-10 11	US
MS3108R14-5S	
21-60-10 08	GY
21-60-10 08	GZ
21-60-10 08	QJ
21-60-10 10	GY
21-60-10 10	GZ
21-60-10 10	QJ
21-60-10 11	GY
21-60-10 11	GZ
21-60-10 11	QJ
MS3108R24-2P	
24-21-17 03	TM-P
24-21-17 03	TN-P
24-21-17 04	TM-P
24-21-17 04	TN-P
MS3108R24-28SF8 * 0	

PART NUMBER CH-SECT-UNIT-FIG-ITEM	IDENT
MS3108R24-28SF8 *	
0	
49-60-10 05	Y-ZKA
49-60-10 05	Y-ZKA
MS3108810SL4S	
49-60-30 06	G3-AB
49-60-30 08	G3-AB
49-60-30 09	G3-AB
49-60-30 11	G3-AB
MS3120E22-41S	
49-60-30 06	J11-ZKA
49-60-30 08	J11-ZKA
49-60-30 09	J11-ZKA
49-60-30 11	J11-ZKA
MS3120F22-41P	
49-60-30 06	J4
49-60-30 08	J4
49-60-30 09	J4
49-60-30 11	J4
MS3120F22-41SW	
33-40-10 06	PR4-R
MS3126E10-6S	
21-60-10 08	SL
21-60-10 10	SL
21-60-10 11	SL
MS3126E22-41P	
49-60-30 06	J10-ZKA
49-60-30 08	J10-ZKA
49-60-30 09	J10-ZKA
49-60-30 11	J10-ZKA
MS3126E22-41S	
49-60-30 06	J9
49-60-30 08	J9
49-60-30 09	J9
49-60-30 11	J9
MS3126E8-4S	
24-21-17 03	TM-R
24-21-17 03	TN-R
24-21-17 04	TM-R
24-21-17 04	TN-R
MS3126F12-10S	
78-30-05 01	P807
78-30-05 01	P808
78-30-05 02	P807
78-30-05 02	P808
MS3126F14-19S	
78-30-05 01	P803
78-30-05 02	P803
MS3126F22-41PW	
33-40-10 06	PR4-P
MS3126F8-3S	

PART NUMBER CH-SECT-UNIT-FIG-ITEM	IDENT
MS3126F8-3S	
21-60-10 08	XN
21-60-10 08	XP
21-60-10 10	XN
21-60-10 10	XN
21-60-10 10	XP
21-60-10 10	XP
21-60-10 11	XN
21-60-10 11	XN
21-60-10 11	XP
21-60-10 11	XP
24-30-10 02	A-XZ-R
24-30-10 02	LA-R
49-60-10 05	K-TQ
49-60-10 05	K-TQ
MS3152-08	
28-41-10 03	UW-P
28-41-10 03	UW-R
28-41-10 03	UX-P
28-41-10 03	UX-R
MS3152-14	
31-50-05 03	UK-R
31-50-05 03	UL-R
77-20-10 02	V-CC-R
77-20-10 02	W-CC-R
MS3152R10	
30-20-10 02	LT
30-20-10 02	MT
MS3154-16	
27-33-00 05	CM-R
27-33-00 07	CM-R
MS3417-08N	
77-20-10 02	J2-TA4
77-20-10 02	J2-TB4
MS3417-12N	
31-50-05 03	UJ
MS3417-14N	
26-10-10 03	LM
26-10-10 03	MM
26-10-10 03	TA7-P
26-10-10 03	TA7-R
26-10-10 03	TB7-P
26-10-10 03	TB7-R
31-50-05 03	UK-P
31-50-05 03	UL-P
MS3450KT14S5S	
26-10-10 03	TA7-R
26-10-10 03	TB7-R
80-10-10 04	J14-TA1
80-10-10 04	J14-TB1
MS3450L10SL3S	

PART NUMBER CH-SECT-UNIT-FIG-ITEM	IDENT
MS3450L10SL3S	
49-60-30 06	G2-CAB
49-60-30 08	G2-CAB
49-60-30 09	G2-CAB
49-60-30 11	G2-CAB
MS3455L10SL3S	
49-60-30 06	IGN-BA
49-60-30 08	IGN-BA
49-60-30 09	IGN-BA
49-60-30 11	IGN-BA
MS3456KT14S5P	
26-10-10 03	TA7-P
26-10-10 03	TB7-P
MS3456KT14S5S	
26-10-10 03	LM
26-10-10 03	MM
MS3456L10SL3S	
30-20-10 02	LT
30-20-10 02	MT
49-60-30 06	IGN
49-60-30 06	L2-BA
49-60-30 08	L2-BA
49-60-30 09	L2-BA
49-60-30 11	L2-BA
MS3456L10SL3SN	
33-40-10 05	GM-P
33-40-10 06	GM-P
MS3456L10SL4S	
49-60-30 06	G1-AB
49-60-30 06	L1-AB
49-60-30 06	L3-AB
49-60-30 06	L4-AB
49-60-30 08	G1-AB
49-60-30 08	L1-AB
49-60-30 08	L3-AB
49-60-30 08	L4-AB
49-60-30 09	G1-AB
49-60-30 09	L1-AB
49-60-30 09	L3-AB
49-60-30 09	L4-AB
49-60-30 11	G1-AB
49-60-30 11	L1-AB
49-60-30 11	L3-AB
49-60-30 11	L4-AB
MS3456L10SL4SN	
31-50-05 03	UH
MS34676-12-10S	
49-60-30 06	J3
49-60-30 08	J3
49-60-30 09	J3
49-60-30 11	J3

PART NUMBER CH-SECT-UNIT-FIG-ITEM	IDENT
MS3470L08-33SN	
28-41-10 03	UW-R
28-41-10 03	UX-R
MS3470L14-19SN	
30-30-20 02	CS-R
30-30-20 02	CU-R
31-50-05 03	UK-R
MS3470L14-19SW	
31-50-05 03	UL-R
MS3470L16-26SN	
27-33-00 05	CM-R
27-33-00 07	CM-R
MS3476L08-33PN	
28-41-10 03	UW-P
28-41-10 03	UX-P
MS3476L12-10S	
31-50-05 03	UJ
MS3476L14-12SN	
30-30-20 02	A-CN-R
30-30-20 02	B-CN-R
MS3476L14-19PN	
31-50-05 03	UK-P
MS3476L14-19PW	
31-50-05 03	UL-P
MS3476L14-19S	
49-60-30 06	J2
49-60-30 08	J2
49-60-30 09	J2
49-60-30 11	J2
MS3476L14-19SW	
77-20-10 02	V-CC-R
77-20-10 02	W-CC-R
MS3476L16-26P	
49-60-30 06	J1
49-60-30 08	J1
49-60-30 09	J1-P
49-60-30 11	J1
MTCR101-04P	
33-40-10 05	CGG-P
33-40-10 06	CGG-P
MTCR101-04S	
21-20-10 03	CG11-R
21-20-10 03	DA23-R
24-21-17 03	DA12-R
24-21-17 03	DA40-R
24-21-17 03	DA41-R
24-21-17 04	DA12-R
24-21-17 04	DA40-R
24-21-17 04	DA41-R
27-33-00 05	DA40-R
27-33-00 05	DA41-R

PART NUMBER CH-SECT-UNIT-FIG-ITEM	IDENT
MTCR101-04S	
27-33-00 07	DA40-R
27-33-00 07	DA41-R
30-30-10 02	DA23-R
30-30-10 02	DA37-R
30-30-31 02	CG11-R
30-30-31 02	DA22-R
30-30-31 02	DA23-R
30-30-31 02	DA36-R
30-30-31 02	DA37-R
30-40-15 07	DA10-R
30-40-15 07	DA11-R
30-40-15 07	DA44-R
30-40-15 07	DA45-R
30-40-15 10	DA10-R
30-40-15 10	DA11-R
30-40-15 10	DA44-R
30-40-15 10	DA45-R
30-40-15 11	DA10-R
30-40-15 11	DA11-R
30-40-15 11	DA44-R
30-40-15 11	DA45-R
30-40-15 12	DA10-R
30-40-15 12	DA11-R
30-40-15 12	DA44-R
30-40-15 12	DA45-R
30-40-20 03	DA12-R
30-40-20 03	DA13-R
30-40-20 05	DA12-R
30-40-20 05	DA13-R
33-10-05 05	CG10-R
33-10-05 07	CG10-R
33-10-05 08	CG10-R
33-10-05 09	CG10-R
33-10-05 11	CG10-R
33-40-10 05	CG10-R
33-40-10 05	CG9-R
33-40-10 05	DA22-R
33-40-10 05	DA23-R
33-40-10 06	CG10-R
33-40-10 06	CG9-R
33-40-10 06	DA22-R
33-40-10 06	DA23-R
49-60-30 06	DA38-R
49-60-30 06	DA39-R
49-60-30 08	DA38-R
49-60-30 08	DA39-R
49-60-30 09	DA38-R
49-60-30 09	DA39-R
49-60-30 11	DA38-R
49-60-30 11	DA39-R

PART NUMBER CH-SECT-UNIT-FIG-ITEM	IDENT
MTCR101-04S	
80-10-10 04	CG11-R
80-10-10 04	CG8-R
80-10-10 04	CG9-R
MTCR10104S	
27-30-10 07	DA36-R
27-30-10 07	DA37-R
27-30-10 08	DA36-R
27-30-10 08	DA37-R
MTCR161-04P	
21-20-10 03	CG11-P
21-20-10 03	DA23-P
22-10-40 53	J279A
22-10-40 53	J279B
24-21-17 03	DA12-P
24-21-17 03	DA40-P
24-21-17 03	DA41-P
24-21-17 04	DA12-P
24-21-17 04	DA40-P
24-21-17 04	DA41-P
27-33-00 05	DA40-P
27-33-00 05	DA41-P
27-33-00 07	DA40-P
27-33-00 07	DA41-P
30-30-10 02	DA23-P
30-30-10 02	DA37-P
30-30-31 02	CG11-P
30-30-31 02	DA22-P
30-30-31 02	DA23-P
30-30-31 02	DA36-P
30-30-31 02	DA37-P
30-40-15 07	DA10-P
30-40-15 07	DA11-P
30-40-15 07	DA44-P
30-40-15 07	DA45-P
30-40-15 10	DA10-P
30-40-15 10	DA11-P
30-40-15 10	DA44-P
30-40-15 10	DA45-P
30-40-15 11	DA10-P
30-40-15 11	DA11-P
30-40-15 11	DA44-P
30-40-15 11	DA45-P
30-40-15 12	DA10-P
30-40-15 12	DA11-P
30-40-15 12	DA44-P
30-40-15 12	DA45-P
30-40-20 03	DA12-P
30-40-20 03	DA13-P
30-40-20 05	DA12-P
30-40-20 05	DA13-P

PART NUMBER CH-SECT-UNIT-FIG-ITEM	IDENT
MTCR161-04P	
33-10-05 05	CG10-P
33-10-05 07	CG10-P
33-10-05 08	CG10-P
33-10-05 09	CG10-P
33-10-05 11	CG10-P
33-40-10 05	CG10-P
33-40-10 05	CG9-P
33-40-10 05	DA22-P
33-40-10 05	DA23-P
33-40-10 06	CG10-P
33-40-10 06	CG9-P
33-40-10 06	DA22-P
33-40-10 06	DA23-P
49-60-10 05	DHF-R
49-60-30 06	DA38-P
49-60-30 06	DA39-P
49-60-30 08	DA38-P
49-60-30 08	DA39-P
49-60-30 09	DA38-P
49-60-30 09	DA39-P
49-60-30 11	DA38-P
49-60-30 11	DA39-P
80-10-10 04	CG11-P
80-10-10 04	CG8-P
80-10-10 04	CG9-P
MTCR161-04S	
22-10-40 53	P279A
22-10-40 53	P279B
33-40-10 05	CGG-R
33-40-10 06	CGG-R
49-60-10 05	DHF-P
MTCR16104P	
27-30-10 07	DA36-P
27-30-10 07	DA37-P
27-30-10 08	DA36-P
27-30-10 08	DA37-P
MTCX1X100-100	
21-30-10 02	CG3-P
21-30-10 02	CG3-R
21-60-20 02	CG3-P
21-60-20 02	CG3-R
21-60-20 03	CG3-P
21-60-20 03	CG3-R
24-21-17 03	CG3-P
24-21-17 03	CG3-R
24-21-17 04	CG3-P
24-21-17 04	CG3-R
24-30-20 02	DA18-P
24-30-20 02	DA18-R
24-30-20 03	DA18-P

PART NUMBER CH-SECT-UNIT-FIG-ITEM	IDENT
MTCX1X100-100	
24-30-20 03	DA18-R
26-10-30 03	DA17-P
26-10-30 03	DA17-R
26-10-30 03	DA18-P
26-10-30 03	DA18-R
27-24-10 02	CG3-P
27-24-10 02	CG3-R
27-24-10 03	CG3-P
27-24-10 03	CG3-R
27-33-00 05	DA7-P
27-33-00 05	DA7-R
27-33-00 07	DA7-P
27-33-00 07	DA7-R
27-61-20 04	DA7-P
27-61-20 04	DA7-R
28-41-20 03	DA7-P
28-41-20 03	DA7-R
30-40-20 03	DA9-P
30-40-20 03	DA9-R
30-40-20 05	DA9-P
30-40-20 05	DA9-R
31-50-01 04	DA17-P
31-50-01 04	DA17-R
31-50-01 04	DA18-P
31-50-01 04	DA18-R
31-50-01 04	DA30-P
31-50-01 04	DA30-R
31-50-01 07	DA17-P
31-50-01 07	DA17-R
31-50-01 07	DA18-P
31-50-01 07	DA18-R
31-50-01 07	DA30-P
31-50-01 07	DA30-R
31-50-01 08	DA17-P
31-50-01 08	DA17-R
31-50-01 08	DA18-P
31-50-01 08	DA18-R
31-50-01 08	DA30-P
31-50-01 08	DA30-R
31-50-01 08	DA50-P
31-50-01 08	DA50-R
31-50-01 09	DA17-P
31-50-01 09	DA17-R
31-50-01 09	DA18-P
31-50-01 09	DA18-R
31-50-01 09	DA30-P
31-50-01 09	DA30-R
31-50-01 14	DA17-P
31-50-01 14	DA17-R
31-50-01 14	DA18-P

PART NUMBER CH-SECT-UNIT-FIG-ITEM	IDENT
MTCX1X100-100	
31-50-01 14	DA18-R
31-50-01 14	DA30-P
31-50-01 14	DA30-R
31-50-05 03	DA17-P
31-50-05 03	DA17-R
31-50-05 03	DA50-P
31-50-05 03	DA50-R
33-10-05 05	DA9-P
33-10-05 05	DA9-R
33-10-05 07	DA9-P
33-10-05 07	DA9-R
33-10-05 08	DA9-P
33-10-05 08	DA9-R
33-10-05 09	DA9-P
33-10-05 09	DA9-R
33-10-05 11	DA9-P
33-10-05 11	DA9-R
33-10-20 04	DA9-P
33-10-20 04	DA9-R
33-10-20 07	DA9-P
33-10-20 07	DA9-R
33-10-20 08	DA9-P
33-10-20 08	DA9-R
34-13-01 04	DA7-P
34-13-01 04	DA7-R
34-13-01 08	DA7-P
34-13-01 08	DA7-R
73-20-02 05	DA18-P
73-20-02 05	DA18-R
78-30-05 01	DA51-P
78-30-05 01	DA51-R
78-30-05 02	DA51-P
78-30-05 02	DA51-R
MTCX2X200-X200	
33-10-05 05	SC-R
33-10-05 07	SC-R
33-10-05 08	SC-R
33-10-05 09	SC-R
33-10-05 11	SC-R
MTCX2X200-200	
26-10-10 03	SC-P
26-10-10 03	SC-R
27-33-00 05	SC-P
27-33-00 05	SC-R
27-33-00 07	SC-P
27-33-00 07	SC-R
30-30-20 02	SC-P
30-30-20 02	SC-R
33-10-05 05	SC-P
33-10-05 07	SC-P

PART NUMBER CH-SECT-UNIT-FIG-ITEM	IDENT
MTCX2X200-200	
33-10-05 08	SC-P
33-10-05 09	SC-P
33-10-05 11	SC-P
33-30-05 08	SC-P
33-30-05 08	SC-R
MTC100KTI-1102	
27-33-00 05	DA1-P
27-33-00 05	DA16-P
27-33-00 05	DA2-P
27-33-00 05	DA42-P
27-33-00 05	DA43-P
27-33-00 05	DA46-P
27-33-00 05	DA47-P
27-33-00 07	DA1-P
27-33-00 07	DA16-P
27-33-00 07	DA2-P
27-33-00 07	DA42-P
27-33-00 07	DA43-P
27-33-00 07	DA46-P
27-33-00 07	DA47-P
27-61-20 04	CG4-P
29-31-10 02	DA16-P
29-32-10 05	DA14-R
29-32-10 05	DA28-P
29-32-10 05	DA29-P
30-30-20 02	DA1-P
30-30-20 02	DA2-P
30-30-20 02	DA3-P
30-30-20 02	DA42-P
30-30-20 02	DA8-P
30-30-20 02	DA9-P
31-20-60 02	DA14-P
32-60-10 04	DA29-P
32-60-10 04	DA3-P
32-60-10 04	DA7-P
33-40-20 04	E-CG-R
33-40-20 04	F-CG-R
33-40-30 03	CGE-R
73-20-01 05	DA14-P
73-20-01 05	DHC-P
73-20-02 05	CG4-P
MTC100KTI-1104	
73-20-01 05	DA14-R
73-20-01 05	DHC-R
MTC100KTI-1101	
21-20-10 03	DA47-P
21-30-10 02	CG3-P
21-30-10 02	DA29-P
21-30-10 04	DA2-P
21-30-10 04	DA29-P

PART NUMBER CH-SECT-UNIT-FIG-ITEM	IDENT
MTC100KT1-1101	
21-60-10 08	CG4-P
21-60-10 08	CG5-P
21-60-10 08	DA2-P
21-60-10 08	DH-C-R
21-60-10 10	CG4-P
21-60-10 10	CG5-P
21-60-10 10	DA2-P
21-60-10 10	DH-C-R
21-60-10 11	CG4-P
21-60-10 11	CG5-P
21-60-10 11	DA2-P
21-60-10 11	DH-C-R
21-60-20 02	CG3-P
21-60-20 03	CG3-P
22-10-40 53	J280A
24-21-17 03	CG3-P
24-21-17 03	CG5-P
24-21-17 03	DA14-P
24-21-17 03	DA15-P
24-21-17 03	DA3-P
24-21-17 04	CG3-P
24-21-17 04	CG5-P
24-21-17 04	DA14-P
24-21-17 04	DA15-P
24-21-17 04	DA3-P
24-30-10 02	DA1-P
24-30-10 02	DA14-P
24-30-10 02	DA3-P
24-30-20 02	CG5-P
24-30-20 02	DA18-P
24-30-20 02	DA2-P
24-30-20 03	CG5-P
24-30-20 03	DA18-P
24-30-20 03	DA2-P
24-50-01 05	DA1-P
24-50-01 05	DA14-P
24-50-01 05	DA15-P
24-50-01 05	DA29-P
24-50-01 05	DA3-P
24-50-01 06	DA1-P
24-50-01 06	DA14-P
24-50-01 06	DA15-P
24-50-01 06	DA29-P
24-50-01 06	DA3-P
24-50-01 07	DA1-P
24-50-01 07	DA14-P
24-50-01 07	DA15-P
24-50-01 07	DA29-P
24-50-01 07	DA3-P
26-10-10 03	DA28-P

PART NUMBER CH-SECT-UNIT-FIG-ITEM	IDENT
MTC100KT1-1101	
26-10-10 03	DA29-P
26-10-10 03	DA46-P
26-10-10 03	F-CG-R
26-10-20 02	DA16-P
26-10-30 03	CG4-P
26-10-30 03	DA15-P
26-10-30 03	DA17-P
26-10-30 03	DA18-P
26-20-10 03	CG5-P
26-20-10 03	E-CG-R
26-20-10 03	F-CG-R
27-24-10 02	CG3-P
27-24-10 02	DA16-P
27-24-10 02	DA47-P
27-24-10 03	CG3-P
27-24-10 03	DA16-P
27-24-10 03	DA47-P
27-33-00 05	DA1-P
27-33-00 05	DA16-P
27-33-00 05	DA2-P
27-33-00 05	DA42-P
27-33-00 05	DA43-P
27-33-00 05	DA46-P
27-33-00 05	DA47-P
27-33-00 05	DA7-P
27-33-00 07	DA1-P
27-33-00 07	DA16-P
27-33-00 07	DA2-P
27-33-00 07	DA42-P
27-33-00 07	DA43-P
27-33-00 07	DA46-P
27-33-00 07	DA47-P
27-33-00 07	DA7-P
27-61-10 03	DA3-P
27-61-10 04	DA3-P
27-61-20 04	CG4-P
27-61-20 04	DA7-P
28-21-05 02	CG4-P
28-21-05 02	CG5-P
28-21-05 02	DA1-P
28-21-05 02	DA2-P
28-21-05 03	CG4-P
28-21-05 03	CG5-P
28-21-05 03	DA1-P
28-21-05 03	DA19-P
28-21-05 03	DA2-P
28-21-05 03	GG5-P
28-21-05 04	CG4-P
28-21-05 04	CG5-P
28-21-05 04	DA1-P

PART NUMBER CH-SECT-UNIT-FIG-ITEM	IDENT
MTC100KT1-1101	
28-21-05 04	DA2-P
28-40-20 02	DA14-P
28-40-20 02	DA15-P
28-40-40 02	DA14-P
28-40-40 02	DA15-P
28-41-10 02	DA16-P
28-41-10 02	DA43-P
28-41-10 03	DA16-P
28-41-10 03	DA43-P
28-41-20 03	DA16-P
28-41-20 03	DA43-P
28-41-20 03	DA7-P
28-42-10 02	DA16-P
29-31-10 02	DA16-P
29-32-10 05	DA14-R
29-32-10 05	DA28-P
29-32-10 05	DA29-P
30-10-10 11	DA42-P
30-10-10 11	DA46-P
30-10-10 11	DA47-P
30-20-10 02	DA14-P
30-20-10 02	DA15-P
30-20-10 02	DA28-P
30-20-10 02	DA29-P
30-30-20 02	DA1-P
30-30-20 02	DA2-P
30-30-20 02	DA3-P
30-30-20 02	DA42-P
30-30-20 02	DA8-P
30-30-20 02	DA9-P
30-40-15 07	DA16-P
30-40-15 10	DA16-P
30-40-15 11	DA16-P
30-40-15 12	DA16-P
30-40-20 03	DA8-P
30-40-20 05	DA8-P
30-80-10 02	DA1-P
30-80-10 02	DA8-P
30-80-10 03	DA1-P
30-80-10 03	DA8-P
31-20-60 02	DA14-P
31-50-01 04	DA14-P
31-50-01 04	DA15-P
31-50-01 04	DA16-P
31-50-01 04	DA17-P
31-50-01 04	DA18-P
31-50-01 04	DA24-P
31-50-01 04	DA25-P
31-50-01 04	DA26-P
31-50-01 04	DA27-P

PART NUMBER CH-SECT-UNIT-FIG-ITEM	IDENT
MTC100KT1-1101	
31-50-01 04	DA30-P
31-50-01 07	DA14-P
31-50-01 07	DA15-P
31-50-01 07	DA16-P
31-50-01 07	DA17-P
31-50-01 07	DA18-P
31-50-01 07	DA24-P
31-50-01 07	DA25-P
31-50-01 07	DA26-P
31-50-01 07	DA27-P
31-50-01 07	DA30-P
31-50-01 08	DA14-P
31-50-01 08	DA15-P
31-50-01 08	DA16-P
31-50-01 08	DA17-P
31-50-01 08	DA18-P
31-50-01 08	DA24-P
31-50-01 08	DA25-P
31-50-01 08	DA26-P
31-50-01 08	DA27-P
31-50-01 08	DA30-P
31-50-01 08	DA50-P
31-50-01 09	DA14-P
31-50-01 09	DA15-P
31-50-01 09	DA16-P
31-50-01 09	DA17-P
31-50-01 09	DA18-P
31-50-01 09	DA24-P
31-50-01 09	DA25-P
31-50-01 09	DA26-P
31-50-01 09	DA27-P
31-50-01 09	DA30-P
31-50-01 14	DA14-P
31-50-01 14	DA15-P
31-50-01 14	DA16-P
31-50-01 14	DA17-P
31-50-01 14	DA18-P
31-50-01 14	DA24-P
31-50-01 14	DA25-P
31-50-01 14	DA26-P
31-50-01 14	DA27-P
31-50-01 14	DA30-P
31-50-05 03	DA17-P
31-50-05 03	DA50-P
32-60-10 04	DA29-P
32-60-10 04	DA3-P
32-60-10 04	DA7-P
32-60-30 02	DA28-P
32-60-30 02	DA46-P
32-60-30 02	DA47-P

PART NUMBER CH-SECT-UNIT-FIG-ITEM	IDENT
MTC100KT1-1101	
32-60-30 03	DA28-P
32-60-30 03	DA46-P
32-60-30 03	DA47-P
33-10-05 05	DA1-P
33-10-05 05	DA2-P
33-10-05 05	DA46-P
33-10-05 05	DA47-P
33-10-05 07	DA1-P
33-10-05 07	DA2-P
33-10-05 07	DA46-P
33-10-05 07	DA47-P
33-10-05 08	DA1-P
33-10-05 08	DA2-P
33-10-05 08	DA46-P
33-10-05 08	DA47-P
33-10-05 09	DA1-P
33-10-05 09	DA2-P
33-10-05 09	DA46-P
33-10-05 09	DA47-P
33-10-05 11	DA1-P
33-10-05 11	DA2-P
33-10-05 11	DA46-P
33-10-05 11	DA47-P
33-10-10 31	DA50-P
33-10-20 04	DA46-P
33-10-20 04	DA47-P
33-10-20 04	DA8-P
33-10-20 07	DA46-P
33-10-20 07	DA47-P
33-10-20 07	DA8-P
33-10-20 08	DA46-P
33-10-20 08	DA47-P
33-10-20 08	DA8-P
33-30-05 07	DA28-P
33-30-05 07	DA32-P
33-30-05 08	DA28-P
33-30-05 08	DA32-P
33-30-15 07	CGE-R
33-40-10 05	CGF-R
33-40-20 04	E-CG-R
33-40-20 04	F-CG-R
33-40-30 03	CGE-R
34-13-01 04	DA2-P
34-13-01 04	DA7-P
34-13-01 08	DA2-P
34-13-01 08	DA7-P
34-30-10 53	J115A
34-30-20 53	J116A
49-60-30 06	DA16-P
49-60-30 08	DA16-P

PART NUMBER CH-SECT-UNIT-FIG-ITEM	IDENT
MTC100KT1-1101	
49-60-30 09	DA16-P
49-60-30 11	DA16-P
52-70-10 02	DA16-P
73-20-01 05	DA14-P
73-20-01 05	DHC-P
73-20-02 05	CG4-P
73-20-02 05	CG5-P
73-20-02 05	DA18-P
73-20-02 05	DHC-R
73-20-10 03	CG5-P
73-20-10 03	DA1-P
73-20-10 03	DA2-P
73-20-10 03	DA3-P
73-20-10 03	DA46-P
78-30-05 01	DA51-P
78-30-05 02	DA51-P
79-30-10 02	DA14-P
79-30-10 02	DA15-P
80-10-10 04	DA24-P
MTC100KT1-1102	
21-20-10 03	DA47-P
21-30-10 02	DA29-P
21-30-10 04	DA2-P
21-30-10 04	DA29-P
21-60-10 08	CG4-P
21-60-10 08	CG5-P
21-60-10 08	DA2-P
21-60-10 08	DH-C-R
21-60-10 10	CG4-P
21-60-10 10	CG5-P
21-60-10 10	DA2-P
21-60-10 10	DH-C-R
21-60-10 11	CG4-P
21-60-10 11	CG5-P
21-60-10 11	DA2-P
21-60-10 11	DH-C-R
22-10-40 53	J280A
24-21-17 03	CG5-P
24-21-17 03	DA14-P
24-21-17 03	DA15-P
24-21-17 03	DA3-P
24-21-17 04	CG5-P
24-21-17 04	DA14-P
24-21-17 04	DA15-P
24-21-17 04	DA3-P
24-30-10 02	DA1-P
24-30-10 02	DA14-P
24-30-10 02	DA3-P
24-30-20 02	CG5-P
24-30-20 02	DA2-P

PART NUMBER CH-SECT-UNIT-FIG-ITEM	IDENT
MTC100KT1-1102	
24-30-20 03	CG5-P
24-30-20 03	DA2-P
24-50-01 05	DA1-P
24-50-01 05	DA14-P
24-50-01 05	DA15-P
24-50-01 05	DA29-P
24-50-01 05	DA3-P
24-50-01 06	DA1-P
24-50-01 06	DA14-P
24-50-01 06	DA15-P
24-50-01 06	DA29-P
24-50-01 06	DA3-P
24-50-01 07	DA1-P
24-50-01 07	DA14-P
24-50-01 07	DA15-P
24-50-01 07	DA29-P
24-50-01 07	DA3-P
26-10-10 03	DA28-P
26-10-10 03	DA29-P
26-10-10 03	DA46-P
26-10-10 03	F-CG-R
26-10-20 02	DA16-P
26-10-30 03	CG4-P
26-10-30 03	DA15-P
26-20-10 03	E-CG-R
26-20-10 03	F-CG-R
27-24-10 02	DA16-P
27-24-10 02	DA47-P
27-24-10 03	DA16-P
27-24-10 03	DA47-P
27-61-10 03	DA3-P
27-61-10 04	DA3-P
28-21-05 02	CG4-P
28-21-05 02	CG5-P
28-21-05 02	DA1-P
28-21-05 02	DA2-P
28-21-05 03	CG4-P
28-21-05 03	CG5-P
28-21-05 03	DA1-P
28-21-05 03	DA19-P
28-21-05 03	DA2-P
28-21-05 03	GG5-P
28-21-05 04	CG4-P
28-21-05 04	CG5-P
28-21-05 04	DA1-P
28-21-05 04	DA2-P
28-40-20 02	DA14-P
28-40-20 02	DA15-P
28-40-40 02	DA14-P
28-40-40 02	DA15-P

PART NUMBER CH-SECT-UNIT-FIG-ITEM	IDENT
MTC100KT1-1102	
28-41-10 02	DA16-P
28-41-10 02	DA43-P
28-41-10 03	DA16-P
28-41-10 03	DA43-P
28-41-20 03	DA16-P
28-41-20 03	DA43-P
28-42-10 02	DA16-P
30-10-10 11	DA42-P
30-10-10 11	DA46-P
30-10-10 11	DA47-P
30-20-10 02	DA14-P
30-20-10 02	DA15-P
30-20-10 02	DA28-P
30-20-10 02	DA29-P
30-40-15 07	DA16-P
30-40-15 10	DA16-P
30-40-15 11	DA16-P
30-40-15 12	DA16-P
30-40-20 03	DA8-P
30-40-20 03	DA9-P
30-40-20 05	DA8-P
30-40-20 05	DA9-P
30-80-10 02	DA1-P
30-80-10 02	DA8-P
30-80-10 03	DA1-P
30-80-10 03	DA8-P
31-50-01 04	DA14-P
31-50-01 04	DA15-P
31-50-01 04	DA16-P
31-50-01 04	DA24-P
31-50-01 04	DA25-P
31-50-01 04	DA26-P
31-50-01 04	DA27-P
31-50-01 07	DA14-P
31-50-01 07	DA15-P
31-50-01 07	DA16-P
31-50-01 07	DA24-P
31-50-01 07	DA25-P
31-50-01 07	DA26-P
31-50-01 07	DA27-P
31-50-01 08	DA14-P
31-50-01 08	DA15-P
31-50-01 08	DA16-P
31-50-01 08	DA24-P
31-50-01 08	DA25-P
31-50-01 08	DA26-P
31-50-01 08	DA27-P
31-50-01 09	DA14-P
31-50-01 09	DA15-P
31-50-01 09	DA16-P

PART NUMBER CH-SECT-UNIT-FIG-ITEM	IDENT
MTC100KT1-1102	
31-50-01 09	DA24-P
31-50-01 09	DA25-P
31-50-01 09	DA26-P
31-50-01 09	DA27-P
31-50-01 14	DA14-P
31-50-01 14	DA15-P
31-50-01 14	DA16-P
31-50-01 14	DA24-P
31-50-01 14	DA25-P
31-50-01 14	DA26-P
31-50-01 14	DA27-P
32-60-30 02	DA28-P
32-60-30 02	DA46-P
32-60-30 02	DA47-P
32-60-30 03	DA28-P
32-60-30 03	DA46-P
32-60-30 03	DA47-P
33-10-05 05	DA1-P
33-10-05 05	DA2-P
33-10-05 05	DA46-P
33-10-05 05	DA47-P
33-10-05 05	DA9-P
33-10-05 07	DA1-P
33-10-05 07	DA2-P
33-10-05 07	DA46-P
33-10-05 07	DA47-P
33-10-05 07	DA9-P
33-10-05 08	DA1-P
33-10-05 08	DA2-P
33-10-05 08	DA46-P
33-10-05 08	DA47-P
33-10-05 08	DA9-P
33-10-05 09	DA1-P
33-10-05 09	DA2-P
33-10-05 09	DA46-P
33-10-05 09	DA47-P
33-10-05 09	DA9-P
33-10-05 11	DA1-P
33-10-05 11	DA2-P
33-10-05 11	DA46-P
33-10-05 11	DA47-P
33-10-05 11	DA9-P
33-10-10 31	DA50-P
33-10-20 04	DA46-P
33-10-20 04	DA47-P
33-10-20 04	DA8-P
33-10-20 04	DA9-P
33-10-20 07	DA46-P
33-10-20 07	DA47-P
33-10-20 07	DA8-P

PART NUMBER CH-SECT-UNIT-FIG-ITEM	IDENT
MTC100KT1-1102	
33-10-20 07	DA9-P
33-10-20 08	DA46-P
33-10-20 08	DA47-P
33-10-20 08	DA8-P
33-10-20 08	DA9-P
33-30-05 07	DA28-P
33-30-05 07	DA32-P
33-30-05 08	DA28-P
33-30-05 08	DA32-P
33-30-15 07	CGE-R
33-40-10 05	CGF-R
34-13-01 04	DA2-P
34-13-01 08	DA2-P
34-30-10 53	J115A
34-30-20 53	J116A
49-60-30 06	DA16-P
49-60-30 08	DA16-P
49-60-30 09	DA16-P
49-60-30 11	DA16-P
52-70-10 02	DA16-P
73-20-02 05	CG5-P
73-20-02 05	DHC-R
73-20-10 03	CG5-P
73-20-10 03	DA1-P
73-20-10 03	DA2-P
73-20-10 03	DA3-P
73-20-10 03	DA46-P
79-30-10 02	DA14-P
79-30-10 02	DA15-P
80-10-10 04	DA24-P
MTC100KT1-1103	
21-20-10 03	DA47-R
21-30-10 02	CG3-R
21-30-10 02	DA29-R
21-30-10 04	DA2-R
21-30-10 04	DA29-R
21-60-10 08	CG4-R
21-60-10 08	CG5-R
21-60-10 08	DA2-R
21-60-10 08	DH-C-P
21-60-10 10	CG4-R
21-60-10 10	CG5-R
21-60-10 10	DA2-R
21-60-10 10	DH-C-P
21-60-10 11	CG4-R
21-60-10 11	CG5-R
21-60-10 11	DA2-R
21-60-10 11	DH-C-P
21-60-20 02	CG3-R
21-60-20 03	CG3-R

PART NUMBER CH-SECT-UNIT-FIG-ITEM	IDENT
MTC100KT1-1103	
22-10-40 53	P280A
24-21-17 03	CG3-R
24-21-17 03	CG5-R
24-21-17 03	DA14-R
24-21-17 03	DA15-R
24-21-17 03	DA3-R
24-21-17 04	CG3-R
24-21-17 04	CG5-R
24-21-17 04	DA14-R
24-21-17 04	DA15-R
24-21-17 04	DA3-R
24-30-10 02	DA1-R
24-30-10 02	DA14-R
24-30-10 02	DA3-R
24-30-20 02	CG5-R
24-30-20 02	DA18-R
24-30-20 02	DA2-R
24-30-20 03	CG5-R
24-30-20 03	DA18-R
24-30-20 03	DA2-R
24-50-01 05	DA1-R
24-50-01 05	DA14-R
24-50-01 05	DA15-R
24-50-01 05	DA29-R
24-50-01 05	DA3-R
24-50-01 06	DA1-R
24-50-01 06	DA14-R
24-50-01 06	DA15-R
24-50-01 06	DA29-R
24-50-01 06	DA3-R
24-50-01 07	DA1-R
24-50-01 07	DA14-R
24-50-01 07	DA15-R
24-50-01 07	DA29-R
24-50-01 07	DA3-R
26-10-10 03	DA28-R
26-10-10 03	DA29-R
26-10-10 03	DA46-R
26-10-10 03	F-CG-P
26-10-20 02	DA16-R
26-10-30 03	CG4-R
26-10-30 03	DA15-R
26-10-30 03	DA17-R
26-10-30 03	DA18-R
26-20-10 03	CG5-R
26-20-10 03	E-CG-P
26-20-10 03	F-CG-P
27-00-10 03	DA16-R
27-00-10 04	DA16-R
27-24-10 02	CG3-R

PART NUMBER CH-SECT-UNIT-FIG-ITEM	IDENT
MTC100KT1-1103	
27-24-10 02	DA16-R
27-24-10 02	DA47-R
27-24-10 03	CG3-R
27-24-10 03	DA16-R
27-24-10 03	DA47-R
27-33-00 05	DA1-R
27-33-00 05	DA16-R
27-33-00 05	DA2-R
27-33-00 05	DA42-R
27-33-00 05	DA43-R
27-33-00 05	DA46-R
27-33-00 05	DA47-R
27-33-00 05	DA7-R
27-33-00 07	DA1-R
27-33-00 07	DA16-R
27-33-00 07	DA2-R
27-33-00 07	DA42-R
27-33-00 07	DA43-R
27-33-00 07	DA46-R
27-33-00 07	DA47-R
27-33-00 07	DA7-R
27-61-10 03	DA3-R
27-61-10 04	DA3-R
27-61-20 04	CG4-R
27-61-20 04	DA7-R
28-21-05 02	CG4-R
28-21-05 02	CG5-R
28-21-05 02	DA1-R
28-21-05 02	DA2-R
28-21-05 03	CG4-R
28-21-05 03	CG5-R
28-21-05 03	DA1-R
28-21-05 03	DA19-R
28-21-05 03	DA2-R
28-21-05 04	CG4-R
28-21-05 04	CG5-R
28-21-05 04	DA1-R
28-21-05 04	DA2-R
28-40-20 02	DA14-R
28-40-20 02	DA15-R
28-40-40 02	DA14-R
28-40-40 02	DA15-R
28-41-10 02	DA16-R
28-41-10 02	DA43-R
28-41-10 03	DA16-R
28-41-10 03	DA43-R
28-41-20 03	DA16-R
28-41-20 03	DA43-R
28-41-20 03	DA7-R
28-42-10 02	DA16-R

PART NUMBER CH-SECT-UNIT-FIG-ITEM	IDENT
MTC100KT1-1103	
29-31-10 02	DA16-R
29-32-10 05	DA14-P
29-32-10 05	DA28-R
29-32-10 05	DA29-R
30-10-10 11	DA42-R
30-10-10 11	DA46-R
30-10-10 11	DA47-R
30-20-10 02	DA14-R
30-20-10 02	DA15-R
30-20-10 02	DA28-R
30-20-10 02	DA29-R
30-30-20 02	DA1-R
30-30-20 02	DA2-R
30-30-20 02	DA3-R
30-30-20 02	DA42-R
30-30-20 02	DA8-R
30-30-20 02	DA9-R
30-40-15 07	DA16-R
30-40-15 10	DA16-R
30-40-15 11	DA16-R
30-40-15 12	DA16-R
30-40-20 03	DA8-R
30-40-20 05	DA8-R
30-80-10 02	DA1-R
30-80-10 02	DA8-R
30-80-10 03	DA1-R
30-80-10 03	DA8-R
31-20-60 02	DA14-R
31-50-01 04	DA14-R
31-50-01 04	DA15-R
31-50-01 04	DA16-R
31-50-01 04	DA17-R
31-50-01 04	DA18-R
31-50-01 04	DA24-R
31-50-01 04	DA25-R
31-50-01 04	DA26-R
31-50-01 04	DA27-R
31-50-01 04	DA30-R
31-50-01 07	DA14-R
31-50-01 07	DA15-R
31-50-01 07	DA16-R
31-50-01 07	DA17-R
31-50-01 07	DA18-R
31-50-01 07	DA24-R
31-50-01 07	DA25-R
31-50-01 07	DA26-R
31-50-01 07	DA27-R
31-50-01 07	DA30-R
31-50-01 08	DA14-R
31-50-01 08	DA15-R

PART NUMBER CH-SECT-UNIT-FIG-ITEM	IDENT
MTC100KT1-1103	
31-50-01 08	DA16-R
31-50-01 08	DA17-R
31-50-01 08	DA18-R
31-50-01 08	DA24-R
31-50-01 08	DA25-R
31-50-01 08	DA26-R
31-50-01 08	DA27-R
31-50-01 08	DA30-R
31-50-01 08	DA50-R
31-50-01 09	DA14-R
31-50-01 09	DA15-R
31-50-01 09	DA16-R
31-50-01 09	DA17-R
31-50-01 09	DA18-R
31-50-01 09	DA24-R
31-50-01 09	DA25-R
31-50-01 09	DA26-R
31-50-01 09	DA27-R
31-50-01 09	DA30-R
31-50-01 14	DA14-R
31-50-01 14	DA15-R
31-50-01 14	DA16-R
31-50-01 14	DA17-R
31-50-01 14	DA18-R
31-50-01 14	DA24-R
31-50-01 14	DA25-R
31-50-01 14	DA26-R
31-50-01 14	DA27-R
31-50-01 14	DA30-R
31-50-05 03	DA17-R
31-50-05 03	DA50-R
32-60-10 04	DA29-R
32-60-10 04	DA3-R
32-60-10 04	DA7-R
32-60-30 02	DA28-R
32-60-30 02	DA46-R
32-60-30 02	DA47-R
32-60-30 03	DA28-R
32-60-30 03	DA46-R
32-60-30 03	DA47-R
33-10-05 05	DA1-R
33-10-05 05	DA2-R
33-10-05 05	DA46-R
33-10-05 05	DA47-R
33-10-05 07	DA1-R
33-10-05 07	DA2-R
33-10-05 07	DA46-R
33-10-05 07	DA47-R
33-10-05 08	DA1-R
33-10-05 08	DA2-R

PART NUMBER CH-SECT-UNIT-FIG-ITEM	IDENT
MTC100KT1-1103	
33-10-05 08	DA46-R
33-10-05 08	DA47-R
33-10-05 09	DA1-R
33-10-05 09	DA2-R
33-10-05 09	DA46-R
33-10-05 09	DA47-R
33-10-05 11	DA1-R
33-10-05 11	DA2-R
33-10-05 11	DA46-R
33-10-05 11	DA47-R
33-10-10 31	DA50-R
33-10-20 04	DA46-R
33-10-20 04	DA47-R
33-10-20 04	DA8-R
33-10-20 07	DA46-R
33-10-20 07	DA47-R
33-10-20 07	DA8-R
33-10-20 08	DA46-R
33-10-20 08	DA47-R
33-10-20 08	DA8-R
33-30-05 07	DA28-R
33-30-05 07	DA32-R
33-30-05 08	DA28-R
33-30-05 08	DA32-R
33-30-15 07	CGE-P
33-40-10 05	CGF-P
33-40-20 04	E-CG-P
33-40-20 04	F-CG-P
33-40-30 03	CGE-P
34-13-01 04	DA2-R
34-13-01 04	DA7-R
34-13-01 08	DA2-R
34-13-01 08	DA7-R
49-60-30 06	DA16-R
49-60-30 08	DA16-R
49-60-30 09	DA16-R
49-60-30 11	DA16-R
52-70-10 02	DA16-R
73-20-01 05	DA14-R
73-20-01 05	DHC-R
73-20-02 05	CG4-R
73-20-02 05	CG5-R
73-20-02 05	DA18-R
73-20-02 05	DHC-P
73-20-10 03	CG5-R
73-20-10 03	DA1-R
73-20-10 03	DA2-R
73-20-10 03	DA3-R
73-20-10 03	DA46-R
78-30-05 01	DA51-R

PART NUMBER CH-SECT-UNIT-FIG-ITEM	IDENT
MTC100KT1-1103	
78-30-05 02	DA51-R
79-30-10 02	DA14-R
79-30-10 02	DA15-R
80-10-10 04	DA24-R
MTC100KT1-1104	
21-20-10 03	DA47-R
21-30-10 02	DA29-R
21-30-10 04	DA2-R
21-60-10 08	CG4-R
21-60-10 08	CG5-R
21-60-10 08	DA2-R
21-60-10 08	DH-C-P
21-60-10 10	CG4-R
21-60-10 10	CG5-R
21-60-10 10	DA2-R
21-60-10 10	DH-C-P
21-60-10 11	CG4-R
21-60-10 11	CG5-R
21-60-10 11	DA2-R
21-60-10 11	DH-C-P
22-10-40 53	P280A
24-21-17 03	CG5-R
24-21-17 03	DA14-R
24-21-17 03	DA15-R
24-21-17 03	DA3-R
24-21-17 04	CG5-R
24-21-17 04	DA14-R
24-21-17 04	DA15-R
24-21-17 04	DA3-R
24-30-10 02	DA1-R
24-30-10 02	DA14-R
24-30-10 02	DA3-R
24-30-20 02	CG5-R
24-30-20 02	DA2-R
24-30-20 03	CG5-R
24-30-20 03	DA2-R
24-50-01 05	DA1-R
24-50-01 05	DA14-R
24-50-01 05	DA15-R
24-50-01 05	DA29-R
24-50-01 05	DA3-R
24-50-01 06	DA1-R
24-50-01 06	DA14-R
24-50-01 06	DA15-R
24-50-01 06	DA29-R
24-50-01 06	DA3-R
24-50-01 07	DA1-R
24-50-01 07	DA14-R
24-50-01 07	DA15-R
24-50-01 07	DA29-R

PART NUMBER CH-SECT-UNIT-FIG-ITEM	IDENT
MTC100KT1-1104	
24-50-01 07	DA3-R
26-10-10 03	DA28-R
26-10-10 03	DA29-R
26-10-10 03	DA46-R
26-10-10 03	F-CG-P
26-10-20 02	DA16-R
26-10-30 03	CG4-R
26-10-30 03	DA15-R
26-20-10 03	E-CG-P
26-20-10 03	F-CG-P
27-00-10 03	DA16-R
27-00-10 04	DA16-R
27-24-10 02	DA16-R
27-24-10 02	DA47-R
27-24-10 03	DA16-R
27-24-10 03	DA47-R
27-33-00 05	DA1-R
27-33-00 05	DA16-R
27-33-00 05	DA2-R
27-33-00 05	DA42-R
27-33-00 05	DA43-R
27-33-00 05	DA46-R
27-33-00 05	DA47-R
27-33-00 07	DA1-R
27-33-00 07	DA16-R
27-33-00 07	DA2-R
27-33-00 07	DA42-R
27-33-00 07	DA43-R
27-33-00 07	DA46-R
27-33-00 07	DA47-R
27-61-10 03	DA3-R
27-61-10 04	DA3-R
27-61-20 04	CG4-R
28-21-05 02	CG4-R
28-21-05 02	CG5-R
28-21-05 02	DA1-R
28-21-05 02	DA2-R
28-21-05 03	CG4-R
28-21-05 03	CG5-R
28-21-05 03	DA1-R
28-21-05 03	DA19-R
28-21-05 03	DA2-R
28-21-05 04	CG4-R
28-21-05 04	CG5-R
28-21-05 04	DA1-R
28-21-05 04	DA2-R
28-40-20 02	DA14-R
28-40-20 02	DA15-R
28-40-40 02	DA14-R
28-40-40 02	DA15-R

PART NUMBER CH-SECT-UNIT-FIG-ITEM	IDENT
MTC100KT1-1104	
28-41-10 02	DA16-R
28-41-10 02	DA43-R
28-41-10 03	DA16-R
28-41-10 03	DA43-R
28-41-20 03	DA16-R
28-41-20 03	DA43-R
28-42-10 02	DA16-R
29-31-10 02	DA16-R
29-32-10 05	DA14-P
29-32-10 05	DA28-R
29-32-10 05	DA29-R
30-10-10 11	DA42-R
30-10-10 11	DA46-R
30-10-10 11	DA47-R
30-20-10 02	DA14-R
30-20-10 02	DA15-R
30-20-10 02	DA28-R
30-20-10 02	DA29-R
30-30-20 02	DA1-R
30-30-20 02	DA2-R
30-30-20 02	DA3-R
30-30-20 02	DA42-R
30-30-20 02	DA8-R
30-30-20 02	DA9-R
30-40-15 07	DA16-R
30-40-15 10	DA16-R
30-40-15 11	DA16-R
30-40-15 12	DA16-R
30-40-20 03	DA8-R
30-40-20 03	DA9-R
30-40-20 05	DA8-R
30-40-20 05	DA9-R
30-80-10 02	DA1-R
30-80-10 02	DA8-R
30-80-10 03	DA1-R
30-80-10 03	DA8-R
31-20-60 02	DA14-R
31-50-01 04	DA14-R
31-50-01 04	DA15-R
31-50-01 04	DA16-R
31-50-01 04	DA24-R
31-50-01 04	DA25-R
31-50-01 04	DA26-R
31-50-01 04	DA27-R
31-50-01 07	DA14-R
31-50-01 07	DA15-R
31-50-01 07	DA16-R
31-50-01 07	DA24-R
31-50-01 07	DA25-R
31-50-01 07	DA26-R

PART NUMBER CH-SECT-UNIT-FIG-ITEM	IDENT
MTC100KT1-1104	
31-50-01 07	DA27-R
31-50-01 08	DA14-R
31-50-01 08	DA15-R
31-50-01 08	DA16-R
31-50-01 08	DA24-R
31-50-01 08	DA25-R
31-50-01 08	DA26-R
31-50-01 08	DA27-R
31-50-01 09	DA14-R
31-50-01 09	DA15-R
31-50-01 09	DA16-R
31-50-01 09	DA24-R
31-50-01 09	DA25-R
31-50-01 09	DA26-R
31-50-01 09	DA27-R
31-50-01 14	DA14-R
31-50-01 14	DA15-R
31-50-01 14	DA16-R
31-50-01 14	DA24-R
31-50-01 14	DA25-R
31-50-01 14	DA26-R
31-50-01 14	DA27-R
32-60-10 04	DA29-R
32-60-10 04	DA3-R
32-60-10 04	DA7-R
32-60-30 02	DA28-R
32-60-30 02	DA46-R
32-60-30 02	DA47-R
32-60-30 03	DA28-R
32-60-30 03	DA46-R
32-60-30 03	DA47-R
33-10-05 05	DA1-R
33-10-05 05	DA2-R
33-10-05 05	DA46-R
33-10-05 05	DA47-R
33-10-05 05	DA9-R
33-10-05 07	DA1-R
33-10-05 07	DA2-R
33-10-05 07	DA46-R
33-10-05 07	DA47-R
33-10-05 07	DA9-R
33-10-05 08	DA1-R
33-10-05 08	DA2-R
33-10-05 08	DA46-R
33-10-05 08	DA47-R
33-10-05 08	DA9-R
33-10-05 09	DA1-R
33-10-05 09	DA2-R
33-10-05 09	DA46-R
33-10-05 09	DA47-R

PART NUMBER CH-SECT-UNIT-FIG-ITEM	IDENT
MTC100KT1-1104	
33-10-05 09	DA9-R
33-10-05 11	DA1-R
33-10-05 11	DA2-R
33-10-05 11	DA46-R
33-10-05 11	DA47-R
33-10-05 11	DA9-R
33-10-10 31	DA50-R
33-10-20 04	DA46-R
33-10-20 04	DA47-R
33-10-20 04	DA8-R
33-10-20 04	DA9-R
33-10-20 07	DA46-R
33-10-20 07	DA47-R
33-10-20 07	DA8-R
33-10-20 07	DA9-R
33-10-20 08	DA46-R
33-10-20 08	DA47-R
33-10-20 08	DA8-R
33-10-20 08	DA9-R
33-30-05 07	DA28-R
33-30-05 07	DA32-R
33-30-05 08	DA28-R
33-30-05 08	DA32-R
33-30-15 07	CGE-P
33-40-10 05	CGF-P
33-40-20 04	E-CG-P
33-40-20 04	F-CG-P
33-40-30 03	CGE-P
34-13-01 04	DA2-R
34-13-01 08	DA2-R
49-60-30 06	DA16-R
49-60-30 08	DA16-R
49-60-30 09	DA16-R
49-60-30 11	DA16-R
52-70-10 02	DA16-R
73-20-02 05	CG4-R
73-20-02 05	CG5-R
73-20-02 05	DHC-P
73-20-10 03	CG5-R
73-20-10 03	DA1-R
73-20-10 03	DA2-R
73-20-10 03	DA3-R
73-20-10 03	DA46-R
79-30-10 02	DA14-R
79-30-10 02	DA15-R
80-10-10 04	DA24-R
MTC100KT2-1101	
21-20-10 03	CG7-P
21-20-10 03	DA20-P
21-30-10 02	DA21-P

PART NUMBER CH-SECT-UNIT-FIG-ITEM	IDENT
MTC100KT2-1101	
21-30-10 04	DA21-P
21-31-10 07	DA20-P
21-31-10 07	DA31-P
21-31-10 07	DA32-P
21-31-10 07	DA33-P
21-31-10 07	DA35-P
21-60-10 08	CG1-P
21-60-10 08	CG2-P
21-60-10 08	CG6-P
21-60-10 08	CG7-P
21-60-10 08	DA19-P
21-60-10 08	DA20-P
21-60-10 08	DA21-P
21-60-10 08	DA35-P
21-60-10 08	DA4-P
21-60-10 10	CG1-P
21-60-10 10	CG2-P
21-60-10 10	CG6-P
21-60-10 10	CG7-P
21-60-10 10	DA19-P
21-60-10 10	DA20-P
21-60-10 10	DA21-P
21-60-10 10	DA35-P
21-60-10 10	DA4-P
21-60-10 11	CG1-P
21-60-10 11	CG2-P
21-60-10 11	CG6-P
21-60-10 11	CG7-P
21-60-10 11	DA19-P
21-60-10 11	DA20-P
21-60-10 11	DA21-P
21-60-10 11	DA35-P
21-60-10 11	DA4-P
21-60-20 02	CG7-P
21-60-20 02	DA19-P
21-60-20 02	DA20-P
21-60-20 03	CG7-P
21-60-20 03	DA19-P
21-60-20 03	DA20-P
24-21-17 03	DA21-P
24-21-17 04	DA21-P
24-30-10 02	CG1-P
24-30-20 02	DA4-P
24-30-20 03	DA4-P
24-50-01 05	CG1-P
24-50-01 05	CG2-P
24-50-01 05	DA19-P
24-50-01 05	DA20-P
24-50-01 05	DA21-P
24-50-01 05	DA4-P

PART NUMBER CH-SECT-UNIT-FIG-ITEM	IDENT
MTC100KT2-1101	
24-50-01 06	CG1-P
24-50-01 06	CG2-P
24-50-01 06	DA19-P
24-50-01 06	DA20-P
24-50-01 06	DA21-P
24-50-01 06	DA4-P
24-50-01 07	CG1-P
24-50-01 07	CG2-P
24-50-01 07	DA19-P
24-50-01 07	DA20-P
24-50-01 07	DA21-P
24-50-01 07	DA4-P
26-10-10 03	CG1-P
26-10-10 03	CG2-P
26-10-10 03	DA19-P
26-10-10 03	DA20-P
26-10-10 03	DA31-P
26-10-10 03	DA5-P
26-10-10 03	SC-R
26-10-20 02	CG7-P
26-10-20 02	DA33-P
26-20-10 03	CG1-P
26-20-10 03	CG2-P
26-20-10 03	DA19-P
26-20-10 03	DA20-P
27-00-10 03	DA16-P
27-00-10 04	DA16-P
27-24-10 02	CG2-P
27-24-10 02	DA19-P
27-24-10 02	DA20-P
27-24-10 02	DA35-P
27-24-10 02	DGE-R
27-24-10 02	DGF-R
27-24-10 03	CG2-P
27-24-10 03	DA19-P
27-24-10 03	DA20-P
27-24-10 03	DA35-P
27-24-10 03	DGE-R
27-24-10 03	DGF-R
27-33-00 05	CG6-P
27-33-00 05	CG7-P
27-33-00 05	DA21-P
27-33-00 05	DA31-P
27-33-00 05	DA32-P
27-33-00 05	DA33-P
27-33-00 05	DA35-P
27-33-00 05	DA5-P
27-33-00 05	DA6-P
27-33-00 05	SC-R
27-33-00 07	CG6-P

PART NUMBER CH-SECT-UNIT-FIG-ITEM	IDENT
MTC100KT2-1101	
27-33-00 07	CG7-P
27-33-00 07	DA21-P
27-33-00 07	DA31-P
27-33-00 07	DA32-P
27-33-00 07	DA33-P
27-33-00 07	DA35-P
27-33-00 07	DA5-P
27-33-00 07	DA6-P
27-33-00 07	SC-R
27-50-10 02	DA35-P
27-61-10 03	DA35-P
27-61-10 03	DA6-P
27-61-10 04	DA35-P
27-61-10 04	DA6-P
27-61-20 04	DA19-P
27-61-20 04	DA33-P
28-21-05 02	CG6-P
28-21-05 02	CG7-P
28-21-05 02	DA19-P
28-21-05 02	DA20-P
28-21-05 03	CG6-P
28-21-05 03	CG7-P
28-21-05 03	DA20-P
28-21-05 04	CG6-P
28-21-05 04	CG7-P
28-21-05 04	DA19-P
28-21-05 04	DA20-P
28-40-10 04	DA31-P
28-40-10 04	DA33-P
28-40-10 05	DA31-P
28-40-10 05	DA33-P
28-41-10 02	DA4-P
28-41-10 02	DA5-P
28-41-10 03	DA4-P
28-41-10 03	DA5-P
28-42-10 02	DA35-P
29-31-10 02	DA33-P
29-32-10 05	DGF-R
30-10-10 11	DA20-P
30-10-10 11	DA5-P
30-20-10 02	CG1-P
30-20-10 02	CG2-P
30-20-10 02	DA19-P
30-20-10 02	DA20-P
30-20-10 02	DGE-R
30-20-10 02	DGF-R
30-30-10 02	DA6-P
30-30-20 02	DA35-P
30-30-20 02	DA4-P
30-30-20 02	SC-R

PART NUMBER CH-SECT-UNIT-FIG-ITEM	IDENT
MTC100KT2-1101	
30-40-15 07	CG6-P
30-40-15 07	CG7-P
30-40-15 07	DA19-P
30-40-15 07	DA20-P
30-40-15 07	DA31-P
30-40-15 07	DA35-P
30-40-15 07	DA5-P
30-40-15 07	DA6-P
30-40-15 10	CG6-P
30-40-15 10	CG7-P
30-40-15 10	DA19-P
30-40-15 10	DA20-P
30-40-15 10	DA31-P
30-40-15 10	DA35-P
30-40-15 10	DA5-P
30-40-15 10	DA6-P
30-40-15 11	CG6-P
30-40-15 11	CG7-P
30-40-15 11	DA19-P
30-40-15 11	DA20-P
30-40-15 11	DA31-P
30-40-15 11	DA35-P
30-40-15 11	DA5-P
30-40-15 11	DA6-P
30-40-15 12	CG6-P
30-40-15 12	CG7-P
30-40-15 12	DA19-P
30-40-15 12	DA20-P
30-40-15 12	DA31-P
30-40-15 12	DA35-P
30-40-15 12	DA5-P
30-40-15 12	DA6-P
30-40-20 03	CG6-P
30-40-20 03	CG7-P
30-40-20 03	DA19-P
30-40-20 03	DA20-P
30-40-20 03	DA31-P
30-40-20 03	DA35-P
30-40-20 05	CG6-P
30-40-20 05	CG7-P
30-40-20 05	DA19-P
30-40-20 05	DA20-P
30-40-20 05	DA31-P
30-40-20 05	DA35-P
30-80-10 02	DA20-P
30-80-10 02	DA21-P
30-80-10 02	DA35-P
30-80-10 03	DA20-P
30-80-10 03	DA21-P
30-80-10 03	DA35-P

PART NUMBER CH-SECT-UNIT-FIG-ITEM	IDENT
MTC100KT2-1101	
31-20-35 02	DA28-P
31-20-35 02	DA32-P
31-20-35 02	DA33-P
31-20-35 02	DA35-P
31-20-35 02	DGE-R
31-20-35 02	DGF-R
31-20-35 03	DA28-P
31-20-35 03	DA32-P
31-20-35 03	DA33-P
31-20-35 03	DA35-P
31-20-35 03	DGF-R
31-20-60 02	DA31-P
31-20-60 02	DA33-P
31-20-60 02	DA35-P
31-50-01 04	CG6-P
31-50-01 04	CG7-P
31-50-01 04	CY1-R
31-50-01 04	DA31-P
31-50-01 04	DA33-P
31-50-01 07	CG6-P
31-50-01 07	CG7-P
31-50-01 07	CY1-R
31-50-01 07	DA31-P
31-50-01 07	DA33-P
31-50-01 08	CG6-P
31-50-01 08	CG7-P
31-50-01 08	CY1-R
31-50-01 08	DA31-P
31-50-01 08	DA33-P
31-50-01 09	CG6-P
31-50-01 09	CG7-P
31-50-01 09	CY1-R
31-50-01 09	DA31-P
31-50-01 09	DA33-P
31-50-01 14	CG6-P
31-50-01 14	CG7-P
31-50-01 14	CY1-R
31-50-01 14	DA31-P
31-50-01 14	DA33-P
31-50-01 14	DA6-P
32-60-10 04	CG6-P
32-60-10 04	DA33-P
32-60-10 04	DA35-P
32-60-10 04	DA5-P
32-60-10 04	DA6-P
32-60-10 04	DGE-R
32-60-20 02	DA35-P
33-10-05 05	CG6-P
33-10-05 05	CY1-R
33-10-05 05	CY3-R

PART NUMBER CH-SECT-UNIT-FIG-ITEM	IDENT
MTC100KT2-1101	
33-10-05 05	DA19-P
33-10-05 05	DA20-P
33-10-05 05	DA21-P
33-10-05 05	DA31-P
33-10-05 05	DA32-P
33-10-05 05	SC-R
33-10-05 07	CG6-P
33-10-05 07	CY1-R
33-10-05 07	CY3-R
33-10-05 07	DA19-P
33-10-05 07	DA20-P
33-10-05 07	DA21-P
33-10-05 07	DA31-P
33-10-05 07	DA32-P
33-10-05 07	SC-R
33-10-05 08	CG6-P
33-10-05 08	CY1-R
33-10-05 08	CY3-R
33-10-05 08	DA19-P
33-10-05 08	DA20-P
33-10-05 08	DA21-P
33-10-05 08	DA31-P
33-10-05 08	DA32-P
33-10-05 08	SC-R
33-10-05 09	CG6-P
33-10-05 09	CY1-R
33-10-05 09	CY3-R
33-10-05 09	DA19-P
33-10-05 09	DA20-P
33-10-05 09	DA21-P
33-10-05 09	DA31-P
33-10-05 09	DA32-P
33-10-05 09	SC-R
33-10-05 11	CG6-P
33-10-05 11	CY1-R
33-10-05 11	CY3-R
33-10-05 11	DA19-P
33-10-05 11	DA20-P
33-10-05 11	DA21-P
33-10-05 11	DA31-P
33-10-05 11	DA32-P
33-10-05 11	SC-R
33-10-10 31	CY3-R
33-10-20 04	CY1-R
33-10-20 04	CY3-R
33-10-20 04	DA32-P
33-10-20 04	DA6-P
33-10-20 07	CY1-R
33-10-20 07	CY3-R
33-10-20 07	DA32-P

PART NUMBER CH-SECT-UNIT-FIG-ITEM	IDENT
MTC100KT2-1101	
33-10-20 07	DA6-P
33-10-20 08	CY1-R
33-10-20 08	CY3-R
33-10-20 08	DA32-P
33-10-20 08	DA6-P
33-30-05 08	SC-R
33-30-15 07	DA21-P
33-40-10 05	CG2-P
33-40-10 05	CG7-P
33-40-10 05	DA20-P
33-40-20 04	CG6-P
33-40-20 04	CG7-P
33-40-20 04	DA19-P
33-40-20 04	DA20-P
33-40-30 03	CG6-P
33-40-30 03	DA21-P
33-50-10 09	CG7-P
34-13-01 04	DA19-P
34-13-01 04	DA20-P
34-13-01 08	DA19-P
34-13-01 08	DA20-P
49-60-10 05	DHE-R
49-60-30 06	CG2-P
49-60-30 08	CG2-P
49-60-30 08	DA4-P
49-60-30 09	CG2-P
49-60-30 09	DA4-P
49-60-30 11	CG2-P
49-60-30 11	DA4-P
52-70-10 02	DA31-P
73-20-01 05	CG1-P
73-20-01 05	DGE-R
73-20-02 05	CG7-P
73-20-02 05	CG7-R
73-20-10 03	CG1-P
73-20-10 03	DA4-P
73-20-10 03	DA5-P
77-10-10 02	DGE-R
77-10-10 02	DGF-R
79-30-10 02	DA31-P
79-30-10 02	DA33-P
79-30-10 02	DGE-R
79-30-10 02	DGF-R
80-10-10 04	CG1-P
80-10-10 04	CG2-P
80-10-10 04	CG6-P
80-10-10 04	CG7-P
80-10-10 04	DGE-R
80-10-10 04	DGF-R
MTC100KT2-1102	

PART NUMBER CH-SECT-UNIT-FIG-ITEM	IDENT
MTC100KT2-1102	
21-20-10 03	CG7-P
21-20-10 03	DA20-P
21-30-10 02	DA21-P
21-30-10 04	DA21-P
21-31-10 07	DA20-P
21-31-10 07	DA31-P
21-31-10 07	DA32-P
21-31-10 07	DA33-P
21-31-10 07	DA35-P
21-60-10 08	CG1-P
21-60-10 08	CG2-P
21-60-10 08	CG6-P
21-60-10 08	CG7-P
21-60-10 08	DA19-P
21-60-10 08	DA20-P
21-60-10 08	DA21-P
21-60-10 08	DA35-P
21-60-10 08	DA4-P
21-60-10 10	CG1-P
21-60-10 10	CG2-P
21-60-10 10	CG6-P
21-60-10 10	CG7-P
21-60-10 10	DA19-P
21-60-10 10	DA20-P
21-60-10 10	DA21-P
21-60-10 10	DA35-P
21-60-10 10	DA4-P
21-60-10 11	CG1-P
21-60-10 11	CG2-P
21-60-10 11	CG6-P
21-60-10 11	CG7-P
21-60-10 11	DA19-P
21-60-10 11	DA20-P
21-60-10 11	DA21-P
21-60-10 11	DA35-P
21-60-10 11	DA4-P
21-60-20 02	CG7-P
21-60-20 02	DA19-P
21-60-20 02	DA20-P
21-60-20 03	CG7-P
21-60-20 03	DA19-P
21-60-20 03	DA20-P
24-21-17 03	DA21-P
24-21-17 04	DA21-P
24-30-10 02	CG1-P
24-30-20 02	DA4-P
24-30-20 03	DA4-P
24-50-01 05	CG1-P
24-50-01 05	CG2-P
24-50-01 05	DA19-P

PART NUMBER CH-SECT-UNIT-FIG-ITEM	IDENT
MTC100KT2-1102	
24-50-01 05	DA20-P
24-50-01 05	DA21-P
24-50-01 05	DA4-P
24-50-01 06	CG1-P
24-50-01 06	CG2-P
24-50-01 06	DA19-P
24-50-01 06	DA20-P
24-50-01 06	DA21-P
24-50-01 06	DA4-P
24-50-01 07	CG1-P
24-50-01 07	CG2-P
24-50-01 07	DA19-P
24-50-01 07	DA20-P
24-50-01 07	DA21-P
24-50-01 07	DA4-P
26-10-10 03	CG1-P
26-10-10 03	CG2-P
26-10-10 03	DA19-P
26-10-10 03	DA20-P
26-10-10 03	DA31-P
26-10-10 03	DA5-P
26-10-20 02	CG7-P
26-10-20 02	DA33-P
26-20-10 03	CG1-P
26-20-10 03	CG2-P
26-20-10 03	CG5-P
26-20-10 03	DA19-P
26-20-10 03	DA20-P
27-00-10 03	DA16-P
27-00-10 04	DA16-P
27-24-10 02	CG2-P
27-24-10 02	DA19-P
27-24-10 02	DA20-P
27-24-10 02	DA35-P
27-24-10 02	DGE-R
27-24-10 02	DGF-R
27-24-10 03	CG2-P
27-24-10 03	DA19-P
27-24-10 03	DA20-P
27-24-10 03	DA35-P
27-24-10 03	DGE-R
27-24-10 03	DGF-R
27-33-00 05	CG6-P
27-33-00 05	CG7-P
27-33-00 05	DA21-P
27-33-00 05	DA31-P
27-33-00 05	DA32-P
27-33-00 05	DA33-P
27-33-00 05	DA35-P
27-33-00 05	DA5-P

PART NUMBER CH-SECT-UNIT-FIG-ITEM	IDENT
MTC100KT2-1102	
27-33-00 05	DA6-P
27-33-00 07	CG6-P
27-33-00 07	CG7-P
27-33-00 07	DA21-P
27-33-00 07	DA31-P
27-33-00 07	DA32-P
27-33-00 07	DA33-P
27-33-00 07	DA35-P
27-33-00 07	DA5-P
27-33-00 07	DA6-P
27-50-10 02	DA35-P
27-61-10 03	DA35-P
27-61-10 03	DA6-P
27-61-10 04	DA35-P
27-61-10 04	DA6-P
27-61-20 04	DA19-P
27-61-20 04	DA33-P
28-21-05 02	CG6-P
28-21-05 02	CG7-P
28-21-05 02	DA19-P
28-21-05 02	DA20-P
28-21-05 03	CG6-P
28-21-05 03	CG7-P
28-21-05 03	DA20-P
28-21-05 04	CG6-P
28-21-05 04	CG7-P
28-21-05 04	DA19-P
28-21-05 04	DA20-P
28-40-10 04	DA31-P
28-40-10 04	DA33-P
28-40-10 05	DA31-P
28-40-10 05	DA33-P
28-41-10 02	DA4-P
28-41-10 02	DA5-P
28-41-10 03	DA4-P
28-41-10 03	DA5-P
28-42-10 02	DA35-P
29-31-10 02	DA33-P
29-32-10 05	DGF-R
30-10-10 11	DA20-P
30-10-10 11	DA5-P
30-20-10 02	CG1-P
30-20-10 02	CG2-P
30-20-10 02	DA19-P
30-20-10 02	DA20-P
30-20-10 02	DGE-R
30-20-10 02	DGF-R
30-30-10 02	DA6-P
30-30-20 02	DA35-P
30-30-20 02	DA4-P

PART NUMBER CH-SECT-UNIT-FIG-ITEM	IDENT
MTC100KT2-1102	
30-40-15 07	CG6-P
30-40-15 07	CG7-P
30-40-15 07	DA19-P
30-40-15 07	DA20-P
30-40-15 07	DA31-P
30-40-15 07	DA35-P
30-40-15 07	DA5-P
30-40-15 07	DA6-P
30-40-15 10	CG6-P
30-40-15 10	CG7-P
30-40-15 10	DA19-P
30-40-15 10	DA20-P
30-40-15 10	DA31-P
30-40-15 10	DA35-P
30-40-15 10	DA5-P
30-40-15 10	DA6-P
30-40-15 11	CG6-P
30-40-15 11	CG7-P
30-40-15 11	DA19-P
30-40-15 11	DA20-P
30-40-15 11	DA31-P
30-40-15 11	DA35-P
30-40-15 11	DA5-P
30-40-15 11	DA6-P
30-40-15 12	CG6-P
30-40-15 12	CG7-P
30-40-15 12	DA19-P
30-40-15 12	DA20-P
30-40-15 12	DA31-P
30-40-15 12	DA35-P
30-40-15 12	DA5-P
30-40-15 12	DA6-P
30-40-20 03	CG6-P
30-40-20 03	CG7-P
30-40-20 03	DA19-P
30-40-20 03	DA20-P
30-40-20 03	DA31-P
30-40-20 03	DA35-P
30-40-20 05	CG6-P
30-40-20 05	CG7-P
30-40-20 05	DA19-P
30-40-20 05	DA20-P
30-40-20 05	DA31-P
30-40-20 05	DA35-P
30-80-10 02	DA20-P
30-80-10 02	DA21-P
30-80-10 02	DA35-P
30-80-10 03	DA20-P
30-80-10 03	DA21-P
30-80-10 03	DA35-P

PART NUMBER CH-SECT-UNIT-FIG-ITEM	IDENT
MTC100KT2-1102	
31-20-35 02	DA28-P
31-20-35 02	DA32-P
31-20-35 02	DA33-P
31-20-35 02	DA35-P
31-20-35 02	DGE-R
31-20-35 02	DGF-R
31-20-35 03	DA28-P
31-20-35 03	DA32-P
31-20-35 03	DA33-P
31-20-35 03	DA35-P
31-20-35 03	DGF-R
31-20-60 02	DA31-P
31-20-60 02	DA33-P
31-20-60 02	DA35-P
31-50-01 04	CG6-P
31-50-01 04	CG7-P
31-50-01 04	CY1-R
31-50-01 04	DA31-P
31-50-01 04	DA33-P
31-50-01 07	CG6-P
31-50-01 07	CG7-P
31-50-01 07	CY1-R
31-50-01 07	DA31-P
31-50-01 07	DA33-P
31-50-01 08	CG6-P
31-50-01 08	CG7-P
31-50-01 08	CY1-R
31-50-01 08	DA31-P
31-50-01 08	DA33-P
31-50-01 09	CG6-P
31-50-01 09	CG7-P
31-50-01 09	CY1-R
31-50-01 09	DA31-P
31-50-01 09	DA33-P
31-50-01 14	CG6-P
31-50-01 14	CG7-P
31-50-01 14	CY1-R
31-50-01 14	DA31-P
31-50-01 14	DA33-P
31-50-01 14	DA6-P
32-60-10 04	CG6-P
32-60-10 04	DA33-P
32-60-10 04	DA35-P
32-60-10 04	DA5-P
32-60-10 04	DA6-P
32-60-10 04	DGE-R
32-60-20 02	DA35-P
33-10-05 05	CG6-P
33-10-05 05	CY1-R
33-10-05 05	CY3-R

PART NUMBER CH-SECT-UNIT-FIG-ITEM	IDENT
MTC100KT2-1102	
33-10-05 05	DA19-P
33-10-05 05	DA20-P
33-10-05 05	DA21-P
33-10-05 05	DA31-P
33-10-05 05	DA32-P
33-10-05 07	CG6-P
33-10-05 07	CY1-R
33-10-05 07	CY3-R
33-10-05 07	DA19-P
33-10-05 07	DA20-P
33-10-05 07	DA21-P
33-10-05 07	DA31-P
33-10-05 07	DA32-P
33-10-05 08	CG6-P
33-10-05 08	CY1-R
33-10-05 08	CY3-R
33-10-05 08	DA19-P
33-10-05 08	DA20-P
33-10-05 08	DA21-P
33-10-05 08	DA31-P
33-10-05 08	DA32-P
33-10-05 09	CG6-P
33-10-05 09	CY1-R
33-10-05 09	CY3-R
33-10-05 09	DA19-P
33-10-05 09	DA20-P
33-10-05 09	DA21-P
33-10-05 09	DA31-P
33-10-05 09	DA32-P
33-10-05 11	CG6-P
33-10-05 11	CY1-R
33-10-05 11	CY3-R
33-10-05 11	DA19-P
33-10-05 11	DA20-P
33-10-05 11	DA21-P
33-10-05 11	DA31-P
33-10-05 11	DA32-P
33-10-10 31	CY3-R
33-10-20 04	CY1-R
33-10-20 04	CY3-R
33-10-20 04	DA32-P
33-10-20 04	DA6-P
33-10-20 07	CY1-R
33-10-20 07	CY3-R
33-10-20 07	DA32-P
33-10-20 07	DA6-P
33-10-20 08	CY1-R
33-10-20 08	CY3-R
33-10-20 08	DA32-P
33-10-20 08	DA6-P

PART NUMBER CH-SECT-UNIT-FIG-ITEM	IDENT
MTC100KT2-1102	
33-30-15 07	DA21-P
33-40-10 05	CG2-P
33-40-10 05	CG7-P
33-40-10 05	DA20-P
33-40-20 04	CG6-P
33-40-20 04	CG7-P
33-40-20 04	DA19-P
33-40-20 04	DA20-P
33-40-30 03	CG6-P
33-40-30 03	DA21-P
33-50-10 09	CG7-P
34-13-01 04	DA19-P
34-13-01 04	DA20-P
34-13-01 08	DA19-P
34-13-01 08	DA20-P
49-60-10 05	DHE-R
49-60-30 06	CG2-P
49-60-30 08	CG2-P
49-60-30 08	DA4-P
49-60-30 09	CG2-P
49-60-30 09	DA4-P
49-60-30 11	CG2-P
49-60-30 11	DA4-P
52-70-10 02	DA31-P
73-20-01 05	CG1-P
73-20-01 05	DGE-R
73-20-02 05	CG7-P
73-20-02 05	CG7-R
73-20-10 03	CG1-P
73-20-10 03	DA4-P
73-20-10 03	DA5-P
77-10-10 02	DGE-R
77-10-10 02	DGF-R
79-30-10 02	DA31-P
79-30-10 02	DA33-P
79-30-10 02	DGE-R
79-30-10 02	DGF-R
80-10-10 04	CG1-P
80-10-10 04	CG2-P
80-10-10 04	CG6-P
80-10-10 04	CG7-P
80-10-10 04	DGE-R
80-10-10 04	DGF-R
MTC100KT2-1103	
21-20-10 03	CG7-R
21-20-10 03	DA20-R
21-30-10 02	DA21-R
21-30-10 04	DA21-R
21-31-10 07	DA20-R
21-31-10 07	DA31-R

PART NUMBER CH-SECT-UNIT-FIG-ITEM	IDENT
MTC100KT2-1103	
21-31-10 07	DA32-R
21-31-10 07	DA33-R
21-31-10 07	DA35-R
21-60-10 08	CG1-R
21-60-10 08	CG2-R
21-60-10 08	CG6-R
21-60-10 08	CG7-R
21-60-10 08	DA19-R
21-60-10 08	DA20-R
21-60-10 08	DA21-R
21-60-10 08	DA35-R
21-60-10 08	DA4-R
21-60-10 10	CG1-R
21-60-10 10	CG2-R
21-60-10 10	CG6-R
21-60-10 10	CG7-R
21-60-10 10	DA19-R
21-60-10 10	DA20-R
21-60-10 10	DA21-R
21-60-10 10	DA35-R
21-60-10 10	DA4-R
21-60-10 11	CG1-R
21-60-10 11	CG2-R
21-60-10 11	CG6-R
21-60-10 11	CG7-R
21-60-10 11	DA19-R
21-60-10 11	DA20-R
21-60-10 11	DA21-R
21-60-10 11	DA35-R
21-60-10 11	DA4-R
21-60-20 02	CG7-R
21-60-20 02	DA19-R
21-60-20 02	DA20-R
21-60-20 03	CG7-R
21-60-20 03	DA19-R
21-60-20 03	DA20-R
24-21-17 03	DA21-R
24-21-17 04	DA21-R
24-30-10 02	CG1-R
24-30-20 02	DA4-R
24-30-20 03	DA4-R
24-50-01 05	CG1-R
24-50-01 05	CG2-R
24-50-01 05	DA19-R
24-50-01 05	DA20-R
24-50-01 05	DA21-R
24-50-01 05	DA4-R
24-50-01 06	CG1-R
24-50-01 06	CG2-R
24-50-01 06	DA19-R

PART NUMBER CH-SECT-UNIT-FIG-ITEM	IDENT
MTC100KT2-1103	
24-50-01 06	DA20-R
24-50-01 06	DA21-R
24-50-01 06	DA4-R
24-50-01 07	CG1-R
24-50-01 07	CG2-R
24-50-01 07	DA19-R
24-50-01 07	DA20-R
24-50-01 07	DA21-R
24-50-01 07	DA4-R
26-10-10 03	CG1-R
26-10-10 03	CG2-R
26-10-10 03	DA19-R
26-10-10 03	DA20-R
26-10-10 03	DA31-R
26-10-10 03	DA5-R
26-10-10 03	SC-P
26-10-20 02	CG7-R
26-10-20 02	DA33-R
26-20-10 03	CG1-R
26-20-10 03	CG2-R
26-20-10 03	DA19-R
26-20-10 03	DA20-R
27-24-10 02	CG2-R
27-24-10 02	DA19-R
27-24-10 02	DA20-R
27-24-10 02	DA35-R
27-24-10 02	DGE-P
27-24-10 02	DGF-P
27-24-10 03	CG2-R
27-24-10 03	DA19-R
27-24-10 03	DA20-R
27-24-10 03	DA35-R
27-24-10 03	DGE-P
27-24-10 03	DGF-P
27-33-00 05	CG6-R
27-33-00 05	CG7-R
27-33-00 05	DA21-R
27-33-00 05	DA31-R
27-33-00 05	DA32-R
27-33-00 05	DA33-R
27-33-00 05	DA35-R
27-33-00 05	DA5-R
27-33-00 05	DA6-R
27-33-00 05	SC-P
27-33-00 07	CG6-R
27-33-00 07	CG7-R
27-33-00 07	DA21-R
27-33-00 07	DA31-R
27-33-00 07	DA32-R
27-33-00 07	DA33-R

PART NUMBER CH-SECT-UNIT-FIG-ITEM	IDENT
MTC100KT2-1103	
27-33-00 07	DA35-R
27-33-00 07	DA5-R
27-33-00 07	DA6-R
27-33-00 07	SC-P
27-50-10 02	DA35-R
27-61-10 03	DA35-R
27-61-10 03	DA6-R
27-61-10 04	DA35-R
27-61-10 04	DA6-R
27-61-20 04	DA19-R
27-61-20 04	DA33-R
28-21-05 02	CG6-R
28-21-05 02	CG7-R
28-21-05 02	DA19-R
28-21-05 02	DA20-R
28-21-05 03	CG6-R
28-21-05 03	CG7-R
28-21-05 03	DA20-R
28-21-05 04	CG6-R
28-21-05 04	CG7-R
28-21-05 04	DA19-R
28-21-05 04	DA20-R
28-40-10 04	DA31-R
28-40-10 04	DA33-R
28-40-10 05	DA31-R
28-40-10 05	DA33-R
28-41-10 02	DA4-R
28-41-10 02	DA5-R
28-41-10 03	DA4-R
28-41-10 03	DA5-R
28-42-10 02	DA35-R
29-31-10 02	DA33-R
29-32-10 05	DGF-P
30-10-10 11	DA20-R
30-10-10 11	DA5-R
30-20-10 02	CG1-R
30-20-10 02	CG2-R
30-20-10 02	DA19-R
30-20-10 02	DA20-R
30-20-10 02	DGE-P
30-20-10 02	DGF-P
30-30-10 02	DA6-R
30-30-20 02	DA35-R
30-30-20 02	DA4-R
30-30-20 02	SC-P
30-40-15 07	CG6-R
30-40-15 07	CG7-R
30-40-15 07	DA19-R
30-40-15 07	DA20-R
30-40-15 07	DA31-R

PART NUMBER CH-SECT-UNIT-FIG-ITEM	IDENT
MTC100KT2-1103	
30-40-15 07	DA35-R
30-40-15 07	DA5-R
30-40-15 07	DA6-R
30-40-15 10	CG6-R
30-40-15 10	CG7-R
30-40-15 10	DA19-R
30-40-15 10	DA20-R
30-40-15 10	DA31-R
30-40-15 10	DA35-R
30-40-15 10	DA5-R
30-40-15 10	DA6-R
30-40-15 11	CG6-R
30-40-15 11	CG7-R
30-40-15 11	DA19-R
30-40-15 11	DA20-R
30-40-15 11	DA31-R
30-40-15 11	DA35-R
30-40-15 11	DA5-R
30-40-15 11	DA6-R
30-40-15 12	CG6-R
30-40-15 12	CG7-R
30-40-15 12	DA19-R
30-40-15 12	DA20-R
30-40-15 12	DA31-R
30-40-15 12	DA35-R
30-40-15 12	DA5-R
30-40-15 12	DA6-R
30-40-20 03	CG6-R
30-40-20 03	CG7-R
30-40-20 03	DA19-R
30-40-20 03	DA20-R
30-40-20 03	DA31-R
30-40-20 03	DA35-R
30-40-20 05	CG6-R
30-40-20 05	CG7-R
30-40-20 05	DA19-R
30-40-20 05	DA20-R
30-40-20 05	DA31-R
30-40-20 05	DA35-R
30-80-10 02	DA20-R
30-80-10 02	DA21-R
30-80-10 02	DA35-R
30-80-10 03	DA20-R
30-80-10 03	DA21-R
30-80-10 03	DA35-R
31-20-35 02	DA28-R
31-20-35 02	DA32-R
31-20-35 02	DA33-R
31-20-35 02	DA35-R
31-20-35 02	DGE-P

PART NUMBER CH-SECT-UNIT-FIG-ITEM	IDENT
MTC100KT2-1103	
31-20-35 02	DGF-P
31-20-35 03	DGF-P
31-20-60 02	DA31-R
31-20-60 02	DA33-R
31-20-60 02	DA35-R
31-50-01 04	CG6-R
31-50-01 04	CG7-R
31-50-01 04	CY1-P
31-50-01 04	DA31-R
31-50-01 04	DA33-R
31-50-01 07	CG6-R
31-50-01 07	CG7-R
31-50-01 07	CY1-P
31-50-01 07	DA31-R
31-50-01 07	DA33-R
31-50-01 08	CG6-R
31-50-01 08	CG7-R
31-50-01 08	CY1-P
31-50-01 08	DA31-R
31-50-01 08	DA33-R
31-50-01 09	CG6-R
31-50-01 09	CG7-R
31-50-01 09	CY1-P
31-50-01 09	DA31-R
31-50-01 09	DA33-R
31-50-01 14	CG6-R
31-50-01 14	CG7-R
31-50-01 14	CY1-P
31-50-01 14	DA31-R
31-50-01 14	DA33-R
31-50-01 14	DA6-R
32-60-10 04	CG6-R
32-60-10 04	DA33-R
32-60-10 04	DA35-R
32-60-10 04	DA5-R
32-60-10 04	DA6-R
32-60-10 04	DGE-P
32-60-20 02	DA35-R
33-10-05 05	CG6-R
33-10-05 05	CY1-P
33-10-05 05	CY3-P
33-10-05 05	DA19-R
33-10-05 05	DA20-R
33-10-05 05	DA21-R
33-10-05 05	DA31-R
33-10-05 05	DA32-R
33-10-05 05	SC-P
33-10-05 07	CG6-R
33-10-05 07	CY1-P
33-10-05 07	CY3-P

PART NUMBER CH-SECT-UNIT-FIG-ITEM	IDENT
MTC100KT2-1103	
33-10-05 07	DA19-R
33-10-05 07	DA20-R
33-10-05 07	DA21-R
33-10-05 07	DA31-R
33-10-05 07	DA32-R
33-10-05 07	SC-P
33-10-05 08	CG6-R
33-10-05 08	CY1-P
33-10-05 08	CY3-P
33-10-05 08	DA19-R
33-10-05 08	DA20-R
33-10-05 08	DA21-R
33-10-05 08	DA31-R
33-10-05 08	DA32-R
33-10-05 08	SC-P
33-10-05 09	CG6-R
33-10-05 09	CY1-P
33-10-05 09	CY3-P
33-10-05 09	DA19-R
33-10-05 09	DA20-R
33-10-05 09	DA21-R
33-10-05 09	DA31-R
33-10-05 09	DA32-R
33-10-05 09	SC-P
33-10-05 11	CG6-R
33-10-05 11	CY1-P
33-10-05 11	CY3-P
33-10-05 11	DA19-R
33-10-05 11	DA20-R
33-10-05 11	DA21-R
33-10-05 11	DA31-R
33-10-05 11	DA32-R
33-10-05 11	SC-P
33-10-10 31	CY3-P
33-10-20 04	CY1-P
33-10-20 04	CY3-P
33-10-20 04	DA32-R
33-10-20 04	DA6-R
33-10-20 07	CY1-P
33-10-20 07	CY3-P
33-10-20 07	DA32-R
33-10-20 07	DA6-R
33-10-20 08	CY1-P
33-10-20 08	CY3-P
33-10-20 08	DA32-R
33-10-20 08	DA6-R
33-30-05 08	SC-P
33-30-15 07	DA21-R
33-40-10 05	CG2-R
33-40-10 05	CG7-R

PART NUMBER CH-SECT-UNIT-FIG-ITEM	IDENT
MTC100KT2-1103	
33-40-10 05	DA20-R
33-40-20 04	CG6-R
33-40-20 04	CG7-R
33-40-20 04	DA19-R
33-40-20 04	DA20-R
33-40-30 03	CG6-R
33-40-30 03	DA21-R
33-50-10 09	CG7-R
34-13-01 04	DA19-R
34-13-01 04	DA20-R
34-13-01 08	DA19-R
34-13-01 08	DA20-R
49-60-10 05	DHE-P
49-60-30 06	CG2-R
49-60-30 08	CG2-R
49-60-30 08	DA4-R
49-60-30 09	CG2-R
49-60-30 09	DA4-R
49-60-30 11	CG2-R
49-60-30 11	DA4-R
52-70-10 02	DA31-R
73-20-01 05	CG1-R
73-20-01 05	DGE-P
73-20-10 03	CG1-R
73-20-10 03	DA4-R
73-20-10 03	DA5-R
77-10-10 02	DGE-P
77-10-10 02	DGF-P
79-30-10 02	DA31-R
79-30-10 02	DA33-R
79-30-10 02	DGE-P
79-30-10 02	DGF-P
80-10-10 04	CG1-R
80-10-10 04	CG2-R
80-10-10 04	CG6-R
80-10-10 04	CG7-R
80-10-10 04	DGE-P
80-10-10 04	DGF-P
MTC100KT2-1104	
21-20-10 03	CG7-R
21-20-10 03	DA20-R
21-30-10 02	DA21-R
21-30-10 04	DA21-R
21-31-10 07	DA20-R
21-31-10 07	DA31-R
21-31-10 07	DA32-R
21-31-10 07	DA33-R
21-31-10 07	DA35-R
21-60-10 08	CG1-R
21-60-10 08	CG2-R

PART NUMBER CH-SECT-UNIT-FIG-ITEM	IDENT
MTC100KT2-1104	
21-60-10 08	CG6-R
21-60-10 08	CG7-R
21-60-10 08	DA19-R
21-60-10 08	DA20-R
21-60-10 08	DA21-R
21-60-10 08	DA35-R
21-60-10 08	DA4-R
21-60-10 10	CG1-R
21-60-10 10	CG2-R
21-60-10 10	CG6-R
21-60-10 10	CG7-R
21-60-10 10	DA19-R
21-60-10 10	DA20-R
21-60-10 10	DA21-R
21-60-10 10	DA35-R
21-60-10 10	DA4-R
21-60-10 11	CG1-R
21-60-10 11	CG2-R
21-60-10 11	CG6-R
21-60-10 11	CG7-R
21-60-10 11	DA19-R
21-60-10 11	DA20-R
21-60-10 11	DA21-R
21-60-10 11	DA35-R
21-60-10 11	DA4-R
21-60-20 02	CG7-R
21-60-20 02	DA19-R
21-60-20 02	DA20-R
21-60-20 03	CG7-R
21-60-20 03	DA19-R
21-60-20 03	DA20-R
24-21-17 03	DA21-R
24-21-17 04	DA21-R
24-30-10 02	CG1-R
24-30-20 02	DA4-R
24-30-20 03	DA4-R
24-50-01 05	CG1-R
24-50-01 05	CG2-R
24-50-01 05	DA19-R
24-50-01 05	DA20-R
24-50-01 05	DA21-R
24-50-01 05	DA4-R
24-50-01 06	CG1-R
24-50-01 06	CG2-R
24-50-01 06	DA19-R
24-50-01 06	DA20-R
24-50-01 06	DA21-R
24-50-01 06	DA4-R
24-50-01 07	CG1-R
24-50-01 07	CG2-R

PART NUMBER CH-SECT-UNIT-FIG-ITEM	IDENT
MTC100KT2-1104	
24-50-01 07	DA19-R
24-50-01 07	DA20-R
24-50-01 07	DA21-R
24-50-01 07	DA4-R
26-10-10 03	CG1-R
26-10-10 03	CG2-R
26-10-10 03	DA19-R
26-10-10 03	DA20-R
26-10-10 03	DA31-R
26-10-10 03	DA5-R
26-10-20 02	CG7-R
26-10-20 02	DA33-R
26-20-10 03	CG1-R
26-20-10 03	CG2-R
26-20-10 03	CG5-R
26-20-10 03	DA19-R
26-20-10 03	DA20-R
27-24-10 02	CG2-R
27-24-10 02	DA19-R
27-24-10 02	DA20-R
27-24-10 02	DA35-R
27-24-10 02	DGE-P
27-24-10 02	DGF-P
27-24-10 03	CG2-R
27-24-10 03	DA19-R
27-24-10 03	DA20-R
27-24-10 03	DA35-R
27-24-10 03	DGE-P
27-24-10 03	DGF-P
27-33-00 05	CG6-R
27-33-00 05	CG7-R
27-33-00 05	DA21-R
27-33-00 05	DA31-R
27-33-00 05	DA32-R
27-33-00 05	DA33-R
27-33-00 05	DA35-R
27-33-00 05	DA5-R
27-33-00 05	DA6-R
27-33-00 07	CG6-R
27-33-00 07	CG7-R
27-33-00 07	DA21-R
27-33-00 07	DA31-R
27-33-00 07	DA32-R
27-33-00 07	DA33-R
27-33-00 07	DA35-R
27-33-00 07	DA5-R
27-33-00 07	DA6-R
27-50-10 02	DA35-R
27-61-10 03	DA35-R
27-61-10 03	DA6-R

PART NUMBER CH-SECT-UNIT-FIG-ITEM	IDENT
MTC100KT2-1104	
27-61-10 04	DA35-R
27-61-10 04	DA6-R
27-61-20 04	DA19-R
27-61-20 04	DA33-R
28-21-05 02	CG6-R
28-21-05 02	CG7-R
28-21-05 02	DA19-R
28-21-05 02	DA20-R
28-21-05 03	CG6-R
28-21-05 03	CG7-R
28-21-05 03	DA20-R
28-21-05 04	CG6-R
28-21-05 04	CG7-R
28-21-05 04	DA19-R
28-21-05 04	DA20-R
28-40-10 04	DA31-R
28-40-10 04	DA33-R
28-40-10 05	DA31-R
28-40-10 05	DA33-R
28-41-10 02	DA4-R
28-41-10 02	DA5-R
28-41-10 03	DA4-R
28-41-10 03	DA5-R
28-42-10 02	DA35-R
29-31-10 02	DA33-R
29-32-10 05	DGF-P
30-10-10 11	DA20-R
30-10-10 11	DA5-R
30-20-10 02	CG1-R
30-20-10 02	CG2-R
30-20-10 02	DA19-R
30-20-10 02	DA20-R
30-20-10 02	DGE-P
30-20-10 02	DGF-P
30-30-10 02	DA6-R
30-30-20 02	DA35-R
30-30-20 02	DA4-R
30-40-15 07	CG6-R
30-40-15 07	CG7-R
30-40-15 07	DA19-R
30-40-15 07	DA20-R
30-40-15 07	DA31-R
30-40-15 07	DA35-R
30-40-15 07	DA5-R
30-40-15 07	DA6-R
30-40-15 10	CG6-R
30-40-15 10	CG7-R
30-40-15 10	DA19-R
30-40-15 10	DA20-R
30-40-15 10	DA31-R

PART NUMBER CH-SECT-UNIT-FIG-ITEM	IDENT
MTC100KT2-1104	
30-40-15 10	DA35-R
30-40-15 10	DA5-R
30-40-15 10	DA6-R
30-40-15 11	CG6-R
30-40-15 11	CG7-R
30-40-15 11	DA19-R
30-40-15 11	DA20-R
30-40-15 11	DA31-R
30-40-15 11	DA35-R
30-40-15 11	DA5-R
30-40-15 11	DA6-R
30-40-15 12	CG6-R
30-40-15 12	CG7-R
30-40-15 12	DA19-R
30-40-15 12	DA20-R
30-40-15 12	DA31-R
30-40-15 12	DA35-R
30-40-15 12	DA5-R
30-40-15 12	DA6-R
30-40-20 03	CG6-R
30-40-20 03	CG7-R
30-40-20 03	DA19-R
30-40-20 03	DA20-R
30-40-20 03	DA31-R
30-40-20 03	DA35-R
30-40-20 05	CG6-R
30-40-20 05	CG7-R
30-40-20 05	DA19-R
30-40-20 05	DA20-R
30-40-20 05	DA31-R
30-40-20 05	DA35-R
30-80-10 02	DA20-R
30-80-10 02	DA21-R
30-80-10 02	DA35-R
30-80-10 03	DA20-R
30-80-10 03	DA21-R
30-80-10 03	DA35-R
31-20-35 02	DA28-R
31-20-35 02	DA32-R
31-20-35 02	DA33-R
31-20-35 02	DA35-R
31-20-35 02	DGE-P
31-20-35 02	DGF-P
31-20-35 03	DA28-R
31-20-35 03	DA32-R
31-20-35 03	DA33-R
31-20-35 03	DA35-R
31-20-35 03	DGF-P
31-20-60 02	DA31-R
31-20-60 02	DA33-R

PART NUMBER CH-SECT-UNIT-FIG-ITEM	IDENT
MTC100KT2-1104	
31-20-60 02	DA35-R
31-50-01 04	CG6-R
31-50-01 04	CG7-R
31-50-01 04	CY1-P
31-50-01 04	DA31-R
31-50-01 04	DA33-R
31-50-01 07	CG6-R
31-50-01 07	CG7-R
31-50-01 07	CY1-P
31-50-01 07	DA31-R
31-50-01 07	DA33-R
31-50-01 08	CG6-R
31-50-01 08	CG7-R
31-50-01 08	CY1-P
31-50-01 08	DA31-R
31-50-01 08	DA33-R
31-50-01 09	CG6-R
31-50-01 09	CG7-R
31-50-01 09	CY1-P
31-50-01 09	DA31-R
31-50-01 09	DA33-R
31-50-01 14	CG6-R
31-50-01 14	CG7-R
31-50-01 14	CY1-P
31-50-01 14	DA31-R
31-50-01 14	DA33-R
31-50-01 14	DA6-R
32-60-10 04	CG6-R
32-60-10 04	DA33-R
32-60-10 04	DA35-R
32-60-10 04	DA5-R
32-60-10 04	DA6-R
32-60-10 04	DGE-P
32-60-20 02	DA35-R
33-10-05 05	CG6-R
33-10-05 05	CY1-P
33-10-05 05	CY3-P
33-10-05 05	DA19-R
33-10-05 05	DA20-R
33-10-05 05	DA21-R
33-10-05 05	DA31-R
33-10-05 05	DA32-R
33-10-05 07	CG6-R
33-10-05 07	CY1-P
33-10-05 07	CY3-P
33-10-05 07	DA19-R
33-10-05 07	DA20-R
33-10-05 07	DA21-R
33-10-05 07	DA31-R
33-10-05 07	DA32-R

PART NUMBER CH-SECT-UNIT-FIG-ITEM	IDENT
MTC100KT2-1104	
33-10-05 08	CG6-R
33-10-05 08	CY1-P
33-10-05 08	CY3-P
33-10-05 08	DA19-R
33-10-05 08	DA20-R
33-10-05 08	DA21-R
33-10-05 08	DA31-R
33-10-05 08	DA32-R
33-10-05 09	CG6-R
33-10-05 09	CY1-P
33-10-05 09	CY3-P
33-10-05 09	DA19-R
33-10-05 09	DA20-R
33-10-05 09	DA21-R
33-10-05 09	DA31-R
33-10-05 09	DA32-R
33-10-05 11	CG6-R
33-10-05 11	CY1-P
33-10-05 11	CY3-P
33-10-05 11	DA19-R
33-10-05 11	DA20-R
33-10-05 11	DA21-R
33-10-05 11	DA31-R
33-10-05 11	DA32-R
33-10-10 31	CY3-P
33-10-20 04	CY1-P
33-10-20 04	CY3-P
33-10-20 04	DA32-R
33-10-20 04	DA6-R
33-10-20 07	CY1-P
33-10-20 07	CY3-P
33-10-20 07	DA32-R
33-10-20 07	DA6-R
33-10-20 08	CY1-P
33-10-20 08	CY3-P
33-10-20 08	DA32-R
33-10-20 08	DA6-R
33-30-15 07	DA21-R
33-40-10 05	CG2-R
33-40-10 05	CG7-R
33-40-10 05	DA20-R
33-40-20 04	CG6-R
33-40-20 04	CG7-R
33-40-20 04	DA19-R
33-40-20 04	DA20-R
33-40-30 03	CG6-R
33-40-30 03	DA21-R
33-50-10 09	CG7-R
34-13-01 04	DA19-R
34-13-01 04	DA20-R

PART NUMBER CH-SECT-UNIT-FIG-ITEM	IDENT
MTC100KT2-1104	
34-13-01 08	DA19-R
34-13-01 08	DA20-R
49-60-10 05	DHE-P
49-60-30 06	CG2-R
49-60-30 08	CG2-R
49-60-30 08	DA4-R
49-60-30 09	CG2-R
49-60-30 09	DA4-R
49-60-30 11	CG2-R
49-60-30 11	DA4-R
52-70-10 02	DA31-R
73-20-01 05	CG1-R
73-20-01 05	DGE-P
73-20-10 03	CG1-R
73-20-10 03	DA4-R
73-20-10 03	DA5-R
77-10-10 02	DGE-P
77-10-10 02	DGF-P
79-30-10 02	DA31-R
79-30-10 02	DA33-R
79-30-10 02	DGE-P
79-30-10 02	DGF-P
80-10-10 04	CG1-R
80-10-10 04	CG2-R
80-10-10 04	CG6-R
80-10-10 04	CG7-R
80-10-10 04	DGE-P
80-10-10 04	DGF-P
MTC100YC1-001	
21-20-10 03	CG7-P
21-20-10 03	DA20-P
21-30-10 04	DA21-P
21-31-10 07	DA20-P
21-31-10 07	DA31-P
21-31-10 07	DA32-P
21-31-10 07	DA33-P
21-31-10 07	DA35-P
21-60-10 11	CG1-P
21-60-10 11	CG2-P
21-60-10 11	CG6-P
21-60-10 11	CG7-P
21-60-10 11	DA19-P
21-60-10 11	DA20-P
21-60-10 11	DA21-P
21-60-10 11	DA35-P
21-60-10 11	DA4-P
21-60-20 03	CG7-P
21-60-20 03	DA19-P
21-60-20 03	DA20-P
24-21-17 04	DA21-P

PART NUMBER CH-SECT-UNIT-FIG-ITEM	IDENT
MTC100YC1-001	
24-30-10 02	CG1-P
24-30-20 02	DA4-P
24-30-20 03	DA4-P
24-50-01 06	CG1-P
24-50-01 06	CG2-P
24-50-01 06	DA19-P
24-50-01 06	DA20-P
24-50-01 06	DA21-P
24-50-01 06	DA4-P
24-50-01 07	CG1-P
24-50-01 07	CG2-P
24-50-01 07	DA19-P
24-50-01 07	DA20-P
24-50-01 07	DA21-P
24-50-01 07	DA4-P
26-10-10 03	CG1-P
26-10-10 03	CG2-P
26-10-10 03	DA19-P
26-10-10 03	DA20-P
26-10-10 03	DA31-P
26-10-10 03	DA5-P
26-10-10 03	SC-R
26-10-20 02	CG7-P
26-10-20 02	DA33-P
26-20-10 03	CG1-P
26-20-10 03	CG2-P
26-20-10 03	DA19-P
26-20-10 03	DA20-P
27-24-10 03	CG2-P
27-24-10 03	DA19-P
27-24-10 03	DA20-P
27-24-10 03	DA35-P
27-24-10 03	DGE-R
27-24-10 03	DGF-R
27-33-00 07	CG6-P
27-33-00 07	CG7-P
27-33-00 07	DA21-P
27-33-00 07	DA31-P
27-33-00 07	DA32-P
27-33-00 07	DA33-P
27-33-00 07	DA35-P
27-33-00 07	DA5-P
27-33-00 07	DA6-P
27-33-00 07	SC-R
27-50-10 02	DA35-P
27-61-10 04	DA35-P
27-61-10 04	DA6-P
27-61-10 08	DA35-P
27-61-10 08	DA5-P
27-61-10 08	DA6-P

PART NUMBER CH-SECT-UNIT-FIG-ITEM	IDENT
MTC100YC1-001	
28-21-05 04	CG6-P
28-21-05 04	CG7-P
28-21-05 04	DA19-P
28-21-05 04	DA20-P
28-40-10 04	DA31-P
28-40-10 04	DA33-P
28-40-10 05	DA31-P
28-40-10 05	DA33-P
28-41-10 02	DA4-P
28-41-10 02	DA5-P
28-42-10 02	DA35-P
29-31-10 02	DA33-P
29-32-10 05	DGF-R
30-10-10 11	DA20-P
30-20-10 02	CG1-P
30-20-10 02	CG2-P
30-20-10 02	DA19-P
30-20-10 02	DA20-P
30-20-10 02	DGE-R
30-20-10 02	DGF-R
30-30-10 02	DA6-P
30-30-20 02	DA35-P
30-30-20 02	DA4-P
30-30-20 02	SC-R
30-40-15 11	CG6-P
30-40-15 11	CG7-P
30-40-15 11	DA19-P
30-40-15 11	DA20-P
30-40-15 11	DA31-P
30-40-15 11	DA35-P
30-40-15 11	DA5-P
30-40-15 11	DA6-P
30-40-15 12	CG6-P
30-40-15 12	CG7-P
30-40-15 12	DA19-P
30-40-15 12	DA20-P
30-40-15 12	DA31-P
30-40-15 12	DA35-P
30-40-15 12	DA5-P
30-40-15 12	DA6-P
30-40-20 05	CG6-P
30-40-20 05	CG7-P
30-40-20 05	DA19-P
30-40-20 05	DA20-P
30-40-20 05	DA31-P
30-40-20 05	DA35-P
30-80-10 03	DA20-P
30-80-10 03	DA21-P
30-80-10 03	DA35-P
31-20-35 03	DA32-P

PART NUMBER CH-SECT-UNIT-FIG-ITEM	IDENT
MTC100YC1-001	
31-20-35 03	DA33-P
31-20-35 03	DA35-P
31-20-35 03	DGF-R
31-20-60 02	DA31-P
31-20-60 02	DA33-P
31-20-60 02	DA35-P
31-50-01 09	CG6-P
31-50-01 09	CG7-P
31-50-01 09	CY1-R
31-50-01 09	DA31-P
31-50-01 09	DA33-P
31-50-01 14	CG6-P
31-50-01 14	CG7-P
31-50-01 14	CY1-R
31-50-01 14	DA31-P
31-50-01 14	DA33-P
31-50-01 14	DA6-P
32-60-10 04	CG6-P
32-60-10 04	DA33-P
32-60-10 04	DA35-P
32-60-10 04	DA5-P
32-60-10 04	DA6-P
32-60-10 04	DGE-R
32-60-20 02	DA35-P
33-10-05 09	CG6-P
33-10-05 09	CY1-R
33-10-05 09	CY3-R
33-10-05 09	DA19-P
33-10-05 09	DA20-P
33-10-05 09	DA21-P
33-10-05 09	DA31-P
33-10-05 09	DA32-P
33-10-05 09	SC-R
33-10-05 11	CG6-P
33-10-05 11	CY1-R
33-10-05 11	CY3-R
33-10-05 11	DA19-P
33-10-05 11	DA20-P
33-10-05 11	DA21-P
33-10-05 11	DA31-P
33-10-05 11	DA32-P
33-10-05 11	SC-R
33-10-20 08	CY1-R
33-10-20 08	CY3-R
33-10-20 08	DA32-P
33-10-20 08	DA6-P
33-20-10 10	CG6-P
33-20-10 10	DA21-P
33-30-05 08	SC-R
33-40-10 05	CG2-P

PART NUMBER CH-SECT-UNIT-FIG-ITEM	IDENT
MTC100YC1-001	
33-40-10 05	CG7-P
33-40-10 05	DA20-P
33-40-10 06	CG2-P
33-40-10 06	CG7-P
33-40-10 06	DA20-P
33-40-20 04	CG6-P
33-40-20 04	CG7-P
33-40-20 04	DA19-P
33-40-20 04	DA20-P
33-40-30 03	CG6-P
33-40-30 03	DA21-P
33-50-10 09	CG7-P
34-13-01 04	DA19-P
34-13-01 04	DA20-P
34-13-01 08	DA19-P
34-13-01 08	DA20-P
49-60-10 05	DHE-R
49-60-30 08	CG2-P
49-60-30 08	DA4-P
52-70-10 02	DA31-P
73-20-01 05	CG1-P
73-20-01 05	DGE-R
73-20-02 05	CG7-P
73-20-02 05	CG7-R
73-20-10 03	CG1-P
73-20-10 03	DA4-P
73-20-10 03	DA5-P
77-10-10 02	DGE-R
77-10-10 02	DGF-R
79-30-10 02	DA31-P
79-30-10 02	DA33-P
79-30-10 02	DGE-R
79-30-10 02	DGF-R
80-10-10 04	CG1-P
80-10-10 04	CG2-P
80-10-10 04	CG6-P
80-10-10 04	CG7-P
80-10-10 04	DGE-R
80-10-10 04	DGF-R
MTC100YC1-002	
21-20-10 03	CG7-P
21-20-10 03	DA20-P
21-30-10 04	DA21-P
21-31-10 07	DA20-P
21-31-10 07	DA31-P
21-31-10 07	DA32-P
21-31-10 07	DA33-P
21-31-10 07	DA35-P
21-60-10 11	CG1-P
21-60-10 11	CG2-P

PART NUMBER CH-SECT-UNIT-FIG-ITEM	IDENT
MTC100YC1-002	
21-60-10 11	CG6-P
21-60-10 11	CG7-P
21-60-10 11	DA19-P
21-60-10 11	DA20-P
21-60-10 11	DA21-P
21-60-10 11	DA35-P
21-60-10 11	DA4-P
21-60-20 03	CG7-P
21-60-20 03	DA19-P
21-60-20 03	DA20-P
24-21-17 04	DA21-P
24-30-10 02	CG1-P
24-30-20 02	DA4-P
24-30-20 03	DA4-P
24-50-01 06	CG1-P
24-50-01 06	CG2-P
24-50-01 06	DA19-P
24-50-01 06	DA20-P
24-50-01 06	DA21-P
24-50-01 06	DA4-P
24-50-01 07	CG1-P
24-50-01 07	CG2-P
24-50-01 07	DA19-P
24-50-01 07	DA20-P
24-50-01 07	DA21-P
24-50-01 07	DA4-P
26-10-10 03	CG1-P
26-10-10 03	CG2-P
26-10-10 03	DA19-P
26-10-10 03	DA20-P
26-10-10 03	DA31-P
26-10-10 03	DA5-P
26-10-10 03	SC-R
26-10-20 02	CG7-P
26-10-20 02	DA33-P
26-20-10 03	CG1-P
26-20-10 03	CG2-P
26-20-10 03	DA19-P
26-20-10 03	DA20-P
27-24-10 03	CG2-P
27-24-10 03	DA19-P
27-24-10 03	DA20-P
27-24-10 03	DA35-P
27-24-10 03	DGE-R
27-24-10 03	DGF-R
27-33-00 07	CG6-P
27-33-00 07	CG7-P
27-33-00 07	DA21-P
27-33-00 07	DA31-P
27-33-00 07	DA32-P

PART NUMBER CH-SECT-UNIT-FIG-ITEM	IDENT
MTC100YC1-002	
27-33-00 07	DA33-P
27-33-00 07	DA35-P
27-33-00 07	DA5-P
27-33-00 07	DA6-P
27-33-00 07	SC-R
27-50-10 02	DA35-P
27-61-10 04	DA35-P
27-61-10 04	DA6-P
27-61-10 08	DA35-P
27-61-10 08	DA5-P
27-61-10 08	DA6-P
28-21-05 04	CG6-P
28-21-05 04	CG7-P
28-21-05 04	DA19-P
28-21-05 04	DA20-P
28-40-10 04	DA31-P
28-40-10 04	DA33-P
28-40-10 05	DA31-P
28-40-10 05	DA33-P
28-41-10 02	DA4-P
28-41-10 02	DA5-P
28-42-10 02	DA35-P
29-31-10 02	DA33-P
29-32-10 05	DGF-R
30-10-10 11	DA20-P
30-20-10 02	CG1-P
30-20-10 02	CG2-P
30-20-10 02	DA19-P
30-20-10 02	DA20-P
30-20-10 02	DGE-R
30-20-10 02	DGF-R
30-30-10 02	DA6-P
30-30-20 02	DA35-P
30-30-20 02	DA4-P
30-30-20 02	SC-R
30-40-15 11	CG6-P
30-40-15 11	CG7-P
30-40-15 11	DA19-P
30-40-15 11	DA20-P
30-40-15 11	DA31-P
30-40-15 11	DA35-P
30-40-15 11	DA5-P
30-40-15 11	DA6-P
30-40-15 12	CG6-P
30-40-15 12	CG7-P
30-40-15 12	DA19-P
30-40-15 12	DA20-P
30-40-15 12	DA31-P
30-40-15 12	DA35-P
30-40-15 12	DA5-P

PART NUMBER CH-SECT-UNIT-FIG-ITEM	IDENT
MTC100YC1-002	
30-40-15 12	DA6-P
30-40-20 05	CG6-P
30-40-20 05	CG7-P
30-40-20 05	DA19-P
30-40-20 05	DA20-P
30-40-20 05	DA31-P
30-40-20 05	DA35-P
30-80-10 03	DA20-P
30-80-10 03	DA21-P
30-80-10 03	DA35-P
31-20-35 03	DA32-P
31-20-35 03	DA33-P
31-20-35 03	DA35-P
31-20-35 03	DGF-R
31-20-60 02	DA31-P
31-20-60 02	DA33-P
31-20-60 02	DA35-P
31-50-01 09	CG6-P
31-50-01 09	CG7-P
31-50-01 09	CY1-R
31-50-01 09	DA31-P
31-50-01 09	DA33-P
31-50-01 14	CG6-P
31-50-01 14	CG7-P
31-50-01 14	CY1-R
31-50-01 14	DA31-P
31-50-01 14	DA33-P
31-50-01 14	DA6-P
32-60-10 04	CG6-P
32-60-10 04	DA33-P
32-60-10 04	DA35-P
32-60-10 04	DA5-P
32-60-10 04	DA6-P
32-60-10 04	DGE-R
32-60-20 02	DA35-P
33-10-05 09	CG6-P
33-10-05 09	CY1-R
33-10-05 09	CY3-R
33-10-05 09	DA19-P
33-10-05 09	DA20-P
33-10-05 09	DA21-P
33-10-05 09	DA31-P
33-10-05 09	DA32-P
33-10-05 09	SC-R
33-10-05 11	CG6-P
33-10-05 11	CY1-R
33-10-05 11	CY3-R
33-10-05 11	DA19-P
33-10-05 11	DA20-P
33-10-05 11	DA21-P

PART NUMBER CH-SECT-UNIT-FIG-ITEM	IDENT
MTC100YC1-002	
33-10-05 11	DA31-P
33-10-05 11	DA32-P
33-10-05 11	SC-R
33-10-20 08	CY1-R
33-10-20 08	CY3-R
33-10-20 08	DA32-P
33-10-20 08	DA6-P
33-20-10 10	CG6-P
33-20-10 10	DA21-P
33-30-05 08	SC-R
33-40-10 05	CG2-P
33-40-10 05	CG7-P
33-40-10 05	DA20-P
33-40-10 06	CG2-P
33-40-10 06	CG7-P
33-40-10 06	DA20-P
33-40-20 04	CG6-P
33-40-20 04	CG7-P
33-40-20 04	DA19-P
33-40-20 04	DA20-P
33-40-30 03	CG6-P
33-40-30 03	DA21-P
33-50-10 09	CG7-P
34-13-01 04	DA19-P
34-13-01 04	DA20-P
34-13-01 08	DA19-P
34-13-01 08	DA20-P
49-60-10 05	DHE-R
49-60-30 08	CG2-P
49-60-30 08	DA4-P
52-70-10 02	DA31-P
73-20-01 05	CG1-P
73-20-01 05	DGE-R
73-20-02 05	CG7-P
73-20-02 05	CG7-R
73-20-10 03	CG1-P
73-20-10 03	DA4-P
73-20-10 03	DA5-P
77-10-10 02	DGE-R
77-10-10 02	DGF-R
79-30-10 02	DA31-P
79-30-10 02	DA33-P
79-30-10 02	DGE-R
79-30-10 02	DGF-R
80-10-10 04	CG1-P
80-10-10 04	CG2-P
80-10-10 04	CG6-P
80-10-10 04	CG7-P
80-10-10 04	DGE-R
80-10-10 04	DGF-R

PART NUMBER CH-SECT-UNIT-FIG-ITEM	IDENT
MTC100YC1-003	
21-20-10 03	CG7-R
21-20-10 03	DA20-R
21-30-10 04	DA21-R
21-31-10 07	DA20-R
21-31-10 07	DA31-R
21-31-10 07	DA32-R
21-31-10 07	DA33-R
21-31-10 07	DA35-R
21-60-10 11	CG1-R
21-60-10 11	CG2-R
21-60-10 11	CG6-R
21-60-10 11	CG7-R
21-60-10 11	DA19-R
21-60-10 11	DA20-R
21-60-10 11	DA21-R
21-60-10 11	DA35-R
21-60-10 11	DA4-R
21-60-20 03	CG7-R
21-60-20 03	DA19-R
21-60-20 03	DA20-R
24-21-17 04	DA21-R
24-30-10 02	CG1-R
24-30-20 02	DA4-R
24-30-20 03	DA4-R
24-50-01 06	CG1-R
24-50-01 06	CG2-R
24-50-01 06	DA19-R
24-50-01 06	DA20-R
24-50-01 06	DA21-R
24-50-01 06	DA4-R
24-50-01 07	CG1-R
24-50-01 07	CG2-R
24-50-01 07	DA19-R
24-50-01 07	DA20-R
24-50-01 07	DA21-R
24-50-01 07	DA4-R
26-10-10 03	CG1-R
26-10-10 03	CG2-R
26-10-10 03	DA19-R
26-10-10 03	DA20-R
26-10-10 03	DA31-R
26-10-10 03	DA5-R
26-10-10 03	SC-P
26-10-20 02	CG7-R
26-10-20 02	DA33-R
26-20-10 03	CG1-R
26-20-10 03	CG2-R
26-20-10 03	DA19-R
26-20-10 03	DA20-R
27-24-10 03	CG2-R

PART NUMBER CH-SECT-UNIT-FIG-ITEM	IDENT
MTC100YC1-003	
27-24-10 03	DA19-R
27-24-10 03	DA20-R
27-24-10 03	DA35-R
27-24-10 03	DGE-P
27-24-10 03	DGF-P
27-33-00 07	CG6-R
27-33-00 07	CG7-R
27-33-00 07	DA21-R
27-33-00 07	DA31-R
27-33-00 07	DA32-R
27-33-00 07	DA33-R
27-33-00 07	DA35-R
27-33-00 07	DA5-R
27-33-00 07	DA6-R
27-33-00 07	SC-P
27-50-10 02	DA35-R
27-61-10 04	DA35-R
27-61-10 04	DA6-R
27-61-10 08	DA35-R
27-61-10 08	DA5-R
27-61-10 08	DA6-R
28-21-05 04	CG6-R
28-21-05 04	CG7-R
28-21-05 04	DA19-R
28-21-05 04	DA20-R
28-40-10 04	DA31-R
28-40-10 04	DA33-R
28-40-10 05	DA31-R
28-40-10 05	DA33-R
28-41-10 02	DA4-R
28-41-10 02	DA5-R
28-42-10 02	DA35-R
29-31-10 02	DA33-R
29-32-10 05	DGF-P
30-10-10 11	DA20-R
30-10-10 11	DA5-P
30-10-10 11	DA5-R
30-20-10 02	CG1-R
30-20-10 02	CG2-R
30-20-10 02	DA19-R
30-20-10 02	DA20-R
30-20-10 02	DGE-P
30-20-10 02	DGF-P
30-30-10 02	DA6-R
30-30-20 02	DA35-R
30-30-20 02	DA4-R
30-30-20 02	SC-P
30-40-15 11	CG6-R
30-40-15 11	CG7-R
30-40-15 11	DA19-R

PART NUMBER CH-SECT-UNIT-FIG-ITEM	IDENT
MTC100YC1-003	
30-40-15 11	DA20-R
30-40-15 11	DA31-R
30-40-15 11	DA35-R
30-40-15 11	DA5-R
30-40-15 11	DA6-R
30-40-15 12	CG6-R
30-40-15 12	CG7-R
30-40-15 12	DA19-R
30-40-15 12	DA20-R
30-40-15 12	DA31-R
30-40-15 12	DA35-R
30-40-15 12	DA5-R
30-40-15 12	DA6-R
30-40-20 05	CG6-R
30-40-20 05	CG7-R
30-40-20 05	DA19-R
30-40-20 05	DA20-R
30-40-20 05	DA31-R
30-40-20 05	DA35-R
30-80-10 03	DA20-R
30-80-10 03	DA21-R
30-80-10 03	DA35-R
31-20-35 03	DA32-R
31-20-35 03	DA33-R
31-20-35 03	DA35-R
31-20-35 03	DGF-P
31-20-60 02	DA31-R
31-20-60 02	DA33-R
31-20-60 02	DA35-R
31-50-01 09	CG6-R
31-50-01 09	CG7-R
31-50-01 09	CY1-P
31-50-01 09	DA31-R
31-50-01 09	DA33-R
31-50-01 14	CG6-R
31-50-01 14	CG7-R
31-50-01 14	CY1-P
31-50-01 14	DA31-R
31-50-01 14	DA33-R
31-50-01 14	DA6-R
32-60-10 04	CG6-R
32-60-10 04	DA33-R
32-60-10 04	DA35-R
32-60-10 04	DA5-R
32-60-10 04	DA6-R
32-60-10 04	DGE-P
32-60-20 02	DA35-R
33-10-05 09	CG6-R
33-10-05 09	CY1-P
33-10-05 09	CY3-P

PART NUMBER CH-SECT-UNIT-FIG-ITEM	IDENT
MTC100YC1-003	
33-10-05 09	DA19-R
33-10-05 09	DA20-R
33-10-05 09	DA21-R
33-10-05 09	DA31-R
33-10-05 09	DA32-R
33-10-05 09	SC-P
33-10-05 11	CG6-R
33-10-05 11	CY1-P
33-10-05 11	CY3-P
33-10-05 11	DA19-R
33-10-05 11	DA20-R
33-10-05 11	DA21-R
33-10-05 11	DA31-R
33-10-05 11	DA32-R
33-10-05 11	SC-P
33-10-20 08	CY1-P
33-10-20 08	CY3-P
33-10-20 08	DA32-R
33-10-20 08	DA6-R
33-20-10 10	CG6-R
33-20-10 10	DA21-R
33-30-05 08	SC-P
33-40-10 05	CG2-R
33-40-10 05	CG7-R
33-40-10 05	DA20-R
33-40-10 06	CG2-R
33-40-10 06	CG7-R
33-40-10 06	DA20-R
33-40-20 04	CG6-R
33-40-20 04	CG7-R
33-40-20 04	DA19-R
33-40-20 04	DA20-R
33-40-30 03	CG6-R
33-40-30 03	DA21-R
33-50-10 09	CG7-R
34-13-01 04	DA19-R
34-13-01 04	DA20-R
34-13-01 08	DA19-R
34-13-01 08	DA20-R
49-60-10 05	DHE-P
49-60-30 08	CG2-R
49-60-30 08	DA4-R
52-70-10 02	DA31-R
73-20-01 05	CG1-R
73-20-01 05	DGE-P
73-20-10 03	CG1-R
73-20-10 03	DA4-R
73-20-10 03	DA5-R
77-10-10 02	DGE-P
77-10-10 02	DGF-P

PART NUMBER CH-SECT-UNIT-FIG-ITEM	IDENT
MTC100YC1-003	
79-30-10 02	DA31-R
79-30-10 02	DA33-R
79-30-10 02	DGE-P
79-30-10 02	DGF-P
80-10-10 04	CG1-R
80-10-10 04	CG2-R
80-10-10 04	CG6-R
80-10-10 04	CG7-R
80-10-10 04	DGE-P
80-10-10 04	DGF-P
MTC100YC1-004	
21-20-10 03	CG7-R
21-20-10 03	DA20-R
21-30-10 04	DA21-R
21-31-10 07	DA20-R
21-31-10 07	DA31-R
21-31-10 07	DA32-R
21-31-10 07	DA33-R
21-31-10 07	DA35-R
21-60-10 11	CG1-R
21-60-10 11	CG2-R
21-60-10 11	CG6-R
21-60-10 11	CG7-R
21-60-10 11	DA19-R
21-60-10 11	DA20-R
21-60-10 11	DA21-R
21-60-10 11	DA35-R
21-60-10 11	DA4-R
21-60-20 03	CG7-R
21-60-20 03	DA19-R
21-60-20 03	DA20-R
24-21-17 04	DA21-R
24-30-10 02	CG1-R
24-30-20 02	DA4-R
24-30-20 03	DA4-R
24-50-01 06	CG1-R
24-50-01 06	CG2-R
24-50-01 06	DA19-R
24-50-01 06	DA20-R
24-50-01 06	DA21-R
24-50-01 06	DA4-R
24-50-01 07	CG1-R
24-50-01 07	CG2-R
24-50-01 07	DA19-R
24-50-01 07	DA20-R
24-50-01 07	DA21-R
24-50-01 07	DA4-R
26-10-10 03	CG1-R
26-10-10 03	CG2-R
26-10-10 03	DA19-R

PART NUMBER CH-SECT-UNIT-FIG-ITEM	IDENT
MTC100YC1-004	
26-10-10 03	DA20-R
26-10-10 03	DA31-R
26-10-10 03	DA5-R
26-10-10 03	SC-P
26-10-20 02	CG7-R
26-10-20 02	DA33-R
26-20-10 03	CG1-R
26-20-10 03	CG2-R
26-20-10 03	DA19-R
26-20-10 03	DA20-R
27-24-10 03	CG2-R
27-24-10 03	DA19-R
27-24-10 03	DA20-R
27-24-10 03	DA35-R
27-24-10 03	DGE-P
27-24-10 03	DGF-P
27-33-00 07	CG6-R
27-33-00 07	CG7-R
27-33-00 07	DA21-R
27-33-00 07	DA31-R
27-33-00 07	DA32-R
27-33-00 07	DA33-R
27-33-00 07	DA35-R
27-33-00 07	DA5-R
27-33-00 07	DA6-R
27-33-00 07	SC-P
27-50-10 02	DA35-R
27-61-10 04	DA35-R
27-61-10 04	DA6-R
27-61-10 08	DA35-R
27-61-10 08	DA5-R
27-61-10 08	DA6-R
28-21-05 04	CG6-R
28-21-05 04	CG7-R
28-21-05 04	DA19-R
28-21-05 04	DA20-R
28-40-10 04	DA31-R
28-40-10 04	DA33-R
28-40-10 05	DA31-R
28-40-10 05	DA33-R
28-41-10 02	DA4-R
28-41-10 02	DA5-R
28-42-10 02	DA35-R
29-31-10 02	DA33-R
29-32-10 05	DGF-P
30-10-10 11	DA20-R
30-10-10 11	DA5-P
30-10-10 11	DA5-R
30-20-10 02	CG1-R
30-20-10 02	CG2-R

PART NUMBER CH-SECT-UNIT-FIG-ITEM	IDENT
MTC100YC1-004	
30-20-10 02	DA19-R
30-20-10 02	DA20-R
30-20-10 02	DGE-P
30-20-10 02	DGF-P
30-30-10 02	DA6-R
30-30-20 02	DA35-R
30-30-20 02	DA4-R
30-30-20 02	SC-P
30-40-15 11	CG6-R
30-40-15 11	CG7-R
30-40-15 11	DA19-R
30-40-15 11	DA20-R
30-40-15 11	DA31-R
30-40-15 11	DA35-R
30-40-15 11	DA5-R
30-40-15 11	DA6-R
30-40-15 12	CG6-R
30-40-15 12	CG7-R
30-40-15 12	DA19-R
30-40-15 12	DA20-R
30-40-15 12	DA31-R
30-40-15 12	DA35-R
30-40-15 12	DA5-R
30-40-15 12	DA6-R
30-40-20 05	CG6-R
30-40-20 05	CG7-R
30-40-20 05	DA19-R
30-40-20 05	DA20-R
30-40-20 05	DA31-R
30-40-20 05	DA35-R
30-80-10 03	DA20-R
30-80-10 03	DA21-R
30-80-10 03	DA35-R
31-20-35 03	DA32-R
31-20-35 03	DA33-R
31-20-35 03	DA35-R
31-20-35 03	DGF-P
31-20-60 02	DA31-R
31-20-60 02	DA33-R
31-20-60 02	DA35-R
31-50-01 09	CG6-R
31-50-01 09	CG7-R
31-50-01 09	CY1-P
31-50-01 09	DA31-R
31-50-01 09	DA33-R
31-50-01 14	CG6-R
31-50-01 14	CG7-R
31-50-01 14	CY1-P
31-50-01 14	DA31-R
31-50-01 14	DA33-R

PART NUMBER CH-SECT-UNIT-FIG-ITEM	IDENT
MTC100YC1-004	
31-50-01 14	DA6-R
32-60-10 04	CG6-R
32-60-10 04	DA33-R
32-60-10 04	DA35-R
32-60-10 04	DA5-R
32-60-10 04	DA6-R
32-60-10 04	DGE-P
32-60-20 02	DA35-R
33-10-05 09	CG6-R
33-10-05 09	CY1-P
33-10-05 09	CY3-P
33-10-05 09	DA19-R
33-10-05 09	DA20-R
33-10-05 09	DA21-R
33-10-05 09	DA31-R
33-10-05 09	DA32-R
33-10-05 09	SC-P
33-10-05 11	CG6-R
33-10-05 11	CY1-P
33-10-05 11	CY3-P
33-10-05 11	DA19-R
33-10-05 11	DA20-R
33-10-05 11	DA21-R
33-10-05 11	DA31-R
33-10-05 11	DA32-R
33-10-05 11	SC-P
33-10-20 08	CY1-P
33-10-20 08	CY3-P
33-10-20 08	DA32-R
33-10-20 08	DA6-R
33-20-10 10	CG6-R
33-20-10 10	DA21-R
33-30-05 08	SC-P
33-40-10 05	CG2-R
33-40-10 05	CG7-R
33-40-10 05	DA20-R
33-40-10 06	CG2-R
33-40-10 06	CG7-R
33-40-10 06	DA20-R
33-40-20 04	CG6-R
33-40-20 04	CG7-R
33-40-20 04	DA19-R
33-40-20 04	DA20-R
33-40-30 03	CG6-R
33-40-30 03	DA21-R
33-50-10 09	CG7-R
34-13-01 04	DA19-R
34-13-01 04	DA20-R
34-13-01 08	DA19-R
34-13-01 08	DA20-R

PART NUMBER CH-SECT-UNIT-FIG-ITEM	IDENT
MTC100YC1-004	
49-60-10 05	DHE-P
49-60-30 08	CG2-R
49-60-30 08	DA4-R
52-70-10 02	DA31-R
73-20-01 05	CG1-R
73-20-01 05	DGE-P
73-20-10 03	CG1-R
73-20-10 03	DA4-R
73-20-10 03	DA5-R
77-10-10 02	DGE-P
77-10-10 02	DGF-P
79-30-10 02	DA31-R
79-30-10 02	DA33-R
79-30-10 02	DGE-P
79-30-10 02	DGF-P
80-10-10 04	CG1-R
80-10-10 04	CG2-R
80-10-10 04	CG6-R
80-10-10 04	CG7-R
80-10-10 04	DGE-P
80-10-10 04	DGF-P
MTC100YC1-005	
21-20-10 03	DA47-P
21-30-10 04	DA2-P
21-30-10 04	DA29-P
21-60-10 11	CG4-P
21-60-10 11	CG5-P
21-60-10 11	DA2-P
21-60-10 11	DH-C-R
21-60-20 03	CG3-P
22-10-40 53	J280A
24-21-17 04	CG3-P
24-21-17 04	CG5-P
24-21-17 04	DA14-P
24-21-17 04	DA15-P
24-21-17 04	DA3-P
24-30-10 02	DA1-P
24-30-10 02	DA14-P
24-30-10 02	DA3-P
24-30-20 02	CG5-P
24-30-20 02	DA18-P
24-30-20 02	DA2-P
24-30-20 03	CG5-P
24-30-20 03	DA18-P
24-30-20 03	DA2-P
24-50-01 06	DA1-P
24-50-01 06	DA14-P
24-50-01 06	DA15-P
24-50-01 06	DA29-P
24-50-01 06	DA3-P

PART NUMBER CH-SECT-UNIT-FIG-ITEM	IDENT
MTC100YC1-005	
24-50-01 07	DA1-P
24-50-01 07	DA14-P
24-50-01 07	DA15-P
24-50-01 07	DA29-P
24-50-01 07	DA3-P
26-10-10 03	DA28-P
26-10-10 03	DA29-P
26-10-10 03	DA46-P
26-10-10 03	F-CG-R
26-10-20 02	DA16-P
26-10-30 03	CG4-P
26-10-30 03	DA15-P
26-10-30 03	DA17-P
26-10-30 03	DA18-P
26-20-10 03	CG5-P
26-20-10 03	E-CG-R
26-20-10 03	F-CG-R
27-00-10 04	DA16-P
27-24-10 03	CG3-P
27-24-10 03	DA16-P
27-24-10 03	DA47-P
27-33-00 07	DA1-P
27-33-00 07	DA16-P
27-33-00 07	DA2-P
27-33-00 07	DA42-P
27-33-00 07	DA43-P
27-33-00 07	DA46-P
27-33-00 07	DA47-P
27-33-00 07	DA7-P
27-61-10 04	DA3-P
27-61-10 08	DA3-P
28-21-05 04	CG4-P
28-21-05 04	CG5-P
28-21-05 04	DA1-P
28-21-05 04	DA2-P
28-40-20 02	DA14-P
28-40-20 02	DA15-P
28-40-40 02	DA14-P
28-40-40 02	DA15-P
28-41-10 02	DA16-P
28-41-10 02	DA43-P
28-41-20 03	DA16-P
28-41-20 03	DA43-P
28-41-20 03	DA7-P
28-42-10 02	DA16-P
29-31-10 02	DA16-P
29-32-10 05	DA14-R
29-32-10 05	DA28-P
29-32-10 05	DA29-P
30-10-10 11	DA42-P

PART NUMBER CH-SECT-UNIT-FIG-ITEM	IDENT
MTC100YC1-005	
30-10-10 11	DA46-P
30-10-10 11	DA47-P
30-20-10 02	DA14-P
30-20-10 02	DA15-P
30-20-10 02	DA28-P
30-20-10 02	DA29-P
30-30-20 02	DA1-P
30-30-20 02	DA2-P
30-30-20 02	DA3-P
30-30-20 02	DA42-P
30-30-20 02	DA8-P
30-30-20 02	DA9-P
30-40-15 11	DA16-P
30-40-15 12	DA16-P
30-40-20 05	DA8-P
30-40-20 05	DA9-P
30-80-10 03	DA1-P
30-80-10 03	DA8-P
31-20-35 03	DA28-P
31-20-60 02	DA14-P
31-50-01 09	DA14-P
31-50-01 09	DA15-P
31-50-01 09	DA16-P
31-50-01 09	DA17-P
31-50-01 09	DA18-P
31-50-01 09	DA24-P
31-50-01 09	DA25-P
31-50-01 09	DA26-P
31-50-01 09	DA27-P
31-50-01 09	DA30-P
31-50-01 14	DA14-P
31-50-01 14	DA15-P
31-50-01 14	DA16-P
31-50-01 14	DA17-P
31-50-01 14	DA18-P
31-50-01 14	DA24-P
31-50-01 14	DA25-P
31-50-01 14	DA26-P
31-50-01 14	DA27-P
31-50-01 14	DA30-P
32-60-10 04	DA29-P
32-60-10 04	DA3-P
32-60-10 04	DA7-P
32-60-30 03	DA28-P
32-60-30 03	DA46-P
32-60-30 03	DA47-P
33-10-05 09	DA1-P
33-10-05 09	DA2-P
33-10-05 09	DA46-P
33-10-05 09	DA47-P

PART NUMBER CH-SECT-UNIT-FIG-ITEM	IDENT
MTC100YC1-005	
33-10-05 09	DA9-P
33-10-05 11	DA1-P
33-10-05 11	DA2-P
33-10-05 11	DA46-P
33-10-05 11	DA47-P
33-10-05 11	DA9-P
33-10-20 08	DA46-P
33-10-20 08	DA47-P
33-10-20 08	DA8-P
33-10-20 08	DA9-P
33-30-05 08	DA28-P
33-30-05 08	DA32-P
33-40-10 05	CGF-R
33-40-10 06	CGF-R
33-40-20 04	E-CG-R
33-40-20 04	F-CG-R
33-40-30 03	CGE-R
34-13-01 04	DA2-P
34-13-01 04	DA7-P
34-13-01 08	DA2-P
34-13-01 08	DA7-P
34-30-10 53	J115A
34-30-20 53	J116A
49-60-30 08	DA16-P
52-70-10 02	DA16-P
73-20-01 05	DA14-P
73-20-01 05	DHC-P
73-20-02 05	CG4-P
73-20-02 05	CG5-P
73-20-02 05	DA18-P
73-20-02 05	DHC-R
73-20-10 03	CG5-P
73-20-10 03	DA1-P
73-20-10 03	DA2-P
73-20-10 03	DA3-P
73-20-10 03	DA46-P
78-30-05 01	DA51-P
79-30-10 02	DA14-P
79-30-10 02	DA15-P
80-10-10 04	DA24-P
MTC100YC1-006	
21-20-10 03	DA47-R
21-30-10 04	DA2-R
21-30-10 04	DA29-R
21-60-10 11	CG4-R
21-60-10 11	CG5-R
21-60-10 11	DA2-R
21-60-10 11	DH-C-P
21-60-20 03	CG3-R
22-10-40 53	P280A

PART NUMBER CH-SECT-UNIT-FIG-ITEM	IDENT
MTC100YC1-006	
24-21-17 04	CG3-R
24-21-17 04	CG5-R
24-21-17 04	DA14-R
24-21-17 04	DA15-R
24-21-17 04	DA3-R
24-30-10 02	DA1-R
24-30-10 02	DA14-R
24-30-10 02	DA3-R
24-30-20 02	CG5-R
24-30-20 02	DA18-R
24-30-20 02	DA2-R
24-30-20 03	CG5-R
24-30-20 03	DA18-R
24-30-20 03	DA2-R
24-50-01 06	DA1-R
24-50-01 06	DA14-R
24-50-01 06	DA15-R
24-50-01 06	DA29-R
24-50-01 06	DA3-R
24-50-01 07	DA1-R
24-50-01 07	DA14-R
24-50-01 07	DA15-R
24-50-01 07	DA29-R
24-50-01 07	DA3-R
26-10-10 03	DA28-R
26-10-10 03	DA29-R
26-10-10 03	DA46-R
26-10-10 03	F-CG-P
26-10-20 02	DA16-R
26-10-30 03	CG4-R
26-10-30 03	DA15-R
26-10-30 03	DA17-R
26-10-30 03	DA18-R
26-20-10 03	CG5-R
26-20-10 03	E-CG-P
26-20-10 03	F-CG-P
27-00-10 04	DA16-R
27-24-10 03	CG3-R
27-24-10 03	DA16-R
27-24-10 03	DA47-R
27-33-00 07	DA1-R
27-33-00 07	DA16-R
27-33-00 07	DA2-R
27-33-00 07	DA42-R
27-33-00 07	DA43-R
27-33-00 07	DA46-R
27-33-00 07	DA47-R
27-33-00 07	DA7-R
27-61-10 04	DA3-R
27-61-10 08	DA3-R

PART NUMBER CH-SECT-UNIT-FIG-ITEM	IDENT
MTC100YC1-006	
28-21-05 04	CG4-R
28-21-05 04	CG5-R
28-21-05 04	DA1-R
28-21-05 04	DA2-R
28-40-20 02	DA14-R
28-40-20 02	DA15-R
28-40-40 02	DA14-R
28-40-40 02	DA15-R
28-41-10 02	DA16-R
28-41-10 02	DA43-R
28-41-20 03	DA16-R
28-41-20 03	DA43-R
28-41-20 03	DA7-R
28-42-10 02	DA16-R
29-31-10 02	DA16-R
29-32-10 05	DA14-P
29-32-10 05	DA28-R
29-32-10 05	DA29-R
30-10-10 11	DA42-R
30-10-10 11	DA46-R
30-10-10 11	DA47-R
30-20-10 02	DA14-R
30-20-10 02	DA15-R
30-20-10 02	DA28-R
30-20-10 02	DA29-R
30-30-20 02	DA1-R
30-30-20 02	DA2-R
30-30-20 02	DA3-R
30-30-20 02	DA42-R
30-30-20 02	DA8-R
30-30-20 02	DA9-R
30-40-15 11	DA16-R
30-40-15 12	DA16-R
30-40-20 05	DA8-R
30-40-20 05	DA9-R
30-80-10 03	DA1-R
30-80-10 03	DA8-R
31-20-35 03	DA28-R
31-20-60 02	DA14-R
31-50-01 09	DA14-R
31-50-01 09	DA15-R
31-50-01 09	DA16-R
31-50-01 09	DA17-R
31-50-01 09	DA18-R
31-50-01 09	DA24-R
31-50-01 09	DA25-R
31-50-01 09	DA26-R
31-50-01 09	DA27-R
31-50-01 09	DA30-R
31-50-01 14	DA14-R

PART NUMBER CH-SECT-UNIT-FIG-ITEM	IDENT
MTC100YC1-006	
31-50-01 14	DA15-R
31-50-01 14	DA16-R
31-50-01 14	DA17-R
31-50-01 14	DA18-R
31-50-01 14	DA24-R
31-50-01 14	DA25-R
31-50-01 14	DA26-R
31-50-01 14	DA27-R
31-50-01 14	DA30-R
32-60-10 04	DA29-R
32-60-10 04	DA3-R
32-60-10 04	DA7-R
32-60-30 03	DA28-R
32-60-30 03	DA46-R
32-60-30 03	DA47-R
33-10-05 09	DA1-R
33-10-05 09	DA2-R
33-10-05 09	DA46-R
33-10-05 09	DA47-R
33-10-05 09	DA9-R
33-10-05 11	DA1-R
33-10-05 11	DA2-R
33-10-05 11	DA46-R
33-10-05 11	DA47-R
33-10-05 11	DA9-R
33-10-20 08	DA46-R
33-10-20 08	DA47-R
33-10-20 08	DA8-R
33-10-20 08	DA9-R
33-30-05 08	DA28-R
33-30-05 08	DA32-R
33-40-10 05	CGF-P
33-40-10 06	CGF-P
33-40-20 04	E-CG-P
33-40-20 04	F-CG-P
33-40-30 03	CGE-P
34-13-01 04	DA2-R
34-13-01 04	DA7-R
34-13-01 08	DA2-R
34-13-01 08	DA7-R
49-60-30 08	DA16-R
52-70-10 02	DA16-R
73-20-01 05	DA14-R
73-20-01 05	DHC-R
73-20-02 05	CG4-R
73-20-02 05	CG5-R
73-20-02 05	DA18-R
73-20-02 05	DHC-P
73-20-10 03	CG5-R
73-20-10 03	DA1-R

PART NUMBER CH-SECT-UNIT-FIG-ITEM	IDENT
MTC100YC1-006	
73-20-10 03	DA2-R
73-20-10 03	DA3-R
73-20-10 03	DA46-R
78-30-05 01	DA51-R
79-30-10 02	DA14-R
79-30-10 02	DA15-R
80-10-10 04	DA24-R
MTC100YH1-003	
21-20-10 03	DA47-P
21-20-10 03	DA47-P
21-30-10 02	CG3-P
21-30-10 02	DA29-P
21-30-10 04	DA2-P
21-30-10 04	DA2-P
21-30-10 04	DA29-P
21-30-10 04	DA29-P
21-60-10 08	CG4-P
21-60-10 08	CG5-P
21-60-10 08	DA2-P
21-60-10 08	DH-C-P
21-60-10 10	CG4-P
21-60-10 10	CG5-P
21-60-10 10	DA2-P
21-60-10 10	DH-C-P
21-60-10 11	CG4-P
21-60-10 11	CG4-P
21-60-10 11	CG5-P
21-60-10 11	CG5-P
21-60-10 11	DA2-P
21-60-10 11	DA2-P
21-60-10 11	DH-C-P
21-60-10 11	DH-C-P
21-60-20 02	CG3-P
21-60-20 03	CG3-P
21-60-20 03	CG3-P
22-10-40 53	P280A
22-10-40 53	P280A
24-21-17 03	CG3-P
24-21-17 03	CG5-P
24-21-17 03	DA14-P
24-21-17 03	DA15-P
24-21-17 03	DA3-P
24-21-17 04	CG3-P
24-21-17 04	CG3-P
24-21-17 04	CG5-P
24-21-17 04	CG5-P
24-21-17 04	DA14-P
24-21-17 04	DA14-P
24-21-17 04	DA15-P
24-21-17 04	DA15-P

PART NUMBER CH-SECT-UNIT-FIG-ITEM	IDENT
MTC100YH1-003	
24-21-17 04	DA3-P
24-21-17 04	DA3-P
24-30-10 02	DA1-P
24-30-10 02	DA1-P
24-30-10 02	DA14-P
24-30-10 02	DA14-P
24-30-10 02	DA3-P
24-30-10 02	DA3-P
24-30-20 02	CG5-P
24-30-20 02	CG5-P
24-30-20 02	DA18-P
24-30-20 02	DA18-P
24-30-20 02	DA2-P
24-30-20 02	DA2-P
24-30-20 03	CG5-P
24-30-20 03	CG5-P
24-30-20 03	DA18-P
24-30-20 03	DA18-P
24-30-20 03	DA2-P
24-30-20 03	DA2-P
24-50-01 05	DA1-P
24-50-01 05	DA14-P
24-50-01 05	DA15-P
24-50-01 05	DA29-P
24-50-01 05	DA3-P
24-50-01 06	DA1-P
24-50-01 06	DA1-P
24-50-01 06	DA14-P
24-50-01 06	DA14-P
24-50-01 06	DA15-P
24-50-01 06	DA15-P
24-50-01 06	DA29-P
24-50-01 06	DA29-P
24-50-01 06	DA3-P
24-50-01 06	DA3-P
24-50-01 07	DA1-P
24-50-01 07	DA1-P
24-50-01 07	DA14-P
24-50-01 07	DA14-P
24-50-01 07	DA15-P
24-50-01 07	DA15-P
24-50-01 07	DA29-P
24-50-01 07	DA29-P
24-50-01 07	DA3-P
24-50-01 07	DA3-P
26-10-10 03	DA28-P
26-10-10 03	DA28-P
26-10-10 03	DA29-P
26-10-10 03	DA29-P
26-10-10 03	DA46-P

PART NUMBER CH-SECT-UNIT-FIG-ITEM	IDENT
MTC100YH1-003	
26-10-10 03	DA46-P
26-10-10 03	F-CG-P
26-10-10 03	F-CG-P
26-10-20 02	DA16-P
26-10-20 02	DA16-P
26-10-30 03	CG4-P
26-10-30 03	CG4-P
26-10-30 03	DA15-P
26-10-30 03	DA15-P
26-10-30 03	DA17-P
26-10-30 03	DA17-P
26-10-30 03	DA18-P
26-10-30 03	DA18-P
26-20-10 03	CG5-P
26-20-10 03	CG5-P
26-20-10 03	E-CG-P
26-20-10 03	E-CG-P
26-20-10 03	F-CG-P
26-20-10 03	F-CG-P
27-00-10 03	DA16-P
27-00-10 04	DA16-P
27-00-10 04	DA16-P
27-24-10 02	CG3-P
27-24-10 02	DA16-P
27-24-10 02	DA47-P
27-24-10 03	CG3-P
27-24-10 03	CG3-P
27-24-10 03	DA16-P
27-24-10 03	DA16-P
27-24-10 03	DA47-P
27-24-10 03	DA47-P
27-33-00 05	DA1-P
27-33-00 05	DA16-P
27-33-00 05	DA2-P
27-33-00 05	DA42-P
27-33-00 05	DA43-P
27-33-00 05	DA46-P
27-33-00 05	DA47-P
27-33-00 05	DA7-P
27-33-00 07	DA1-P
27-33-00 07	DA1-P
27-33-00 07	DA16-P
27-33-00 07	DA16-P
27-33-00 07	DA2-P
27-33-00 07	DA2-P
27-33-00 07	DA42-P
27-33-00 07	DA42-P
27-33-00 07	DA43-P
27-33-00 07	DA43-P
27-33-00 07	DA46-P

PART NUMBER CH-SECT-UNIT-FIG-ITEM	IDENT
MTC100YH1-003	
27-33-00 07	DA46-P
27-33-00 07	DA47-P
27-33-00 07	DA47-P
27-33-00 07	DA7-P
27-33-00 07	DA7-P
27-61-10 03	DA3-P
27-61-10 04	DA3-P
27-61-10 04	DA3-P
27-61-10 08	DA3-P
27-61-20 04	CG4-P
27-61-20 04	DA7-P
28-21-05 02	CG4-P
28-21-05 02	CG5-P
28-21-05 02	DA1-P
28-21-05 02	DA2-P
28-21-05 03	CG4-P
28-21-05 03	CG5-P
28-21-05 03	DA1-P
28-21-05 03	DA19-P
28-21-05 03	DA2-P
28-21-05 03	GG5-P
28-21-05 04	CG4-P
28-21-05 04	CG4-P
28-21-05 04	CG5-P
28-21-05 04	CG5-P
28-21-05 04	DA1-P
28-21-05 04	DA1-P
28-21-05 04	DA2-P
28-21-05 04	DA2-P
28-40-20 02	DA14-P
28-40-20 02	DA14-P
28-40-20 02	DA15-P
28-40-20 02	DA15-P
28-40-40 02	DA14-P
28-40-40 02	DA14-P
28-40-40 02	DA15-P
28-40-40 02	DA15-P
28-41-10 02	DA16-P
28-41-10 02	DA16-P
28-41-10 02	DA43-P
28-41-10 02	DA43-P
28-41-10 03	DA16-P
28-41-10 03	DA43-P
28-41-20 03	DA16-P
28-41-20 03	DA16-P
28-41-20 03	DA43-P
28-41-20 03	DA43-P
28-41-20 03	DA7-P
28-41-20 03	DA7-P
28-42-10 02	DA16-P

PART NUMBER CH-SECT-UNIT-FIG-ITEM	IDENT
MTC100YH1-003	
28-42-10 02	DA16-P
29-31-10 02	DA16-P
29-31-10 02	DA16-P
29-32-10 05	DA14-P
29-32-10 05	DA14-P
29-32-10 05	DA28-P
29-32-10 05	DA28-P
29-32-10 05	DA29-P
29-32-10 05	DA29-P
30-10-10 11	DA42-P
30-10-10 11	DA42-P
30-10-10 11	DA46-P
30-10-10 11	DA46-P
30-10-10 11	DA47-P
30-10-10 11	DA47-P
30-20-10 02	DA14-P
30-20-10 02	DA14-P
30-20-10 02	DA15-P
30-20-10 02	DA15-P
30-20-10 02	DA28-P
30-20-10 02	DA28-P
30-20-10 02	DA29-P
30-20-10 02	DA29-P
30-30-20 02	DA1-P
30-30-20 02	DA1-P
30-30-20 02	DA2-P
30-30-20 02	DA2-P
30-30-20 02	DA3-P
30-30-20 02	DA3-P
30-30-20 02	DA42-P
30-30-20 02	DA42-P
30-30-20 02	DA8-P
30-30-20 02	DA8-P
30-30-20 02	DA9-P
30-30-20 02	DA9-P
30-40-15 07	DA16-P
30-40-15 10	DA16-P
30-40-15 11	DA16-P
30-40-15 11	DA16-P
30-40-15 12	DA16-P
30-40-15 12	DA16-P
30-40-20 03	DA8-P
30-40-20 03	DA9-P
30-40-20 05	DA8-P
30-40-20 05	DA8-P
30-40-20 05	DA9-P
30-40-20 05	DA9-P
30-80-10 02	DA1-P
30-80-10 02	DA8-P
30-80-10 03	DA1-P

PART NUMBER CH-SECT-UNIT-FIG-ITEM	IDENT
MTC100YH1-003	
30-80-10 03	DA1-P
30-80-10 03	DA8-P
30-80-10 03	DA8-P
31-20-35 02	DA28-P
31-20-35 03	DA28-P
31-20-35 03	DA28-P
31-20-60 02	DA14-P
31-20-60 02	DA14-P
31-50-01 04	DA14-P
31-50-01 04	DA15-P
31-50-01 04	DA16-P
31-50-01 04	DA17-P
31-50-01 04	DA18-P
31-50-01 04	DA24-P
31-50-01 04	DA25-P
31-50-01 04	DA26-P
31-50-01 04	DA27-P
31-50-01 04	DA30-P
31-50-01 07	DA14-P
31-50-01 07	DA15-P
31-50-01 07	DA16-P
31-50-01 07	DA17-P
31-50-01 07	DA18-P
31-50-01 07	DA24-P
31-50-01 07	DA25-P
31-50-01 07	DA26-P
31-50-01 07	DA27-P
31-50-01 07	DA30-P
31-50-01 08	DA14-P
31-50-01 08	DA15-P
31-50-01 08	DA16-P
31-50-01 08	DA17-P
31-50-01 08	DA18-P
31-50-01 08	DA24-P
31-50-01 08	DA25-P
31-50-01 08	DA26-P
31-50-01 08	DA27-P
31-50-01 08	DA30-P
31-50-01 08	DA50-P
31-50-01 09	DA14-P
31-50-01 09	DA14-P
31-50-01 09	DA15-P
31-50-01 09	DA15-P
31-50-01 09	DA16-P
31-50-01 09	DA16-P
31-50-01 09	DA17-P
31-50-01 09	DA17-P
31-50-01 09	DA18-P
31-50-01 09	DA18-P
31-50-01 09	DA24-P

PART NUMBER CH-SECT-UNIT-FIG-ITEM	IDENT
MTC100YH1-003	
31-50-01 09	DA24-P
31-50-01 09	DA25-P
31-50-01 09	DA25-P
31-50-01 09	DA26-P
31-50-01 09	DA26-P
31-50-01 09	DA27-P
31-50-01 09	DA27-P
31-50-01 09	DA30-P
31-50-01 09	DA30-P
31-50-01 14	DA14-P
31-50-01 14	DA14-P
31-50-01 14	DA15-P
31-50-01 14	DA15-P
31-50-01 14	DA16-P
31-50-01 14	DA16-P
31-50-01 14	DA17-P
31-50-01 14	DA17-P
31-50-01 14	DA18-P
31-50-01 14	DA18-P
31-50-01 14	DA24-P
31-50-01 14	DA24-P
31-50-01 14	DA25-P
31-50-01 14	DA25-P
31-50-01 14	DA26-P
31-50-01 14	DA26-P
31-50-01 14	DA27-P
31-50-01 14	DA27-P
31-50-01 14	DA30-P
31-50-01 14	DA30-P
31-50-05 03	DA17-P
31-50-05 03	DA50-P
32-60-10 04	DA29-P
32-60-10 04	DA29-P
32-60-10 04	DA3-P
32-60-10 04	DA3-P
32-60-10 04	DA7-P
32-60-10 04	DA7-P
32-60-30 02	DA28-P
32-60-30 02	DA46-P
32-60-30 02	DA47-P
32-60-30 03	DA28-P
32-60-30 03	DA28-P
32-60-30 03	DA46-P
32-60-30 03	DA46-P
32-60-30 03	DA47-P
32-60-30 03	DA47-P
33-10-05 05	DA1-P
33-10-05 05	DA2-P
33-10-05 05	DA46-P
33-10-05 05	DA47-P

PART NUMBER CH-SECT-UNIT-FIG-ITEM	IDENT
MTC100YH1-003	
33-10-05 05	DA9-P
33-10-05 07	DA1-P
33-10-05 07	DA2-P
33-10-05 07	DA46-P
33-10-05 07	DA47-P
33-10-05 07	DA9-P
33-10-05 08	DA1-P
33-10-05 08	DA2-P
33-10-05 08	DA46-P
33-10-05 08	DA47-P
33-10-05 08	DA9-P
33-10-05 09	DA1-P
33-10-05 09	DA1-P
33-10-05 09	DA2-P
33-10-05 09	DA2-P
33-10-05 09	DA46-P
33-10-05 09	DA46-P
33-10-05 09	DA47-P
33-10-05 09	DA47-P
33-10-05 09	DA9-P
33-10-05 09	DA9-P
33-10-05 11	DA1-P
33-10-05 11	DA1-P
33-10-05 11	DA2-P
33-10-05 11	DA2-P
33-10-05 11	DA46-P
33-10-05 11	DA46-P
33-10-05 11	DA47-P
33-10-05 11	DA47-P
33-10-05 11	DA9-P
33-10-05 11	DA9-P
33-10-10 31	DA50-P
33-10-20 04	DA46-P
33-10-20 04	DA47-P
33-10-20 04	DA8-P
33-10-20 04	DA9-P
33-10-20 07	DA46-P
33-10-20 07	DA47-P
33-10-20 07	DA8-P
33-10-20 07	DA9-P
33-10-20 08	DA46-P
33-10-20 08	DA46-P
33-10-20 08	DA47-P
33-10-20 08	DA47-P
33-10-20 08	DA8-P
33-10-20 08	DA8-P
33-10-20 08	DA9-P
33-10-20 08	DA9-P
33-30-05 07	DA28-P
33-30-05 07	DA32-P

PART NUMBER CH-SECT-UNIT-FIG-ITEM	IDENT
MTC100YH1-003	
33-30-05 08	DA28-P
33-30-05 08	DA28-P
33-30-05 08	DA32-P
33-30-05 08	DA32-P
33-30-15 07	CGE-P
33-40-10 05	CGF-P
33-40-10 05	CGF-P
33-40-10 06	CGF-P
33-40-20 04	E-CG-P
33-40-20 04	E-CG-P
33-40-20 04	F-CG-P
33-40-20 04	F-CG-P
33-40-30 03	CGE-P
33-40-30 03	CGE-P
34-13-01 04	DA2-P
34-13-01 04	DA2-P
34-13-01 04	DA7-P
34-13-01 04	DA7-P
34-13-01 08	DA2-P
34-13-01 08	DA2-P
34-13-01 08	DA7-P
34-13-01 08	DA7-P
49-60-30 06	DA16-P
49-60-30 08	DA16-P
49-60-30 08	DA16-P
49-60-30 09	DA16-P
49-60-30 11	DA16-P
52-70-10 02	DA16-P
52-70-10 02	DA16-P
73-20-01 05	DA14-P
73-20-01 05	DA14-P
73-20-01 05	DHC-P
73-20-01 05	DHC-P
73-20-02 05	CG4-P
73-20-02 05	CG4-P
73-20-02 05	CG5-P
73-20-02 05	CG5-P
73-20-02 05	DA18-P
73-20-02 05	DA18-P
73-20-02 05	DHC-P
73-20-02 05	DHC-P
73-20-10 03	CG5-P
73-20-10 03	CG5-P
73-20-10 03	DA1-P
73-20-10 03	DA1-P
73-20-10 03	DA2-P
73-20-10 03	DA2-P
73-20-10 03	DA3-P
73-20-10 03	DA3-P
73-20-10 03	DA46-P

PART NUMBER CH-SECT-UNIT-FIG-ITEM	IDENT
MTC100YH1-003	
73-20-10 03	DA46-P
78-30-05 01	DA51-P
78-30-05 01	DA51-P
78-30-05 02	DA51-P
79-30-10 02	DA14-P
79-30-10 02	DA14-P
79-30-10 02	DA15-P
79-30-10 02	DA15-P
80-10-10 04	DA24-P
80-10-10 04	DA24-P
MTC100YH1-004	
21-20-10 03	DA47-R
21-20-10 03	DA47-R
21-30-10 02	CG3-R
21-30-10 02	DA29-R
21-30-10 04	DA2-R
21-30-10 04	DA2-R
21-30-10 04	DA29-R
21-30-10 04	DA29-R
21-60-10 08	CG4-R
21-60-10 08	CG5-R
21-60-10 08	DA2-R
21-60-10 08	DH-C-R
21-60-10 10	CG4-R
21-60-10 10	CG5-R
21-60-10 10	DA2-R
21-60-10 10	DH-C-R
21-60-10 11	CG4-R
21-60-10 11	CG4-R
21-60-10 11	CG5-R
21-60-10 11	CG5-R
21-60-10 11	DA2-R
21-60-10 11	DA2-R
21-60-10 11	DH-C-R
21-60-10 11	DH-C-R
21-60-20 02	CG3-R
21-60-20 03	CG3-R
21-60-20 03	CG3-R
22-10-40 53	J280A
22-10-40 53	J280A
24-21-17 03	CG3-R
24-21-17 03	CG5-R
24-21-17 03	DA14-R
24-21-17 03	DA15-R
24-21-17 03	DA3-R
24-21-17 04	CG3-R
24-21-17 04	CG3-R
24-21-17 04	CG5-R
24-21-17 04	CG5-R
24-21-17 04	DA14-R

PART NUMBER CH-SECT-UNIT-FIG-ITEM	IDENT
MTC100YH1-004	
24-21-17 04	DA14-R
24-21-17 04	DA15-R
24-21-17 04	DA15-R
24-21-17 04	DA3-R
24-21-17 04	DA3-R
24-30-10 02	DA1-R
24-30-10 02	DA1-R
24-30-10 02	DA14-R
24-30-10 02	DA14-R
24-30-10 02	DA3-R
24-30-10 02	DA3-R
24-30-20 02	CG5-R
24-30-20 02	CG5-R
24-30-20 02	DA18-R
24-30-20 02	DA18-R
24-30-20 02	DA2-R
24-30-20 02	DA2-R
24-30-20 03	CG5-R
24-30-20 03	CG5-R
24-30-20 03	DA18-R
24-30-20 03	DA18-R
24-30-20 03	DA2-R
24-30-20 03	DA2-R
24-50-01 05	DA1-R
24-50-01 05	DA14-R
24-50-01 05	DA15-R
24-50-01 05	DA29-R
24-50-01 05	DA3-R
24-50-01 06	DA1-R
24-50-01 06	DA1-R
24-50-01 06	DA14-R
24-50-01 06	DA14-R
24-50-01 06	DA15-R
24-50-01 06	DA15-R
24-50-01 06	DA29-R
24-50-01 06	DA29-R
24-50-01 06	DA3-R
24-50-01 06	DA3-R
24-50-01 07	DA1-R
24-50-01 07	DA1-R
24-50-01 07	DA14-R
24-50-01 07	DA14-R
24-50-01 07	DA15-R
24-50-01 07	DA15-R
24-50-01 07	DA29-R
24-50-01 07	DA29-R
24-50-01 07	DA3-R
24-50-01 07	DA3-R
26-10-10 03	DA28-R
26-10-10 03	DA28-R

PART NUMBER CH-SECT-UNIT-FIG-ITEM	IDENT
MTC100YH1-004	
26-10-10 03	DA29-R
26-10-10 03	DA29-R
26-10-10 03	DA46-R
26-10-10 03	DA46-R
26-10-10 03	F-CG-R
26-10-10 03	F-CG-R
26-10-20 02	DA16-R
26-10-20 02	DA16-R
26-10-30 03	CG4-R
26-10-30 03	CG4-R
26-10-30 03	DA15-R
26-10-30 03	DA15-R
26-10-30 03	DA17-R
26-10-30 03	DA17-R
26-10-30 03	DA18-R
26-10-30 03	DA18-R
26-20-10 03	CG5-R
26-20-10 03	CG5-R
26-20-10 03	E-CG-R
26-20-10 03	E-CG-R
26-20-10 03	F-CG-R
26-20-10 03	F-CG-R
27-00-10 03	DA16-R
27-00-10 04	DA16-R
27-00-10 04	DA16-R
27-24-10 02	CG3-R
27-24-10 02	DA16-R
27-24-10 02	DA47-R
27-24-10 03	CG3-R
27-24-10 03	CG3-R
27-24-10 03	DA16-R
27-24-10 03	DA16-R
27-24-10 03	DA47-R
27-24-10 03	DA47-R
27-33-00 05	DA1-R
27-33-00 05	DA16-R
27-33-00 05	DA2-R
27-33-00 05	DA42-R
27-33-00 05	DA43-R
27-33-00 05	DA46-R
27-33-00 05	DA47-R
27-33-00 05	DA7-R
27-33-00 07	DA1-R
27-33-00 07	DA1-R
27-33-00 07	DA16-R
27-33-00 07	DA16-R
27-33-00 07	DA2-R
27-33-00 07	DA2-R
27-33-00 07	DA42-R
27-33-00 07	DA42-R

PART NUMBER CH-SECT-UNIT-FIG-ITEM	IDENT
MTC100YH1-004	
27-33-00 07	DA43-R
27-33-00 07	DA43-R
27-33-00 07	DA46-R
27-33-00 07	DA46-R
27-33-00 07	DA47-R
27-33-00 07	DA47-R
27-33-00 07	DA7-R
27-33-00 07	DA7-R
27-61-10 03	DA3-R
27-61-10 04	DA3-R
27-61-10 04	DA3-R
27-61-10 08	DA3-R
27-61-20 04	CG4-R
27-61-20 04	DA7-R
28-21-05 02	CG4-R
28-21-05 02	CG5-R
28-21-05 02	DA1-R
28-21-05 02	DA2-R
28-21-05 03	CG4-R
28-21-05 03	CG5-R
28-21-05 03	DA1-R
28-21-05 03	DA19-R
28-21-05 03	DA2-R
28-21-05 04	CG4-R
28-21-05 04	CG4-R
28-21-05 04	CG5-R
28-21-05 04	CG5-R
28-21-05 04	DA1-R
28-21-05 04	DA1-R
28-21-05 04	DA2-R
28-21-05 04	DA2-R
28-40-20 02	DA14-R
28-40-20 02	DA14-R
28-40-20 02	DA15-R
28-40-20 02	DA15-R
28-40-40 02	DA14-R
28-40-40 02	DA14-R
28-40-40 02	DA15-R
28-40-40 02	DA15-R
28-41-10 02	DA16-R
28-41-10 02	DA16-R
28-41-10 02	DA43-R
28-41-10 02	DA43-R
28-41-10 03	DA16-R
28-41-10 03	DA43-R
28-41-20 03	DA16-R
28-41-20 03	DA16-R
28-41-20 03	DA43-R
28-41-20 03	DA43-R
28-41-20 03	DA7-R

PART NUMBER CH-SECT-UNIT-FIG-ITEM	IDENT
MTC100YH1-004	
28-41-20 03	DA7-R
28-42-10 02	DA16-R
28-42-10 02	DA16-R
29-31-10 02	DA16-R
29-31-10 02	DA16-R
29-32-10 05	DA14-R
29-32-10 05	DA14-R
29-32-10 05	DA28-R
29-32-10 05	DA28-R
29-32-10 05	DA29-R
29-32-10 05	DA29-R
30-10-10 11	DA42-R
30-10-10 11	DA42-R
30-10-10 11	DA46-R
30-10-10 11	DA46-R
30-10-10 11	DA47-R
30-10-10 11	DA47-R
30-20-10 02	DA14-R
30-20-10 02	DA14-R
30-20-10 02	DA15-R
30-20-10 02	DA15-R
30-20-10 02	DA28-R
30-20-10 02	DA28-R
30-20-10 02	DA29-R
30-20-10 02	DA29-R
30-30-20 02	DA1-R
30-30-20 02	DA1-R
30-30-20 02	DA2-R
30-30-20 02	DA2-R
30-30-20 02	DA3-R
30-30-20 02	DA3-R
30-30-20 02	DA42-R
30-30-20 02	DA42-R
30-30-20 02	DA8-R
30-30-20 02	DA8-R
30-30-20 02	DA9-R
30-30-20 02	DA9-R
30-40-15 07	DA16-R
30-40-15 10	DA16-R
30-40-15 11	DA16-R
30-40-15 11	DA16-R
30-40-15 12	DA16-R
30-40-15 12	DA16-R
30-40-20 03	DA8-R
30-40-20 03	DA9-R
30-40-20 05	DA8-R
30-40-20 05	DA8-R
30-40-20 05	DA9-R
30-40-20 05	DA9-R
30-80-10 02	DA1-R

PART NUMBER CH-SECT-UNIT-FIG-ITEM	IDENT
MTC100YH1-004	
30-80-10 02	DA8-R
30-80-10 03	DA1-R
30-80-10 03	DA1-R
30-80-10 03	DA8-R
30-80-10 03	DA8-R
31-20-35 02	DA28-R
31-20-35 03	DA28-R
31-20-35 03	DA28-R
31-20-60 02	DA14-R
31-20-60 02	DA14-R
31-50-01 04	DA14-R
31-50-01 04	DA15-R
31-50-01 04	DA16-R
31-50-01 04	DA17-R
31-50-01 04	DA18-R
31-50-01 04	DA24-R
31-50-01 04	DA25-R
31-50-01 04	DA26-R
31-50-01 04	DA27-R
31-50-01 04	DA30-R
31-50-01 07	DA14-R
31-50-01 07	DA15-R
31-50-01 07	DA16-R
31-50-01 07	DA17-R
31-50-01 07	DA18-R
31-50-01 07	DA24-R
31-50-01 07	DA25-R
31-50-01 07	DA26-R
31-50-01 07	DA27-R
31-50-01 07	DA30-R
31-50-01 08	DA14-R
31-50-01 08	DA15-R
31-50-01 08	DA16-R
31-50-01 08	DA17-R
31-50-01 08	DA18-R
31-50-01 08	DA24-R
31-50-01 08	DA25-R
31-50-01 08	DA26-R
31-50-01 08	DA27-R
31-50-01 08	DA30-R
31-50-01 08	DA50-R
31-50-01 09	DA14-R
31-50-01 09	DA14-R
31-50-01 09	DA15-R
31-50-01 09	DA15-R
31-50-01 09	DA16-R
31-50-01 09	DA16-R
31-50-01 09	DA17-R
31-50-01 09	DA17-R
31-50-01 09	DA18-R

PART NUMBER CH-SECT-UNIT-FIG-ITEM	IDENT
MTC100YH1-004	
31-50-01 09	DA18-R
31-50-01 09	DA24-R
31-50-01 09	DA24-R
31-50-01 09	DA25-R
31-50-01 09	DA25-R
31-50-01 09	DA26-R
31-50-01 09	DA26-R
31-50-01 09	DA27-R
31-50-01 09	DA27-R
31-50-01 09	DA30-R
31-50-01 09	DA30-R
31-50-01 14	DA14-R
31-50-01 14	DA14-R
31-50-01 14	DA15-R
31-50-01 14	DA15-R
31-50-01 14	DA16-R
31-50-01 14	DA16-R
31-50-01 14	DA17-R
31-50-01 14	DA17-R
31-50-01 14	DA18-R
31-50-01 14	DA18-R
31-50-01 14	DA24-R
31-50-01 14	DA24-R
31-50-01 14	DA25-R
31-50-01 14	DA25-R
31-50-01 14	DA26-R
31-50-01 14	DA26-R
31-50-01 14	DA27-R
31-50-01 14	DA27-R
31-50-01 14	DA30-R
31-50-01 14	DA30-R
31-50-05 03	DA17-R
31-50-05 03	DA50-R
32-60-10 04	DA29-R
32-60-10 04	DA29-R
32-60-10 04	DA3-R
32-60-10 04	DA3-R
32-60-10 04	DA7-R
32-60-10 04	DA7-R
32-60-30 02	DA28-R
32-60-30 02	DA46-R
32-60-30 02	DA47-R
32-60-30 03	DA28-R
32-60-30 03	DA28-R
32-60-30 03	DA46-R
32-60-30 03	DA46-R
32-60-30 03	DA47-R
32-60-30 03	DA47-R
33-10-05 05	DA1-R
33-10-05 05	DA2-R

PART NUMBER CH-SECT-UNIT-FIG-ITEM	IDENT
MTC100YH1-004	
33-10-05 05	DA46-R
33-10-05 05	DA47-R
33-10-05 05	DA9-R
33-10-05 07	DA1-R
33-10-05 07	DA2-R
33-10-05 07	DA46-R
33-10-05 07	DA47-R
33-10-05 07	DA9-R
33-10-05 08	DA1-R
33-10-05 08	DA2-R
33-10-05 08	DA46-R
33-10-05 08	DA47-R
33-10-05 08	DA9-R
33-10-05 09	DA1-R
33-10-05 09	DA1-R
33-10-05 09	DA2-R
33-10-05 09	DA2-R
33-10-05 09	DA46-R
33-10-05 09	DA46-R
33-10-05 09	DA47-R
33-10-05 09	DA47-R
33-10-05 09	DA9-R
33-10-05 09	DA9-R
33-10-05 11	DA1-R
33-10-05 11	DA1-R
33-10-05 11	DA2-R
33-10-05 11	DA2-R
33-10-05 11	DA46-R
33-10-05 11	DA46-R
33-10-05 11	DA47-R
33-10-05 11	DA47-R
33-10-05 11	DA9-R
33-10-05 11	DA9-R
33-10-10 31	DA50-R
33-10-20 04	DA46-R
33-10-20 04	DA47-R
33-10-20 04	DA8-R
33-10-20 04	DA9-R
33-10-20 07	DA46-R
33-10-20 07	DA47-R
33-10-20 07	DA8-R
33-10-20 07	DA9-R
33-10-20 08	DA46-R
33-10-20 08	DA46-R
33-10-20 08	DA47-R
33-10-20 08	DA47-R
33-10-20 08	DA8-R
33-10-20 08	DA8-R
33-10-20 08	DA9-R
33-10-20 08	DA9-R

PART NUMBER CH-SECT-UNIT-FIG-ITEM	IDENT
MTC100YH1-004	
33-30-05 07	DA28-R
33-30-05 07	DA32-R
33-30-05 08	DA28-R
33-30-05 08	DA28-R
33-30-05 08	DA32-R
33-30-05 08	DA32-R
33-30-15 07	CGE-R
33-40-10 05	CGF-R
33-40-10 05	CGF-R
33-40-10 06	CGF-R
33-40-20 04	E-CG-R
33-40-20 04	E-CG-R
33-40-20 04	F-CG-R
33-40-20 04	F-CG-R
33-40-30 03	CGE-R
33-40-30 03	CGE-R
34-13-01 04	DA2-R
34-13-01 04	DA2-R
34-13-01 04	DA7-R
34-13-01 04	DA7-R
34-13-01 08	DA2-R
34-13-01 08	DA2-R
34-13-01 08	DA7-R
34-13-01 08	DA7-R
34-30-10 53	J115A
34-30-10 53	J115A
34-30-20 53	J116A
34-30-20 53	J116A
49-60-30 06	DA16-R
49-60-30 08	DA16-R
49-60-30 08	DA16-R
49-60-30 09	DA16-R
49-60-30 11	DA16-R
52-70-10 02	DA16-R
52-70-10 02	DA16-R
73-20-01 05	DA14-R
73-20-01 05	DA14-R
73-20-01 05	DHC-R
73-20-01 05	DHC-R
73-20-02 05	CG4-R
73-20-02 05	CG4-R
73-20-02 05	CG5-R
73-20-02 05	CG5-R
73-20-02 05	DA18-R
73-20-02 05	DA18-R
73-20-02 05	DHC-R
73-20-02 05	DHC-R
73-20-10 03	CG5-R
73-20-10 03	CG5-R
73-20-10 03	DA1-R

PART NUMBER CH-SECT-UNIT-FIG-ITEM	IDENT
MTC100YH1-004	
73-20-10 03	DA1-R
73-20-10 03	DA2-R
73-20-10 03	DA2-R
73-20-10 03	DA3-R
73-20-10 03	DA3-R
73-20-10 03	DA46-R
73-20-10 03	DA46-R
78-30-05 01	DA51-R
78-30-05 01	DA51-R
78-30-05 02	DA51-R
79-30-10 02	DA14-R
79-30-10 02	DA14-R
79-30-10 02	DA15-R
79-30-10 02	DA15-R
80-10-10 04	DA24-R
80-10-10 04	DA24-R
MTC100YH2-009	
21-20-10 03	CG7-P
21-20-10 03	CG7-P
21-20-10 03	DA20-P
21-20-10 03	DA20-P
21-30-10 02	DA21-P
21-30-10 04	DA21-P
21-30-10 04	DA21-P
21-31-10 07	DA20-P
21-31-10 07	DA20-P
21-31-10 07	DA31-P
21-31-10 07	DA31-P
21-31-10 07	DA32-P
21-31-10 07	DA32-P
21-31-10 07	DA33-P
21-31-10 07	DA33-P
21-31-10 07	DA35-P
21-31-10 07	DA35-P
21-60-10 08	CG1-P
21-60-10 08	CG2-P
21-60-10 08	CG6-P
21-60-10 08	CG7-P
21-60-10 08	DA19-P
21-60-10 08	DA20-P
21-60-10 08	DA21-P
21-60-10 08	DA35-P
21-60-10 08	DA4-P
21-60-10 10	CG1-P
21-60-10 10	CG2-P
21-60-10 10	CG6-P
21-60-10 10	CG7-P
21-60-10 10	DA19-P
21-60-10 10	DA20-P
21-60-10 10	DA21-P

PART NUMBER CH-SECT-UNIT-FIG-ITEM	IDENT
MTC100YH2-009	
21-60-10 10	DA35-P
21-60-10 10	DA4-P
21-60-10 11	CG1-P
21-60-10 11	CG1-P
21-60-10 11	CG2-P
21-60-10 11	CG2-P
21-60-10 11	CG6-P
21-60-10 11	CG6-P
21-60-10 11	CG7-P
21-60-10 11	CG7-P
21-60-10 11	DA19-P
21-60-10 11	DA19-P
21-60-10 11	DA20-P
21-60-10 11	DA20-P
21-60-10 11	DA21-P
21-60-10 11	DA21-P
21-60-10 11	DA35-P
21-60-10 11	DA35-P
21-60-10 11	DA4-P
21-60-10 11	DA4-P
21-60-20 02	CG7-P
21-60-20 02	DA19-P
21-60-20 02	DA20-P
21-60-20 03	CG7-P
21-60-20 03	CG7-P
21-60-20 03	DA19-P
21-60-20 03	DA19-P
21-60-20 03	DA20-P
21-60-20 03	DA20-P
24-21-17 03	DA21-P
24-21-17 04	DA21-P
24-21-17 04	DA21-P
24-30-10 02	CG1-P
24-30-10 02	CG1-P
24-30-20 02	DA4-P
24-30-20 02	DA4-P
24-30-20 03	DA4-P
24-30-20 03	DA4-P
24-50-01 05	CG1-P
24-50-01 05	CG2-P
24-50-01 05	DA19-P
24-50-01 05	DA20-P
24-50-01 05	DA21-P
24-50-01 05	DA4-P
24-50-01 06	CG1-P
24-50-01 06	CG1-P
24-50-01 06	CG2-P
24-50-01 06	CG2-P
24-50-01 06	DA19-P
24-50-01 06	DA19-P

PART NUMBER CH-SECT-UNIT-FIG-ITEM	IDENT
MTC100YH2-009	
24-50-01 06	DA20-P
24-50-01 06	DA20-P
24-50-01 06	DA21-P
24-50-01 06	DA21-P
24-50-01 06	DA4-P
24-50-01 06	DA4-P
24-50-01 07	CG1-P
24-50-01 07	CG1-P
24-50-01 07	CG2-P
24-50-01 07	CG2-P
24-50-01 07	DA19-P
24-50-01 07	DA19-P
24-50-01 07	DA20-P
24-50-01 07	DA20-P
24-50-01 07	DA21-P
24-50-01 07	DA21-P
24-50-01 07	DA4-P
24-50-01 07	DA4-P
26-10-10 03	CG1-P
26-10-10 03	CG1-P
26-10-10 03	CG2-P
26-10-10 03	CG2-P
26-10-10 03	DA19-P
26-10-10 03	DA19-P
26-10-10 03	DA20-P
26-10-10 03	DA20-P
26-10-10 03	DA31-P
26-10-10 03	DA31-P
26-10-10 03	DA5-P
26-10-10 03	DA5-P
26-10-10 03	SC-P
26-10-10 03	SC-P
26-10-20 02	CG7-P
26-10-20 02	CG7-P
26-10-20 02	DA33-P
26-10-20 02	DA33-P
26-20-10 03	CG1-P
26-20-10 03	CG1-P
26-20-10 03	CG2-P
26-20-10 03	CG2-P
26-20-10 03	DA19-P
26-20-10 03	DA19-P
26-20-10 03	DA20-P
26-20-10 03	DA20-P
27-24-10 02	CG2-P
27-24-10 02	DA19-P
27-24-10 02	DA20-P
27-24-10 02	DA35-P
27-24-10 02	DGE-P
27-24-10 02	DGF-P

PART NUMBER CH-SECT-UNIT-FIG-ITEM	IDENT
MTC100YH2-009	
27-24-10 03	CG2-P
27-24-10 03	CG2-P
27-24-10 03	DA19-P
27-24-10 03	DA19-P
27-24-10 03	DA20-P
27-24-10 03	DA20-P
27-24-10 03	DA35-P
27-24-10 03	DA35-P
27-24-10 03	DGE-P
27-24-10 03	DGE-P
27-24-10 03	DGF-P
27-24-10 03	DGF-P
27-33-00 05	CG6-P
27-33-00 05	CG7-P
27-33-00 05	DA21-P
27-33-00 05	DA31-P
27-33-00 05	DA32-P
27-33-00 05	DA33-P
27-33-00 05	DA35-P
27-33-00 05	DA5-P
27-33-00 05	DA6-P
27-33-00 05	SC-P
27-33-00 07	CG6-P
27-33-00 07	CG6-P
27-33-00 07	CG7-P
27-33-00 07	CG7-P
27-33-00 07	DA21-P
27-33-00 07	DA21-P
27-33-00 07	DA31-P
27-33-00 07	DA31-P
27-33-00 07	DA32-P
27-33-00 07	DA32-P
27-33-00 07	DA33-P
27-33-00 07	DA33-P
27-33-00 07	DA35-P
27-33-00 07	DA35-P
27-33-00 07	DA5-P
27-33-00 07	DA5-P
27-33-00 07	DA6-P
27-33-00 07	DA6-P
27-33-00 07	SC-P
27-33-00 07	SC-P
27-50-10 02	DA35-P
27-50-10 02	DA35-P
27-61-10 03	DA35-P
27-61-10 03	DA6-P
27-61-10 04	DA35-P
27-61-10 04	DA35-P
27-61-10 04	DA6-P
27-61-10 04	DA6-P

PART NUMBER CH-SECT-UNIT-FIG-ITEM	IDENT
MTC100YH2-009	
27-61-10 08	DA35-P
27-61-10 08	DA5-P
27-61-10 08	DA6-P
27-61-20 04	DA19-P
27-61-20 04	DA33-P
28-21-05 02	CG6-P
28-21-05 02	CG7-P
28-21-05 02	DA19-P
28-21-05 02	DA20-P
28-21-05 03	CG6-P
28-21-05 03	CG7-P
28-21-05 03	DA20-P
28-21-05 04	CG6-P
28-21-05 04	CG6-P
28-21-05 04	CG7-P
28-21-05 04	CG7-P
28-21-05 04	DA19-P
28-21-05 04	DA19-P
28-21-05 04	DA20-P
28-21-05 04	DA20-P
28-40-10 04	DA31-P
28-40-10 04	DA31-P
28-40-10 04	DA33-P
28-40-10 04	DA33-P
28-40-10 05	DA31-P
28-40-10 05	DA31-P
28-40-10 05	DA33-P
28-40-10 05	DA33-P
28-41-10 02	DA4-P
28-41-10 02	DA4-P
28-41-10 02	DA5-P
28-41-10 02	DA5-P
28-41-10 03	DA4-P
28-41-10 03	DA5-P
28-42-10 02	DA35-P
28-42-10 02	DA35-P
29-31-10 02	DA33-P
29-31-10 02	DA33-P
29-32-10 05	DGF-P
29-32-10 05	DGF-P
30-10-10 11	DA20-P
30-10-10 11	DA20-P
30-10-10 11	DA5-P
30-10-10 11	DA5-P
30-20-10 02	CG1-P
30-20-10 02	CG1-P
30-20-10 02	CG2-P
30-20-10 02	CG2-P
30-20-10 02	DA19-P
30-20-10 02	DA19-P

PART NUMBER CH-SECT-UNIT-FIG-ITEM	IDENT
MTC100YH2-009	
30-20-10 02	DA20-P
30-20-10 02	DA20-P
30-20-10 02	DGE-P
30-20-10 02	DGE-P
30-20-10 02	DGF-P
30-20-10 02	DGF-P
30-30-10 02	DA6-P
30-30-10 02	DA6-P
30-30-20 02	DA35-P
30-30-20 02	DA35-P
30-30-20 02	DA4-P
30-30-20 02	DA4-P
30-30-20 02	SC-P
30-30-20 02	SC-P
30-40-15 07	CG6-P
30-40-15 07	CG7-P
30-40-15 07	DA19-P
30-40-15 07	DA20-P
30-40-15 07	DA31-P
30-40-15 07	DA35-P
30-40-15 07	DA5-P
30-40-15 07	DA6-P
30-40-15 10	CG6-P
30-40-15 10	CG7-P
30-40-15 10	DA19-P
30-40-15 10	DA20-P
30-40-15 10	DA31-P
30-40-15 10	DA35-P
30-40-15 10	DA5-P
30-40-15 10	DA6-P
30-40-15 11	CG6-P
30-40-15 11	CG6-P
30-40-15 11	CG7-P
30-40-15 11	CG7-P
30-40-15 11	DA19-P
30-40-15 11	DA19-P
30-40-15 11	DA20-P
30-40-15 11	DA20-P
30-40-15 11	DA31-P
30-40-15 11	DA31-P
30-40-15 11	DA35-P
30-40-15 11	DA35-P
30-40-15 11	DA5-P
30-40-15 11	DA5-P
30-40-15 11	DA6-P
30-40-15 11	DA6-P
30-40-15 12	CG6-P
30-40-15 12	CG6-P
30-40-15 12	CG7-P
30-40-15 12	CG7-P

PART NUMBER CH-SECT-UNIT-FIG-ITEM	IDENT
MTC100YH2-009	
30-40-15 12	DA19-P
30-40-15 12	DA19-P
30-40-15 12	DA20-P
30-40-15 12	DA20-P
30-40-15 12	DA31-P
30-40-15 12	DA31-P
30-40-15 12	DA35-P
30-40-15 12	DA35-P
30-40-15 12	DA5-P
30-40-15 12	DA5-P
30-40-15 12	DA6-P
30-40-15 12	DA6-P
30-40-20 03	CG6-P
30-40-20 03	CG7-P
30-40-20 03	DA19-P
30-40-20 03	DA20-P
30-40-20 03	DA31-P
30-40-20 03	DA35-P
30-40-20 05	CG6-P
30-40-20 05	CG6-P
30-40-20 05	CG7-P
30-40-20 05	CG7-P
30-40-20 05	DA19-P
30-40-20 05	DA19-P
30-40-20 05	DA20-P
30-40-20 05	DA20-P
30-40-20 05	DA31-P
30-40-20 05	DA31-P
30-40-20 05	DA35-P
30-40-20 05	DA35-P
30-80-10 02	DA20-P
30-80-10 02	DA21-P
30-80-10 02	DA35-P
30-80-10 03	DA20-P
30-80-10 03	DA20-P
30-80-10 03	DA21-P
30-80-10 03	DA21-P
30-80-10 03	DA35-P
30-80-10 03	DA35-P
31-20-35 02	DA32-P
31-20-35 02	DA33-P
31-20-35 02	DA35-P
31-20-35 02	DGE-P
31-20-35 02	DGF-P
31-20-35 03	DA32-P
31-20-35 03	DA32-P
31-20-35 03	DA33-P
31-20-35 03	DA33-P
31-20-35 03	DA35-P
31-20-35 03	DA35-P

PART NUMBER CH-SECT-UNIT-FIG-ITEM	IDENT
MTC100YH2-009	
31-20-35 03	DGF-P
31-20-35 03	DGF-P
31-20-60 02	DA31-P
31-20-60 02	DA31-P
31-20-60 02	DA33-P
31-20-60 02	DA33-P
31-20-60 02	DA35-P
31-20-60 02	DA35-P
31-50-01 04	CG6-P
31-50-01 04	CG7-P
31-50-01 04	CY1-P
31-50-01 04	DA31-P
31-50-01 04	DA33-P
31-50-01 07	CG6-P
31-50-01 07	CG7-P
31-50-01 07	CY1-P
31-50-01 07	DA31-P
31-50-01 07	DA33-P
31-50-01 08	CG6-P
31-50-01 08	CG7-P
31-50-01 08	CY1-P
31-50-01 08	DA31-P
31-50-01 08	DA33-P
31-50-01 09	CG6-P
31-50-01 09	CG6-P
31-50-01 09	CG7-P
31-50-01 09	CG7-P
31-50-01 09	CY1-P
31-50-01 09	CY1-P
31-50-01 09	DA31-P
31-50-01 09	DA31-P
31-50-01 09	DA33-P
31-50-01 09	DA33-P
31-50-01 14	CG6-P
31-50-01 14	CG6-P
31-50-01 14	CG7-P
31-50-01 14	CG7-P
31-50-01 14	CY1-P
31-50-01 14	CY1-P
31-50-01 14	DA31-P
31-50-01 14	DA31-P
31-50-01 14	DA33-P
31-50-01 14	DA33-P
31-50-01 14	DA6-P
31-50-01 14	DA6-P
32-60-10 04	CG6-P
32-60-10 04	CG6-P
32-60-10 04	DA33-P
32-60-10 04	DA33-P
32-60-10 04	DA35-P

PART NUMBER CH-SECT-UNIT-FIG-ITEM	IDENT
MTC100YH2-009	
32-60-10 04	DA35-P
32-60-10 04	DA5-P
32-60-10 04	DA5-P
32-60-10 04	DA6-P
32-60-10 04	DA6-P
32-60-10 04	DGE-P
32-60-10 04	DGE-P
32-60-20 02	DA35-P
32-60-20 02	DA35-P
33-10-05 05	CG6-P
33-10-05 05	CY1-P
33-10-05 05	CY3-P
33-10-05 05	DA19-P
33-10-05 05	DA20-P
33-10-05 05	DA21-P
33-10-05 05	DA31-P
33-10-05 05	DA32-P
33-10-05 05	SC-P
33-10-05 07	CG6-P
33-10-05 07	CY1-P
33-10-05 07	CY3-P
33-10-05 07	DA19-P
33-10-05 07	DA20-P
33-10-05 07	DA21-P
33-10-05 07	DA31-P
33-10-05 07	DA32-P
33-10-05 07	SC-P
33-10-05 08	CG6-P
33-10-05 08	CY1-P
33-10-05 08	CY3-P
33-10-05 08	DA19-P
33-10-05 08	DA20-P
33-10-05 08	DA21-P
33-10-05 08	DA31-P
33-10-05 08	DA32-P
33-10-05 08	SC-P
33-10-05 09	CG6-P
33-10-05 09	CG6-P
33-10-05 09	CY1-P
33-10-05 09	CY1-P
33-10-05 09	CY3-P
33-10-05 09	CY3-P
33-10-05 09	DA19-P
33-10-05 09	DA19-P
33-10-05 09	DA20-P
33-10-05 09	DA20-P
33-10-05 09	DA21-P
33-10-05 09	DA21-P
33-10-05 09	DA31-P
33-10-05 09	DA31-P

PART NUMBER CH-SECT-UNIT-FIG-ITEM	IDENT
MTC100YH2-009	
33-10-05 09	DA32-P
33-10-05 09	DA32-P
33-10-05 09	SC-P
33-10-05 09	SC-P
33-10-05 11	CG6-P
33-10-05 11	CG6-P
33-10-05 11	CY1-P
33-10-05 11	CY1-P
33-10-05 11	CY3-P
33-10-05 11	CY3-P
33-10-05 11	DA19-P
33-10-05 11	DA19-P
33-10-05 11	DA20-P
33-10-05 11	DA20-P
33-10-05 11	DA21-P
33-10-05 11	DA21-P
33-10-05 11	DA31-P
33-10-05 11	DA31-P
33-10-05 11	DA32-P
33-10-05 11	DA32-P
33-10-05 11	SC-P
33-10-05 11	SC-P
33-10-10 31	CY3-P
33-10-20 04	CY1-P
33-10-20 04	CY3-P
33-10-20 04	DA32-P
33-10-20 04	DA6-P
33-10-20 07	CY1-P
33-10-20 07	CY3-P
33-10-20 07	DA32-P
33-10-20 07	DA6-P
33-10-20 08	CY1-P
33-10-20 08	CY1-P
33-10-20 08	CY3-P
33-10-20 08	CY3-P
33-10-20 08	DA32-P
33-10-20 08	DA32-P
33-10-20 08	DA6-P
33-10-20 08	DA6-P
33-20-10 10	CG6-P
33-20-10 10	DA21-P
33-30-05 08	SC-P
33-30-05 08	SC-P
33-30-15 07	DA21-P
33-40-10 05	CG2-P
33-40-10 05	CG2-P
33-40-10 05	CG7-P
33-40-10 05	CG7-P
33-40-10 05	DA20-P
33-40-10 05	DA20-P

PART NUMBER CH-SECT-UNIT-FIG-ITEM	IDENT
MTC100YH2-009	
33-40-10 06	CG2-P
33-40-10 06	CG7-P
33-40-10 06	DA20-P
33-40-20 04	CG6-P
33-40-20 04	CG6-P
33-40-20 04	CG7-P
33-40-20 04	CG7-P
33-40-20 04	DA19-P
33-40-20 04	DA19-P
33-40-20 04	DA20-P
33-40-20 04	DA20-P
33-40-30 03	CG6-P
33-40-30 03	CG6-P
33-40-30 03	DA21-P
33-40-30 03	DA21-P
33-50-10 09	CG7-P
33-50-10 09	CG7-P
34-13-01 04	DA19-P
34-13-01 04	DA19-P
34-13-01 04	DA20-P
34-13-01 04	DA20-P
34-13-01 08	DA19-P
34-13-01 08	DA19-P
34-13-01 08	DA20-P
34-13-01 08	DA20-P
49-60-10 05	DHE-P
49-60-10 05	DHE-P
49-60-30 06	CG2-P
49-60-30 08	CG2-P
49-60-30 08	CG2-P
49-60-30 08	DA4-P
49-60-30 08	DA4-P
49-60-30 09	CG2-P
49-60-30 09	DA4-P
49-60-30 11	CG2-P
49-60-30 11	DA4-P
52-70-10 02	DA31-P
52-70-10 02	DA31-P
73-20-01 05	CG1-P
73-20-01 05	CG1-P
73-20-01 05	DGE-P
73-20-01 05	DGE-P
73-20-02 05	CG7-P
73-20-02 05	CG7-P
73-20-10 03	CG1-P
73-20-10 03	CG1-P
73-20-10 03	DA4-P
73-20-10 03	DA4-P
73-20-10 03	DA5-P
73-20-10 03	DA5-P

PART NUMBER CH-SECT-UNIT-FIG-ITEM	IDENT
MTC100YH2-009	
77-10-10 02	DGE-P
77-10-10 02	DGE-P
77-10-10 02	DGF-P
77-10-10 02	DGF-P
79-30-10 02	DA31-P
79-30-10 02	DA31-P
79-30-10 02	DA33-P
79-30-10 02	DA33-P
79-30-10 02	DGE-P
79-30-10 02	DGE-P
79-30-10 02	DGF-P
79-30-10 02	DGF-P
80-10-10 04	CG1-P
80-10-10 04	CG1-P
80-10-10 04	CG2-P
80-10-10 04	CG2-P
80-10-10 04	CG6-P
80-10-10 04	CG6-P
80-10-10 04	CG7-P
80-10-10 04	CG7-P
80-10-10 04	DGE-P
80-10-10 04	DGE-P
80-10-10 04	DGF-P
80-10-10 04	DGF-P
MTC100YH2-010	
21-20-10 03	CG7-R
21-20-10 03	CG7-R
21-20-10 03	DA20-R
21-20-10 03	DA20-R
21-30-10 02	DA21-R
21-30-10 04	DA21-R
21-30-10 04	DA21-R
21-31-10 07	DA20-R
21-31-10 07	DA20-R
21-31-10 07	DA31-R
21-31-10 07	DA31-R
21-31-10 07	DA32-R
21-31-10 07	DA32-R
21-31-10 07	DA33-R
21-31-10 07	DA33-R
21-31-10 07	DA35-R
21-31-10 07	DA35-R
21-60-10 08	CG1-R
21-60-10 08	CG2-R
21-60-10 08	CG6-R
21-60-10 08	CG7-R
21-60-10 08	DA19-R
21-60-10 08	DA20-R
21-60-10 08	DA21-R
21-60-10 08	DA35-R

PART NUMBER CH-SECT-UNIT-FIG-ITEM	IDENT
MTC100YH2-010	
21-60-10 08	DA4-R
21-60-10 10	CG1-R
21-60-10 10	CG2-R
21-60-10 10	CG6-R
21-60-10 10	CG7-R
21-60-10 10	DA19-R
21-60-10 10	DA20-R
21-60-10 10	DA21-R
21-60-10 10	DA35-R
21-60-10 10	DA4-R
21-60-10 11	CG1-R
21-60-10 11	CG1-R
21-60-10 11	CG2-R
21-60-10 11	CG2-R
21-60-10 11	CG6-R
21-60-10 11	CG6-R
21-60-10 11	CG7-R
21-60-10 11	CG7-R
21-60-10 11	DA19-R
21-60-10 11	DA19-R
21-60-10 11	DA20-R
21-60-10 11	DA20-R
21-60-10 11	DA21-R
21-60-10 11	DA21-R
21-60-10 11	DA35-R
21-60-10 11	DA35-R
21-60-10 11	DA4-R
21-60-10 11	DA4-R
21-60-20 02	CG7-R
21-60-20 02	DA19-R
21-60-20 02	DA20-R
21-60-20 03	CG7-R
21-60-20 03	CG7-R
21-60-20 03	DA19-R
21-60-20 03	DA19-R
21-60-20 03	DA20-R
21-60-20 03	DA20-R
24-21-17 03	DA21-R
24-21-17 04	DA21-R
24-21-17 04	DA21-R
24-30-10 02	CG1-R
24-30-10 02	CG1-R
24-30-20 02	DA4-R
24-30-20 02	DA4-R
24-30-20 03	DA4-R
24-30-20 03	DA4-R
24-50-01 05	CG1-R
24-50-01 05	CG2-R
24-50-01 05	DA19-R
24-50-01 05	DA20-R

PART NUMBER CH-SECT-UNIT-FIG-ITEM	IDENT
MTC100YH2-010	
24-50-01 05	DA21-R
24-50-01 05	DA4-R
24-50-01 06	CG1-R
24-50-01 06	CG1-R
24-50-01 06	CG2-R
24-50-01 06	CG2-R
24-50-01 06	DA19-R
24-50-01 06	DA19-R
24-50-01 06	DA20-R
24-50-01 06	DA20-R
24-50-01 06	DA21-R
24-50-01 06	DA21-R
24-50-01 06	DA4-R
24-50-01 06	DA4-R
24-50-01 07	CG1-R
24-50-01 07	CG1-R
24-50-01 07	CG2-R
24-50-01 07	CG2-R
24-50-01 07	DA19-R
24-50-01 07	DA19-R
24-50-01 07	DA20-R
24-50-01 07	DA20-R
24-50-01 07	DA21-R
24-50-01 07	DA21-R
24-50-01 07	DA4-R
24-50-01 07	DA4-R
26-10-10 03	CG1-R
26-10-10 03	CG1-R
26-10-10 03	CG2-R
26-10-10 03	CG2-R
26-10-10 03	DA19-R
26-10-10 03	DA19-R
26-10-10 03	DA20-R
26-10-10 03	DA20-R
26-10-10 03	DA31-R
26-10-10 03	DA31-R
26-10-10 03	DA5-R
26-10-10 03	DA5-R
26-10-10 03	SC-R
26-10-10 03	SC-R
26-10-20 02	CG7-R
26-10-20 02	CG7-R
26-10-20 02	DA33-R
26-10-20 02	DA33-R
26-20-10 03	CG1-R
26-20-10 03	CG1-R
26-20-10 03	CG2-R
26-20-10 03	CG2-R
26-20-10 03	DA19-R
26-20-10 03	DA19-R

PART NUMBER CH-SECT-UNIT-FIG-ITEM	IDENT
MTC100YH2-010	
26-20-10 03	DA20-R
26-20-10 03	DA20-R
27-24-10 02	CG2-R
27-24-10 02	DA19-R
27-24-10 02	DA20-R
27-24-10 02	DA35-R
27-24-10 02	DGE-R
27-24-10 02	DGF-R
27-24-10 03	CG2-R
27-24-10 03	CG2-R
27-24-10 03	DA19-R
27-24-10 03	DA19-R
27-24-10 03	DA20-R
27-24-10 03	DA20-R
27-24-10 03	DA35-R
27-24-10 03	DA35-R
27-24-10 03	DGE-R
27-24-10 03	DGE-R
27-24-10 03	DGF-R
27-24-10 03	DGF-R
27-33-00 05	CG6-R
27-33-00 05	CG7-R
27-33-00 05	DA21-R
27-33-00 05	DA31-R
27-33-00 05	DA32-R
27-33-00 05	DA33-R
27-33-00 05	DA35-R
27-33-00 05	DA5-R
27-33-00 05	DA6-R
27-33-00 05	SC-R
27-33-00 07	CG6-R
27-33-00 07	CG6-R
27-33-00 07	CG7-R
27-33-00 07	CG7-R
27-33-00 07	DA21-R
27-33-00 07	DA21-R
27-33-00 07	DA31-R
27-33-00 07	DA31-R
27-33-00 07	DA32-R
27-33-00 07	DA32-R
27-33-00 07	DA33-R
27-33-00 07	DA33-R
27-33-00 07	DA35-R
27-33-00 07	DA35-R
27-33-00 07	DA5-R
27-33-00 07	DA5-R
27-33-00 07	DA6-R
27-33-00 07	DA6-R
27-33-00 07	SC-R
27-33-00 07	SC-R

PART NUMBER CH-SECT-UNIT-FIG-ITEM	IDENT
MTC100YH2-010	
27-50-10 02	DA35-R
27-50-10 02	DA35-R
27-61-10 03	DA35-R
27-61-10 03	DA6-R
27-61-10 04	DA35-R
27-61-10 04	DA35-R
27-61-10 04	DA6-R
27-61-10 04	DA6-R
27-61-10 08	DA35-R
27-61-10 08	DA5-R
27-61-10 08	DA6-R
27-61-20 04	DA19-R
27-61-20 04	DA33-R
28-21-05 02	CG6-R
28-21-05 02	CG7-R
28-21-05 02	DA19-R
28-21-05 02	DA20-R
28-21-05 03	CG6-R
28-21-05 03	CG7-R
28-21-05 03	DA20-R
28-21-05 04	CG6-R
28-21-05 04	CG6-R
28-21-05 04	CG7-R
28-21-05 04	CG7-R
28-21-05 04	DA19-R
28-21-05 04	DA19-R
28-21-05 04	DA20-R
28-21-05 04	DA20-R
28-40-10 04	DA31-R
28-40-10 04	DA31-R
28-40-10 04	DA33-R
28-40-10 04	DA33-R
28-40-10 05	DA31-R
28-40-10 05	DA31-R
28-40-10 05	DA33-R
28-40-10 05	DA33-R
28-41-10 02	DA4-R
28-41-10 02	DA4-R
28-41-10 02	DA5-R
28-41-10 02	DA5-R
28-41-10 03	DA4-R
28-41-10 03	DA5-R
28-42-10 02	DA35-R
28-42-10 02	DA35-R
29-31-10 02	DA33-R
29-31-10 02	DA33-R
29-32-10 05	DGF-R
29-32-10 05	DGF-R
30-10-10 11	DA20-R
30-10-10 11	DA20-R

PART NUMBER CH-SECT-UNIT-FIG-ITEM	IDENT
MTC100YH2-010	
30-10-10 11	DA5-R
30-10-10 11	DA5-R
30-20-10 02	CG1-R
30-20-10 02	CG1-R
30-20-10 02	CG2-R
30-20-10 02	CG2-R
30-20-10 02	DA19-R
30-20-10 02	DA19-R
30-20-10 02	DA20-R
30-20-10 02	DA20-R
30-20-10 02	DGE-R
30-20-10 02	DGE-R
30-20-10 02	DGF-R
30-20-10 02	DGF-R
30-30-10 02	DA6-R
30-30-10 02	DA6-R
30-30-20 02	DA35-R
30-30-20 02	DA35-R
30-30-20 02	DA4-R
30-30-20 02	DA4-R
30-30-20 02	SC-R
30-30-20 02	SC-R
30-40-15 07	CG6-R
30-40-15 07	CG7-R
30-40-15 07	DA19-R
30-40-15 07	DA20-R
30-40-15 07	DA31-R
30-40-15 07	DA35-R
30-40-15 07	DA5-R
30-40-15 07	DA6-R
30-40-15 10	CG6-R
30-40-15 10	CG7-R
30-40-15 10	DA19-R
30-40-15 10	DA20-R
30-40-15 10	DA31-R
30-40-15 10	DA35-R
30-40-15 10	DA5-R
30-40-15 10	DA6-R
30-40-15 11	CG6-R
30-40-15 11	CG6-R
30-40-15 11	CG7-R
30-40-15 11	CG7-R
30-40-15 11	DA19-R
30-40-15 11	DA19-R
30-40-15 11	DA20-R
30-40-15 11	DA20-R
30-40-15 11	DA31-R
30-40-15 11	DA31-R
30-40-15 11	DA35-R
30-40-15 11	DA35-R

PART NUMBER CH-SECT-UNIT-FIG-ITEM	IDENT
MTC100YH2-010	
30-40-15 11	DA5-R
30-40-15 11	DA5-R
30-40-15 11	DA6-R
30-40-15 11	DA6-R
30-40-15 12	CG6-R
30-40-15 12	CG6-R
30-40-15 12	CG7-R
30-40-15 12	CG7-R
30-40-15 12	DA19-R
30-40-15 12	DA19-R
30-40-15 12	DA20-R
30-40-15 12	DA20-R
30-40-15 12	DA31-R
30-40-15 12	DA31-R
30-40-15 12	DA35-R
30-40-15 12	DA35-R
30-40-15 12	DA5-R
30-40-15 12	DA5-R
30-40-15 12	DA6-R
30-40-15 12	DA6-R
30-40-20 03	CG6-R
30-40-20 03	CG7-R
30-40-20 03	DA19-R
30-40-20 03	DA20-R
30-40-20 03	DA31-R
30-40-20 03	DA35-R
30-40-20 05	CG6-R
30-40-20 05	CG6-R
30-40-20 05	CG7-R
30-40-20 05	CG7-R
30-40-20 05	DA19-R
30-40-20 05	DA19-R
30-40-20 05	DA20-R
30-40-20 05	DA20-R
30-40-20 05	DA31-R
30-40-20 05	DA31-R
30-40-20 05	DA35-R
30-40-20 05	DA35-R
30-80-10 02	DA20-R
30-80-10 02	DA21-R
30-80-10 02	DA35-R
30-80-10 03	DA20-R
30-80-10 03	DA20-R
30-80-10 03	DA21-R
30-80-10 03	DA21-R
30-80-10 03	DA35-R
30-80-10 03	DA35-R
31-20-35 02	DA32-R
31-20-35 02	DA33-R
31-20-35 02	DA35-R

PART NUMBER CH-SECT-UNIT-FIG-ITEM	IDENT
MTC100YH2-010	
31-20-35 02	DGE-R
31-20-35 02	DGF-R
31-20-35 03	DA32-R
31-20-35 03	DA32-R
31-20-35 03	DA33-R
31-20-35 03	DA33-R
31-20-35 03	DA35-R
31-20-35 03	DA35-R
31-20-35 03	DGF-R
31-20-35 03	DGF-R
31-20-60 02	DA31-R
31-20-60 02	DA31-R
31-20-60 02	DA33-R
31-20-60 02	DA33-R
31-20-60 02	DA35-R
31-20-60 02	DA35-R
31-50-01 04	CG6-R
31-50-01 04	CG7-R
31-50-01 04	CY1-R
31-50-01 04	DA31-R
31-50-01 04	DA33-R
31-50-01 07	CG6-R
31-50-01 07	CG7-R
31-50-01 07	CY1-R
31-50-01 07	DA31-R
31-50-01 07	DA33-R
31-50-01 08	CG6-R
31-50-01 08	CG7-R
31-50-01 08	CY1-R
31-50-01 08	DA31-R
31-50-01 08	DA33-R
31-50-01 09	CG6-R
31-50-01 09	CG6-R
31-50-01 09	CG7-R
31-50-01 09	CG7-R
31-50-01 09	CY1-R
31-50-01 09	CY1-R
31-50-01 09	DA31-R
31-50-01 09	DA31-R
31-50-01 09	DA33-R
31-50-01 09	DA33-R
31-50-01 14	CG6-R
31-50-01 14	CG6-R
31-50-01 14	CG7-R
31-50-01 14	CG7-R
31-50-01 14	CY1-R
31-50-01 14	CY1-R
31-50-01 14	DA31-R
31-50-01 14	DA31-R
31-50-01 14	DA33-R

PART NUMBER CH-SECT-UNIT-FIG-ITEM	IDENT
MTC100YH2-010	
31-50-01 14	DA33-R
31-50-01 14	DA6-R
31-50-01 14	DA6-R
32-60-10 04	CG6-R
32-60-10 04	CG6-R
32-60-10 04	DA33-R
32-60-10 04	DA33-R
32-60-10 04	DA35-R
32-60-10 04	DA35-R
32-60-10 04	DA5-R
32-60-10 04	DA5-R
32-60-10 04	DA6-R
32-60-10 04	DA6-R
32-60-10 04	DGE-R
32-60-10 04	DGE-R
32-60-20 02	DA35-R
32-60-20 02	DA35-R
33-10-05 05	CG6-R
33-10-05 05	CY1-R
33-10-05 05	CY3-R
33-10-05 05	DA19-R
33-10-05 05	DA20-R
33-10-05 05	DA21-R
33-10-05 05	DA31-R
33-10-05 05	DA32-R
33-10-05 05	SC-R
33-10-05 07	CG6-R
33-10-05 07	CY1-R
33-10-05 07	CY3-R
33-10-05 07	DA19-R
33-10-05 07	DA20-R
33-10-05 07	DA21-R
33-10-05 07	DA31-R
33-10-05 07	DA32-R
33-10-05 07	SC-R
33-10-05 08	CG6-R
33-10-05 08	CY1-R
33-10-05 08	CY3-R
33-10-05 08	DA19-R
33-10-05 08	DA20-R
33-10-05 08	DA21-R
33-10-05 08	DA31-R
33-10-05 08	DA32-R
33-10-05 08	SC-R
33-10-05 09	CG6-R
33-10-05 09	CG6-R
33-10-05 09	CY1-R
33-10-05 09	CY1-R
33-10-05 09	CY3-R
33-10-05 09	CY3-R

PART NUMBER CH-SECT-UNIT-FIG-ITEM	IDENT
MTC100YH2-010	
33-10-05 09	DA19-R
33-10-05 09	DA19-R
33-10-05 09	DA20-R
33-10-05 09	DA20-R
33-10-05 09	DA21-R
33-10-05 09	DA21-R
33-10-05 09	DA31-R
33-10-05 09	DA31-R
33-10-05 09	DA32-R
33-10-05 09	DA32-R
33-10-05 09	SC-R
33-10-05 09	SC-R
33-10-05 11	CG6-R
33-10-05 11	CG6-R
33-10-05 11	CY1-R
33-10-05 11	CY1-R
33-10-05 11	CY3-R
33-10-05 11	CY3-R
33-10-05 11	DA19-R
33-10-05 11	DA19-R
33-10-05 11	DA20-R
33-10-05 11	DA20-R
33-10-05 11	DA21-R
33-10-05 11	DA21-R
33-10-05 11	DA31-R
33-10-05 11	DA31-R
33-10-05 11	DA32-R
33-10-05 11	DA32-R
33-10-05 11	SC-R
33-10-05 11	SC-R
33-10-10 31	CY3-R
33-10-20 04	CY1-R
33-10-20 04	CY3-R
33-10-20 04	DA32-R
33-10-20 04	DA6-R
33-10-20 07	CY1-R
33-10-20 07	CY3-R
33-10-20 07	DA32-R
33-10-20 07	DA6-R
33-10-20 08	CY1-R
33-10-20 08	CY1-R
33-10-20 08	CY3-R
33-10-20 08	CY3-R
33-10-20 08	DA32-R
33-10-20 08	DA32-R
33-10-20 08	DA6-R
33-10-20 08	DA6-R
33-20-10 10	CG6-R
33-20-10 10	DA21-R
33-30-05 08	SC-R

PART NUMBER CH-SECT-UNIT-FIG-ITEM	IDENT
MTC100YH2-010	
33-30-05 08	SC-R
33-30-15 07	DA21-R
33-40-10 05	CG2-R
33-40-10 05	CG2-R
33-40-10 05	CG7-R
33-40-10 05	CG7-R
33-40-10 05	DA20-R
33-40-10 05	DA20-R
33-40-10 06	CG2-R
33-40-10 06	CG7-R
33-40-10 06	DA20-R
33-40-20 04	CG6-R
33-40-20 04	CG6-R
33-40-20 04	CG7-R
33-40-20 04	CG7-R
33-40-20 04	DA19-R
33-40-20 04	DA19-R
33-40-20 04	DA20-R
33-40-20 04	DA20-R
33-40-30 03	CG6-R
33-40-30 03	CG6-R
33-40-30 03	DA21-R
33-40-30 03	DA21-R
33-50-10 09	CG7-R
33-50-10 09	CG7-R
34-13-01 04	DA19-R
34-13-01 04	DA19-R
34-13-01 04	DA20-R
34-13-01 04	DA20-R
34-13-01 08	DA19-R
34-13-01 08	DA19-R
34-13-01 08	DA20-R
34-13-01 08	DA20-R
49-60-10 05	DHE-R
49-60-10 05	DHE-R
49-60-30 06	CG2-R
49-60-30 08	CG2-R
49-60-30 08	CG2-R
49-60-30 08	DA4-R
49-60-30 08	DA4-R
49-60-30 09	CG2-R
49-60-30 09	DA4-R
49-60-30 11	CG2-R
49-60-30 11	DA4-R
52-70-10 02	DA31-R
52-70-10 02	DA31-R
73-20-01 05	CG1-R
73-20-01 05	CG1-R
73-20-01 05	DGE-R
73-20-01 05	DGE-R

PART NUMBER CH-SECT-UNIT-FIG-ITEM	IDENT
MTC100YH2-010	
73-20-02 05	CG7-R
73-20-02 05	CG7-R
73-20-10 03	CG1-R
73-20-10 03	CG1-R
73-20-10 03	DA4-R
73-20-10 03	DA4-R
73-20-10 03	DA5-R
73-20-10 03	DA5-R
77-10-10 02	DGE-R
77-10-10 02	DGE-R
77-10-10 02	DGF-R
77-10-10 02	DGF-R
79-30-10 02	DA31-R
79-30-10 02	DA31-R
79-30-10 02	DA33-R
79-30-10 02	DA33-R
79-30-10 02	DGE-R
79-30-10 02	DGE-R
79-30-10 02	DGF-R
79-30-10 02	DGF-R
80-10-10 04	CG1-R
80-10-10 04	CG1-R
80-10-10 04	CG2-R
80-10-10 04	CG2-R
80-10-10 04	CG6-R
80-10-10 04	CG6-R
80-10-10 04	CG7-R
80-10-10 04	CG7-R
80-10-10 04	DGE-R
80-10-10 04	DGE-R
80-10-10 04	DGF-R
80-10-10 04	DGF-R
MTC10104S	
33-30-15 07	DA38-R
33-40-20 04	DA38-R
33-40-20 04	DA39-R
MTC16104P	
33-30-15 07	DA38-P
33-40-20 04	DA38-P
33-40-20 04	DA39-P
M05-680R	
30-40-20 03	D-DAB
30-40-20 05	D-DAB
30-40-20 05	E-DAB
M12883-40-19	
24-21-17 03	CD-ZK
24-21-17 04	CD-ZK
27-33-00 05	GA-DAB
27-33-00 05	GC-DAB
27-33-00 05	GE-DAB

PART NUMBER CH-SECT-UNIT-FIG-ITEM	IDENT
M12883-40-19	
27-33-00 05	GG-DAB
27-33-00 05	GJ-DAB
27-33-00 05	JA-DAB
27-33-00 05	JC-DAB
27-33-00 05	JE-DAB
27-33-00 05	JG-DAB
27-33-00 05	JJ-DAB
27-33-00 07	GA-DAB
27-33-00 07	GC-DAB
27-33-00 07	GE-DAB
27-33-00 07	GG-DAB
27-33-00 07	GJ-DAB
27-33-00 07	JA-DAB
27-33-00 07	JC-DAB
27-33-00 07	JE-DAB
27-33-00 07	JG-DAB
27-33-00 07	JJ-DAB
27-61-10 08	DE-DAB
27-61-20 04	JA-DAB
28-41-30 02	GF-DB
30-40-15 07	DG-DAB
30-40-15 10	DG-DAB
30-40-15 11	DG-DAB
30-40-15 12	DG-DAB
31-50-05 03	B-ZJ
31-50-05 03	C-ZJ
31-50-05 03	D-ZJ
32-60-10 04	CD-ZK
33-10-05 05	DA-DAB
33-10-05 05	DC-DAB
33-10-05 05	DE-DAB
33-10-05 07	DA-DAB
33-10-05 07	DC-DAB
33-10-05 07	DE-DAB
33-10-05 08	DA-DAB
33-10-05 08	DC-DAB
33-10-05 08	DE-DAB
33-10-05 09	DA-DAB
33-10-05 09	DC-DAB
33-10-05 09	DE-DAB
33-10-05 11	DA-DAB
33-10-05 11	DC-DAB
33-10-05 11	DE-DAB
33-10-20 04	DA-DAB
33-10-20 04	DC-DAB
33-10-20 04	DE-DAB
33-10-20 07	DA-DAB
33-10-20 07	DC-DAB
33-10-20 07	DE-DAB
33-10-20 08	DA-DAB

PART NUMBER CH-SECT-UNIT-FIG-ITEM	IDENT
M12883-40-19	
33-10-20 08	DC-DAB
33-10-20 08	DE-DAB
33-30-05 07	ST
49-60-10 05	BS-ZK
49-60-30 06	BS-ZK
49-60-30 06	K1-ZKA
49-60-30 08	BS-ZK
49-60-30 08	K1-ZKA
49-60-30 09	BS-ZK
49-60-30 09	K1-ZKA
49-60-30 11	BS-ZK
49-60-30 11	K1-ZKA
73-20-10 03	DG-DAB
77-10-10 02	AK-GG
77-10-10 02	AL-GG
77-10-10 02	AM-GG
77-20-10 02	AL-GG
77-20-10 02	AM-GG
80-10-10 04	BM-ZK
80-10-10 04	BS-ZK
80-10-10 04	BU-ZK
80-10-10 04	CC-ZK
80-10-10 04	CD-ZK
M12883-40-20	
24-21-17 03	CJ-DAB
24-21-17 04	CJ-DAB
M12883-40-23	
28-41-20 03	GF-DB
28-41-20 03	GG-DB
M12883-40-24	
27-33-00 05	GL-DAB
27-33-00 05	HA-DAB
27-33-00 05	JL-DAB
27-33-00 07	GL-DAB
27-33-00 07	HA-DAB
27-33-00 07	JL-DAB
M12883-41-16	
21-30-10 04	HG-DAB
21-60-10 10	HG-DAB
21-60-10 10	HH-DAB
21-60-10 10	HJ-DAB
21-60-10 11	D-ZT
21-60-10 11	E-ZT
21-60-10 11	G-ZT
21-60-10 11	H-ZT
21-60-10 11	HG-DAB
21-60-10 11	HH-DAB
21-60-10 11	HJ-DAB
21-60-10 11	J-ZT
24-30-10 02	BE-ZK

PART NUMBER CH-SECT-UNIT-FIG-ITEM	IDENT
M12883-41-16	
24-30-10 02	EA-DAB
24-30-20 02	BE-ZK
24-30-20 03	BE-ZK
24-50-01 05	BE-ZK
24-50-01 05	BJ-ZK
24-50-01 05	BK-ZK
24-50-01 05	CP-ZK
24-50-01 06	BE-ZK
24-50-01 06	BJ-ZK
24-50-01 06	BK-ZK
24-50-01 06	CP-ZK
24-50-01 07	BE-ZK
24-50-01 07	BJ-ZK
24-50-01 07	BK-ZK
24-50-01 07	CP-ZK
27-00-10 03	BP-ZK
27-00-10 03	BX-ZK
27-00-10 04	BP-ZK
27-00-10 04	BX-ZK
27-33-00 05	HC-DAB
27-33-00 05	HD-DAB
27-33-00 05	HE-DAB
27-33-00 05	KA-DAB
27-33-00 05	KC-DAB
27-33-00 05	KD-DAB
27-33-00 05	KE-DAB
27-33-00 07	HC-DAB
27-33-00 07	HD-DAB
27-33-00 07	HE-DAB
27-33-00 07	KA-DAB
27-33-00 07	KC-DAB
27-33-00 07	KD-DAB
27-33-00 07	KE-DAB
27-61-10 03	EF-DAB
27-61-10 04	EF-DAB
27-61-10 08	EF-DAB
27-61-20 04	LC-EP
28-41-30 02	GA-DB
28-41-30 02	GM-DB
30-20-10 02	AN-GG
30-20-10 02	AV-GG
30-30-10 02	EE-DAB
30-30-10 02	FG-DAB
30-30-20 02	CQ-ZK
30-30-20 02	CR-ZK
30-30-20 02	CS-ZK
30-30-20 02	CX-ZK
30-30-20 02	FE-DAJ
30-30-20 02	FF-DAJ
30-80-10 02	EE-DAB

PART NUMBER CH-SECT-UNIT-FIG-ITEM	IDENT
M12883-41-16	
30-80-10 03	EE-DAB
31-50-05 03	A-ZJ
32-60-10 04	ED-DAB
32-60-30 02	BP-ZK
32-60-30 02	EE-DAB
32-60-30 03	BP-ZK
32-60-30 03	EE-DAB
33-10-20 04	EC-DAB
33-10-20 07	EC-DAB
33-10-20 08	EC-DAB
33-20-10 10	SV
34-13-01 04	EG-DAB
34-13-01 04	FH-DAB
34-13-01 08	EG-DAB
34-13-01 08	FH-DAB
49-60-10 05	BR-ZK
49-60-10 05	C-ZKA
49-60-10 05	E-ZKA
49-60-10 05	G-ZKA
49-60-10 05	H-ZKA
49-60-30 06	A
49-60-30 06	BE-ZK
49-60-30 06	BR-ZK
49-60-30 06	CP-ZK
49-60-30 06	K2-ZKA
49-60-30 06	K3-ZKA
49-60-30 06	K5-ZKA
49-60-30 06	K6-ZKA
49-60-30 06	K7-ZKA
49-60-30 06	K8-ZKA
49-60-30 08	A
49-60-30 08	BE-ZK
49-60-30 08	CP-ZK
49-60-30 08	K2-ZKA
49-60-30 08	K3-ZKA
49-60-30 08	K5-ZKA
49-60-30 08	K6-ZKA
49-60-30 08	K7-ZKA
49-60-30 08	K8-ZKA
49-60-30 09	A
49-60-30 09	BE-ZK
49-60-30 09	CP-ZK
49-60-30 09	K2-ZKA
49-60-30 09	K3-ZKA
49-60-30 09	K5-ZKA
49-60-30 09	K6-ZKA
49-60-30 09	K7-ZKA
49-60-30 09	K8-ZKA
49-60-30 11	A
49-60-30 11	BE-ZK

PART NUMBER CH-SECT-UNIT-FIG-ITEM	IDENT
M12883-41-16	
49-60-30 11	CP-ZK
49-60-30 11	K3-ZKA
49-60-30 11	K5-ZKA
49-60-30 11	K6-ZKA
49-60-30 11	K7-ZKA
49-60-30 11	K8-ZKA
73-20-01 05	CL-ZK
73-20-02 05	CM-ZK
73-20-10 03	BF-ZK
73-20-10 03	BH-ZK
73-20-10 03	CA-ZK
73-20-10 03	CB-ZK
73-20-10 03	DJ-DAB
80-10-10 04	BG-ZK
80-10-10 04	BR-ZK
M12883-41-19	
28-41-20 03	GK-DB
M12883-48-02	
30-40-15 07	FA-DAB
30-40-15 07	FC-DAB
30-40-15 10	FA-DAB
30-40-15 10	FC-DAB
30-40-15 11	FA-DAB
30-40-15 11	FC-DAB
30-40-15 12	FA-DAB
30-40-15 12	FC-DAB
30-40-20 03	CA-DAB
30-40-20 03	CC-DAB
30-40-20 03	CE-DAB
30-40-20 03	CG-DAB
30-40-20 05	CA-DAB
30-40-20 05	CC-DAB
30-40-20 05	CE-DAB
30-40-20 05	CG-DAB
M2641	
33-10-05 05	WL
33-10-05 07	WL
33-10-05 08	WL
33-10-05 09	WL
33-10-05 11	WL
M300-126A	
33-30-15 07	DM-DAB
M300-1264	
21-30-10 04	HG-DAB
21-60-10 10	HG-DAB
21-60-10 10	HH-DAB
21-60-10 10	HJ-DAB
21-60-10 11	D-ZT
21-60-10 11	E-ZT
21-60-10 11	G-ZT

PART NUMBER CH-SECT-UNIT-FIG-ITEM	IDENT
M300-1264	
21-60-10 11	H-ZT
21-60-10 11	HG-DAB
21-60-10 11	HH-DAB
21-60-10 11	HJ-DAB
21-60-10 11	J-ZT
24-30-10 02	BE-ZK
24-30-10 02	EA-DAB
24-30-20 02	BE-ZK
24-30-20 02	EB-DAB
24-30-20 03	BE-ZK
24-30-20 03	EB-DAB
24-50-01 05	BE-ZK
24-50-01 05	BJ-ZK
24-50-01 05	BK-ZK
24-50-01 05	CP-ZK
24-50-01 06	BE-ZK
24-50-01 06	BJ-ZK
24-50-01 06	BK-ZK
24-50-01 06	CP-ZK
24-50-01 07	BE-ZK
24-50-01 07	BJ-ZK
24-50-01 07	BK-ZK
24-50-01 07	CP-ZK
27-00-10 03	BP-ZK
27-00-10 03	BX-ZK
27-00-10 04	BP-ZK
27-00-10 04	BX-ZK
27-33-00 05	HC-DAB
27-33-00 05	HD-DAB
27-33-00 05	HE-DAB
27-33-00 05	KA-DAB
27-33-00 05	KC-DAB
27-33-00 05	KD-DAB
27-33-00 05	KE-DAB
27-33-00 07	HC-DAB
27-33-00 07	HD-DAB
27-33-00 07	HE-DAB
27-33-00 07	KA-DAB
27-33-00 07	KC-DAB
27-33-00 07	KD-DAB
27-33-00 07	KE-DAB
27-61-10 03	EF-DAB
27-61-10 04	EF-DAB
27-61-10 08	EF-DAB
27-61-20 04	LC-EP
28-41-10 02	GE-DB
28-41-10 03	GE-DB
28-41-20 03	GK-DB
28-41-30 02	GA-DB
28-41-30 02	GM-DB

PART NUMBER CH-SECT-UNIT-FIG-ITEM	IDENT
M300-1264	
30-10-10 11	DK-DAB
30-10-10 11	DL-DAB
30-10-10 11	EJ-DAB
30-10-10 11	EK-DAB
30-20-10 02	AN-GG
30-20-10 02	AV-GG
30-30-10 02	EE-DAB
30-30-10 02	FG-DAB
30-30-20 02	CQ-ZK
30-30-20 02	CR-ZK
30-30-20 02	CS-ZK
30-30-20 02	CX-ZK
30-30-20 02	FE-DAJ
30-30-20 02	FF-DAJ
30-80-10 02	EE-DAB
30-80-10 03	EE-DAB
31-50-05 03	A-ZJ
32-60-10 04	ED-DAB
32-60-30 02	BP-ZK
32-60-30 02	EE-DAB
32-60-30 03	BP-ZK
32-60-30 03	EE-DAB
33-10-20 04	EC-DAB
33-10-20 07	EC-DAB
33-10-20 08	EC-DAB
33-20-10 10	SV
34-13-01 04	EG-DAB
34-13-01 04	FH-DAB
34-13-01 08	EG-DAB
34-13-01 08	FH-DAB
49-60-10 05	BR-ZK
49-60-10 05	C-ZKA
49-60-10 05	E-ZKA
49-60-10 05	G-ZKA
49-60-10 05	H-ZKA
49-60-30 06	A
49-60-30 06	BE-ZK
49-60-30 06	BR-ZK
49-60-30 06	CP-ZK
49-60-30 06	K2-ZKA
49-60-30 06	K3-ZKA
49-60-30 06	K5-ZKA
49-60-30 06	K6-ZKA
49-60-30 06	K7-ZKA
49-60-30 06	K8-ZKA
49-60-30 08	A
49-60-30 08	BE-ZK
49-60-30 08	CP-ZK
49-60-30 08	K2-ZKA
49-60-30 08	K3-ZKA

PART NUMBER CH-SECT-UNIT-FIG-ITEM	IDENT
M300-1264	
49-60-30 08	K5-ZKA
49-60-30 08	K6-ZKA
49-60-30 08	K7-ZKA
49-60-30 08	K8-ZKA
49-60-30 09	A
49-60-30 09	BE-ZK
49-60-30 09	CP-ZK
49-60-30 09	K2-ZKA
49-60-30 09	K3-ZKA
49-60-30 09	K5-ZKA
49-60-30 09	K6-ZKA
49-60-30 09	K7-ZKA
49-60-30 09	K8-ZKA
49-60-30 11	A
49-60-30 11	BE-ZK
49-60-30 11	CP-ZK
49-60-30 11	K3-ZKA
49-60-30 11	K5-ZKA
49-60-30 11	K6-ZKA
49-60-30 11	K7-ZKA
49-60-30 11	K8-ZKA
73-20-01 05	CL-ZK
73-20-02 05	CM-ZK
73-20-10 03	BF-ZK
73-20-10 03	BH-ZK
73-20-10 03	CA-ZK
73-20-10 03	CB-ZK
73-20-10 03	DJ-DAB
80-10-10 04	BG-ZK
80-10-10 04	BR-ZK
M300-1265	
49-60-10 05	BS-ZK
M301D4F	
24-21-17 03	CM-DAB
24-21-17 03	EL-DAB
24-21-17 03	EM-DAB
24-21-17 04	CM-DAB
24-21-17 04	EL-DAB
24-21-17 04	EM-DAB
M302D4L	
24-30-10 02	KF-DAB
24-30-20 02	KG-DAB
30-10-10 11	CL-DAB
49-60-30 06	K10-ZKA
49-60-30 08	K10-ZKA
49-60-30 09	K10-ZKA
49-60-30 11	K10-ZKA
M3450W10SL4S	
33-40-10 06	NL1-R
M3456W10SL4P	

PART NUMBER CH-SECT-UNIT-FIG-ITEM	IDENT
M3456W10SL4P	
33-40-10 06	NL1-P
M400-1265	
24-21-17 03	CD-ZK
24-21-17 04	CD-ZK
27-33-00 05	GA-DAB
27-33-00 05	GC-DAB
27-33-00 05	GE-DAB
27-33-00 05	GG-DAB
27-33-00 05	GJ-DAB
27-33-00 05	JA-DAB
27-33-00 05	JC-DAB
27-33-00 05	JE-DAB
27-33-00 05	JG-DAB
27-33-00 05	JJ-DAB
27-33-00 07	GA-DAB
27-33-00 07	GC-DAB
27-33-00 07	GE-DAB
27-33-00 07	GG-DAB
27-33-00 07	GJ-DAB
27-33-00 07	JA-DAB
27-33-00 07	JC-DAB
27-33-00 07	JE-DAB
27-33-00 07	JG-DAB
27-33-00 07	JJ-DAB
27-61-10 08	DE-DAB
27-61-20 04	JA-DAB
28-41-10 02	GF-DB
28-41-10 03	GF-DB
28-41-20 03	GF-DB
28-41-20 03	GG-DB
28-41-30 02	GF-DB
30-40-15 07	DG-DAB
30-40-15 10	DG-DAB
30-40-15 11	DG-DAB
30-40-15 12	DG-DAB
31-50-05 03	B-ZJ
31-50-05 03	C-ZJ
31-50-05 03	D-ZJ
32-60-10 04	CD-ZK
33-10-05 05	DA-DAB
33-10-05 05	DC-DAB
33-10-05 05	DE-DAB
33-10-05 07	DA-DAB
33-10-05 07	DC-DAB
33-10-05 07	DE-DAB
33-10-05 08	DA-DAB
33-10-05 08	DC-DAB
33-10-05 08	DE-DAB
33-10-05 09	DA-DAB
33-10-05 09	DC-DAB

PART NUMBER CH-SECT-UNIT-FIG-ITEM	IDENT
M400-1265	
33-10-05 09	DE-DAB
33-10-05 11	DA-DAB
33-10-05 11	DC-DAB
33-10-05 11	DE-DAB
33-10-20 04	DA-DAB
33-10-20 04	DC-DAB
33-10-20 04	DE-DAB
33-10-20 07	DA-DAB
33-10-20 07	DC-DAB
33-10-20 07	DE-DAB
33-10-20 08	DA-DAB
33-10-20 08	DC-DAB
33-10-20 08	DE-DAB
33-30-05 07	ST
49-60-30 06	BS-ZK
49-60-30 06	K1-ZKA
49-60-30 08	BS-ZK
49-60-30 08	K1-ZKA
49-60-30 09	BS-ZK
49-60-30 09	K1-ZKA
49-60-30 11	BS-ZK
49-60-30 11	K1-ZKA
73-20-10 03	DG-DAB
77-10-10 02	AK-GG
77-10-10 02	AL-GG
77-10-10 02	AM-GG
77-20-10 02	AL-GG
77-20-10 02	AM-GG
80-10-10 04	BM-ZK
80-10-10 04	BS-ZK
80-10-10 04	BU-ZK
80-10-10 04	CC-ZK
80-10-10 04	CD-ZK
M401D4F	
24-21-17 03	CJ-DAB
24-21-17 04	CJ-DAB
M402D4A	
27-33-00 05	GL-DAB
27-33-00 05	HA-DAB
27-33-00 05	JL-DAB
27-33-00 07	GL-DAB
27-33-00 07	HA-DAB
27-33-00 07	JL-DAB
M500-1383	
30-40-15 07	FA-DAB
30-40-15 07	FC-DAB
30-40-15 10	FA-DAB
30-40-15 10	FC-DAB
30-40-15 11	FA-DAB
30-40-15 11	FC-DAB

	PART NUMBER CH-SECT-UNIT-FIG-ITEM	IDENT
	M500-1383	
	30-40-15 12	FA-DAB
	30-40-15 12	FC-DAB
	30-40-20 03	CA-DAB
	30-40-20 03	CC-DAB
	30-40-20 03	CE-DAB
	30-40-20 03	CG-DAB
	30-40-20 05	CA-DAB
	30-40-20 05	CC-DAB
	30-40-20 05	CE-DAB
	30-40-20 05	CG-DAB
	M520U5N	
	33-40-20 04	JV
	33-40-20 04	JX
	M520U5NL	
	33-40-20 04	JV
	33-40-20 04	JX
	M81714-2DA1	
R	30-40-15 07	M1-DAG
R	30-40-15 07	M2-DAG
R	30-40-15 07	X12-DAB
R	30-40-15 07	Y1-DAB
R	30-40-15 07	Y14-DAB
R	30-40-15 10	M1-DAG
R	30-40-15 10	M2-DAG
R	30-40-15 10	X12-DAB
R	30-40-15 10	Y1-DAB
R	30-40-15 10	Y14-DAB
R	30-40-15 11	M1-DAG
R	30-40-15 11	M2-DAG
R	30-40-15 11	X12-DAB
R	30-40-15 11	Y1-DAB
R	30-40-15 11	Y14-DAB
R	30-40-15 12	M1-DAG
R	30-40-15 12	M2-DAG
R	30-40-15 12	X12-DAB
R	30-40-15 12	Y1-DAB
R	30-40-15 12	Y14-DAB
R	30-40-20 03	M1-DAG
R	30-40-20 03	M2-DAG
R	30-40-20 03	X12-DAB
R	30-40-20 03	Y1-DAB
R	30-40-20 05	M1-DAG
R	30-40-20 05	M2-DAG
R	30-40-20 05	X12-DAB
R	30-40-20 05	Y1-DAB
R	32-60-10 04	X11-DAB
R	32-60-10 04	X12-DAB
	M81714-2DB1	
R	30-40-15 07	M3-DAG
R	30-40-15 10	M3-DAG

	PART NUMBER CH-SECT-UNIT-FIG-ITEM	IDENT
	M81714-2DB1	
R	30-40-15 11	M3-DAG
R	30-40-15 12	M3-DAG
R	32-60-10 04	X9-DAB
	M83723-13R08-33 * N	
	21-60-10 08	XQ
	21-60-10 08	XR
	21-60-10 10	XQ
	21-60-10 10	XR
	21-60-10 11	XQ
	21-60-10 11	XR
	M83723-83K0803N	
	77-20-10 02	J2-TA4
	77-20-10 02	J2-TB4
	M85049-52-1-10	
	33-40-10 06	NL1-P
	33-40-10 06	NL1-R
	ND0075-1875	
	30-40-15 07	WG
	30-40-15 07	WH
	30-40-15 10	WG
	30-40-15 10	WH
	30-40-15 12	WG
	30-40-15 12	WH
	30-40-20 03	VP
	30-40-20 03	VS
	ND0075-2001	
	30-40-20 03	J-DAG
	30-40-20 03	N-DAG
	30-40-20 05	J-DAG
	30-40-20 05	N-DAG
	ND0075-2011	
	30-40-15 07	K-DAG
	30-40-15 07	L-DAG
	30-40-15 10	K-DAG
	30-40-15 10	L-DAG
	30-40-15 11	K-DAG
	30-40-15 11	L-DAG
	30-40-15 12	K-DAG
	30-40-15 12	L-DAG
	ND0075-2260	
	30-40-15 11	WG
	30-40-15 11	WH
	30-40-15 12	WG
	30-40-15 12	WH
	30-40-20 05	VP
	30-40-20 05	VS
	NF0075-667	
	30-80-10 02	AR
	30-80-10 03	AR

PART NUMBER CH-SECT-UNIT-FIG-ITEM	IDENT
NF24016-151	
30-40-15 07	RE
NF24016-152	
30-40-15 07	RG
NF24016-157	
30-40-15 07	RE
30-40-15 10	RE
30-40-15 11	RE
30-40-15 12	RE
NF24016-158	
30-40-15 07	RG
30-40-15 10	RG
30-40-15 11	RG
30-40-15 12	RG
NH24016-91	
30-40-20 03	RH
30-40-20 05	RH
NH24016-92	
30-40-20 03	RJ
30-40-20 05	RJ
NLW25-50	
21-31-10 07	EC-DAJ
21-31-10 07	ED-DAJ
21-31-10 07	EE-DAJ
PC06E8-2SSR	
26-20-10 03	GH-A-R
26-20-10 03	GH-B-R
26-20-10 03	GJ-A-R
26-20-10 03	GJ-B-R
PC250	
24-21-17 03	TF
24-21-17 04	TF
PTY06CE8-3SSR	
30-20-10 02	LL
30-20-10 02	ML
PT08CE14-19SR	
77-10-10 02	K-CC
77-10-10 02	S-CC
77-10-10 02	T-CC
77-10-10 02	Z-CC
PT08SE12-8SSR	
78-30-05 01	P809
78-30-05 01	P810
78-30-05 02	P809
78-30-05 02	P810
PVWR610-6SNS57	
26-10-20 02	FZ-R
PVW6G12-10SNS03	
28-41-10 03	D-KL
28-41-20 03	KBA
28-41-30 02	JEA

PART NUMBER CH-SECT-UNIT-FIG-ITEM	IDENT
PVW6G12-10SNS03	
28-41-30 02	KEA
PVW6G8-33SNR57	
28-41-20 03	KAA
PVW6G8-363SNR03	
28-41-20 03	KAA
PVW612-10SNS03	
28-41-10 02	D-KL
P067A075-800	
30-10-10 11	DX
P6-24015	
27-61-10 08	JQ
27-61-10 08	KQ
P650	
33-31-10 04	GW
RD328B1B3	
33-10-10 31	R
RELIEF:602GB129 *	
-20-1	
27-61-10 03	CC2-R
RR06E16-99SN059	
49-60-30 06	J5-DE
49-60-30 08	J5-DE
49-60-30 09	J5-DE
49-60-30 11	J5-DE
RR06E16-99SX059	
49-60-30 06	J7-DE
49-60-30 08	J7-DE
49-60-30 09	J7-DE
49-60-30 11	J7-DE
RR06E22-55PN059	
28-41-10 02	JP1-DB-P
28-41-10 03	JP1-DB-P
28-41-20 03	JP1-DB-P
28-41-30 02	JP1-DB-P
RR06E22-55PW059	
28-41-10 02	JP2-DB-P
28-41-10 03	JP2-DB-P
28-41-20 03	JP2-DB-P
28-41-30 02	JP2-DB-P
RSE120074	
21-60-10 08	AJ-DAB
21-60-10 08	BF-DAB
21-60-10 08	BG-DAB
21-60-10 08	BH-DAB
21-60-10 08	BJ-DAB
21-60-10 08	BK-DAB
21-60-10 10	AJ-DAB
21-60-10 10	BF-DAB
21-60-10 10	BG-DAB
21-60-10 10	BH-DAB

PART NUMBER CH-SECT-UNIT-FIG-ITEM	IDENT
RSE120074	
21-60-10 10	BJ-DAB
21-60-10 10	BK-DAB
21-60-10 11	AJ-DAB
21-60-10 11	BF-DAB
21-60-10 11	BG-DAB
21-60-10 11	BH-DAB
21-60-10 11	BJ-DAB
21-60-10 11	BK-DAB
24-30-10 02	AA-DAB
24-30-20 02	AB-DAB
24-30-20 03	AB-DAB
24-50-01 05	AA-DAB
24-50-01 05	AB-DAB
24-50-01 05	AC-DAB
24-50-01 05	BD-DAB
24-50-01 05	BE-DAB
24-50-01 06	AA-DAB
24-50-01 06	AB-DAB
24-50-01 06	AC-DAB
24-50-01 06	BD-DAB
24-50-01 07	AA-DAB
24-50-01 07	AB-DAB
24-50-01 07	AC-DAB
24-50-01 07	BD-DAB
24-50-01 07	BE-DAB
26-10-10 03	AK-DAB
27-61-10 04	AE-DAB
27-61-10 08	AE-DAB
28-41-10 02	BN-DAB
28-41-10 03	BN-DAB
28-41-20 03	GB-DB
28-41-20 03	GB-DB
28-41-20 03	GC-DB
28-41-20 03	GC-DB
28-41-20 03	GD-DB
28-41-20 03	GD-DB
30-40-15 07	BL-DAB
30-40-15 07	BM-DAB
30-40-15 10	BL-DAB
30-40-15 10	BM-DAB
30-40-15 11	BL-DAB
30-40-15 11	BM-DAB
30-40-15 12	BL-DAB
30-40-15 12	BM-DAB
32-60-10 04	AD-DAB
32-60-10 04	AE-DAB
32-60-10 04	AF-DAB
32-60-10 04	AG-DAB
32-60-10 04	AH-DAB
32-60-10 04	AN-DAB

PART NUMBER CH-SECT-UNIT-FIG-ITEM	IDENT
RSE120074	
34-13-01 04	AD-DAB
34-13-01 04	AL-DAB
34-13-01 04	AM-DAB
34-13-01 08	AD-DAB
34-13-01 08	AL-DAB
34-13-01 08	AM-DAB
49-60-10 05	N-GA
49-60-10 05	P-GA
73-20-01 05	BC-ZK
73-20-02 05	BD-ZK
SA2025	
33-10-05 05	JA-DA-P
33-10-05 07	JA-DA-P
33-10-05 08	JA-DA-P
33-10-05 09	JA-DA-P
33-10-05 11	JA-DA-P
SA2026	
33-10-05 05	JA-DA-R
33-10-05 07	JA-DA-R
33-10-05 08	JA-DA-R
33-10-05 09	JA-DA-R
33-10-05 11	JA-DA-R
SB24-285-253273 * A	
24-50-01 05	
24-50-01 07	
30-30-20 02	
30-40-15 07	
30-40-15 10	
SB24-286-253272 * A	
24-50-01 06	
24-50-01 07	
30-30-20 02	
SB24-289-253267	
24-30-20 02	
24-30-20 03	
SB24-316-7671C	
24-30-10 02	LA
SB26-3002-25F59 * 8A	
49-60-30 06	
49-60-30 08	
SB27-162-253552 * A	
27-61-10 08	
SB30-052-253261 * B	
30-40-15 07	
30-40-15 10	

PART NUMBER CH-SECT-UNIT-FIG-ITEM	IDENT
SB31-60-9258B	
28-40-10 05	
SB49-037-25A253 * A	
49-60-30 09	
SB49-37-25A253A	
49-60-10 05	
49-60-30 06	
49-60-30 08	
SCA11108-02	
33-10-05 08	L1
33-10-05 08	L13
33-10-05 09	L1
33-10-05 09	L13
33-10-05 11	L1
33-10-05 11	L13
33-10-20 07	P1-CC-R
33-10-20 07	P6-CC-R
33-10-20 08	P1-CC-R
33-10-20 08	P6-CC-R
SD853JF	
30-30-31 02	PM
30-30-31 02	PN
SPARE	
24-50-05 08	B105-DAD
24-50-05 08	B109-DAD
24-50-05 08	B126-DAD
24-50-05 08	B127-DAD
24-50-05 08	B128-DAD
24-50-05 08	B129-DAD
24-50-05 08	B130-DAD
24-50-05 08	B32-DAD
24-50-05 08	B4-GA
24-50-05 08	B65-DAD
24-50-05 08	B70-DAD
24-50-05 08	B75-DAD
24-50-05 08	B79-DAD
24-50-05 08	B80-DAD
24-50-05 08	B84-DAD
24-50-05 08	B95-DAD
24-50-05 08	CB1-ZKA
24-50-05 08	CB2-ZKA
24-50-05 08	F1-XZ
24-50-05 08	F1-ZKA
24-50-05 08	F10-ZKA
24-50-05 08	F11-ZK
24-50-05 08	F12-ZK
24-50-05 08	F2-GA
24-50-05 08	F2-XZ
24-50-05 08	F2-ZKA
24-50-05 08	F20-ZK

PART NUMBER CH-SECT-UNIT-FIG-ITEM	IDENT
SPARE	
24-50-05 08	F21-ZK
24-50-05 08	F21-ZL
24-50-05 08	F22-ZL
24-50-05 08	F23-ZK
24-50-05 08	F23-ZL
24-50-05 08	F24-ZK
24-50-05 08	F25-ZK
24-50-05 08	F26-ZK
24-50-05 08	F27-ZK
24-50-05 08	F28-ZK
24-50-05 08	F28-ZKA
24-50-05 08	F29-ZK
24-50-05 08	F3-GA
24-50-05 08	F3-XZ
24-50-05 08	F3-ZK
24-50-05 08	F3-ZKA
24-50-05 08	F31-GA
24-50-05 08	F4-GA
24-50-05 08	F4-GG
24-50-05 08	F4-XZ
24-50-05 08	F4-ZK
24-50-05 08	F4-ZKA
24-50-05 08	F43-ZK
24-50-05 08	F44-ZK
24-50-05 08	F45-ZK
24-50-05 08	F5-GG
24-50-05 08	F5-ZK
24-50-05 08	F5-ZKA
24-50-05 08	F6-GG
24-50-05 08	F6-ZKA
24-50-05 08	F67-ZK
24-50-05 08	F7-GG
24-50-05 08	F7-ZKA
24-50-05 08	F8-ZKA
24-50-05 08	F9-ZK
24-50-05 08	F9-ZKA
24-50-05 11	B105-DAD
24-50-05 11	B126-DAD
24-50-05 11	B32-DAD
24-50-05 11	B65-DAD
24-50-05 11	B70-DAD
24-50-05 11	B75-DAD
24-50-05 11	B79-DAD
24-50-05 11	B80-DAD
24-50-05 11	B84-DAD
24-50-05 11	B95-DAD
24-50-05 11	F11-ZK
24-50-05 11	F12-ZK
24-50-05 11	F2-GA
24-50-05 11	F20-ZK

PART NUMBER CH-SECT-UNIT-FIG-ITEM	IDENT
SPARE	
24-50-05 11	F21-ZL
24-50-05 11	F22-ZL
24-50-05 11	F23-ZK
24-50-05 11	F23-ZL
24-50-05 11	F24-ZK
24-50-05 11	F25-ZK
24-50-05 11	F26-ZK
24-50-05 11	F28-ZK
24-50-05 11	F3-ZK
24-50-05 11	F31-GA
24-50-05 11	F4-GG
24-50-05 11	F4-ZK
24-50-05 11	F43-ZK
24-50-05 11	F44-ZK
24-50-05 11	F45-ZK
24-50-05 11	F49-ZK
24-50-05 11	F5-GG
24-50-05 11	F5-ZK
24-50-05 11	F6-GG
24-50-05 11	F6-ZKA
24-50-05 11	F7-GG
24-50-05 11	F7-ZKA
24-50-05 11	F9-ZK
24-50-05 14	B105-DAD
24-50-05 14	B126-DAD
24-50-05 14	B32-DAD
24-50-05 14	B65-DAD
24-50-05 14	B70-DAD
24-50-05 14	B75-DAD
24-50-05 14	B79-DAD
24-50-05 14	B80-DAD
24-50-05 14	B84-DAD
24-50-05 14	B95-DAD
24-50-05 14	F1-DAC
24-50-05 14	F11-ZK
24-50-05 14	F12-ZK
24-50-05 14	F2-GA
24-50-05 14	F20-ZK
24-50-05 14	F21-ZL
24-50-05 14	F22-ZL
24-50-05 14	F23-ZK
24-50-05 14	F23-ZL
24-50-05 14	F24-ZK
24-50-05 14	F25-ZK
24-50-05 14	F26-ZK
24-50-05 14	F27-ZK
24-50-05 14	F28-ZK
24-50-05 14	F3-ZK
24-50-05 14	F31-GA
24-50-05 14	F4-GG

PART NUMBER CH-SECT-UNIT-FIG-ITEM	IDENT
SPARE	
24-50-05 14	F4-ZK
24-50-05 14	F43-ZK
24-50-05 14	F44-ZK
24-50-05 14	F45-ZK
24-50-05 14	F49-ZK
24-50-05 14	F5-GG
24-50-05 14	F5-ZK
24-50-05 14	F6-GG
24-50-05 14	F6-ZKA
24-50-05 14	F7-GG
24-50-05 14	F7-ZKA
24-50-05 14	F9-ZK
24-50-05 15	B105-DAD
24-50-05 15	B126-DAD
24-50-05 15	B32-DAD
24-50-05 15	B65-DAD
24-50-05 15	B70-DAD
24-50-05 15	B75-DAD
24-50-05 15	B79-DAD
24-50-05 15	B80-DAD
24-50-05 15	B84-DAD
24-50-05 15	B95-DAD
24-50-05 15	F11-ZK
24-50-05 15	F12-ZK
24-50-05 15	F18-ZL
24-50-05 15	F19-ZL
24-50-05 15	F2-GA
24-50-05 15	F20-ZK
24-50-05 15	F20-ZL
24-50-05 15	F21-ZL
24-50-05 15	F22-ZL
24-50-05 15	F23-ZK
24-50-05 15	F23-ZL
24-50-05 15	F24-ZK
24-50-05 15	F25-ZK
24-50-05 15	F26-ZK
24-50-05 15	F27-ZK
24-50-05 15	F28-ZK
24-50-05 15	F3-ZK
24-50-05 15	F31-GA
24-50-05 15	F4-GG
24-50-05 15	F4-ZK
24-50-05 15	F43-ZK
24-50-05 15	F44-ZK
24-50-05 15	F45-ZK
24-50-05 15	F49-ZK
24-50-05 15	F5-GG
24-50-05 15	F5-ZK
24-50-05 15	F6-GG
24-50-05 15	F6-ZKA

PART NUMBER CH-SECT-UNIT-FIG-ITEM	IDENT
SPARE	
24-50-05 15	F7-GG
24-50-05 15	F7-ZKA
24-50-05 15	F9-ZK
SW06HHN400SUU90 * 96	
24-50-01 05	A-ZL
24-50-01 05	C-ZL
24-50-01 05	D-ZL
24-50-01 05	E-ZL
24-50-01 06	A-ZL
24-50-01 06	C-ZL
24-50-01 06	D-ZL
24-50-01 06	E-ZL
24-50-01 07	A-ZL
24-50-01 07	C-ZL
24-50-01 07	D-ZL
24-50-01 07	E-ZL
S0-1048-8308	
28-41-10 02	GF-DB
28-41-10 03	GF-DB
S0-1049-8309	
28-41-10 02	GE-DB
28-41-10 03	GE-DB
49-60-10 05	C-ZKA
49-60-10 05	E-ZKA
49-60-10 05	G-ZKA
49-60-10 05	H-ZKA
S00A1B0	
30-10-10 11	DK-DAB
30-10-10 11	DL-DAB
30-10-10 11	EJ-DAB
30-10-10 11	EK-DAB
S01048-8308	
28-41-30 02	GF-DB
S01049-8309	
28-41-30 02	GA-DB
28-41-30 02	GM-DB
S110G4-203	
31-20-35 02	TH
31-20-35 03	TH
S110G50-1957	
21-60-20 02	QA
21-60-20 02	YH
21-60-20 03	QA
21-60-20 03	YH
S110G61-978	
31-20-35 02	AK
31-20-35 03	AK
S132-3-22	
27-50-10 02	JB

PART NUMBER CH-SECT-UNIT-FIG-ITEM	IDENT
S300-1AB0	
24-30-20 02	EB-DAB
24-30-20 03	EB-DAB
S300A1A2	
33-30-15 07	DM-DAB
S300B1B0	
24-21-17 03	CM-DAB
24-21-17 03	EL-DAB
24-21-17 03	EM-DAB
24-21-17 04	CM-DAB
24-21-17 04	EL-DAB
24-21-17 04	EM-DAB
S302D1B0	
24-30-10 02	KF-DAB
30-10-10 11	CL-DAB
49-60-30 06	K10-ZKA
49-60-30 08	K10-ZKA
49-60-30 09	K10-ZKA
49-60-30 11	K10-ZKA
S302D1B3	
24-30-20 02	KG-DAB
S3502-218	
30-20-10 02	AW-GG
30-20-10 02	AX-GG
S458-5-191	
30-10-10 11	PV-CG
S546-3-50	
49-60-10 05	S-DE
S6GN55	
24-50-05 08	A-D-XZ
24-50-05 08	B-D-XZ
24-50-05 08	D-XZ
24-50-05 11	A-D-XZ
24-50-05 11	B-D-XZ
24-50-05 11	D-XZ
24-50-05 14	A-D-XZ
24-50-05 14	B-D-XZ
24-50-05 14	D-XZ
24-50-05 15	A-D-XZ
24-50-05 15	B-D-XZ
24-50-05 15	D-XZ
TDA310	
30-20-10 02	AU-GG
79-30-10 02	AS-GG
TDA310A	
30-20-10 02	AU-GG
TD240-60S	
30-80-10 02	AQ-DAC
TF57160-1	
28-21-05 02	JJ
28-21-05 02	KJ

PART NUMBER CH-SECT-UNIT-FIG-ITEM	IDENT
TF57160-1	
28-21-05 03	JJ
28-21-05 03	KJ
28-21-05 04	JJ
28-21-05 04	KJ
TJ12E02-02	
27-30-10 07	B-CAPT
27-30-10 07	B-FO
27-30-10 08	B-CAPT
27-30-10 08	B-FO
TP42000	
31-20-60 02	AT
31-20-60 02	AV
TP42001	
31-20-60 02	GX
TR5-680R	
30-40-15 07	F-DAB
30-40-15 07	G-DAB
30-40-15 10	F-DAB
30-40-15 10	G-DAB
30-40-15 11	F-DAB
30-40-15 11	G-DAB
30-40-15 12	F-DAB
30-40-15 12	G-DAB
30-40-20 03	D-DAB
30-40-20 05	D-DAB
30-40-20 05	E-DAB
33-10-20 04	AN
33-10-20 04	AP
33-10-20 07	AN
33-10-20 07	AP
33-10-20 08	AN
33-10-20 08	AP
UAM100	
24-50-01 05	F13-GA
24-50-01 05	F14-GA
24-50-01 05	F23-GA
24-50-01 05	F24-GA
24-50-01 05	F31-ZL
24-50-01 05	F32-ZL
24-50-01 06	F13-GA
24-50-01 06	F14-GA
24-50-01 06	F23-GA
24-50-01 06	F24-GA
24-50-01 06	F31-ZL
24-50-01 06	F32-ZL
24-50-01 07	F13-GA
24-50-01 07	F14-GA
24-50-01 07	F23-GA
24-50-01 07	F24-GA
24-50-01 07	F31-ZL

PART NUMBER CH-SECT-UNIT-FIG-ITEM	IDENT
UAM100	
24-50-01 07	F32-ZL
24-50-05 08	F13-GA
24-50-05 08	F14-GA
24-50-05 08	F23-GA
24-50-05 08	F24-GA
24-50-05 08	F31-ZL
24-50-05 08	F32-ZL
24-50-05 11	F13-GA
24-50-05 11	F14-GA
24-50-05 11	F23-GA
24-50-05 11	F24-GA
24-50-05 11	F31-ZL
24-50-05 11	F32-ZL
24-50-05 14	F13-GA
24-50-05 14	F14-GA
24-50-05 14	F23-GA
24-50-05 14	F24-GA
24-50-05 14	F31-ZL
24-50-05 14	F32-ZL
24-50-05 15	F13-GA
24-50-05 15	F14-GA
24-50-05 15	F23-GA
24-50-05 15	F24-GA
24-50-05 15	F31-ZL
24-50-05 15	F32-ZL
UNASSIGNED	
21-60-10 08	EB
21-60-10 10	EB
21-60-10 11	EB
U3626	
24-50-01 05	JG-DAH
24-50-01 06	JG-DAH
24-50-01 07	JG-DAH
WBUN1193SS5B	
21-60-10 08	HA-DAH
21-60-10 10	HA-DAH
21-60-10 11	HA-DAH
21-60-10 11	HA-X
WBUN1502	
24-21-17 04	E-XZ
49-60-10 05	L-ZKA
49-60-10 05	P-ZKA
49-60-10 05	X-GA
49-60-10 05	Z-ZK
WBUN1736D10B	
33-10-05 05	CF
33-10-05 07	CF
33-10-05 08	CF
33-10-05 09	CF
33-10-05 11	CF

PART NUMBER CH-SECT-UNIT-FIG-ITEM	IDENT
WC1503	
21-31-10 07	FT-CG
24-50-01 05	LN-CG
24-50-01 05	LP-CG
24-50-01 06	LN-CG
24-50-01 06	LP-CG
24-50-01 07	LN-CG
24-50-01 07	LP-CG
26-10-10 03	DT-CG
26-10-10 03	DU-CG
26-10-20 02	DV-CG
26-10-30 03	DW-CG
27-33-00 05	ET-CG
27-33-00 05	EU-CG
27-33-00 05	EV-CG
27-33-00 05	G-DR
27-33-00 05	J-DR
27-33-00 07	ET-CG
27-33-00 07	EU-CG
27-33-00 07	EV-CG
27-33-00 07	G-DR
27-33-00 07	J-DR
27-61-20 04	EZ-CG
30-30-20 02	C-DR
30-30-20 02	F-DR
30-80-10 02	FU-CG
30-80-10 03	FU-CG
31-50-05 03	E-WX
31-50-05 03	F-WX
34-13-01 04	EW-CG
34-13-01 04	EX-CG
34-13-01 04	FV-CG
34-13-01 04	FW-CG
34-13-01 04	FY-CG
34-13-01 04	FZ-CG
34-13-01 08	FV-CG
34-13-01 08	FW-CG
34-13-01 08	FY-CG
34-13-01 08	FZ-CG
49-60-30 06	S1-ZKA
49-60-30 08	S1-ZKA
49-60-30 09	S1-ZKA
49-60-30 11	S1-ZKA
WL1901KID1	
28-40-10 04	J-CC
28-40-10 04	L-CC
WL1903KID01	
28-40-10 05	J-CC
28-40-10 05	L-CC
WL656RSA	
77-10-10 02	K-CC

PART NUMBER CH-SECT-UNIT-FIG-ITEM	IDENT
WL656RSA	
77-10-10 02	Z-CC
WL717RSA	
77-10-10 02	S-CC
77-10-10 02	T-CC
WL718RSA3	
77-20-10 02	V-CC
77-20-10 02	W-CC
W21-1R5	
31-20-35 02	RH-DAJ
31-20-35 03	RH-DAJ
W21R56	
31-20-35 02	RJ-DAJ
31-20-35 03	RJ-DAJ
W22-2RPM5PCT	
34-13-01 04	MG-DAC
34-13-01 04	ML-DAC
34-13-01 08	MG-DAC
34-13-01 08	ML-DAC
W22-4R7	
33-10-05 05	L-AB
33-10-05 07	L-AB
XC5732	
27-24-10 02	TK
27-24-10 02	TL
27-24-10 03	TK
27-24-10 03	TL

PART NUMBER INDEX

(NUMERIC)

PART NUMBER CH-SECT-UNIT-FIG-ITEM	IDENT
01-0790044-55	
33-40-10 06	HA
01-0923	
26-10-10 03	BG-BA
26-10-10 03	BH-BA
0107KLM1	
28-40-10 04	JZ-R
28-40-10 04	KZ-R
28-40-10 05	JZ-R
28-40-10 05	KZ-R
0107KPU1	
28-40-10 04	D-PQ
28-40-10 05	D-PQ
02-1117	
33-30-05 07	FFA
33-30-05 07	FFB
33-30-05 07	FFC
33-30-05 07	FFD
33-30-05 07	FFE
33-30-05 07	FFF
0204KTU2	
28-40-10 04	2-LH
28-40-10 04	2-RH
28-40-10 05	2-LH
28-40-10 05	2-RH
0204KTU4	
28-40-10 04	4-LH
28-40-10 04	4-RH
28-40-10 05	4-LH
28-40-10 05	4-RH
0204KTU5	
28-40-10 04	5-LH
28-40-10 04	5-RH
28-40-10 05	5-LH
28-40-10 05	5-RH
0204KTU6	
28-40-10 04	6-LH
28-40-10 04	6-RH
28-40-10 05	6-LH
28-40-10 05	6-RH
0204KTU7	
28-40-10 04	7-LH
28-40-10 04	7-RH
28-40-10 05	7-LH
28-40-10 05	7-RH
0207KTU1	
28-40-10 04	1-LH
28-40-10 04	1-RH
28-40-10 05	1-LH
28-40-10 05	1-RH
0207KTU3	

PART NUMBER CH-SECT-UNIT-FIG-ITEM	IDENT
0207KTU3	
28-40-10 04	3-LH
28-40-10 04	3-RH
28-40-10 05	3-LH
28-40-10 05	3-RH
03-0033	
33-30-05 07	FB
33-30-05 08	FB
057-0683-002	
31-50-05 03	UH
1-480704-0	
33-40-10 06	NL2-P
1-480705-0	
33-40-10 06	NL2-R
1EN1-14N119	
32-60-10 04	NC
32-60-30 02	JP
32-60-30 03	JP
73-20-10 03	KP
78-30-05 01	KP
78-30-05 02	KP
1EN1-15BN111	
32-60-10 04	NA
1EN1-8N119	
32-60-10 04	JN
32-60-10 04	KN
34-13-01 04	KN
34-13-01 08	KN
1HM1	
31-50-05 03	B-UC
31-50-05 03	D-UC
1HSN64	
28-41-10 02	BB-BA
28-41-10 03	BB-BA
32-60-10 04	RQ-BA
32-60-10 04	XS
32-60-10 04	XT
32-60-10 04	ZU
32-60-10 04	ZY
80-10-10 04	RR-BA
1HSN66	
28-42-10 02	WC-BA
1N4005	
28-41-10 02	S-JA
28-41-10 03	S-JA
28-41-20 03	R-JA
31-50-05 03	L-ZJ
31-50-05 03	M-ZJ
31-50-05 03	N-ZJ
31-50-05 03	P-ZJ
31-50-05 03	R-ZJ

PART NUMBER CH-SECT-UNIT-FIG-ITEM	IDENT
1N4005	
31-50-05 03	S-ZJ
33-40-15 02	C-AP
33-40-15 02	D-AP
49-60-30 09	B
49-60-30 09	BB-ZK
49-60-30 11	B
49-60-30 11	BB-ZK
77-10-10 02	E-GG
77-10-10 02	S-GG
1N5350B	
33-10-05 05	BL-CG
33-10-05 07	BL-CG
33-10-05 08	BL-CG
33-10-05 09	BL-CG
33-10-05 11	BL-CG
1PD1862-68NS	
33-10-05 09	CH
33-10-05 09	CJ
1SX1T	
27-30-10 07	BM-BA
27-61-20 04	BM-BA
1TP1-1	
24-50-01 05	ES-CG
24-50-01 06	ES-CG
24-50-01 07	ES-CG
1TP1-1M	
24-50-01 06	ES-CG
24-50-01 07	ES-CG
1TP1-3	
21-20-10 03	NL-CG
21-20-10 03	NM-CG
21-30-10 02	NN-CG
21-30-10 04	NN-CG
30-40-15 07	EA-CG
30-40-15 07	EC-CG
33-10-05 05	WK
33-10-05 07	WK
33-10-05 08	WK
33-10-05 09	WK
33-10-05 11	WK
33-30-05 07	JD-DA
33-30-05 08	JD-DA
33-40-10 05	CA-CG
33-40-10 05	CB-CG
33-40-10 05	CD-CG
33-40-30 03	CE-CG
1TP1-3M	
21-20-10 03	NL-CG
21-20-10 03	NM-CG
21-30-10 02	NN-CG

PART NUMBER CH-SECT-UNIT-FIG-ITEM	IDENT
1TP1-3M	
21-30-10 04	NN-CG
30-40-15 07	EA-CG
30-40-15 07	EC-CG
30-40-15 10	EA-CG
30-40-15 10	EC-CG
30-40-15 11	EA-CG
30-40-15 11	EC-CG
30-40-15 12	EA-CG
30-40-15 12	EC-CG
33-30-05 07	JD-DA
33-30-05 08	JD-DA
33-40-10 05	CA-CG
33-40-10 05	CB-CG
33-40-10 05	CD-CG
33-40-10 06	CA-CG
33-40-10 06	CB-CG
33-40-10 06	CD-CG
33-40-30 03	CE-CG
1TP1-31	
24-21-17 03	LW-CG
1TP1-31M	
24-21-17 03	LW-CG
24-21-17 04	LW-CG
1TP1-5	
21-60-10 08	NU-CG
21-60-10 10	NU-CG
21-60-10 11	NU-CG
1TP1-5M	
21-60-10 10	NU-CG
21-60-10 11	NU-CG
1TP4-3	
33-30-05 07	DM
33-30-05 08	DM
1014-3PGCP16	
49-60-10 05	E-TQ
10201	
27-33-00 05	RB
10201-1	
27-33-00 05	RB
27-33-00 07	RB
104026-1	
49-60-30 06	TB301-1-4
49-60-30 08	TB301-1-4
49-60-30 09	M2
49-60-30 11	TB301-1-4
104568-3	
21-60-10 08	QH
21-60-10 10	QH
21-60-10 11	QH
104829001	

	PART NUMBER CH-SECT-UNIT-FIG-ITEM	IDENT
	104829001	
	27-33-00 05	GP-A
	27-33-00 05	GP-B
	27-33-00 07	GP-A
	27-33-00 07	GP-B
	104968	
	21-60-10 08	QG
	21-60-10 10	QG
	21-60-10 11	QG
	11TNC75-4-2C	
	23-31-10 58	P630
	23-31-10 65	P630
	1103KSDBU2	
	21-31-10 07	AA-DAE
	1104	
	21-30-10 04	DA29-R
	12-271	
	31-50-05 03	E-UC
	31-50-05 03	H-UC
	125REF000000060	
	33-10-10 31	CD2-P
	125REF000000061	
	33-30-05 07	JP2-DA-P
	33-30-05 08	JP2-DA-P
	125REF000000425	
	26-10-20 02	FZ-R
	130530-4	
	33-10-10 31	AG-CD
	1322ZMK3	
	27-61-10 03	JQ
	27-61-10 03	KQ
	27-61-10 04	JQ
	27-61-10 04	KQ
	132322-2-1	
	21-30-10 02	YL
	21-30-10 04	YL
	132322-3-1	
	21-30-10 04	YL
	140-380026-1	
R	24-30-10 02	LA
R	24-30-10 02	LA
R	24-30-20 02	MA
R	24-30-20 02	MA
R	24-30-20 03	MA
R	24-30-20 03	MA
R	49-60-10 05	K-TQ
R	49-60-10 05	K-TQ
	140-4537	
	31-50-01 04	Q-CC
	31-50-01 07	Q-CC
	31-50-01 08	Q-CC

PART NUMBER CH-SECT-UNIT-FIG-ITEM	IDENT
140-4537	
31-50-01 09	Q-CC
33-10-05 05	BM-CG
33-10-05 07	BM-CG
33-10-20 04	A
33-10-20 04	C
33-10-20 04	D
33-10-20 04	E
33-10-20 04	U
33-10-20 07	A
33-10-20 07	C
33-10-20 08	A
33-10-20 08	C
140-4537-01	
31-50-01 14	AP-CD
140-4538	
33-10-05 05	BH-CG
33-10-05 05	C
33-10-05 05	S
33-10-05 05	T
33-10-05 05	V
33-10-05 05	X
33-10-05 07	BH-CG
33-10-05 07	C
33-10-05 07	S
33-10-05 07	T
33-10-05 07	V
33-10-05 07	X
33-10-05 08	BH-CG
33-10-05 08	C
33-10-05 08	S
33-10-05 08	T
33-10-05 08	V
33-10-05 08	X
33-10-05 09	BH-CG
33-10-05 09	BM-CG
33-10-05 09	C
33-10-05 09	S
33-10-05 09	T
33-10-05 09	V
33-10-05 09	X
33-10-05 11	BH-CG
33-10-05 11	BM-CG
33-10-05 11	S
33-10-05 11	T
33-10-05 11	V
33-10-05 11	X
33-10-20 04	G
33-10-20 04	H
33-10-20 07	G
33-10-20 07	H

PART NUMBER CH-SECT-UNIT-FIG-ITEM	IDENT
140-4538	
33-10-20 08	D
33-10-20 08	E
33-10-20 08	G
33-10-20 08	H
33-10-20 08	U
150D01-100-2	
26-10-30 03	QR
26-10-30 03	QS
26-10-30 03	QT
26-10-30 03	QU
26-10-30 03	QV
26-10-30 03	QW
150T283	
29-32-10 05	QM
151606001	
27-33-00 05	GP-A
27-33-00 05	GP-B
27-33-00 07	GP-A
27-33-00 07	GP-B
156D05-315	
26-10-30 03	UM
26-10-30 03	UP
160021-3	
49-60-30 06	TC1
49-60-30 06	TC2
49-60-30 08	TC1
49-60-30 08	TC2
49-60-30 09	TC1
49-60-30 09	TC2
49-60-30 11	TC1
49-60-30 11	TC2
160240-400	
49-60-30 06	Z5
49-60-30 08	Z5
49-60-30 09	Z5
49-60-30 11	Z5
160290-100	
49-60-30 06	Z4
49-60-30 08	Z4
49-60-30 09	Z4
49-60-30 11	Z4
161043-700	
49-60-30 06	Z1
49-60-30 08	Z1
49-60-30 09	Z1
161043-701	
49-60-30 06	Z1
49-60-30 08	Z1
49-60-30 09	Z1
1626	

PART NUMBER CH-SECT-UNIT-FIG-ITEM	IDENT
1626	
24-30-10 02	M-GA
24-30-20 02	L-GA
24-30-20 03	L-GA
1628	
24-50-01 05	G-ZL
24-50-01 05	H-ZL
24-50-01 06	G-ZL
24-50-01 06	H-ZL
24-50-01 07	G-ZL
24-50-01 07	H-ZL
49-60-30 06	H-ZL
49-60-30 08	H-ZL
49-60-30 09	H-ZL
164540-700	
49-60-30 11	Z1
169096-1	
49-60-30 06	M1
49-60-30 08	M1
49-60-30 09	M1
49-60-30 11	M1
17-5C	
34-30-10 53	E217
1703-12	
27-33-00 05	CS
27-33-00 05	CU
27-33-00 07	CS-LH
27-33-00 07	CS-RH
30-30-20 02	CS
30-30-20 02	CU
17343-62-500	
49-60-30 06	S12
49-60-30 06	S20
49-60-30 06	S21
49-60-30 08	S12
49-60-30 08	S20
49-60-30 08	S21
49-60-30 09	S12
49-60-30 09	S20
49-60-30 09	S21
49-60-30 11	S12
49-60-30 11	S20
49-60-30 11	S21
18C2	
33-50-10 09	NH
18046D	
33-10-05 05	JA-DA
33-10-05 07	JA-DA
33-10-05 08	JA-DA
33-10-05 09	JA-DA
33-10-05 11	JA-DA

PART NUMBER CH-SECT-UNIT-FIG-ITEM	IDENT
1841-1-5620	
27-30-10 07	B3-CAPT
27-30-10 07	B3-FO
27-30-10 07	B4-CAPT
27-30-10 07	B4-FO
27-30-10 07	B5-CAPT
27-30-10 07	B5-FO
27-30-10 07	B6-CAPT
27-30-10 07	B6-FO
27-30-10 07	B7-CAPT
27-30-10 07	B7-FO
27-30-10 07	B8-CAPT
27-30-10 07	B8-FO
27-30-10 08	B3-CAPT
27-30-10 08	B3-FO
27-30-10 08	B4-CAPT
27-30-10 08	B4-FO
27-30-10 08	B5-CAPT
27-30-10 08	B5-FO
27-30-10 08	B6-CAPT
27-30-10 08	B6-FO
27-30-10 08	B7-CAPT
27-30-10 08	B7-FO
27-30-10 08	B8-CAPT
27-30-10 08	B8-FO
19-127-55	
28-40-30 05	1926-M1
28-40-30 05	1926-M2
2-329444-1	
34-30-10 53	P212
2-329452-1	
34-30-10 53	J212
2B6-72	
49-60-30 06	B1
49-60-30 08	B1
49-60-30 09	B1
49-60-30 11	B1
2C40-2	
28-21-05 02	105-LH
28-21-05 02	105-RH
28-21-05 03	105-LH
28-21-05 03	105-RH
28-21-05 04	105-LH
28-21-05 04	105-RH
2D1	
31-20-35 02	WJ
31-20-35 03	WJ
2D2	
33-10-20 04	M-CA
33-10-20 07	M-CA
33-10-20 08	M-CA

PART NUMBER CH-SECT-UNIT-FIG-ITEM	IDENT
2D33	
80-10-10 04	ER-CG
2D70	
31-50-01 04	A-CC
31-50-01 07	A-CC
31-50-01 08	A-CC
31-50-01 09	A-CC
31-50-01 14	AM-CD
2D72	
80-10-10 04	FR-CG
80-10-10 04	FS-CG
2HM19-1	
32-60-10 04	PS
2PB717T2	
49-60-30 06	S5-DE
49-60-30 08	S5-DE
49-60-30 09	S5-DE
49-60-30 11	S5-DE
2PB732T2	
49-60-30 06	S2-DE
49-60-30 06	S4-DE
49-60-30 06	S8-DE
49-60-30 08	S2-DE
49-60-30 08	S4-DE
49-60-30 08	S8-DE
49-60-30 09	S2-DE
49-60-30 09	S4-DE
49-60-30 09	S8-DE
49-60-30 11	S2-DE
49-60-30 11	S4-DE
49-60-30 11	S8-DE
2TL1-3	
27-24-10 02	WN-CB-BA
27-24-10 02	WU-CB-BA
27-24-10 03	WN-CB
27-24-10 03	WU-CB
2TL1-51	
49-60-10 05	D-DE
2TL1-7	
30-40-15 07	F-DAB
30-40-15 07	G-DAB
30-40-15 10	F-DAB
30-40-15 10	G-DAB
30-40-15 11	F-DAB
30-40-15 11	G-DAB
30-40-15 12	F-DAB
30-40-15 12	G-DAB
30-40-20 03	D-DAB
30-40-20 03	E-DAB
30-40-20 05	D-DAB
30-40-20 05	E-DAB

PART NUMBER CH-SECT-UNIT-FIG-ITEM	IDENT
2TL7	
49-60-10 05	M-DE
2TP1-1	
28-21-05 02	LF-CG
28-21-05 02	LG-CG
28-21-05 04	LF-CG
28-21-05 04	LG-CG
28-41-10 02	DE-DB
28-41-10 03	DE-DB
30-20-10 02	NF-CG
30-20-10 02	NG-CG
33-10-05 05	JB-DA
33-10-05 07	JB-DA
33-40-15 02	RT-CG
33-40-15 02	RU-CG
33-40-20 04	RT-CG
33-40-20 04	RU-CG
73-20-01 05	NF-CG
73-20-02 05	NG-CG
2TP1-1M	
28-21-05 02	LF-CG
28-21-05 02	LG-CG
28-21-05 03	LF-CG
28-21-05 03	LG-CG
28-41-10 02	DE-DB
28-41-10 03	DE-DB
30-20-10 02	NF-CG
30-20-10 02	NG-CG
33-10-05 07	JB-DA
33-10-05 08	JB-DA
33-10-05 09	JB-DA
33-10-05 11	JB-DA
33-40-15 02	RT-CG
33-40-15 02	RU-CG
33-40-20 04	RT-CG
33-40-20 04	RU-CG
73-20-01 05	NF-CG
73-20-10 03	NF-CG
73-20-10 03	NG-CG
2TP1-10	
21-20-10 03	AD-CC
21-60-10 08	NW-CG
21-60-10 08	NX-CG
21-60-10 10	NW-CG
21-60-10 10	NX-CG
21-60-10 11	NW-CG
21-60-10 11	NX-CG
73-20-02 05	NH-CG
2TP1-10M	
21-20-10 03	AD-CC
21-60-10 10	NW-CG

PART NUMBER CH-SECT-UNIT-FIG-ITEM	IDENT
2TP1-10M	
21-60-10 10	NX-CG
21-60-10 11	NW-CG
21-60-10 11	NX-CG
33-20-10 10	CU-CG
2TP1-3	
24-50-01 05	EK-CG
24-50-01 05	EL-CG
24-50-01 06	EK-CG
24-50-01 06	EL-CG
24-50-01 07	EK-CG
24-50-01 07	EL-CG
27-24-10 02	EE-CG
27-24-10 02	EF-CG
28-41-20 03	DC-DB
28-41-30 02	DG-DB
28-41-30 02	DH-DB
30-20-10 02	NA-CG
30-20-10 02	NB-CG
30-30-20 02	EE-CG
30-30-20 02	EF-CG
30-30-31 02	EE-CG
30-30-31 02	EF-CG
30-40-15 07	EB-CG
30-40-15 07	ED-CG
30-40-20 03	EB-CG
30-40-20 03	ED-CG
33-50-10 09	CS-CG
80-10-10 04	NC-CG
80-10-10 04	ND-CG
2TP1-3M	
24-50-01 06	EK-CG
24-50-01 06	EL-CG
24-50-01 07	EK-CG
24-50-01 07	EL-CG
27-24-10 02	EE-CG
27-24-10 02	EF-CG
27-24-10 03	EE-CG
27-24-10 03	EF-CG
28-41-20 03	DC-DB
30-20-10 02	NA-CG
30-20-10 02	NB-CG
30-30-20 02	EE-CG
30-30-20 02	EF-CG
30-40-15 07	EB-CG
30-40-15 07	ED-CG
30-40-15 10	EB-CG
30-40-15 10	ED-CG
30-40-15 11	EB-CG
30-40-15 11	ED-CG
30-40-15 12	EB-CG

PART NUMBER CH-SECT-UNIT-FIG-ITEM	IDENT
2TP1-3M	
30-40-15 12	ED-CG
30-40-20 03	EB-CG
30-40-20 03	ED-CG
30-40-20 05	EB-CG
30-40-20 05	ED-CG
33-50-10 09	CS-CG
80-10-10 04	NC-CG
80-10-10 04	ND-CG
2TP1-7	
24-30-10 02	LK-CG
24-30-20 02	LM-CG
24-30-20 03	LM-CG
26-20-10 03	RH-CG
26-20-10 03	RR-CG
30-80-10 02	LA-CG
2TP1-7M	
24-30-10 02	LK-CG
26-20-10 03	RH-CG
26-20-10 03	RR-CG
30-80-10 02	LA-CG
30-80-10 03	LA-CG
2TP1-70	
24-21-17 03	LU-CG
24-21-17 03	LX-CG
24-50-01 05	LL-CG
24-50-01 06	LL-CG
24-50-01 07	LL-CG
2TP1-70M	
24-21-17 03	LU-CG
24-21-17 03	LX-CG
24-21-17 04	LU-CG
24-21-17 04	LX-CG
24-50-01 06	LL-CG
24-50-01 07	LL-CG
2TP8-1	
33-30-15 07	CE-CG
205209-1	
78-30-05 01	P804
78-30-05 02	P804
206478-4	
78-30-05 01	P804
78-30-05 02	P804
2070C01	
28-21-05 02	105-LH
28-21-05 02	105-RH
28-21-05 03	105-LH
28-21-05 03	105-RH
2070C11	
28-21-05 02	105-LH
28-21-05 02	105-RH

PART NUMBER CH-SECT-UNIT-FIG-ITEM	IDENT
2070C11	
28-21-05 03	105-LH
28-21-05 03	105-RH
20745-8	
27-33-00 05	RC-SSU1
27-33-00 05	RC-SSU1
27-33-00 05	RD-SSU2
27-33-00 05	RD-SSU2
27-33-00 07	RC-SSU1
27-33-00 07	RC-SSU1
27-33-00 07	RD-SSU2
27-33-00 07	RD-SSU2
21EN108-6	
27-00-10 03	HM
27-00-10 03	HN
27-00-10 04	HM
27-00-10 04	HN
27-33-00 05	JHA
27-33-00 05	JJA
27-33-00 05	KHA
27-33-00 05	KJA
27-33-00 07	JHA
27-33-00 07	JJA
27-33-00 07	KHA
27-33-00 07	KJA
2101822-1	
73-20-01 05	TG
73-20-02 05	TG
2113211-1	
73-20-01 05	P1-TG
73-20-01 05	P1-UD
73-20-01 05	P3-TZ
2118002-6	
73-20-01 05	UD
73-20-02 05	GD
2118114-1-2	
73-20-01 05	TZ
73-20-02 05	TZ
2121-01-0013	
79-30-10 02	AJ-CC
79-30-10 02	AL-CC
2121-01-0014	
79-30-10 02	AF-CC
79-30-10 02	AH-CC
2132-01-0011	
27-50-10 02	U-CC
2132-01-0012	
24-50-01 05	JR-CG
24-50-01 06	JR-CG
24-50-01 07	JR-CG
33-10-05 05	JR-CG

PART NUMBER CH-SECT-UNIT-FIG-ITEM	IDENT
2132-01-0012	
33-10-05 07	JR-CG
33-10-05 08	JR-CG
33-10-05 09	JR-CG
33-10-05 11	JR-CG
2132-01-0013	
24-30-10 02	JP-CG
24-30-20 02	JS-CG
24-30-20 03	JS-CG
33-10-05 05	JP-CG
33-10-05 05	JS-CG
33-10-05 07	JP-CG
33-10-05 07	JS-CG
33-10-05 08	JP-CG
33-10-05 08	JS-CG
33-10-05 09	JP-CG
33-10-05 09	JS-CG
33-10-05 11	JP-CG
33-10-05 11	JS-CG
2132-01-0014	
24-21-17 03	JT-CG
24-21-17 04	JT-CG
33-10-05 05	JT-CG
33-10-05 07	JT-CG
33-10-05 08	JT-CG
33-10-05 09	JT-CG
33-10-05 11	JT-CG
2132-01-0015	
21-60-20 02	NR-CG
21-60-20 03	NR-CG
33-10-05 05	NR-CG
33-10-05 07	NR-CG
33-10-05 08	NR-CG
33-10-05 09	NR-CG
33-10-05 11	NR-CG
2132-01-0017	
30-30-31 02	EG-CG
33-10-05 05	EG-CG
33-10-05 07	EG-CG
33-10-05 08	EG-CG
33-10-05 09	EG-CG
33-10-05 11	EG-CG
2132-01-0018	
21-60-20 02	NP-CG
21-60-20 03	NP-CG
33-10-05 05	NP-CG
33-10-05 07	NP-CG
33-10-05 08	NP-CG
33-10-05 09	NP-CG
33-10-05 11	NP-CG
21346-5	

PART NUMBER CH-SECT-UNIT-FIG-ITEM	IDENT
21346-5	
21-60-10 08	US
21-60-10 10	US
21-60-10 11	US
21346-6	
21-60-10 08	US
21-60-10 10	US
21-60-10 11	US
214C40-2-57	
R 21-31-10 07	SW-DAH
2141-01-0014	
31-20-35 02	WP
31-20-35 03	WP
223-662-9301	
30-20-10 02	P4-LHE
30-20-10 02	P4-RHE
225-22811-201	
31-50-01 04	S1-DAL-R
31-50-01 04	S10-DAL-R
31-50-01 04	S11-DAL-R
31-50-01 04	S2-DAL-R
31-50-01 04	S3-DAL-R
31-50-01 04	S4-DAL-R
31-50-01 04	S5-DAL-R
31-50-01 04	S6-DAL-R
31-50-01 04	S7-DAL-R
31-50-01 04	S8-DAL-R
31-50-01 04	S9-DAL-R
31-50-01 07	S1-DAL-R
31-50-01 07	S10-DAL-R
31-50-01 07	S11-DAL-R
31-50-01 07	S2-DAL-R
31-50-01 07	S3-DAL-R
31-50-01 07	S4-DAL-R
31-50-01 07	S5-DAL-R
31-50-01 07	S6-DAL-R
31-50-01 07	S7-DAL-R
31-50-01 07	S8-DAL-R
31-50-01 07	S9-DAL-R
31-50-01 08	S1-DAL-R
31-50-01 08	S10-DAL-R
31-50-01 08	S11-DAL-R
31-50-01 08	S12-DAL-R
31-50-01 08	S2-DAL-R
31-50-01 08	S3-DAL-R
31-50-01 08	S4-DAL-R
31-50-01 08	S5-DAL-R
31-50-01 08	S6-DAL-R
31-50-01 08	S7-DAL-R
31-50-01 08	S8-DAL-R
31-50-01 08	S9-DAL-R

PART NUMBER CH-SECT-UNIT-FIG-ITEM	IDENT
225-22811-201	
31-50-01 09	S1-DAL-R
31-50-01 09	S10-DAL-R
31-50-01 09	S11-DAL-R
31-50-01 09	S2-DAL-R
31-50-01 09	S3-DAL-R
31-50-01 09	S4-DAL-R
31-50-01 09	S5-DAL-R
31-50-01 09	S6-DAL-R
31-50-01 09	S7-DAL-R
31-50-01 09	S8-DAL-R
31-50-01 09	S9-DAL-R
31-50-01 14	S1-DAL-R
31-50-01 14	S10-DAL-R
31-50-01 14	S11-DAL-R
31-50-01 14	S2-DAL-R
31-50-01 14	S3-DAL-R
31-50-01 14	S4-DAL-R
31-50-01 14	S5-DAL-R
31-50-01 14	S6-DAL-R
31-50-01 14	S7-DAL-R
31-50-01 14	S8-DAL-R
31-50-01 14	S9-DAL-R
225550-2	
34-30-10 53	P211P1
34-30-10 53	P291
34-30-20 53	P211P2
225551-2	
34-30-10 53	J291
225830-2	
34-30-10 53	P217
23AT73T2	
49-60-30 06	S3-DE
49-60-30 06	S6-DE
49-60-30 08	S3-DE
49-60-30 08	S6-DE
49-60-30 09	S3-DE
49-60-30 09	S6-DE
49-60-30 11	S3-DE
49-60-30 11	S6-DE
23AT74T2	
49-60-30 06	S1-DE
49-60-30 08	S1-DE
49-60-30 09	S1-DE
49-60-30 11	S1-DE
23080-005	
24-30-10 02	LA
24-30-10 02	LA
24-30-20 02	MA
24-30-20 02	MA
24-30-20 03	MA

PART NUMBER CH-SECT-UNIT-FIG-ITEM	IDENT
23080-005	
24-30-20 03	MA
49-60-10 05	K-TQ
49-60-10 05	K-TQ
23080-006	
49-60-30 06	GD
49-60-30 08	GD
49-60-30 09	GD
49-60-30 11	GD
23491	
31-20-35 02	ZM
31-20-35 02	ZN
23491-3	
24-50-01 05	ZM
24-50-01 05	ZM
24-50-01 05	ZN
24-50-01 05	ZN
24-289-253267B	
24-30-10 02	
24TNC75-4-1C	
23-31-10 58	J630
23-31-10 65	J630
25-6MC415	
21-60-10 08	NT-CG
21-60-10 10	NT-CG
21-60-10 11	NT-CG
25-6NF1387A	
32-60-30 02	WR
32-60-30 03	WR
25-6NF1453-17	
21-60-10 08	EC
21-60-10 10	EC
21-60-10 11	EC
25-6NF1909A	
31-50-01 04	G-S10-DAL
31-50-01 07	G-S10-DAL
31-50-01 08	G-S10-DAL
31-50-01 09	G-S10-DAL
31-50-01 14	G-S10-DAL
25-6NF693-3A	
31-50-01 04	B-S1-DAL
31-50-01 04	B-S3-DAL
31-50-01 04	B-S5-DAL
31-50-01 04	B-S6-DAL
31-50-01 07	B-S1-DAL
31-50-01 07	B-S3-DAL
31-50-01 07	B-S5-DAL
31-50-01 07	B-S6-DAL
31-50-01 08	B-S1-DAL
31-50-01 08	B-S3-DAL
31-50-01 08	B-S5-DAL

PART NUMBER CH-SECT-UNIT-FIG-ITEM	IDENT
25-6NF693-3A	
31-50-01 08	B-S6-DAL
31-50-01 09	B-S1-DAL
31-50-01 09	B-S3-DAL
31-50-01 09	B-S5-DAL
31-50-01 09	B-S6-DAL
31-50-01 14	B-S1-DAL
31-50-01 14	B-S3-DAL
31-50-01 14	B-S5-DAL
31-50-01 14	B-S6-DAL
25-6NF693-41A	
31-50-01 04	J-S2-DAL
31-50-01 07	J-S2-DAL
31-50-01 08	J-S2-DAL
31-50-01 09	J-S2-DAL
31-50-01 14	J-S2-DAL
25-7FC379-97A	
21-60-10 08	SJ
21-60-10 10	SJ
21-60-10 11	SJ
25-7NF155A	
49-60-10 05	K-GA
25-7NF1565	
30-10-10 11	LD-CG
25-7NF1815-5A	
24-21-17 03	H-XZ
24-21-17 03	H-XZ
24-21-17 03	J-XZ
24-21-17 03	J-XZ
24-21-17 04	H-XZ
24-21-17 04	J-XZ
24-50-01 07	BB-ZK
27-24-10 02	UA
27-24-10 02	UB
27-24-10 03	UA
27-24-10 03	UB
27-61-20 04	BX-BA
28-41-20 03	R-JA
33-40-15 02	C-AP
33-40-15 02	D-AP
49-60-30 06	1-BB-ZK
25-7NF1815-9A	
27-61-20 04	A-EP
25-7NF2257-1A	
26-10-10 03	PY
25-7NF785-51A	
31-50-01 04	K-S7-DAL
31-50-01 07	K-S7-DAL
31-50-01 08	K-S12-DAL
31-50-01 08	K-S7-DAL
31-50-01 09	K-S7-DAL

PART NUMBER CH-SECT-UNIT-FIG-ITEM	IDENT
25-7NF785-51A	
31-50-01 14	K-S7-DAL
25-7NF785-53A	
31-50-01 04	L-S8-DAL
31-50-01 04	L-S9-DAL
31-50-01 07	L-S8-DAL
31-50-01 07	L-S9-DAL
31-50-01 08	L-S8-DAL
31-50-01 08	L-S9-DAL
31-50-01 09	L-S8-DAL
31-50-01 09	L-S9-DAL
31-50-01 14	L-S8-DAL
31-50-01 14	L-S9-DAL
25-7NF885A	
21-60-10 08	HA-DAH
21-60-10 10	HA-DAH
25-7NF893A	
28-41-20 03	EA-DB
25-7TP25-1	
33-30-15 07	HS
25-7TP25-2	
33-30-15 07	HT
25-8FC919-1A	
23-31-10 58	ERLH
23-31-10 65	ERLH
25-8FR445-1A	
31-50-05 03	E-UC
31-50-05 03	H-UC
25-8MC241-1A	
33-10-20 07	P1-CC
25-8MC535-1A	
33-10-20 07	P6-CC
25-8MC599-1A	
33-10-20 08	P1-CC
25-8MC603-5	
33-10-05 08	L1
33-10-05 09	L1
33-10-05 11	L1
25-8MC603-6	
33-10-05 08	L13
33-10-05 09	L13
33-10-05 11	L13
25-8MC621-1A	
33-10-20 08	P6-CC
25-8NA5-1003B	
24-50-05 11	
25-8NA5-101A	
24-30-10 02	
25-8NA5-101B	
24-30-20 02	
25-8NA5-1012A	

PART NUMBER CH-SECT-UNIT-FIG-ITEM	IDENT
25-8NA5-1012A 33-10-05 11	
25-8NA5-1020A 30-40-15 11	
25-8NA5-1024 21-60-10 11	
25-8NA5-1046 30-10-10 11	
25-8NA5-108 28-21-05 02	
25-8NA5-1083 49-60-30 11	
25-8NA5-110B 33-40-15 02	
25-8NA5-1120A 30-40-15 12	
25-8NA5-116B 32-60-20 02	
25-8NA5-117 32-60-30 02	
25-8NA5-125A 30-30-31 02	
25-8NA5-125B 30-30-10 02	
25-8NA5-125C 30-30-20 02	
25-8NA5-126 77-10-10 02	
25-8NA5-128 77-20-10 02	
25-8NA5-129 28-40-20 02	
25-8NA5-130 79-30-10 02	
25-8NA5-1303B 24-50-05 14	
25-8NA5-132 28-40-40 02	
25-8NA5-133 31-20-35 02	
25-8NA5-135 27-50-10 02	
25-8NA5-1351 31-50-01 14	
25-8NA5-139 31-20-60 02	
25-8NA5-1403B 24-50-05 15	
25-8NA5-145 30-20-10 02	
25-8NA5-147	

PART NUMBER CH-SECT-UNIT-FIG-ITEM	IDENT
25-8NA5-147 30-80-10 02	
25-8NA5-149 26-10-20 02	
25-8NA5-150 21-30-10 02	
25-8NA5-157 52-70-10 02	
25-8NA5-158 28-42-10 02	
25-8NA5-160 78-30-05 02	
25-8NA5-162 27-24-10 02	
25-8NA5-167 21-60-20 02	
25-8NA5-179 29-31-10 02	
25-8NA5-190A 28-41-10 02	
25-8NA5-190C 28-41-30 02	
25-8NA5-191 77-40-10 02	
25-8NA5-201B 24-30-20 03	
25-8NA5-205 24-21-17 03	
25-8NA5-208 28-21-05 03	
25-8NA5-211 33-40-30 03	
25-8NA5-217 32-60-30 03	
25-8NA5-220B 30-40-20 03	
25-8NA5-222 26-20-10 03	
25-8NA5-227 26-10-10 03	
25-8NA5-233 31-20-35 03	
25-8NA5-240 27-61-10 03	
25-8NA5-247 30-80-10 03	
25-8NA5-254 26-10-30 03	
25-8NA5-262 27-24-10 03	
25-8NA5-263C	

PART NUMBER CH-SECT-UNIT-FIG-ITEM	IDENT
25-8NA5-263C	
73-20-10 03	
25-8NA5-267	
21-60-20 03	
25-8NA5-274	
21-20-10 03	
25-8NA5-277	
31-50-05 03	
25-8NA5-290A	
28-41-10 03	
25-8NA5-290B	
28-41-20 03	
25-8NA5-293	
27-00-10 03	
25-8NA5-3012C	
33-10-10 31	
25-8NA5-304	
80-10-10 04	
25-8NA5-305	
24-21-17 04	
25-8NA5-307	
28-40-10 04	
25-8NA5-308	
28-21-05 04	
25-8NA5-310	
33-40-20 04	
25-8NA5-312B	
33-10-20 04	
25-8NA5-316A	
32-60-10 04	
25-8NA5-340	
27-61-10 04	
25-8NA5-340B	
27-61-20 04	
25-8NA5-350	
21-30-10 04	
25-8NA5-351	
31-50-01 04	
25-8NA5-368	
34-13-01 04	
25-8NA5-388	
33-31-10 04	
25-8NA5-393	
27-00-10 04	
25-8NA5-403A	
24-50-01 05	
25-8NA5-403C	
24-90-01 05	
25-8NA5-407	
28-40-10 05	
25-8NA5-409	

PART NUMBER CH-SECT-UNIT-FIG-ITEM	IDENT
25-8NA5-409	
33-40-10 05	
33-40-10 06	
25-8NA5-412A	
33-10-05 05	
25-8NA5-420B	
30-40-20 05	
25-8NA5-431	
28-40-30 05	
25-8NA5-442	
29-32-10 05	
25-8NA5-455	
27-33-00 05	
25-8NA5-463A	
73-20-01 05	
25-8NA5-463B	
73-20-02 05	
25-8NA5-483A	
49-60-10 05	
25-8NA5-503A	
24-50-01 06	
25-8NA5-503C	
24-90-01 06	
25-8NA5-506	
24-53-10 06	
25-8NA5-5238D	
22-10-40 53	
25-8NA5-583	
49-60-30 06	
25-8NA5-60	
78-30-05 01	
25-8NA5-603A	
24-50-01 07	
25-8NA5-612A	
33-10-05 07	
25-8NA5-612B	
33-10-20 07	
25-8NA5-614A	
33-30-05 07	
25-8NA5-614C	
33-30-15 07	
25-8NA5-620A	
30-40-15 07	
25-8NA5-644	
21-31-10 07	
25-8NA5-651	
31-50-01 07	
25-8NA5-655	
27-33-00 07	
25-8NA5-6603E	
24-50-07 67	

PART NUMBER CH-SECT-UNIT-FIG-ITEM	IDENT
25-8NA5-689	
27-30-10 07	
25-8NA5-703B	
24-50-05 08	
25-8NA5-706	
24-53-10 08	
25-8NA5-712A	
33-10-05 08	
25-8NA5-712B	
33-10-20 08	
25-8NA5-714A	
33-30-05 08	
25-8NA5-724	
21-60-10 08	
25-8NA5-740	
27-61-10 08	
25-8NA5-751	
31-50-01 08	
25-8NA5-768	
34-13-01 08	
25-8NA5-783	
49-60-30 08	
25-8NA5-789	
27-30-10 08	
25-8NA5-812A	
33-10-05 09	
25-8NA5-851	
31-50-01 09	
25-8NA5-873	
33-50-10 09	
25-8NA5-883	
49-60-30 09	
25-8NA5-913C	
33-20-10 10	
25-8NA5-920A	
30-40-15 10	
25-8NA5-924	
21-60-10 10	
25-8NF205-503A	
31-50-01 04	Z-DAE
31-50-01 07	Z-DAE
31-50-01 08	Z-DAE
31-50-01 09	Z-DAE
31-50-01 14	Z-DAE
25-8NF2061-1A	
30-40-15 07	VV
30-40-15 07	VZ
30-40-15 10	VV
30-40-15 10	VZ
25-8NF2065-1A	
30-40-15 07	VU

PART NUMBER CH-SECT-UNIT-FIG-ITEM	IDENT
25-8NF2065-1A	
30-40-15 07	VY
30-40-15 10	VU
30-40-15 10	VY
25-8NF2067-1A	
30-40-20 03	VN
30-40-20 03	VR
25-8NF2217-10	
49-60-30 06	B127-DAD
49-60-30 06	B128-DAD
49-60-30 08	B127-DAD
49-60-30 08	B128-DAD
49-60-30 09	B127-DAD
49-60-30 09	B128-DAD
49-60-30 11	B127-DAD
49-60-30 11	B128-DAD
25-8NF2217-15	
21-20-10 03	B132-DAD
24-50-05 08	B132-DAD
24-50-05 08	B44-DAD
24-50-05 08	B54-DAD
24-50-05 08	B63-DAD
24-50-05 08	B73-DAD
24-50-05 11	B127-DAD
24-50-05 11	B132-DAD
24-50-05 11	B44-DAD
24-50-05 11	B54-DAD
24-50-05 11	B63-DAD
24-50-05 11	B73-DAD
24-50-05 14	B127-DAD
24-50-05 14	B132-DAD
24-50-05 14	B44-DAD
24-50-05 14	B54-DAD
24-50-05 14	B63-DAD
24-50-05 14	B73-DAD
24-50-05 15	B127-DAD
24-50-05 15	B132-DAD
24-50-05 15	B44-DAD
24-50-05 15	B54-DAD
24-50-05 15	B63-DAD
24-50-05 15	B73-DAD
24-50-07 67	B144-DAD
24-50-07 67	B151-DAD
24-50-07 67	B152-DAD
30-30-31 02	B44-DAD
30-30-31 02	B54-DAD
33-30-15 07	B144-DAD
33-40-15 02	B151-DAD
33-40-15 02	B152-DAD
33-40-20 04	B63-DAD
33-40-20 04	B73-DAD

PART NUMBER CH-SECT-UNIT-FIG-ITEM	IDENT
25-8NF2217-15	
49-60-30 06	CB2-ZKA
49-60-30 08	CB2-ZKA
49-60-30 09	CB2-ZKA
49-60-30 11	CB2-ZKA
25-8NF2217-20	
24-50-05 08	B120-DAD
24-50-05 11	B120-DAD
24-50-05 14	B120-DAD
24-50-05 15	B120-DAD
25-8NF2217-25	
24-50-05 08	B26-DAD
24-50-05 08	B27-DAD
24-50-05 08	B36-DAD
24-50-05 08	B37-DAD
24-50-05 11	B26-DAD
24-50-05 11	B27-DAD
24-50-05 11	B36-DAD
24-50-05 11	B37-DAD
24-50-05 14	B26-DAD
24-50-05 14	B27-DAD
24-50-05 14	B36-DAD
24-50-05 14	B37-DAD
24-50-05 15	B26-DAD
24-50-05 15	B27-DAD
24-50-05 15	B36-DAD
24-50-05 15	B37-DAD
28-21-05 02	B26-DAD
28-21-05 02	B27-DAD
28-21-05 02	B36-DAD
28-21-05 02	B37-DAD
28-21-05 03	B26-DAD
28-21-05 03	B27-DAD
28-21-05 03	B36-DAD
28-21-05 03	B37-DAD
28-21-05 04	B26-DAD
28-21-05 04	B27-DAD
28-21-05 04	B36-DAD
28-21-05 04	B37-DAD
25-8NF2217-7	
24-50-05 08	B61-DAD
24-50-05 08	B62-DAD
24-50-05 11	B61-DAD
24-50-05 11	B62-DAD
24-50-05 14	B61-DAD
24-50-05 14	B62-DAD
24-50-05 15	B61-DAD
24-50-05 15	B62-DAD
33-40-10 05	B61-DAD
33-40-10 06	B61-DAD
25-8NF225A	

PART NUMBER CH-SECT-UNIT-FIG-ITEM	IDENT
25-8NF225A	
21-31-10 07	BN-BA
25-8NF2371-31A	
24-50-05 08	D-XZ
24-50-05 11	A-D-XZ
24-50-05 11	B-D-XZ
24-50-05 11	D-XZ
24-50-05 14	A-D-XZ
24-50-05 14	B-D-XZ
24-50-05 14	D-XZ
24-50-05 15	A-D-XZ
24-50-05 15	B-D-XZ
24-50-05 15	D-XZ
25-8NF2619-1A	
29-32-10 05	T-DAH
25-8NF2667-1A	
30-10-10 11	JT-DAH
25-8NF275-1A	
24-30-10 02	M-GA
25-8NF2755A	
30-20-10 02	J12-TA2
25-8NF2757A	
30-20-10 02	J12-TB2
25-8NF2921-1A	
33-10-05 05	CE
33-10-05 05	CP
33-10-05 07	CE
33-10-05 07	CP
33-10-05 08	CE
33-10-05 08	CP
33-10-05 09	CE
33-10-05 09	CP
33-10-05 11	CE
33-10-05 11	CP
25-8NF3531	
22-10-40 53	W192
25-8NF355-17A	
31-50-01 04	S-S4-DAL
31-50-01 07	S-S4-DAL
31-50-01 08	S-S4-DAL
31-50-01 09	S-S4-DAL
25-8NF355-29A	
31-50-01 14	U-S4-DAL
25-8NF3583	
33-10-05 07	PB-BA
25-8NF3587	
33-10-05 07	PB-BA
25-8NF3589-3A	
22-10-40 53	PLCB
25-8NF3669	
33-10-05 08	CB-BA

PART NUMBER CH-SECT-UNIT-FIG-ITEM	IDENT
25-8NF3669	
33-10-05 09	CB-BA
33-10-05 11	CB-BA
25-8NF3685-1A	
27-33-00 05	Z-CA
27-33-00 05	Z-CD
27-33-00 07	Z-CA
27-33-00 07	Z-CD
25-8NF397-503A	
33-10-20 04	C-Y-DAE
33-10-20 04	D-Y-DAE
33-10-20 04	E-Y-DAE
33-10-20 04	Y-DAE
33-10-20 07	C-Y-DAE
33-10-20 07	D-Y-DAE
33-10-20 07	E-Y-DAE
33-10-20 07	Y-DAE
33-10-20 08	Y-DAE
25-8NF399-503A	
33-10-05 05	C-V-DAE
33-10-05 05	D-V-DAE
33-10-05 05	V-DAE
33-10-05 07	C-V-DAE
33-10-05 07	D-V-DAE
33-10-05 07	V-DAE
33-10-05 08	C-V-DAE
33-10-05 08	D-V-DAE
33-10-05 08	V-DAE
33-10-05 09	V-DAE
33-10-05 11	C-V-DAE
33-10-05 11	D-V-DAE
33-10-05 11	V-DAE
25-8NF401-503A	
33-10-05 05	C-X-DAE
33-10-05 05	X-DAE
33-10-05 07	C-X-DAE
33-10-05 07	X-DAE
33-10-05 08	C-X-DAE
33-10-05 08	X-DAE
33-10-05 09	X-DAE
33-10-05 11	C-X-DAE
33-10-05 11	X-DAE
25-8NF403-503A	
33-10-05 05	W-DAE
33-10-05 07	W-DAE
33-10-05 08	W-DAE
33-10-05 09	W-DAE
33-10-05 11	W-DAE
25-8NF405-503A	
31-50-01 04	S-DAE
31-50-01 07	S-DAE

PART NUMBER CH-SECT-UNIT-FIG-ITEM	IDENT
25-8NF405-503A	
31-50-01 08	S-DAE
31-50-01 09	S-DAE
31-50-01 14	S-DAE
33-10-05 05	C-S-DAE
33-10-05 05	S-DAE
33-10-05 07	C-S-DAE
33-10-05 07	S-DAE
33-10-05 08	C-S-DAE
33-10-05 08	S-DAE
33-10-05 09	S-DAE
33-10-05 11	C-S-DAE
33-10-05 11	S-DAE
33-10-20 04	D-S-DAE
33-10-20 04	E-S-DAE
33-10-20 04	S-DAE
33-10-20 07	D-S-DAE
33-10-20 07	E-S-DAE
33-10-20 07	S-DAE
33-10-20 08	S-DAE
25-8NF407-503A	
33-10-05 05	D-T-DAE
33-10-05 05	T-DAE
33-10-05 07	D-T-DAE
33-10-05 07	T-DAE
33-10-05 08	D-T-DAE
33-10-05 08	T-DAE
33-10-05 09	T-DAE
33-10-05 11	D-T-DAE
33-10-05 11	T-DAE
33-10-20 04	C-T-DAE
33-10-20 04	E-T-DAE
33-10-20 04	T-DAE
33-10-20 07	C-T-DAE
33-10-20 07	E-T-DAE
33-10-20 07	T-DAE
33-10-20 08	T-DAE
25-8NF409-503A	
33-10-20 04	C-U-DAE
33-10-20 04	E-U-DAE
33-10-20 04	U-DAE
33-10-20 07	C-U-DAE
33-10-20 07	E-U-DAE
33-10-20 07	U-DAE
33-10-20 08	U-DAE
25-8NF441-31A	
33-10-20 04	J-AA
33-10-20 04	K-AA
33-10-20 04	K-AB
25-8NF4443A	
21-60-10 11	HA-DAH

PART NUMBER CH-SECT-UNIT-FIG-ITEM	IDENT
25-8NF4443A	
21-60-10 11	HA-X
25-8NF4459-27A	
21-60-10 10	TD-DAB
21-60-10 11	TD-DAB
25-8NF4497-1	
21-20-10 03	YY
25-8NF4661-1A	
24-90-01 05	AQ-DAC
24-90-01 06	AQ-DAC
30-80-10 03	AQ-DAC
25-8NF4805-1A	
30-10-10 11	SA
25-8NF4891-1	
24-30-20 02	L-GA
24-30-20 03	L-GA
25-8NF5031-1A	
26-10-10 03	PY
25-8NF593	
33-10-20 04	CC2-R
33-10-20 07	CC2-R
33-10-20 08	CC2-R
25-8NF615-1A	
31-50-01 04	F-CY
31-50-01 07	F-CY
31-50-01 08	F-CY
31-50-01 09	F-CY
31-50-01 14	F-CY
33-10-05 08	L12
33-10-05 09	L12
33-10-05 11	L12
25-8NF615-3A	
31-50-01 04	B-CY
31-50-01 07	B-CY
31-50-01 08	B-CY
31-50-01 09	B-CY
31-50-01 14	B-CY
33-10-05 08	L24
33-10-05 09	L24
33-10-05 11	L24
25-8NF6225-1A	
26-10-10 03	PY
25-8NF761-41A	
31-50-01 04	H-S11-DAL
31-50-01 07	H-S11-DAL
31-50-01 08	H-S11-DAL
31-50-01 09	H-S11-DAL
31-50-01 14	H-S11-DAL
25-8NF823-7	
33-40-10 05	B62-DAD
33-40-10 06	B62-DAD

PART NUMBER CH-SECT-UNIT-FIG-ITEM	IDENT
25-8NF841-1A	
27-30-10 07	A-EP
27-30-10 07	EP
27-30-10 08	A-EP
27-30-10 08	EP
25-8NF905-1A	
33-10-05 05	BK
33-10-05 05	BL
33-10-05 07	BK
33-10-05 07	BL
33-10-05 08	BK
33-10-05 08	BL
33-10-05 09	BK
33-10-05 09	BL
33-10-05 11	BK
33-10-05 11	BL
25-8NF977-1A	
27-33-00 05	AA-DAH
27-33-00 07	AA-DAH
25-8NF977-3A	
27-33-00 05	AB-DAH
27-33-00 07	AB-DAH
25-8NF977-5A	
27-33-00 05	AC-DAH
27-33-00 07	AC-DAH
30-10-10 11	AC-DAH
25-8NW47A	
73-20-10 03	KP
25-8NW7-13A	
28-40-10 04	JZ-P
28-40-10 04	KZ-P
28-40-10 05	JZ-P
28-40-10 05	KZ-P
25-8NW87A	
32-60-30 02	JP
32-60-30 03	JP
25-8RA5-5162B	
23-31-20 52	
25-8RA5-5232A	
34-30-10 53	
25-8RA5-5232B	
34-30-20 53	
25-8RA5-5762A	
23-31-10 58	
25-8RA5-6462A	
23-31-10 65	
25-8RF4219-1A	
23-31-20 52	A626
25-9MC75-1A	
33-10-05 11	P2-CC
25CXZ109-7	

PART NUMBER CH-SECT-UNIT-FIG-ITEM	IDENT
25CXZ109-7	
27-61-20 04	BV-BA
25DC237-9	
33-10-05 05	CK
33-10-05 05	CL
33-10-05 07	CK
33-10-05 07	CL
33-10-05 08	CK
33-10-05 08	CL
33-10-05 09	CK
33-10-05 09	CL
33-10-05 11	CK
33-10-05 11	CL
25NFZ3947-3	
80-10-10 04	J-ZL
80-10-10 04	K-ZL
25NF9557A	
33-10-05 05	CH
33-10-05 05	CJ
33-10-05 07	CH
33-10-05 07	CJ
33-10-05 08	CH
33-10-05 08	CJ
33-10-05 09	CH
33-10-05 09	CJ
33-10-05 11	CH
33-10-05 11	CJ
2909-2015	
49-60-30 06	R1-ZKA
49-60-30 08	R1-ZKA
49-60-30 09	R1-ZKA
49-60-30 11	R1-ZKA
3BA002768-18	
32-60-10 04	A-PQ
3TC2-35	
24-50-05 08	B5-GA
24-50-05 08	B6-GA
24-50-05 11	B5-GA
24-50-05 11	B6-GA
24-50-05 14	B5-GA
24-50-05 14	B6-GA
24-50-05 15	B5-GA
24-50-05 15	B6-GA
30-0516-1	
33-40-10 06	GL
30-0531-1	
33-40-10 05	GL
30-0538-7	
33-40-10 05	JG
33-40-10 06	JG
30-0538-8	

PART NUMBER CH-SECT-UNIT-FIG-ITEM	IDENT
30-0538-8	
33-40-10 05	KG
33-40-10 06	KG
30-231-15	
31-50-05 03	C-UC
31-50-05 03	F-UC
3001-133	
26-10-10 03	LM
26-10-10 03	MM
30180B25	
33-31-10 04	GF
30402104	
49-60-30 06	Z3
49-60-30 08	Z3
49-60-30 09	Z3
49-60-30 11	Z3
3071437-2	
77-40-10 02	CD-LH
77-40-10 02	CD-RH
3071437-3	
77-40-10 02	CD-LH
77-40-10 02	CD-RH
3071437-4	
77-40-10 02	CD-LH
77-40-10 02	CD-RH
3074216-1	
30-20-10 02	P4-LHE
30-20-10 02	P4-RHE
3074256-3	
73-20-01 05	J12-TA2
73-20-01 05	J3-TA5
73-20-01 05	J8-ADAPTO
73-20-01 05	P12-TA2
73-20-01 05	P23-TZ
73-20-01 05	P3-TA5
73-20-01 05	P8-TA6
77-10-10 02	P12-TA2
77-10-10 02	P8-TA6
3074256-4	
77-10-10 02	P12-TB2
77-10-10 02	P8-TB6
309-4316	
27-30-10 07	BV
27-30-10 07	BY
27-30-10 08	BV
27-30-10 08	BY
320559	
27-30-10 07	TX
27-30-10 08	TX
321262-1	
21-60-10 08	QJ

PART NUMBER CH-SECT-UNIT-FIG-ITEM	IDENT
321262-1	
21-60-10 10	QJ
21-60-10 11	QJ
321292-1	
21-60-10 08	GY
21-60-10 08	GZ
21-60-10 10	GY
21-60-10 10	GZ
21-60-10 11	GY
21-60-10 11	GZ
321776-1-1	
21-60-10 08	QE
21-60-10 10	QE
21-60-10 11	QE
33200002	
26-20-10 03	GH
26-20-10 03	GJ
33200002-3	
26-20-10 03	GH
26-20-10 03	GJ
335-0074-000	
34-30-10 53	X209P1
34-30-10 53	X209P2
34-30-20 53	X244P1
34-30-20 53	X244P2
350547-1	
33-40-10 06	NL2-P
350550-1	
33-40-10 06	NL2-R
3515000-105	
28-41-10 02	B-KL
28-41-10 03	B-KL
3515000-106	
28-41-20 03	JY
28-41-20 03	KY
3515000-107	
28-41-30 02	JDA
28-41-30 02	KDA
3515000-149	
28-41-10 02	A-KL
28-41-10 03	A-KL
3515000-76	
29-31-10 02	NX
37X2	
34-30-10 53	E217
4-013-01	
33-10-05 05	C-AB
33-10-05 07	C-AB
33-10-20 04	C-AA
4-013-02	
33-10-20 04	A-AA

PART NUMBER CH-SECT-UNIT-FIG-ITEM	IDENT
4-013-02	
33-10-20 04	A-AB
4TL1-7	
49-60-10 05	E-DE
4TL1-70	
49-60-30 06	S7-DE
49-60-30 08	S7-DE
49-60-30 09	S7-DE
49-60-30 11	S7-DE
4TP1-10	
24-50-01 05	EN-CG
24-50-01 06	EN-CG
24-50-01 07	EN-CG
80-10-10 04	EN-CG
4TP1-10M	
24-50-01 06	EN-CG
24-50-01 07	EN-CG
80-10-10 04	EN-CG
403CC80R6PM0-5P * CT	
24-50-01 05	RE-DAB
24-50-01 05	RF-DAB
24-50-01 06	RE-DAB
24-50-01 06	RF-DAB
24-50-01 07	RE-DAB
24-50-01 07	RF-DAB
404-8-02811-007	
33-10-05 08	BM-CG
33-10-20 07	D
33-10-20 07	E
33-10-20 07	U
418538	
30-10-10 11	BA-DAB
49-60-10 05	R-GA
418539	
30-40-15 07	BB-DAB
30-40-15 07	BC-DAB
30-40-15 10	BB-DAB
30-40-15 10	BC-DAB
30-40-15 11	BB-DAB
30-40-15 11	BC-DAB
30-40-15 12	BB-DAB
30-40-15 12	BC-DAB
422250-16	
33-40-10 05	HQ
33-40-10 06	HQ
422250-17	
23-31-10 58	EDF
23-31-10 65	EDF
28-41-10 02	DF
28-41-10 03	DF

PART NUMBER CH-SECT-UNIT-FIG-ITEM	IDENT
422250-17	
28-41-20 03	DF
28-41-30 02	DF
422252-12	
22-10-40 53	ER
27-30-10 07	ER
27-30-10 08	ER
422253-15	
29-31-10 02	CV
30-80-10 02	CV
30-80-10 03	CV
31-20-35 02	CV
31-20-35 03	CV
31-20-60 02	CV
32-60-10 04	CV
33-10-05 05	CV
33-10-05 07	CV
33-10-05 08	CV
33-10-05 09	CV
33-10-05 11	CV
33-10-20 04	CV
33-10-20 07	CV
33-10-20 08	CV
33-40-15 02	CV
33-50-10 09	CV
422254-10	
34-30-10 53	E422
422254-8	
27-00-10 03	DC
27-00-10 04	DC
27-33-00 05	DC
27-33-00 07	DC
27-50-10 02	DC
27-61-10 03	DC
27-61-10 04	DC
27-61-10 08	DC
28-21-05 02	DC
28-21-05 03	DC
28-21-05 04	DC
28-40-10 04	DC
28-40-10 05	DC
32-60-10 04	DC
32-60-20 02	DC
32-60-30 02	DC
32-60-30 03	DC
33-30-05 07	DC
33-40-10 05	DC
33-40-10 06	DC
33-40-20 04	DC
33-40-30 03	DC
34-13-01 04	DC

PART NUMBER CH-SECT-UNIT-FIG-ITEM	IDENT
422254-8	
34-13-01 08	DC
73-20-10 03	DC
78-30-05 01	DC
78-30-05 02	DC
422254-9	
21-60-10 08	DH
21-60-10 10	DH
21-60-10 11	DH
24-30-20 02	DH
24-30-20 03	DH
24-50-01 05	DH
24-50-01 06	DH
24-50-01 07	DH
26-10-30 03	DH
26-20-10 03	DH
28-21-05 02	DH
28-21-05 03	DH
28-21-05 04	DH
28-41-10 02	DH
28-41-10 03	DH
30-30-20 02	DH
31-50-05 03	DH
33-50-10 09	DH
49-60-10 05	DH
49-60-30 06	DH
49-60-30 08	DH
49-60-30 09	DH
49-60-30 11	DH
73-20-01 05	DH
73-20-02 05	DH
73-20-10 03	DH
422255-7	
24-21-17 03	DJ
24-21-17 04	DJ
24-50-05 08	DJ
24-50-05 11	DJ
24-50-05 14	DJ
24-50-05 15	DJ
27-00-10 03	DJ
27-00-10 04	DJ
27-33-00 05	DJ
27-33-00 07	DJ
28-40-30 05	DJ
30-40-15 07	DJ
30-40-15 10	DJ
30-40-15 11	DJ
30-40-15 12	DJ
30-40-20 03	DJ
30-40-20 05	DJ
32-60-10 04	DJ

PART NUMBER CH-SECT-UNIT-FIG-ITEM	IDENT
422255-7	
33-30-15 07	DJ
33-40-10 05	DJ
33-40-10 06	DJ
77-20-10 02	DJ
80-10-10 04	DJ
422255-8	
21-30-10 02	DG
21-30-10 04	DG
21-60-10 08	DG
21-60-10 10	DG
21-60-10 11	DG
21-60-20 02	DG
21-60-20 03	DG
24-21-17 03	DG
24-21-17 04	DG
24-30-10 02	DG
24-50-01 05	DG
24-50-01 06	DG
24-50-01 07	DG
26-10-10 03	DG
26-10-30 03	DG
26-20-10 03	DG
27-24-10 02	DG
27-24-10 03	DG
28-40-20 02	DG
28-40-40 02	DG
29-32-10 05	DG
30-20-10 02	DG
30-30-20 02	DG
31-20-35 02	DG
31-20-35 03	DG
31-20-60 02	DG-DA
32-60-10 04	DG
32-60-30 02	DG
32-60-30 03	DG
33-30-05 07	DG
33-30-05 08	DG
33-40-10 05	DG
33-40-10 06	DG
49-60-30 08	DG
49-60-30 09	DG
49-60-30 11	DG
73-20-01 05	DG
73-20-10 03	DG
77-10-10 02	DG
78-30-05 01	DG
78-30-05 02	DG
79-30-10 02	DG
80-10-10 04	DG
422255-9	

PART NUMBER CH-SECT-UNIT-FIG-ITEM	IDENT
422255-9	
24-21-17 03	DH
24-21-17 04	DH
78-30-05 01	DH
78-30-05 02	DH
43TNC50-0-1	
34-30-10 53	CP211
34-30-20 53	CP211
45C3111	
21-20-10 03	YY
21-20-10 03	YY
463TCG11J25-5A	
33-40-10 05	B71-DAD
33-40-10 06	B71-DAD
482-96TCK14-15A	
33-30-15 07	B144-DAD
483-96TCK14-10A	
49-60-30 06	B127-DAD
49-60-30 06	B128-DAD
49-60-30 08	B127-DAD
49-60-30 08	B128-DAD
49-60-30 09	B127-DAD
49-60-30 09	B128-DAD
49-60-30 11	B127-DAD
49-60-30 11	B128-DAD
483-96TCK14-15A	
21-20-10 03	B132-DAD
24-50-05 08	B132-DAD
24-50-05 08	B44-DAD
24-50-05 08	B54-DAD
24-50-05 08	B63-DAD
24-50-05 08	B73-DAD
24-50-05 11	B127-DAD
24-50-05 11	B132-DAD
24-50-05 11	B44-DAD
24-50-05 11	B54-DAD
24-50-05 11	B63-DAD
24-50-05 11	B73-DAD
24-50-05 14	B127-DAD
24-50-05 14	B132-DAD
24-50-05 14	B44-DAD
24-50-05 14	B54-DAD
24-50-05 14	B63-DAD
24-50-05 14	B73-DAD
24-50-05 15	B127-DAD
24-50-05 15	B132-DAD
24-50-05 15	B44-DAD
24-50-05 15	B54-DAD
24-50-05 15	B63-DAD
24-50-05 15	B73-DAD
24-50-07 67	B144-DAD

PART NUMBER CH-SECT-UNIT-FIG-ITEM	IDENT
483-96TCK14-15A	
24-50-07 67	B151-DAD
24-50-07 67	B152-DAD
30-30-31 02	B44-DAD
30-30-31 02	B54-DAD
33-40-15 02	B151-DAD
33-40-15 02	B152-DAD
33-40-20 04	B63-DAD
33-40-20 04	B73-DAD
49-60-30 06	CB2-ZKA
49-60-30 08	CB2-ZKA
49-60-30 09	CB2-ZKA
49-60-30 11	CB2-ZKA
483-96TCK14-20A	
24-50-05 08	B120-DAD
24-50-05 11	B120-DAD
24-50-05 14	B120-DAD
24-50-05 15	B120-DAD
483-96TCK14-25A	
24-50-05 08	B26-DAD
24-50-05 08	B27-DAD
24-50-05 08	B36-DAD
24-50-05 08	B37-DAD
24-50-05 11	B26-DAD
24-50-05 11	B27-DAD
24-50-05 11	B36-DAD
24-50-05 11	B37-DAD
24-50-05 14	B26-DAD
24-50-05 14	B27-DAD
24-50-05 14	B36-DAD
24-50-05 14	B37-DAD
24-50-05 15	B26-DAD
24-50-05 15	B27-DAD
24-50-05 15	B36-DAD
24-50-05 15	B37-DAD
28-21-05 02	B26-DAD
28-21-05 02	B27-DAD
28-21-05 02	B36-DAD
28-21-05 02	B37-DAD
28-21-05 03	B26-DAD
28-21-05 03	B27-DAD
28-21-05 03	B36-DAD
28-21-05 03	B37-DAD
28-21-05 04	B26-DAD
28-21-05 04	B27-DAD
28-21-05 04	B36-DAD
28-21-05 04	B37-DAD
483-96TCK14-7-5 *	
A	
24-50-05 08	B61-DAD
24-50-05 08	B62-DAD

PART NUMBER CH-SECT-UNIT-FIG-ITEM	IDENT
483-96TCK14-7-5 *	
A	
24-50-05 11	B61-DAD
24-50-05 11	B62-DAD
24-50-05 14	B61-DAD
24-50-05 14	B62-DAD
24-50-05 15	B61-DAD
24-50-05 15	B62-DAD
33-40-10 05	B61-DAD
33-40-10 06	B61-DAD
483TCG11J25-1A	
24-50-05 08	B24-DAD
24-50-05 08	B34-DAD
24-50-05 11	B24-DAD
24-50-05 11	B34-DAD
24-50-05 14	B24-DAD
24-50-05 14	B34-DAD
24-50-05 15	B24-DAD
24-50-05 15	B34-DAD
24-53-10 06	B8-DAD
24-53-10 08	B8-DAD
26-10-20 02	B148-DAD
30-80-10 02	B8-DAD
30-80-10 03	B8-DAD
31-50-01 04	B24-DAD
31-50-01 04	B34-DAD
31-50-01 07	B24-DAD
31-50-01 07	B34-DAD
31-50-01 08	B24-DAD
31-50-01 08	B34-DAD
31-50-01 09	B24-DAD
31-50-01 09	B34-DAD
31-50-01 14	B24-DAD
31-50-01 14	B34-DAD
78-30-05 01	B162-DAD
78-30-05 01	B165-DAD
78-30-05 02	B162-DAD
78-30-05 02	B165-DAD
483TCG11J25-2A	
21-30-10 02	B7-DAD
21-30-10 04	B7-DAD
24-50-05 08	B110-DAD
24-50-05 08	B46-DAD
24-50-05 08	B47-DAD
24-50-05 08	B56-DAD
24-50-05 08	B57-DAD
24-50-05 11	B110-DAD
24-50-05 11	B46-DAD
24-50-05 11	B47-DAD
24-50-05 11	B56-DAD
24-50-05 11	B57-DAD

PART NUMBER CH-SECT-UNIT-FIG-ITEM	IDENT
483TCG11J25-2A	
24-50-05 14	B110-DAD
24-50-05 14	B46-DAD
24-50-05 14	B47-DAD
24-50-05 14	B56-DAD
24-50-05 14	B57-DAD
24-50-05 15	B110-DAD
24-50-05 15	B46-DAD
24-50-05 15	B47-DAD
24-50-05 15	B56-DAD
24-50-05 15	B57-DAD
24-53-10 06	B7-DAD
24-53-10 08	B7-DAD
30-10-10 11	B110-DAD
30-40-15 07	B46-DAD
30-40-15 07	B56-DAD
30-40-15 10	B46-DAD
30-40-15 10	B56-DAD
30-40-15 11	B46-DAD
30-40-15 11	B56-DAD
30-40-15 12	B46-DAD
30-40-15 12	B56-DAD
30-40-20 03	B47-DAD
30-40-20 03	B57-DAD
30-40-20 05	B47-DAD
30-40-20 05	B57-DAD
483TCG11J25-3A	
21-31-10 07	B104-DAD
21-60-10 08	B103-DAD
21-60-10 08	B23-DAD
21-60-10 08	B41-DAD
21-60-10 08	B42-DAD
21-60-10 08	B43-DAD
21-60-10 08	B51-DAD
21-60-10 08	B52-DAD
21-60-10 08	B53-DAD
21-60-10 10	B103-DAD
21-60-10 10	B109-DAD
21-60-10 10	B23-DAD
21-60-10 10	B41-DAD
21-60-10 10	B42-DAD
21-60-10 10	B43-DAD
21-60-10 10	B51-DAD
21-60-10 10	B52-DAD
21-60-10 10	B53-DAD
21-60-10 11	B103-DAD
21-60-10 11	B109-DAD
21-60-10 11	B23-DAD
21-60-10 11	B41-DAD
21-60-10 11	B42-DAD
21-60-10 11	B43-DAD

PART NUMBER CH-SECT-UNIT-FIG-ITEM	IDENT
483TCG11J25-3A	
21-60-10 11	B51-DAD
21-60-10 11	B52-DAD
21-60-10 11	B53-DAD
21-60-20 02	B114-DAD
21-60-20 02	B124-DAD
21-60-20 03	B114-DAD
21-60-20 03	B124-DAD
24-50-01 05	B116-DAD
24-50-01 05	B85-DAD
24-50-01 06	B116-DAD
24-50-01 06	B85-DAD
24-50-01 07	B116-DAD
24-50-01 07	B85-DAD
24-50-05 08	B100-DAD
24-50-05 08	B101-DAD
24-50-05 08	B102-DAD
24-50-05 08	B103-DAD
24-50-05 08	B104-DAD
24-50-05 08	B106-DAD
24-50-05 08	B107-DAD
24-50-05 08	B108-DAD
24-50-05 08	B111-DAD
24-50-05 08	B112-DAD
24-50-05 08	B113-DAD
24-50-05 08	B114-DAD
24-50-05 08	B115-DAD
24-50-05 08	B116-DAD
24-50-05 08	B117-DAD
24-50-05 08	B118-DAD
24-50-05 08	B119-DAD
24-50-05 08	B121-DAD
24-50-05 08	B122-DAD
24-50-05 08	B123-DAD
24-50-05 08	B124-DAD
24-50-05 08	B125-DAD
24-50-05 08	B13-DAD
24-50-05 08	B18-DAD
24-50-05 08	B19-DAD
24-50-05 08	B20-DAD
24-50-05 08	B22-DAD
24-50-05 08	B23-DAD
24-50-05 08	B25-DAD
24-50-05 08	B28-DAD
24-50-05 08	B35-DAD
24-50-05 08	B38-DAD
24-50-05 08	B41-DAD
24-50-05 08	B42-DAD
24-50-05 08	B43-DAD
24-50-05 08	B48-DAD
24-50-05 08	B49-DAD

PART NUMBER CH-SECT-UNIT-FIG-ITEM	IDENT
483TCG11J25-3A	
24-50-05 08	B51-DAD
24-50-05 08	B52-DAD
24-50-05 08	B53-DAD
24-50-05 08	B58-DAD
24-50-05 08	B59-DAD
24-50-05 08	B60-DAD
24-50-05 08	B67-DAD
24-50-05 08	B69-DAD
24-50-05 08	B72-DAD
24-50-05 08	B81-DAD
24-50-05 08	B82-DAD
24-50-05 08	B83-DAD
24-50-05 08	B85-DAD
24-50-05 08	B88-DAD
24-50-05 08	B89-DAD
24-50-05 08	B90-DAD
24-50-05 08	B91-DAD
24-50-05 08	B92-DAD
24-50-05 08	B93-DAD
24-50-05 08	B94-DAD
24-50-05 08	B96-DAD
24-50-05 08	B97-DAD
24-50-05 08	B98-DAD
24-50-05 08	B99-DAD
24-50-05 11	B100-DAD
24-50-05 11	B101-DAD
24-50-05 11	B102-DAD
24-50-05 11	B103-DAD
24-50-05 11	B104-DAD
24-50-05 11	B106-DAD
24-50-05 11	B107-DAD
24-50-05 11	B108-DAD
24-50-05 11	B109-DAD
24-50-05 11	B111-DAD
24-50-05 11	B112-DAD
24-50-05 11	B113-DAD
24-50-05 11	B114-DAD
24-50-05 11	B115-DAD
24-50-05 11	B116-DAD
24-50-05 11	B117-DAD
24-50-05 11	B118-DAD
24-50-05 11	B119-DAD
24-50-05 11	B121-DAD
24-50-05 11	B122-DAD
24-50-05 11	B123-DAD
24-50-05 11	B124-DAD
24-50-05 11	B125-DAD
24-50-05 11	B129-DAD
24-50-05 11	B13-DAD
24-50-05 11	B130-DAD

PART NUMBER CH-SECT-UNIT-FIG-ITEM	IDENT
483TCG11J25-3A	
24-50-05 11	B18-DAD
24-50-05 11	B19-DAD
24-50-05 11	B20-DAD
24-50-05 11	B22-DAD
24-50-05 11	B23-DAD
24-50-05 11	B25-DAD
24-50-05 11	B28-DAD
24-50-05 11	B35-DAD
24-50-05 11	B38-DAD
24-50-05 11	B41-DAD
24-50-05 11	B42-DAD
24-50-05 11	B43-DAD
24-50-05 11	B48-DAD
24-50-05 11	B49-DAD
24-50-05 11	B51-DAD
24-50-05 11	B52-DAD
24-50-05 11	B53-DAD
24-50-05 11	B58-DAD
24-50-05 11	B59-DAD
24-50-05 11	B60-DAD
24-50-05 11	B67-DAD
24-50-05 11	B69-DAD
24-50-05 11	B72-DAD
24-50-05 11	B81-DAD
24-50-05 11	B82-DAD
24-50-05 11	B83-DAD
24-50-05 11	B85-DAD
24-50-05 11	B88-DAD
24-50-05 11	B89-DAD
24-50-05 11	B90-DAD
24-50-05 11	B91-DAD
24-50-05 11	B92-DAD
24-50-05 11	B93-DAD
24-50-05 11	B94-DAD
24-50-05 11	B96-DAD
24-50-05 11	B97-DAD
24-50-05 11	B98-DAD
24-50-05 11	B99-DAD
24-50-05 14	B100-DAD
24-50-05 14	B101-DAD
24-50-05 14	B102-DAD
24-50-05 14	B103-DAD
24-50-05 14	B104-DAD
24-50-05 14	B106-DAD
24-50-05 14	B107-DAD
24-50-05 14	B108-DAD
24-50-05 14	B109-DAD
24-50-05 14	B111-DAD
24-50-05 14	B112-DAD
24-50-05 14	B113-DAD

PART NUMBER CH-SECT-UNIT-FIG-ITEM	IDENT
483TCG11J25-3A	
24-50-05 14	B114-DAD
24-50-05 14	B115-DAD
24-50-05 14	B116-DAD
24-50-05 14	B117-DAD
24-50-05 14	B118-DAD
24-50-05 14	B119-DAD
24-50-05 14	B121-DAD
24-50-05 14	B122-DAD
24-50-05 14	B123-DAD
24-50-05 14	B124-DAD
24-50-05 14	B125-DAD
24-50-05 14	B129-DAD
24-50-05 14	B13-DAD
24-50-05 14	B130-DAD
24-50-05 14	B18-DAD
24-50-05 14	B19-DAD
24-50-05 14	B20-DAD
24-50-05 14	B22-DAD
24-50-05 14	B23-DAD
24-50-05 14	B25-DAD
24-50-05 14	B28-DAD
24-50-05 14	B35-DAD
24-50-05 14	B38-DAD
24-50-05 14	B41-DAD
24-50-05 14	B42-DAD
24-50-05 14	B43-DAD
24-50-05 14	B48-DAD
24-50-05 14	B49-DAD
24-50-05 14	B51-DAD
24-50-05 14	B52-DAD
24-50-05 14	B53-DAD
24-50-05 14	B58-DAD
24-50-05 14	B59-DAD
24-50-05 14	B60-DAD
24-50-05 14	B67-DAD
24-50-05 14	B69-DAD
24-50-05 14	B72-DAD
24-50-05 14	B81-DAD
24-50-05 14	B82-DAD
24-50-05 14	B83-DAD
24-50-05 14	B85-DAD
24-50-05 14	B88-DAD
24-50-05 14	B89-DAD
24-50-05 14	B90-DAD
24-50-05 14	B91-DAD
24-50-05 14	B92-DAD
24-50-05 14	B93-DAD
24-50-05 14	B94-DAD
24-50-05 14	B96-DAD
24-50-05 14	B97-DAD

PART NUMBER CH-SECT-UNIT-FIG-ITEM	IDENT
483TCG11J25-3A	
24-50-05 14	B98-DAD
24-50-05 14	B99-DAD
24-50-05 15	B100-DAD
24-50-05 15	B101-DAD
24-50-05 15	B102-DAD
24-50-05 15	B103-DAD
24-50-05 15	B104-DAD
24-50-05 15	B106-DAD
24-50-05 15	B107-DAD
24-50-05 15	B108-DAD
24-50-05 15	B109-DAD
24-50-05 15	B111-DAD
24-50-05 15	B112-DAD
24-50-05 15	B113-DAD
24-50-05 15	B114-DAD
24-50-05 15	B115-DAD
24-50-05 15	B116-DAD
24-50-05 15	B117-DAD
24-50-05 15	B118-DAD
24-50-05 15	B119-DAD
24-50-05 15	B121-DAD
24-50-05 15	B122-DAD
24-50-05 15	B123-DAD
24-50-05 15	B124-DAD
24-50-05 15	B125-DAD
24-50-05 15	B129-DAD
24-50-05 15	B13-DAD
24-50-05 15	B130-DAD
24-50-05 15	B18-DAD
24-50-05 15	B19-DAD
24-50-05 15	B20-DAD
24-50-05 15	B22-DAD
24-50-05 15	B23-DAD
24-50-05 15	B25-DAD
24-50-05 15	B28-DAD
24-50-05 15	B35-DAD
24-50-05 15	B38-DAD
24-50-05 15	B41-DAD
24-50-05 15	B42-DAD
24-50-05 15	B43-DAD
24-50-05 15	B48-DAD
24-50-05 15	B49-DAD
24-50-05 15	B51-DAD
24-50-05 15	B52-DAD
24-50-05 15	B53-DAD
24-50-05 15	B58-DAD
24-50-05 15	B59-DAD
24-50-05 15	B60-DAD
24-50-05 15	B67-DAD
24-50-05 15	B69-DAD

PART NUMBER CH-SECT-UNIT-FIG-ITEM	IDENT
483TCG11J25-3A	
24-50-05 15	B72-DAD
24-50-05 15	B81-DAD
24-50-05 15	B82-DAD
24-50-05 15	B83-DAD
24-50-05 15	B85-DAD
24-50-05 15	B88-DAD
24-50-05 15	B89-DAD
24-50-05 15	B90-DAD
24-50-05 15	B91-DAD
24-50-05 15	B92-DAD
24-50-05 15	B93-DAD
24-50-05 15	B94-DAD
24-50-05 15	B96-DAD
24-50-05 15	B97-DAD
24-50-05 15	B98-DAD
24-50-05 15	B99-DAD
24-53-10 06	B1-DAD
24-53-10 06	B11-DAD
24-53-10 06	B12-DAD
24-53-10 06	B2-DAD
24-53-10 06	B3-DAD
24-53-10 06	B5-DAD
24-53-10 06	B6-DAD
24-53-10 08	B1-DAD
24-53-10 08	B11-DAD
24-53-10 08	B12-DAD
26-10-10 03	B22-DAD
27-24-10 02	B100-DAD
27-24-10 02	B48-DAD
27-24-10 02	B49-DAD
27-24-10 02	B58-DAD
27-24-10 02	B59-DAD
27-24-10 03	B100-DAD
27-24-10 03	B49-DAD
27-24-10 03	B59-DAD
27-50-10 02	B117-DAD
28-21-05 02	B28-DAD
28-21-05 02	B38-DAD
28-21-05 03	B28-DAD
28-21-05 03	B38-DAD
28-21-05 04	B28-DAD
28-21-05 04	B38-DAD
28-40-10 04	B111-DAD
28-40-10 04	B121-DAD
28-40-10 05	B111-DAD
28-40-10 05	B121-DAD
28-41-10 02	B25-DAD
28-41-10 02	B90-DAD
28-41-10 03	B25-DAD
28-41-10 03	B90-DAD

PART NUMBER CH-SECT-UNIT-FIG-ITEM	IDENT
483TCG11J25-3A	
28-41-20 03	B35-DAD
28-41-20 03	B88-DAD
28-41-20 03	B90-DAD
28-42-10 02	B89-DAD
29-31-10 02	B106-DAD
29-32-10 05	B108-DAD
29-32-10 05	B115-DAD
29-32-10 05	B98-DAD
30-10-10 11	B118-DAD
30-80-10 02	B101-DAD
30-80-10 03	B101-DAD
31-20-35 02	B119-DAD
31-20-35 03	B119-DAD
31-20-60 02	B107-DAD
31-20-60 02	B125-DAD
31-20-60 02	B97-DAD
32-60-10 04	B102-DAD
32-60-10 04	B91-DAD
32-60-10 04	B92-DAD
32-60-10 04	B94-DAD
32-60-20 02	B93-DAD
32-60-30 02	B60-DAD
32-60-30 03	B60-DAD
33-10-05 05	B6-DAD
33-10-05 05	B67-DAD
33-10-05 05	B69-DAD
33-10-05 07	B6-DAD
33-10-05 07	B67-DAD
33-10-05 07	B69-DAD
33-10-05 08	B6-DAD
33-10-05 08	B67-DAD
33-10-05 08	B69-DAD
33-10-05 09	B6-DAD
33-10-05 09	B67-DAD
33-10-05 09	B69-DAD
33-10-05 11	B67-DAD
33-10-05 11	B69-DAD
33-10-20 04	B2-DAD
33-10-20 04	B3-DAD
33-10-20 04	B5-DAD
33-10-20 07	B2-DAD
33-10-20 07	B3-DAD
33-10-20 07	B5-DAD
33-20-10 10	B143-DAD
33-40-30 03	B72-DAD
34-13-01 04	B18-DAD
34-13-01 04	B91-DAD
34-13-01 04	B96-DAD
34-13-01 08	B18-DAD
34-13-01 08	B91-DAD

PART NUMBER CH-SECT-UNIT-FIG-ITEM	IDENT
483TCG11J25-3A	
34-13-01 08	B96-DAD
52-70-10 02	B99-DAD
78-30-05 02	B163-DAD
78-30-05 02	B166-DAD
79-30-10 02	B112-DAD
79-30-10 02	B113-DAD
79-30-10 02	B122-DAD
79-30-10 02	B123-DAD
483TCG11J25-5A	
21-20-10 03	B131-DAD
24-50-05 08	B131-DAD
24-50-05 08	B14-DAD
24-50-05 08	B15-DAD
24-50-05 08	B16-DAD
24-50-05 08	B17-DAD
24-50-05 08	B21-DAD
24-50-05 08	B30-DAD
24-50-05 08	B31-DAD
24-50-05 08	B33-DAD
24-50-05 08	B40-DAD
24-50-05 08	B45-DAD
24-50-05 08	B50-DAD
24-50-05 08	B55-DAD
24-50-05 08	B64-DAD
24-50-05 08	B66-DAD
24-50-05 08	B68-DAD
24-50-05 08	B71-DAD
24-50-05 08	B74-DAD
24-50-05 08	B76-DAD
24-50-05 08	B77-DAD
24-50-05 08	B78-DAD
24-50-05 08	B86-DAD
24-50-05 08	B87-DAD
24-50-05 11	B128-DAD
24-50-05 11	B131-DAD
24-50-05 11	B14-DAD
24-50-05 11	B15-DAD
24-50-05 11	B16-DAD
24-50-05 11	B17-DAD
24-50-05 11	B21-DAD
24-50-05 11	B30-DAD
24-50-05 11	B31-DAD
24-50-05 11	B33-DAD
24-50-05 11	B40-DAD
24-50-05 11	B45-DAD
24-50-05 11	B50-DAD
24-50-05 11	B55-DAD
24-50-05 11	B64-DAD
24-50-05 11	B66-DAD
24-50-05 11	B68-DAD

PART NUMBER CH-SECT-UNIT-FIG-ITEM	IDENT
483TCG11J25-5A	
24-50-05 11	B71-DAD
24-50-05 11	B74-DAD
24-50-05 11	B76-DAD
24-50-05 11	B77-DAD
24-50-05 11	B78-DAD
24-50-05 11	B86-DAD
24-50-05 11	B87-DAD
24-50-05 14	B128-DAD
24-50-05 14	B131-DAD
24-50-05 14	B14-DAD
24-50-05 14	B15-DAD
24-50-05 14	B16-DAD
24-50-05 14	B17-DAD
24-50-05 14	B21-DAD
24-50-05 14	B30-DAD
24-50-05 14	B31-DAD
24-50-05 14	B33-DAD
24-50-05 14	B40-DAD
24-50-05 14	B45-DAD
24-50-05 14	B50-DAD
24-50-05 14	B55-DAD
24-50-05 14	B64-DAD
24-50-05 14	B66-DAD
24-50-05 14	B68-DAD
24-50-05 14	B71-DAD
24-50-05 14	B74-DAD
24-50-05 14	B76-DAD
24-50-05 14	B77-DAD
24-50-05 14	B78-DAD
24-50-05 14	B86-DAD
24-50-05 14	B87-DAD
24-50-05 15	B128-DAD
24-50-05 15	B131-DAD
24-50-05 15	B14-DAD
24-50-05 15	B15-DAD
24-50-05 15	B16-DAD
24-50-05 15	B17-DAD
24-50-05 15	B2-DAD
24-50-05 15	B21-DAD
24-50-05 15	B3-DAD
24-50-05 15	B30-DAD
24-50-05 15	B31-DAD
24-50-05 15	B33-DAD
24-50-05 15	B40-DAD
24-50-05 15	B45-DAD
24-50-05 15	B5-DAD
24-50-05 15	B50-DAD
24-50-05 15	B55-DAD
24-50-05 15	B6-DAD
24-50-05 15	B64-DAD

PART NUMBER CH-SECT-UNIT-FIG-ITEM	IDENT
483TCG11J25-5A	
24-50-05 15	B66-DAD
24-50-05 15	B68-DAD
24-50-05 15	B71-DAD
24-50-05 15	B74-DAD
24-50-05 15	B76-DAD
24-50-05 15	B77-DAD
24-50-05 15	B78-DAD
24-50-05 15	B86-DAD
24-50-05 15	B87-DAD
26-20-10 03	B21-DAD
26-20-10 03	B31-DAD
27-24-10 03	B48-DAD
27-24-10 03	B58-DAD
30-10-10 11	B50-DAD
30-20-10 02	B30-DAD
30-20-10 02	B40-DAD
30-30-10 02	B45-DAD
30-30-10 02	B55-DAD
30-30-20 02	B3-XZ
30-30-20 02	B4-XZ
30-30-20 02	B5-XZ
30-30-20 02	B6-XZ
31-50-01 04	B33-DAD
31-50-01 07	B33-DAD
31-50-01 08	B33-DAD
31-50-01 09	B33-DAD
31-50-01 14	B33-DAD
33-10-05 05	B66-DAD
33-10-05 05	B68-DAD
33-10-05 05	B76-DAD
33-10-05 05	B78-DAD
33-10-05 07	B66-DAD
33-10-05 07	B68-DAD
33-10-05 07	B76-DAD
33-10-05 07	B78-DAD
33-10-05 08	B66-DAD
33-10-05 08	B68-DAD
33-10-05 08	B76-DAD
33-10-05 08	B78-DAD
33-10-05 09	B66-DAD
33-10-05 09	B68-DAD
33-10-05 09	B76-DAD
33-10-05 09	B78-DAD
33-10-05 11	B6-DAD
33-10-05 11	B68-DAD
33-10-05 11	B76-DAD
33-10-05 11	B78-DAD
33-10-20 04	B77-DAD
33-10-20 04	B86-DAD
33-10-20 04	B87-DAD

PART NUMBER CH-SECT-UNIT-FIG-ITEM	IDENT
483TCG11J25-5A	
33-10-20 07	B77-DAD
33-10-20 07	B86-DAD
33-10-20 07	B87-DAD
33-10-20 08	B2-DAD
33-10-20 08	B3-DAD
33-10-20 08	B5-DAD
33-10-20 08	B77-DAD
33-10-20 08	B86-DAD
33-10-20 08	B87-DAD
33-40-20 04	B64-DAD
33-40-20 04	B74-DAD
78-30-05 01	B161-DAD
78-30-05 01	B163-DAD
78-30-05 01	B164-DAD
78-30-05 01	B166-DAD
78-30-05 02	B161-DAD
78-30-05 02	B164-DAD
483TCG11J5-3A	
24-21-17 03	B1-DAD
24-21-17 03	B19-DAD
24-21-17 03	B81-DAD
24-21-17 03	B82-DAD
24-21-17 03	B83-DAD
24-21-17 04	B1-DAD
24-21-17 04	B19-DAD
24-21-17 04	B81-DAD
24-21-17 04	B82-DAD
24-21-17 04	B83-DAD
27-30-10 07	B20-DAD
27-30-10 08	B20-DAD
49-60-30 06	CB1-ZKA
49-60-30 08	CB1-ZKA
49-60-30 09	CB1-ZKA
49-60-30 11	CB1-ZKA
483TCG11J5-5A	
24-50-05 08	B4-ZK
24-50-05 11	B4-ZK
24-50-05 14	B4-ZK
24-50-05 15	B4-ZK
80-10-10 04	B4-GA
483TCG11J85-3A	
27-33-00 05	B11-DAD
27-33-00 05	B12-DAD
27-33-00 05	B13-DAD
27-33-00 07	B11-DAD
27-33-00 07	B12-DAD
27-33-00 07	B13-DAD
483TCG11J85-5A	
27-33-00 05	B14-DAD
27-33-00 05	B15-DAD

PART NUMBER CH-SECT-UNIT-FIG-ITEM	IDENT
483TCG11J85-5A	
27-33-00 05	B16-DAD
27-33-00 05	B17-DAD
27-33-00 07	B14-DAD
27-33-00 07	B15-DAD
27-33-00 07	B16-DAD
27-33-00 07	B17-DAD
501-1235-01	
24-21-17 03	TM
24-21-17 03	TN
5100-108-120	
77-20-10 02	V-CC-R
77-20-10 02	W-CC-R
5100-108-220	
77-20-10 02	V-CC-R
77-20-10 02	W-CC-R
512TS1-1	
33-10-05 05	Y
33-10-05 05	Z
33-10-05 07	Y
33-10-05 07	Z
33-10-05 08	Y
33-10-05 08	Z
33-10-05 09	Y
33-10-05 09	Z
33-10-05 11	Y
33-10-05 11	Z
51509-006C	
24-30-10 02	A-XZ
24-30-20 02	C-XZ
24-30-20 03	C-XZ
49-60-10 05	Y-ZKA
49-60-30 06	Z2
49-60-30 08	Z2
49-60-30 09	Z2
49-60-30 11	Z2
51539-006H	
24-30-10 02	A-XZ
24-30-20 02	C-XZ
24-30-20 03	C-XZ
49-60-10 05	Y-ZKA
49-60-30 06	Z2
49-60-30 08	Z2
49-60-30 09	Z2
49-60-30 11	Z2
5400612-1	
78-30-05 02	P801A
78-30-05 02	P801B
5400619-1	
78-30-05 02	P802
5412600-1	

PART NUMBER CH-SECT-UNIT-FIG-ITEM	IDENT
5412600-1	
78-30-05 02	P804
548408-1	
21-60-10 08	UT
21-60-10 10	UT
21-60-10 11	UT
569206	
28-40-40 02	P16-M1
28-40-40 02	P16-M2
571-4101-01-05- * 19	
31-50-05 03	G-WX
583-96TCK14-10A	
24-30-10 02	B1-ZK
24-30-20 02	B2-ZK
24-30-20 03	B3-ZK
24-50-05 08	B1-GG
24-50-05 08	B1-ZK
24-50-05 08	B2-GG
24-50-05 08	B2-ZK
24-50-05 11	B1-GG
24-50-05 11	B1-ZK
24-50-05 11	B2-GG
24-50-05 11	B2-ZK
24-50-05 14	B1-GG
24-50-05 14	B1-ZK
24-50-05 14	B2-GG
24-50-05 14	B2-ZK
24-50-05 15	B1-GG
24-50-05 15	B1-ZK
24-50-05 15	B2-GG
24-50-05 15	B2-ZK
30-40-15 07	B1-GG
30-40-15 07	B171-DAD
30-40-15 07	B172-DAD
30-40-15 07	B2-GG
30-40-15 10	B1-GG
30-40-15 10	B2-GG
30-40-15 11	B1-GG
30-40-15 11	B2-GG
30-40-15 12	B1-GG
30-40-15 12	B2-GG
583-96TCK14-3A	
30-40-20 03	B3-GG
30-40-20 03	B4-GG
30-40-20 05	B3-GG
30-40-20 05	B4-GG
5905-99-0135622	
33-10-05 05	S-DAE
33-10-05 05	T-DAE
33-10-05 05	V-DAE

PART NUMBER CH-SECT-UNIT-FIG-ITEM	IDENT
5905-99-0135622	
33-10-05 05	W-DAE
33-10-05 05	X-DAE
33-10-05 07	S-DAE
33-10-05 07	T-DAE
33-10-05 07	V-DAE
33-10-05 07	W-DAE
33-10-05 07	X-DAE
33-10-05 08	S-DAE
33-10-05 08	T-DAE
33-10-05 08	V-DAE
33-10-05 08	W-DAE
33-10-05 08	X-DAE
33-10-05 09	S-DAE
33-10-05 09	T-DAE
33-10-05 09	V-DAE
33-10-05 09	W-DAE
33-10-05 09	X-DAE
33-10-05 11	S-DAE
33-10-05 11	T-DAE
33-10-05 11	V-DAE
33-10-05 11	W-DAE
33-10-05 11	X-DAE
33-10-20 04	S-DAE
33-10-20 04	T-DAE
33-10-20 04	U-DAE
33-10-20 07	S-DAE
33-10-20 07	T-DAE
33-10-20 07	U-DAE
33-10-20 08	S-DAE
33-10-20 08	T-DAE
33-10-20 08	U-DAE
5905-99-0135626	
33-10-05 05	S-DAE
33-10-05 05	T-DAE
33-10-05 05	V-DAE
33-10-05 05	W-DAE
33-10-05 05	X-DAE
33-10-05 07	S-DAE
33-10-05 07	T-DAE
33-10-05 07	V-DAE
33-10-05 07	W-DAE
33-10-05 07	X-DAE
33-10-05 08	S-DAE
33-10-05 08	T-DAE
33-10-05 08	V-DAE
33-10-05 08	W-DAE
33-10-05 08	X-DAE
33-10-05 09	S-DAE
33-10-05 09	T-DAE
33-10-05 09	V-DAE

PART NUMBER CH-SECT-UNIT-FIG-ITEM	IDENT
5905-99-0135626	
33-10-05 09	W-DAE
33-10-05 09	X-DAE
33-10-05 11	S-DAE
33-10-05 11	T-DAE
33-10-05 11	V-DAE
33-10-05 11	W-DAE
33-10-05 11	X-DAE
33-10-20 04	S-DAE
33-10-20 04	T-DAE
33-10-20 04	Y-DAE
33-10-20 04	Y-DAE
33-10-20 07	S-DAE
33-10-20 07	T-DAE
33-10-20 07	Y-DAE
33-10-20 08	S-DAE
33-10-20 08	T-DAE
33-10-20 08	Y-DAE
33-10-20 08	Y-DAE
5905-99-0135638	
33-10-20 04	Y-DAE
33-10-20 07	Y-DAE
33-10-20 08	Y-DAE
5905-99-0135647	
33-10-20 04	Y-DAE
33-10-20 07	Y-DAE
33-10-20 08	Y-DAE
5905-99-0135666	
33-10-20 04	Y-DAE
33-10-20 04	Y-DAE
33-10-20 07	Y-DAE
33-10-20 07	Y-DAE
33-10-20 08	Y-DAE
33-10-20 08	Y-DAE
5905-99-0135777	
30-10-10 11	RB-DAJ
5905-99-0135979	
33-10-05 05	J-AB
33-10-05 07	J-AB
33-10-20 04	J-AA
33-10-20 04	K-AA
33-10-20 04	K-AB
5905-99-0140302	
24-50-01 05	RD-DAB
24-50-01 06	RD-DAB
24-50-01 07	RD-DAB
5905-99-0140445	
24-50-01 05	RC-DAB
24-50-01 06	RC-DAB
24-50-01 07	RC-DAB
5905-99-0140575	

	PART NUMBER CH-SECT-UNIT-FIG-ITEM	IDENT
	5905-99-0140575	
	21-31-10 07	RA-DAJ
	5909-99-0135626	
	33-10-20 07	Y-DAE
	5910-99-0115572	
	32-60-10 04	B-PQ
	5910-99-0124909	
	49-60-10 05	M-ZKA
	5910-99-0124911	
	31-50-01 04	EF-DAJ
	31-50-01 04	EG-DAJ
	31-50-01 07	EF-DAJ
	31-50-01 07	EG-DAJ
	31-50-01 08	EF-DAJ
	31-50-01 08	EG-DAJ
	31-50-01 09	EF-DAJ
	31-50-01 09	EG-DAJ
	31-50-01 14	EF-DAJ
	31-50-01 14	EG-DAJ
	34-13-01 04	EH-DAJ
	34-13-01 08	EH-DAJ
	5910-99-0130515	
	30-10-10 11	EL-DAJ
	591818-1	
R	30-40-20 03	M8-DAG
R	30-40-20 05	M8-DAG
R	32-60-10 04	Y8-DAB
	5920-00-0120075	
	24-21-17 03	F22-ZK
	24-21-17 03	F30-ZK
	24-21-17 03	F38-ZK
	24-21-17 03	F39-ZK
	24-21-17 04	F22-ZK
	24-21-17 04	F30-ZK
	24-21-17 04	F38-ZK
	24-21-17 04	F39-ZK
	5920-99-0120072	
	23-31-20 52	FH627-1
	5920-99-0120073	
	24-21-17 03	F22-DAC
	24-21-17 03	F23-DAC
	24-21-17 03	F24-DAC
	24-21-17 04	F22-DAC
	24-21-17 04	F23-DAC
	24-21-17 04	F24-DAC
	24-53-10 06	F21-DAC
	24-53-10 06	F22-DAC
	24-53-10 06	F23-DAC
	24-53-10 06	F24-DAC
	24-53-10 08	F21-DAC
	24-53-10 08	F22-DAC

	PART NUMBER CH-SECT-UNIT-FIG-ITEM	IDENT
	5920-99-0120073	
	24-53-10 08	F23-DAC
	24-53-10 08	F24-DAC
	27-33-00 05	F21-DAC
	27-33-00 07	F21-DAC
	27-61-20 04	F13-DAC
	33-30-15 07	F28-DAC
	5920-99-0120074	
	23-31-20 52	FH627-1
	24-50-01 05	F15-ZL
	24-50-01 06	F15-ZL
	24-50-01 07	F15-ZL
	24-50-05 08	F1-GG
	24-50-05 08	F10-GG
	24-50-05 08	F15-ZL
	24-50-05 08	F16-DAC
	24-50-05 08	F2-GG
	24-50-05 08	F3-GG
	24-50-05 08	F68-ZK
	24-50-05 08	F69-ZK
	24-50-05 08	F8-GG
	24-50-05 08	F9-GG
	24-50-05 11	F1-GG
	24-50-05 11	F10-GG
	24-50-05 11	F15-ZL
	24-50-05 11	F16-DAC
	24-50-05 11	F2-GG
	24-50-05 11	F3-GG
	24-50-05 11	F68-ZK
	24-50-05 11	F69-ZK
	24-50-05 11	F8-GG
	24-50-05 11	F9-GG
	24-50-05 14	F1-GG
	24-50-05 14	F10-GG
	24-50-05 14	F15-ZL
	24-50-05 14	F16-DAC
	24-50-05 14	F2-GG
	24-50-05 14	F3-GG
	24-50-05 14	F68-ZK
	24-50-05 14	F69-ZK
	24-50-05 14	F8-GG
	24-50-05 14	F9-GG
	24-50-05 15	F1-GG
	24-50-05 15	F10-GG
	24-50-05 15	F15-ZL
	24-50-05 15	F16-DAC
	24-50-05 15	F2-GG
	24-50-05 15	F3-GG
	24-50-05 15	F68-ZK
	24-50-05 15	F69-ZK
	24-50-05 15	F8-GG

PART NUMBER CH-SECT-UNIT-FIG-ITEM	IDENT
5920-99-0120074	
24-50-05 15	F9-GG
27-33-00 05	F16-DAC
27-33-00 07	F16-DAC
30-40-15 07	F1-GG
30-40-15 07	F10-GG
30-40-15 07	F2-GG
30-40-15 07	F3-GG
30-40-15 07	F68-ZK
30-40-15 07	F69-ZK
30-40-15 07	F8-GG
30-40-15 07	F9-GG
30-40-15 10	F1-GG
30-40-15 10	F10-GG
30-40-15 10	F2-GG
30-40-15 10	F3-GG
30-40-15 10	F68-ZK
30-40-15 10	F69-ZK
30-40-15 10	F8-GG
30-40-15 10	F9-GG
30-40-15 11	F1-GG
30-40-15 11	F10-GG
30-40-15 11	F2-GG
30-40-15 11	F3-GG
30-40-15 11	F68-ZK
30-40-15 11	F69-ZK
30-40-15 11	F8-GG
30-40-15 11	F9-GG
30-40-15 12	F1-GG
30-40-15 12	F10-GG
30-40-15 12	F2-GG
30-40-15 12	F3-GG
30-40-15 12	F68-ZK
30-40-15 12	F69-ZK
30-40-15 12	F8-GG
30-40-15 12	F9-GG
5920-99-0120075	
24-21-17 03	F3-XZ
24-21-17 03	F4-XZ
24-21-17 04	F3-XZ
24-21-17 04	F4-XZ
24-30-10 02	F1-XZ
24-30-10 02	F10-ZL
24-30-10 02	F15-GA
24-30-10 02	F16-GA
24-30-10 02	F17-GA
24-30-10 02	F28-GA
24-30-10 02	F32-ZK
24-30-10 02	F60-ZK
24-30-20 02	F2-XZ
24-30-20 02	F25-GA

PART NUMBER CH-SECT-UNIT-FIG-ITEM	IDENT
5920-99-0120075	
24-30-20 02	F26-GA
24-30-20 02	F27-GA
24-30-20 02	F30-GA
24-30-20 02	F33-ZK
24-30-20 02	F70-ZK
24-30-20 02	F9-ZL
24-30-20 03	F2-XZ
24-30-20 03	F25-GA
24-30-20 03	F26-GA
24-30-20 03	F27-GA
24-30-20 03	F30-GA
24-30-20 03	F33-ZK
24-30-20 03	F70-ZK
24-30-20 03	F9-ZL
24-50-01 05	F10-ZL
24-50-01 05	F11-DAC
24-50-01 05	F16-GA
24-50-01 05	F18-ZL
24-50-01 05	F19-ZL
24-50-01 05	F20-ZL
24-50-01 05	F21-ZL
24-50-01 05	F25-ZL
24-50-01 05	F26-GA
24-50-01 05	F30-ZL
24-50-01 05	F33-ZL
24-50-01 05	F34-ZL
24-50-01 05	F35-ZL
24-50-01 05	F36-ZL
24-50-01 05	F4-ZL
24-50-01 05	F55-ZK
24-50-01 05	F59-ZK
24-50-01 05	F8-ZL
24-50-01 05	F9-ZL
24-50-01 06	F10-ZL
24-50-01 06	F11-DAC
24-50-01 06	F16-GA
24-50-01 06	F21-ZL
24-50-01 06	F25-ZL
24-50-01 06	F26-GA
24-50-01 06	F30-ZL
24-50-01 06	F33-ZL
24-50-01 06	F34-ZL
24-50-01 06	F35-ZL
24-50-01 06	F36-ZL
24-50-01 06	F4-ZL
24-50-01 06	F55-ZK
24-50-01 06	F59-ZK
24-50-01 06	F8-ZL
24-50-01 06	F9-ZL
24-50-01 07	F10-ZL

PART NUMBER CH-SECT-UNIT-FIG-ITEM	IDENT
5920-99-0120075	
24-50-01 07	F11-DAC
24-50-01 07	F16-GA
24-50-01 07	F21-ZL
24-50-01 07	F25-ZL
24-50-01 07	F26-GA
24-50-01 07	F30-ZL
24-50-01 07	F33-ZL
24-50-01 07	F34-ZL
24-50-01 07	F35-ZL
24-50-01 07	F36-ZL
24-50-01 07	F4-ZL
24-50-01 07	F55-ZK
24-50-01 07	F59-ZK
24-50-01 07	F8-ZL
24-50-01 07	F9-ZL
24-50-05 08	F1-ZK
24-50-05 08	F10-ZK
24-50-05 08	F10-ZL
24-50-05 08	F11-DAC
24-50-05 08	F11-ZL
24-50-05 08	F12-DAC
24-50-05 08	F12-ZL
24-50-05 08	F13-ZK
24-50-05 08	F13-ZL
24-50-05 08	F14-ZK
24-50-05 08	F14-ZL
24-50-05 08	F15-DAC
24-50-05 08	F15-GA
24-50-05 08	F15-ZK
24-50-05 08	F16-GA
24-50-05 08	F16-ZK
24-50-05 08	F16-ZL
24-50-05 08	F17-GA
24-50-05 08	F17-ZK
24-50-05 08	F17-ZL
24-50-05 08	F18-ZK
24-50-05 08	F18-ZL
24-50-05 08	F19-DAC
24-50-05 08	F19-ZK
24-50-05 08	F19-ZL
24-50-05 08	F2-DAC
24-50-05 08	F2-ZK
24-50-05 08	F20-ZL
24-50-05 08	F22-ZK
24-50-05 08	F24-ZL
24-50-05 08	F25-GA
24-50-05 08	F25-ZL
24-50-05 08	F26-GA
24-50-05 08	F26-ZL
24-50-05 08	F27-GA

PART NUMBER CH-SECT-UNIT-FIG-ITEM	IDENT
5920-99-0120075	
24-50-05 08	F27-ZL
24-50-05 08	F28-GA
24-50-05 08	F28-ZL
24-50-05 08	F3-DAC
24-50-05 08	F3-ZL
24-50-05 08	F30-GA
24-50-05 08	F30-ZK
24-50-05 08	F30-ZL
24-50-05 08	F31-ZK
24-50-05 08	F32-ZK
24-50-05 08	F33-ZK
24-50-05 08	F33-ZL
24-50-05 08	F34-ZK
24-50-05 08	F34-ZL
24-50-05 08	F35-ZK
24-50-05 08	F35-ZL
24-50-05 08	F36-ZK
24-50-05 08	F36-ZL
24-50-05 08	F37-ZK
24-50-05 08	F38-ZK
24-50-05 08	F39-ZK
24-50-05 08	F4-DAC
24-50-05 08	F4-ZL
24-50-05 08	F40-ZK
24-50-05 08	F41-ZK
24-50-05 08	F42-ZK
24-50-05 08	F46-ZK
24-50-05 08	F47-ZK
24-50-05 08	F48-ZK
24-50-05 08	F5-DAC
24-50-05 08	F50-ZK
24-50-05 08	F51-ZK
24-50-05 08	F52-ZK
24-50-05 08	F53-ZK
24-50-05 08	F54-ZK
24-50-05 08	F55-ZK
24-50-05 08	F56-ZK
24-50-05 08	F57-ZK
24-50-05 08	F58-ZK
24-50-05 08	F59-ZK
24-50-05 08	F6-DAC
24-50-05 08	F6-ZK
24-50-05 08	F60-ZK
24-50-05 08	F61-ZK
24-50-05 08	F62-ZK
24-50-05 08	F63-ZK
24-50-05 08	F64-ZK
24-50-05 08	F65-ZK
24-50-05 08	F66-ZK
24-50-05 08	F7-DAC

PART NUMBER CH-SECT-UNIT-FIG-ITEM	IDENT
5920-99-0120075	
24-50-05 08	F7-ZK
24-50-05 08	F70-ZK
24-50-05 08	F8-DAC
24-50-05 08	F8-ZK
24-50-05 08	F8-ZL
24-50-05 08	F9-ZL
24-50-05 11	F1-XZ
24-50-05 11	F1-ZK
24-50-05 11	F10-ZK
24-50-05 11	F10-ZKA
24-50-05 11	F10-ZL
24-50-05 11	F11-DAC
24-50-05 11	F11-ZL
24-50-05 11	F12-DAC
24-50-05 11	F12-ZL
24-50-05 11	F13-DAC
24-50-05 11	F13-ZK
24-50-05 11	F13-ZL
24-50-05 11	F14-ZK
24-50-05 11	F14-ZL
24-50-05 11	F15-DAC
24-50-05 11	F15-GA
24-50-05 11	F15-ZK
24-50-05 11	F16-GA
24-50-05 11	F16-ZK
24-50-05 11	F16-ZL
24-50-05 11	F17-GA
24-50-05 11	F17-ZK
24-50-05 11	F17-ZL
24-50-05 11	F18-ZK
24-50-05 11	F18-ZL
24-50-05 11	F19-DAC
24-50-05 11	F19-ZK
24-50-05 11	F19-ZL
24-50-05 11	F2-DAC
24-50-05 11	F2-XZ
24-50-05 11	F2-ZK
24-50-05 11	F20-ZL
24-50-05 11	F21-ZK
24-50-05 11	F22-ZK
24-50-05 11	F24-ZL
24-50-05 11	F25-GA
24-50-05 11	F25-ZL
24-50-05 11	F26-GA
24-50-05 11	F26-ZL
24-50-05 11	F27-GA
24-50-05 11	F27-ZK
24-50-05 11	F27-ZL
24-50-05 11	F28-GA
24-50-05 11	F28-ZL

PART NUMBER CH-SECT-UNIT-FIG-ITEM	IDENT
5920-99-0120075	
24-50-05 11	F29-ZK
24-50-05 11	F3-DAC
24-50-05 11	F3-GA
24-50-05 11	F3-XZ
24-50-05 11	F3-ZKA
24-50-05 11	F3-ZL
24-50-05 11	F30-GA
24-50-05 11	F30-ZK
24-50-05 11	F30-ZL
24-50-05 11	F31-ZK
24-50-05 11	F32-ZK
24-50-05 11	F33-ZK
24-50-05 11	F33-ZL
24-50-05 11	F34-ZK
24-50-05 11	F34-ZL
24-50-05 11	F35-ZK
24-50-05 11	F35-ZL
24-50-05 11	F36-ZK
24-50-05 11	F36-ZL
24-50-05 11	F37-ZK
24-50-05 11	F38-ZK
24-50-05 11	F39-ZK
24-50-05 11	F4-DAC
24-50-05 11	F4-GA
24-50-05 11	F4-XZ
24-50-05 11	F4-ZL
24-50-05 11	F40-ZK
24-50-05 11	F41-ZK
24-50-05 11	F42-ZK
24-50-05 11	F46-ZK
24-50-05 11	F47-ZK
24-50-05 11	F48-ZK
24-50-05 11	F5-DAC
24-50-05 11	F50-ZK
24-50-05 11	F51-ZK
24-50-05 11	F52-ZK
24-50-05 11	F53-ZK
24-50-05 11	F54-ZK
24-50-05 11	F55-ZK
24-50-05 11	F56-ZK
24-50-05 11	F57-ZK
24-50-05 11	F58-ZK
24-50-05 11	F59-ZK
24-50-05 11	F6-DAC
24-50-05 11	F6-ZK
24-50-05 11	F60-ZK
24-50-05 11	F61-ZK
24-50-05 11	F62-ZK
24-50-05 11	F63-ZK
24-50-05 11	F64-ZK

PART NUMBER CH-SECT-UNIT-FIG-ITEM	IDENT
5920-99-0120075	
24-50-05 11	F65-ZK
24-50-05 11	F66-ZK
24-50-05 11	F67-ZK
24-50-05 11	F7-DAC
24-50-05 11	F7-ZK
24-50-05 11	F70-ZK
24-50-05 11	F8-DAC
24-50-05 11	F8-ZK
24-50-05 11	F8-ZKA
24-50-05 11	F8-ZL
24-50-05 11	F9-ZKA
24-50-05 11	F9-ZL
24-50-05 14	F1-XZ
24-50-05 14	F1-ZK
24-50-05 14	F10-ZK
24-50-05 14	F10-ZKA
24-50-05 14	F10-ZL
24-50-05 14	F11-DAC
24-50-05 14	F11-ZL
24-50-05 14	F12-DAC
24-50-05 14	F12-ZL
24-50-05 14	F13-ZK
24-50-05 14	F13-ZL
24-50-05 14	F14-ZK
24-50-05 14	F14-ZL
24-50-05 14	F15-DAC
24-50-05 14	F15-GA
24-50-05 14	F15-ZK
24-50-05 14	F16-GA
24-50-05 14	F16-ZK
24-50-05 14	F16-ZL
24-50-05 14	F17-GA
24-50-05 14	F17-ZK
24-50-05 14	F17-ZL
24-50-05 14	F18-ZK
24-50-05 14	F18-ZL
24-50-05 14	F19-DAC
24-50-05 14	F19-ZK
24-50-05 14	F19-ZL
24-50-05 14	F2-DAC
24-50-05 14	F2-XZ
24-50-05 14	F2-ZK
24-50-05 14	F20-ZL
24-50-05 14	F21-ZK
24-50-05 14	F22-ZK
24-50-05 14	F24-ZL
24-50-05 14	F25-GA
24-50-05 14	F25-ZL
24-50-05 14	F26-GA
24-50-05 14	F26-ZL

PART NUMBER CH-SECT-UNIT-FIG-ITEM	IDENT
5920-99-0120075	
24-50-05 14	F27-GA
24-50-05 14	F27-ZL
24-50-05 14	F28-GA
24-50-05 14	F28-ZL
24-50-05 14	F29-ZK
24-50-05 14	F3-DAC
24-50-05 14	F3-GA
24-50-05 14	F3-XZ
24-50-05 14	F3-ZKA
24-50-05 14	F3-ZL
24-50-05 14	F30-GA
24-50-05 14	F30-ZK
24-50-05 14	F30-ZL
24-50-05 14	F31-ZK
24-50-05 14	F32-ZK
24-50-05 14	F33-ZK
24-50-05 14	F33-ZL
24-50-05 14	F34-ZK
24-50-05 14	F34-ZL
24-50-05 14	F35-ZK
24-50-05 14	F35-ZL
24-50-05 14	F36-ZK
24-50-05 14	F36-ZL
24-50-05 14	F37-ZK
24-50-05 14	F38-ZK
24-50-05 14	F39-ZK
24-50-05 14	F4-DAC
24-50-05 14	F4-GA
24-50-05 14	F4-XZ
24-50-05 14	F4-ZL
24-50-05 14	F40-ZK
24-50-05 14	F41-ZK
24-50-05 14	F42-ZK
24-50-05 14	F46-ZK
24-50-05 14	F47-ZK
24-50-05 14	F48-ZK
24-50-05 14	F5-DAC
24-50-05 14	F50-ZK
24-50-05 14	F51-ZK
24-50-05 14	F52-ZK
24-50-05 14	F53-ZK
24-50-05 14	F54-ZK
24-50-05 14	F55-ZK
24-50-05 14	F56-ZK
24-50-05 14	F57-ZK
24-50-05 14	F58-ZK
24-50-05 14	F59-ZK
24-50-05 14	F6-DAC
24-50-05 14	F6-ZK
24-50-05 14	F60-ZK

PART NUMBER CH-SECT-UNIT-FIG-ITEM	IDENT
5920-99-0120075	
24-50-05 14	F61-ZK
24-50-05 14	F62-ZK
24-50-05 14	F63-ZK
24-50-05 14	F64-ZK
24-50-05 14	F65-ZK
24-50-05 14	F66-ZK
24-50-05 14	F67-ZK
24-50-05 14	F7-DAC
24-50-05 14	F7-ZK
24-50-05 14	F70-ZK
24-50-05 14	F8-DAC
24-50-05 14	F8-ZK
24-50-05 14	F8-ZKA
24-50-05 14	F8-ZL
24-50-05 14	F9-ZKA
24-50-05 14	F9-ZL
24-50-05 15	F1-XZ
24-50-05 15	F1-ZK
24-50-05 15	F10-ZK
24-50-05 15	F10-ZKA
24-50-05 15	F10-ZL
24-50-05 15	F11-DAC
24-50-05 15	F11-ZL
24-50-05 15	F12-DAC
24-50-05 15	F12-ZL
24-50-05 15	F13-ZK
24-50-05 15	F13-ZL
24-50-05 15	F14-ZK
24-50-05 15	F14-ZL
24-50-05 15	F15-DAC
24-50-05 15	F15-GA
24-50-05 15	F15-ZK
24-50-05 15	F16-GA
24-50-05 15	F16-ZK
24-50-05 15	F16-ZL
24-50-05 15	F17-GA
24-50-05 15	F17-ZK
24-50-05 15	F17-ZL
24-50-05 15	F18-ZK
24-50-05 15	F19-DAC
24-50-05 15	F19-ZK
24-50-05 15	F2-DAC
24-50-05 15	F2-XZ
24-50-05 15	F2-ZK
24-50-05 15	F21-ZK
24-50-05 15	F22-ZK
24-50-05 15	F24-ZL
24-50-05 15	F25-GA
24-50-05 15	F25-ZL
24-50-05 15	F26-GA

PART NUMBER CH-SECT-UNIT-FIG-ITEM	IDENT
5920-99-0120075	
24-50-05 15	F26-ZL
24-50-05 15	F27-GA
24-50-05 15	F27-ZL
24-50-05 15	F28-GA
24-50-05 15	F28-ZL
24-50-05 15	F29-ZK
24-50-05 15	F3-DAC
24-50-05 15	F3-GA
24-50-05 15	F3-XZ
24-50-05 15	F3-ZKA
24-50-05 15	F3-ZL
24-50-05 15	F30-GA
24-50-05 15	F30-ZK
24-50-05 15	F30-ZL
24-50-05 15	F31-ZK
24-50-05 15	F32-ZK
24-50-05 15	F33-ZK
24-50-05 15	F33-ZL
24-50-05 15	F34-ZK
24-50-05 15	F34-ZL
24-50-05 15	F35-ZK
24-50-05 15	F35-ZL
24-50-05 15	F36-ZK
24-50-05 15	F36-ZL
24-50-05 15	F37-ZK
24-50-05 15	F38-ZK
24-50-05 15	F39-ZK
24-50-05 15	F4-DAC
24-50-05 15	F4-GA
24-50-05 15	F4-XZ
24-50-05 15	F4-ZL
24-50-05 15	F40-ZK
24-50-05 15	F41-ZK
24-50-05 15	F42-ZK
24-50-05 15	F46-ZK
24-50-05 15	F47-ZK
24-50-05 15	F48-ZK
24-50-05 15	F5-DAC
24-50-05 15	F50-ZK
24-50-05 15	F51-ZK
24-50-05 15	F52-ZK
24-50-05 15	F53-ZK
24-50-05 15	F54-ZK
24-50-05 15	F55-ZK
24-50-05 15	F56-ZK
24-50-05 15	F57-ZK
24-50-05 15	F58-ZK
24-50-05 15	F59-ZK
24-50-05 15	F6-DAC
24-50-05 15	F6-ZK

PART NUMBER CH-SECT-UNIT-FIG-ITEM	IDENT
5920-99-0120075	
24-50-05 15	F60-ZK
24-50-05 15	F61-ZK
24-50-05 15	F62-ZK
24-50-05 15	F63-ZK
24-50-05 15	F64-ZK
24-50-05 15	F65-ZK
24-50-05 15	F66-ZK
24-50-05 15	F67-ZK
24-50-05 15	F7-DAC
24-50-05 15	F7-ZK
24-50-05 15	F70-ZK
24-50-05 15	F8-DAC
24-50-05 15	F8-ZK
24-50-05 15	F8-ZKA
24-50-05 15	F8-ZL
24-50-05 15	F9-ZKA
24-50-05 15	F9-ZL
26-10-10 03	F11-ZL
26-10-10 03	F12-ZL
26-10-30 03	F36-ZK
26-10-30 03	F57-ZK
26-10-30 03	F58-ZK
27-00-10 03	F14-ZL
27-00-10 04	F14-ZL
27-30-10 07	F24-ZL
27-30-10 08	F24-ZL
27-33-00 05	F19-DAC
27-33-00 05	F3-DAC
27-33-00 05	F4-DAC
27-33-00 05	F5-DAC
27-33-00 05	F6-DAC
27-33-00 07	F19-DAC
27-33-00 07	F3-DAC
27-33-00 07	F4-DAC
27-33-00 07	F5-DAC
27-33-00 07	F6-DAC
28-21-05 02	F13-ZL
28-21-05 03	F13-ZL
28-21-05 04	F13-ZL
28-40-20 02	F51-ZK
28-40-20 02	F61-ZK
28-40-30 05	F2-ZK
28-40-30 05	F42-ZK
28-40-40 02	F16-ZL
28-40-40 02	F17-ZL
28-40-40 02	F53-ZK
28-40-40 02	F63-ZK
29-32-10 05	F1-ZK
30-10-10 11	F2-DAC
30-20-10 02	F56-ZK

PART NUMBER CH-SECT-UNIT-FIG-ITEM	IDENT
5920-99-0120075	
30-20-10 02	F66-ZK
30-30-10 02	F12-DAC
30-30-20 02	F15-DAC
30-30-20 02	F31-ZK
30-30-31 02	F7-DAC
31-20-60 02	F37-ZK
31-50-05 03	F1-DAC
31-50-05 03	F10-ZJ
31-50-05 03	F2-ZJ
31-50-05 03	F3-ZJ
31-50-05 03	F4-ZJ
31-50-05 03	F9-ZJ
32-60-30 02	F34-ZK
32-60-30 03	F34-ZK
33-10-05 05	F8-DAC
33-10-05 07	F8-DAC
33-10-05 08	F8-DAC
33-10-05 09	F8-DAC
33-10-05 11	F8-DAC
33-31-10 04	F65-ZK
33-50-10 09	F26-ZL
33-50-10 09	F3-ZL
49-60-10 05	F10-ZKA
49-60-10 05	F3-GA
49-60-10 05	F3-ZKA
49-60-10 05	F4-GA
49-60-10 05	F8-ZKA
49-60-10 05	F9-ZKA
49-60-10 05	F9-ZL
49-60-30 06	F11-ZK
49-60-30 06	F2-ZKA
49-60-30 06	F28-ZKA
49-60-30 06	F3-ZKA
49-60-30 08	F11-ZK
49-60-30 08	F2-ZKA
49-60-30 08	F28-ZKA
49-60-30 08	F3-ZKA
49-60-30 09	F11-ZK
49-60-30 09	F2-ZKA
49-60-30 09	F28-ZKA
49-60-30 09	F3-ZKA
49-60-30 11	F11-ZK
49-60-30 11	F2-ZKA
49-60-30 11	F28-ZKA
49-60-30 11	F3-ZKA
73-20-01 05	F27-ZL
73-20-01 05	F52-ZK
73-20-02 05	F28-ZK
73-20-02 05	F35-ZK
73-20-02 05	F62-ZK

PART NUMBER CH-SECT-UNIT-FIG-ITEM	IDENT
5920-99-0120075	
73-20-10 03	F19-ZK
77-10-10 02	F15-ZK
77-10-10 02	F16-ZK
77-10-10 02	F17-ZK
77-10-10 02	F18-ZK
77-10-10 02	F46-ZK
77-10-10 02	F47-ZK
77-10-10 02	F48-ZK
77-10-10 02	F6-ZK
77-10-10 02	F7-ZK
77-10-10 02	F8-ZK
77-20-10 02	F10-ZK
77-20-10 02	F13-ZK
77-20-10 02	F14-ZK
77-20-10 02	F50-ZK
79-30-10 02	F54-ZK
79-30-10 02	F64-ZK
5920-99-0120076	
24-50-01 05	F1-GA
24-50-01 05	F1-ZL
24-50-01 05	F14-DAC
24-50-01 05	F2-ZL
24-50-01 05	F29-GA
24-50-01 05	F3-ZL
24-50-01 06	F1-GA
24-50-01 06	F1-ZL
24-50-01 06	F14-DAC
24-50-01 06	F2-ZL
24-50-01 06	F29-GA
24-50-01 06	F3-ZL
24-50-01 07	F1-GA
24-50-01 07	F1-ZL
24-50-01 07	F14-DAC
24-50-01 07	F2-ZL
24-50-01 07	F29-GA
24-50-01 07	F3-ZL
24-50-05 08	F1-GA
24-50-05 08	F1-ZL
24-50-05 08	F10-DAC
24-50-05 08	F14-DAC
24-50-05 08	F17-DAC
24-50-05 08	F18-DAC
24-50-05 08	F2-ZL
24-50-05 08	F20-DAC
24-50-05 08	F29-GA
24-50-05 08	F5-ZL
24-50-05 08	F6-ZL
24-50-05 08	F9-DAC
24-50-05 11	F1-GA
24-50-05 11	F1-ZKA

PART NUMBER CH-SECT-UNIT-FIG-ITEM	IDENT
5920-99-0120076	
24-50-05 11	F1-ZL
24-50-05 11	F10-DAC
24-50-05 11	F14-DAC
24-50-05 11	F17-DAC
24-50-05 11	F18-DAC
24-50-05 11	F2-ZKA
24-50-05 11	F2-ZL
24-50-05 11	F20-DAC
24-50-05 11	F29-GA
24-50-05 11	F5-ZKA
24-50-05 11	F5-ZL
24-50-05 11	F6-ZL
24-50-05 11	F9-DAC
24-50-05 14	F1-GA
24-50-05 14	F1-ZKA
24-50-05 14	F1-ZL
24-50-05 14	F10-DAC
24-50-05 14	F14-DAC
24-50-05 14	F17-DAC
24-50-05 14	F18-DAC
24-50-05 14	F2-ZKA
24-50-05 14	F2-ZL
24-50-05 14	F20-DAC
24-50-05 14	F29-GA
24-50-05 14	F5-ZKA
24-50-05 14	F5-ZL
24-50-05 14	F6-ZL
24-50-05 14	F9-DAC
24-50-05 15	F1-GA
24-50-05 15	F1-ZKA
24-50-05 15	F1-ZL
24-50-05 15	F10-DAC
24-50-05 15	F14-DAC
24-50-05 15	F17-DAC
24-50-05 15	F18-DAC
24-50-05 15	F2-ZKA
24-50-05 15	F2-ZL
24-50-05 15	F20-DAC
24-50-05 15	F29-GA
24-50-05 15	F5-ZKA
24-50-05 15	F5-ZL
24-50-05 15	F6-ZL
24-50-05 15	F9-DAC
33-10-05 05	F17-DAC
33-10-05 05	F18-DAC
33-10-05 05	F20-DAC
33-10-05 05	F6-AB
33-10-05 07	F17-DAC
33-10-05 07	F18-DAC
33-10-05 07	F20-DAC

PART NUMBER CH-SECT-UNIT-FIG-ITEM	IDENT
5920-99-0120076	
33-10-05 07	F6-AB
33-10-05 08	F17-DAC
33-10-05 08	F18-DAC
33-10-05 08	F20-DAC
33-10-05 08	F6-AB
33-10-05 09	F17-DAC
33-10-05 09	F18-DAC
33-10-05 09	F20-DAC
33-10-05 09	F6-AB
33-10-05 11	F17-DAC
33-10-05 11	F18-DAC
33-10-05 11	F20-DAC
33-10-05 11	F6-AB
33-10-20 04	F1-AA
33-10-20 04	F1-AB
33-10-20 04	F10-DAC
33-10-20 04	F2-AA
33-10-20 04	F2-AB
33-10-20 04	F3-AA
33-10-20 04	F3-AB
33-10-20 04	F4-AA
33-10-20 04	F4-AB
33-10-20 04	F5-AA
33-10-20 04	F5-AB
33-10-20 04	F6-AA
33-10-20 04	F7-AA
33-10-20 04	F9-DAC
33-10-20 07	F1-AA
33-10-20 07	F1-AB
33-10-20 07	F10-DAC
33-10-20 07	F2-AA
33-10-20 07	F2-AB
33-10-20 07	F3-AA
33-10-20 07	F3-AB
33-10-20 07	F4-AA
33-10-20 07	F4-AB
33-10-20 07	F6-AA
33-10-20 07	F7-AA
33-10-20 07	F9-DAC
33-10-20 08	F1-AA
33-10-20 08	F1-AB
33-10-20 08	F10-DAC
33-10-20 08	F2-AA
33-10-20 08	F2-AB
33-10-20 08	F3-AA
33-10-20 08	F3-AB
33-10-20 08	F4-AA
33-10-20 08	F4-AB
33-10-20 08	F6-AA
33-10-20 08	F7-AA

PART NUMBER CH-SECT-UNIT-FIG-ITEM	IDENT
5920-99-0120076	
33-10-20 08	F9-DAC
33-30-05 07	F1-ZL
33-30-05 08	F1-ZL
49-60-10 05	F1-ZKA
49-60-10 05	F2-ZKA
49-60-30 06	F1-ZKA
49-60-30 06	F6-ZKA
49-60-30 08	F1-ZKA
49-60-30 08	F6-ZKA
49-60-30 09	F1-ZKA
49-60-30 09	F6-ZKA
49-60-30 11	F1-ZKA
49-60-30 11	F6-ZKA
80-10-10 04	F2-ZL
80-10-10 04	F5-ZL
80-10-10 04	F6-ZL
5920-99-0120077	
33-30-15 07	F29-DAC
33-30-15 07	F30-DAC
49-60-30 06	F4-ZKA
49-60-30 06	F5-ZKA
49-60-30 08	F4-ZKA
49-60-30 08	F5-ZKA
49-60-30 09	F4-ZKA
49-60-30 09	F5-ZKA
49-60-30 11	F4-ZKA
5920-99-0120078	
24-50-05 08	F29-ZL
24-50-05 08	F37-ZL
24-50-05 11	F29-ZL
24-50-05 11	F37-ZL
24-50-05 11	F4-ZKA
24-50-05 14	F29-ZL
24-50-05 14	F37-ZL
24-50-05 14	F4-ZKA
24-50-05 15	F29-ZL
24-50-05 15	F37-ZL
24-50-05 15	F4-ZKA
73-20-10 03	F29-ZL
73-20-10 03	F37-ZL
5920-99-0120079	
24-21-17 03	F40-ZK
24-21-17 04	F40-ZK
24-50-01 05	F7-ZL
24-50-01 06	F7-ZL
24-50-01 07	F7-ZL
24-50-05 08	F7-ZL
24-50-05 11	F7-ZL
24-50-05 14	F7-ZL
24-50-05 15	F7-ZL

PART NUMBER CH-SECT-UNIT-FIG-ITEM	IDENT
5920-99-0120080	
31-50-05 03	F71-ZK
6AT4	
31-50-01 04	M-CC
31-50-01 07	M-CC
31-50-01 08	M-CC
31-50-01 09	M-CC
31-50-01 14	AN-CD
33-10-20 04	L-CA
33-10-20 07	L-CA
33-10-20 08	L-CA
6A43	
31-50-01 04	A-CC
31-50-01 07	A-CC
31-50-01 08	A-CC
31-50-01 09	A-CC
31-50-01 14	AM-CD
33-10-20 04	M-CA
33-10-20 07	M-CA
33-10-20 08	M-CA
6HM7-3	
80-10-10 04	BQ-BA
80-10-10 04	BR-BA
6TC14-10	
24-50-05 08	B1-ZKA
24-50-05 11	B1-ZKA
24-50-05 14	B1-ZKA
24-50-05 15	B1-ZKA
49-60-10 05	B1-ZKA
60-1755-1	
33-40-10 05	SW
33-40-10 05	SX
33-40-10 05	SY
60-3146-3	
33-40-10 06	SW
33-40-10 06	SX
33-40-10 06	SY
601-4300	
21-31-10 07	BN-BA
32-60-10 04	BN-BA
602EN1-6	
27-00-10 03	JC
27-00-10 04	JC
602GB129-12-1	
29-32-10 05	G-CC-R
31-20-60 02	G-R
602GB129-20-1	
21-20-10 03	CC1-P
27-61-10 04	CC2-P
27-61-10 08	CC2-P
29-32-10 05	CC1-P

PART NUMBER CH-SECT-UNIT-FIG-ITEM	IDENT
602GB129-20-1	
30-20-10 02	CC3-P
31-20-60 02	CC1-P
73-20-02 05	CC2-P
73-20-02 05	CC2-R
602GR133-18-1	
33-10-05 05	BA1-P
33-10-05 11	BA1-P
6020-12-8PNCOND *	
C	
21-60-10 11	P1-ZT-P
6020-14-19SNCON *	
DD	
27-30-10 07	TX
27-30-10 08	TX
6020-22-55PNCON *	
DD	
33-10-10 31	CD2-P
6020-8-33PNCOND *	
D	
33-10-05 05	BK
33-10-05 05	BL
33-10-05 07	BK
33-10-05 07	BL
33-10-05 08	BK
33-10-05 08	BL
33-10-05 09	BK
33-10-05 09	BL
33-10-05 11	BK
33-10-05 11	BL
6020-8-33SFCOND *	
D	
32-60-10 04	ND-R
6026-10-6PNCOND *	
D	
21-60-10 10	SH-P
21-60-20 03	SH-P
6026-10-6SN	
31-20-60 02	AU-R
31-20-60 02	AW-R
6026-10-6SNCOND *	
D	
33-20-10 10	J-R
6026-10-6SNCOND *	
B	
29-32-10 05	QN-R
6026-10-6SNCOND *	
D	
21-20-10 03	FX
21-20-10 03	FY
6026-12-10SN	

PART NUMBER CH-SECT-UNIT-FIG-ITEM	IDENT
6026-12-10SN	
29-32-10 05	G-CC-R
31-20-60 02	G-R
6026-12-10SNCON * DB	
29-32-10 05	G-CC-R
6026-12-10SNCON * D1	
29-32-10 05	G-CC-R
6026-12-10SN08	
29-32-10 05	G-CC-R
6026-12-8SNCOND * D	
21-60-10 11	P1-ZT-R
6026-14-12PNCON * DD	
23-31-20 52	P629
33-20-10 10	AC-R
6026-14-19PNCON * DB	
21-31-10 07	CD1-R
31-50-01 04	CD1-R
31-50-01 07	CD1-R
31-50-01 08	CD1-R
31-50-01 09	CD1-R
31-50-01 14	CD1-R
33-10-10 31	CC4-R
33-10-10 31	CD1-R
33-10-20 04	CD1-R
33-10-20 07	CD1-R
33-10-20 08	CD1-R
6026-14-19SWCON * DE	
22-10-40 53	A635
22-10-40 53	A636
6026-14-5PCONDB	
33-40-10 05	GM-R
33-40-10 06	GM-R
6026-14-5SNCOND * D	
33-10-05 09	C-AB
33-10-05 11	C-AB
33-10-20 08	A-AA-R
33-10-20 08	A-AB-R
33-10-20 08	C-AA-R
6026-16-26PNCON * DB	
33-10-10 31	CA1-R
33-10-20 04	CA1-R
33-10-20 07	CA1-R
33-10-20 08	CA1-R

PART NUMBER CH-SECT-UNIT-FIG-ITEM	IDENT
6026-16-26SNCON * DD	
27-33-00 05	CA3-R
27-33-00 05	CD3-R
27-33-00 07	CA3-R
27-33-00 07	CD3-R
6026-18-32PNCON * DB	
22-10-40 53	PBA-1
27-24-10 02	BA1-R
27-24-10 03	BA1-P
31-20-35 02	BA1-P
31-20-35 03	BA1-R
33-10-05 05	BA1-R
33-10-05 07	BA1-R
33-10-05 08	BA1-R
33-10-05 09	BA1-R
33-10-05 11	BA1-R
6026-20-16PNCON * DD	
33-10-05 05	AB1-R
33-10-05 07	AB1-R
33-10-05 08	AB1-R
33-10-05 09	AB1-R
33-10-05 11	AB1-R
33-10-20 04	AA1-R
33-10-20 04	AB1-R
33-10-20 07	AA1-R
33-10-20 07	AB1-R
33-10-20 08	AA1-R
33-10-20 08	AB1-R
6026-20-41P	
30-20-10 02	CC3-R
33-10-05 05	CC1-R
33-10-05 07	CC1-R
33-10-05 08	CC1-R
33-10-05 09	CC1-R
33-10-05 11	CC1-R
6026-20-41PN	
21-20-10 03	CC1-P
29-32-10 05	CC1-P
31-20-60 02	CC1-P
31-50-01 04	CC1-R
31-50-01 04	CC3-R
31-50-01 07	CC1-R
31-50-01 07	CC3-R
31-50-01 08	CC1-R
31-50-01 08	CC3-R
31-50-01 09	CC1-R
31-50-01 09	CC3-R
31-50-01 14	CC1-R

PART NUMBER CH-SECT-UNIT-FIG-ITEM	IDENT
6026-20-41PN	
31-50-01 14	CC3-R
33-10-20 04	CC1-R
33-10-20 07	CC1-R
33-10-20 08	CC1-R
6026-20-41PNCON *	
DB	
21-20-10 03	CC1-P
29-32-10 05	CC1-P
31-50-01 04	CC3-R
31-50-01 07	CC3-R
31-50-01 08	CC3-R
31-50-01 09	CC3-R
31-50-01 14	CC3-R
6026-20-41PNCON *	
D1	
21-20-10 03	CC1-P
29-32-10 05	CC1-P
31-20-60 02	CC1-P
6026-20-41PNC8	
31-50-01 04	CC3-R
31-50-01 07	CC3-R
31-50-01 08	CC3-R
31-50-01 09	CC3-R
31-50-01 14	CC3-R
6026-20-41PN08	
21-20-10 03	CC1-P
29-32-10 05	CC1-P
6026-20-41PW	
27-61-10 03	CC2-R
27-61-10 04	CC2-P
27-61-10 08	CC2-P
33-10-20 04	CC2-R
33-10-20 07	CC2-R
33-10-20 08	CC2-R
73-20-02 05	CC2-R
6026-20-41PWCON *	
DB	
32-60-10 04	CC2-P
6026-20-41PWCON *	
DD	
28-41-10 02	CC2-P
28-41-10 03	CC2-P
6026-22-41PNCON *	
DD	
27-33-00 05	P2-P
27-33-00 07	P2-JA-P
28-21-05 02	P2-JA-R
28-21-05 03	P2-JA-R
28-21-05 04	P2-JA-R
28-40-10 04	JAP2-R

PART NUMBER CH-SECT-UNIT-FIG-ITEM	IDENT
6026-22-41PNCON *	
DD	
28-40-10 05	JAP2-R
32-60-10 04	P2-JA-P
32-60-20 02	P2-JA-P
33-40-20 04	P2-JA-R
34-13-01 04	P2-JA-P
34-13-01 08	JA-P2-P
6026-22-41PWCON *	
DD	
28-40-10 04	JAP3-R
28-40-10 05	JAP3-R
33-40-10 05	P3-JA-R
33-40-10 06	P3-JA-R
73-20-10 03	JAP3-P
78-30-05 01	P3-JA-P
78-30-05 02	P3-JA-P
6026-22-55PNCON *	
DD	
28-41-10 02	P4-JA-P
28-41-10 03	P4-JA-P
28-41-20 03	P4-JA-P
28-41-30 02	P4-JA-P
6026-22-55PWCON *	
DD	
33-30-05 07	JP2-DA-P
33-30-05 08	JP2-DA-P
6026-22-55SNCON *	
DB	
34-30-10 53	P527P1
6026-22-55SNCON *	
DD	
22-10-40 53	P129R
33-10-10 31	CD2-R
34-30-10 53	P129R
34-30-20 53	P129R
6026-22-55SWCON *	
DB	
34-30-20 53	P527P5
6026-24-61PNCON *	
DD	
33-10-10 31	CA2-R
6026-24-61PWCON *	
DD	
27-00-10 03	P1-JA-R
27-00-10 04	P1-JA-P
27-33-00 07	P1-JA-P
27-50-10 02	P1-JA-P
27-61-10 03	P1-JA-R
27-61-10 04	P1-JA-R
27-61-10 08	P1-JA-P

PART NUMBER CH-SECT-UNIT-FIG-ITEM	IDENT
6026-24-61PWCON *	
DD	
28-21-05 02	P1-JA-R
28-21-05 03	P1-JA-R
28-21-05 04	P1-JA-R
32-60-10 04	P1-JA-P
32-60-20 02	P1-JA-P
32-60-30 02	P1-JA-P
32-60-30 03	P1-JA-P
33-40-10 05	P1-JA-R
33-40-10 06	P1-JA-R
33-40-20 04	P1-JA-R
33-40-30 03	P1-JA-R
6026-24-61SWCON *	
DD	
34-30-10 53	P129C
6026-24-61SYCON *	
DD	
34-30-20 53	P129M
6026-24-61SZCON *	
DD	
22-10-40 53	P129G
6026-8-33PFCOND *	
D	
32-60-10 04	ND-P
6026-8-33SNCOND *	
D	
33-10-05 05	BK
33-10-05 05	BL
33-10-05 07	BK
33-10-05 07	BL
33-10-05 08	BK
33-10-05 08	BL
33-10-05 09	BK
33-10-05 09	BL
33-10-05 11	BK
33-10-05 11	BL
6026-8-33SNCOND *	
E	
28-41-20 03	KAA
6027-10-6PNCOND *	
C	
33-20-10 10	J-P
6027-10-6SNCOND *	
D	
21-60-10 10	SH-R
21-60-20 03	SH-R
6027-14-12SNCON *	
DD	
23-31-10 58	J629
23-31-10 65	J629

PART NUMBER CH-SECT-UNIT-FIG-ITEM	IDENT
6027-14-12SNCON *	
DD	
33-20-10 10	AC-P
6027-14-19SNCON *	
DA	
33-10-20 04	CD1-P
33-10-20 07	CD1-P
33-10-20 08	CD1-P
6027-14-19SNCON *	
DB	
21-31-10 07	CD1-P
31-50-01 04	CD1-P
31-50-01 07	CD1-P
31-50-01 08	CD1-P
31-50-01 09	CD1-P
31-50-01 14	CD1-P
33-10-10 31	CC4-P
33-10-10 31	CD1-P
6027-16-26PNCON *	
DC	
27-33-00 05	CA3-P
27-33-00 05	CD3-P
27-33-00 07	CA3-P
27-33-00 07	CD3-P
6027-16-26SNCON *	
DB	
33-10-10 31	CA1-P
33-10-20 04	CA1-P
33-10-20 07	CA1-P
33-10-20 08	CA1-P
6027-18-32S	
33-10-05 05	BA1-P
33-10-05 11	BA1-P
6027-18-32SNCON *	
DB	
22-10-40 53	PLCB
27-24-10 02	BA1-P
27-24-10 03	BA1-R
31-20-35 02	BA1-R
31-20-35 03	BA1-P
33-10-05 05	BA1-P
33-10-05 07	BA1-P
33-10-05 08	BA1-P
33-10-05 09	BA1-P
33-10-05 11	BA1-P
6027-20-16SNCON *	
DD	
33-10-05 05	AB1-P
33-10-05 07	AB1-P
33-10-05 08	AB1-P
33-10-05 09	AB1-P

PART NUMBER CH-SECT-UNIT-FIG-ITEM	IDENT
6027-20-16SNCON *	
DD	
33-10-05 11	AB1-P
33-10-20 04	AA1-P
33-10-20 04	AB1-P
33-10-20 07	AA1-P
33-10-20 07	AB1-P
33-10-20 08	AA1-P
33-10-20 08	AB1-P
6027-20-41SNCON *	
DA	
33-10-20 04	CC1-P
33-10-20 07	CC1-P
33-10-20 08	CC1-P
6027-20-41SNCON *	
DB	
21-20-10 03	CC1-R
29-32-10 05	CC1-R
30-20-10 02	CC3-P
31-20-60 02	CC1-R
31-50-01 04	CC1-P
31-50-01 04	CC3-P
31-50-01 07	CC1-P
31-50-01 07	CC3-P
31-50-01 08	CC1-P
31-50-01 08	CC3-P
31-50-01 09	CC1-P
31-50-01 09	CC3-P
31-50-01 14	CC1-P
31-50-01 14	CC3-P
33-10-05 05	CC1-P
33-10-05 07	CC1-P
33-10-05 08	CC1-P
33-10-05 09	CC1-P
33-10-05 11	CC1-P
6027-20-41SWCON *	
DA	
28-41-10 02	CC2-R
28-41-10 03	CC2-R
32-60-10 04	CC2-R
33-10-20 04	CC2-P
33-10-20 07	CC2-P
33-10-20 08	CC2-P
6027-20-41SWCON *	
DB	
27-61-10 03	CC2-P
27-61-10 04	CC2-R
27-61-10 08	CC2-R
28-41-10 02	CC2-R
28-41-10 03	CC2-R
73-20-02 05	CC2-P

PART NUMBER CH-SECT-UNIT-FIG-ITEM	IDENT
6027-22-41SNCON *	
DD	
27-33-00 05	P2-P
27-33-00 05	P2-R
27-33-00 07	P2-JA-R
28-21-05 02	P2-JA-P
28-21-05 03	P2-JA-P
28-21-05 04	P2-JA-P
28-40-10 04	JAP2-P
28-40-10 05	JAP2-P
32-60-20 02	P2-JA-R
33-40-20 04	P2-JA-P
34-13-01 04	P2-JA-R
34-13-01 08	JA-P2-R
6027-22-41SWCON *	
DD	
28-40-10 04	JAP3-P
28-40-10 05	JAP3-P
33-40-10 05	P3-JA-P
33-40-10 06	P3-JA-P
73-20-10 03	JAP3-R
78-30-05 01	P3-JA-R
78-30-05 02	P3-JA-R
6027-22-55SNCON *	
DD	
28-41-10 02	JP1-DB-R
28-41-10 02	P4-JA-R
28-41-10 03	JP1-DB-R
28-41-10 03	P4-JA-R
28-41-20 03	JP1-DB-R
28-41-20 03	P4-JA-R
28-41-30 02	JP1-DB-R
28-41-30 02	P4-JA-R
6027-22-55SWCON *	
DD	
28-41-10 02	JP2-DB-R
28-41-10 03	JP2-DB-R
28-41-20 03	JP2-DB-R
28-41-30 02	JP2-DB-R
33-30-05 07	JP2-DA-R
33-30-05 08	JP2-DA-R
6027-24-61PWCON *	
DD	
27-33-00 05	P1-JA-P
6027-24-61SNCON *	
DD	
33-10-10 31	CA2-P
6027-24-61SWCON *	
DD	
27-00-10 03	P1-JA-P
27-00-10 04	P1-JA-R

PART NUMBER CH-SECT-UNIT-FIG-ITEM	IDENT
6027-24-61SWCON *	
DD	
27-33-00 05	P1-JA-R
27-33-00 07	P1-JA-R
27-50-10 02	P1-JA-R
27-61-10 03	P1-JA-P
27-61-10 04	P1-JA-P
27-61-10 08	P1-JA-R
28-21-05 02	P1-JA-P
28-21-05 03	P1-JA-P
28-21-05 04	P1-JA-P
32-60-10 04	P1-JA-R
32-60-10 04	P2-JA-R
32-60-20 02	P1-JA-R
32-60-30 02	P1-JA-R
32-60-30 03	P1-JA-R
33-40-10 05	P1-JA-P
33-40-10 06	P1-JA-P
33-40-20 04	P1-JA-P
33-40-30 03	P1-JA-P
607148-1	
21-60-10 08	SL
21-60-10 10	SL
21-60-10 11	SL
617452-3	
21-60-10 08	DK
21-60-10 10	DK
21-60-10 11	DK
622-3260-001	
27-30-10 07	TX
27-30-10 08	TX
622-5027-001	
22-10-40 53	A635
22-10-40 53	A636
622-6137-001	
34-30-10 53	RE209
34-30-20 53	RE244
622-6195-315	
22-10-40 53	A180
622-6208-004	
22-10-40 53	G263
623179	
28-40-40 02	P16-M1
28-40-40 02	P16-M2
6240-99-9959182	
49-60-30 09	LG-DE
49-60-30 11	LG-DE
627578-1	
21-60-10 08	NT-CG
21-60-10 10	NT-CG
21-60-10 11	NT-CG

PART NUMBER CH-SECT-UNIT-FIG-ITEM	IDENT
6308-0010A	
27-33-00 05	H-DR
27-33-00 05	L-DR
27-33-00 07	H-DR
27-33-00 07	L-DR
6333-014-01A4	
27-61-10 03	X-CC
27-61-10 04	X-CC
27-61-10 08	X-CC
28-41-10 02	AE-DB
28-41-10 03	AE-DB
28-41-20 03	AC-DB
28-41-30 02	AG-DB
28-41-30 02	AH-DB
6333-019-01A	
28-41-10 02	AW-CC
28-41-10 03	AW-CC
634-1388-001	
22-10-40 53	X180P1
22-10-40 53	X180P2
652-1	
30-40-15 07	C-DAG
30-40-15 07	D-DAG
30-40-15 07	E-DAG
30-40-15 07	F-DAG
30-40-15 07	G-DAG
30-40-15 07	H-DAG
652-2W	
30-40-15 07	C-DAG
30-40-15 07	D-DAG
30-40-15 07	E-DAG
30-40-15 07	F-DAG
30-40-15 07	G-DAG
30-40-15 07	H-DAG
30-40-15 10	C-DAG
30-40-15 10	D-DAG
30-40-15 10	E-DAG
30-40-15 10	F-DAG
30-40-15 10	G-DAG
30-40-15 10	H-DAG
30-40-15 11	C-DAG
30-40-15 11	D-DAG
30-40-15 11	E-DAG
30-40-15 11	F-DAG
30-40-15 11	G-DAG
30-40-15 11	H-DAG
30-40-15 12	C-DAG
30-40-15 12	D-DAG
30-40-15 12	E-DAG
30-40-15 12	F-DAG
30-40-15 12	G-DAG

PART NUMBER CH-SECT-UNIT-FIG-ITEM	IDENT
652-2W	
30-40-15 12	H-DAG
653-1248-001	
34-30-10 53	X209P1
34-30-10 53	X209P2
653-1258-001	
34-30-10 53	X209P1
34-30-10 53	X209P2
653-1284-001	
34-30-20 53	X244P1
34-30-20 53	X244P2
653-1285-001	
34-30-20 53	X244P1
34-30-20 53	X244P2
67100-1-32-350	
49-60-30 06	S13
49-60-30 08	S13
49-60-30 09	S13
49-60-30 11	S13
67121-53-068	
31-50-05 03	UH
6838	
33-10-20 04	P1-CC
33-10-20 04	P10-CC
33-10-20 04	P2-CC
33-10-20 04	P3-CC
33-10-20 04	P4-CC
33-10-20 04	P5-CC
33-10-20 04	P6-CC
33-10-20 04	P7-CC
33-10-20 04	P8-CC
33-10-20 04	P9-CC
695-4-20	
29-32-10 05	QN
695-4-27	
31-20-60 02	AU
31-20-60 02	AW
696-01-0013	
29-32-10 05	G-CC
696-010013	
31-20-60 02	G-CC
7MC1-201-10	
30-40-15 10	B1-DAB
30-40-15 10	B2-DAB
30-40-15 10	B3-DAB
30-40-15 10	B4-DAB
30-40-15 10	B5-DAB
30-40-15 10	B6-DAB
30-40-15 11	B1-DAB
30-40-15 11	B2-DAB
30-40-15 11	B3-DAB

PART NUMBER CH-SECT-UNIT-FIG-ITEM	IDENT
7MC1-201-10	
30-40-15 11	B4-DAB
30-40-15 11	B5-DAB
30-40-15 11	B6-DAB
30-40-15 12	B1-DAB
30-40-15 12	B2-DAB
30-40-15 12	B3-DAB
30-40-15 12	B4-DAB
30-40-15 12	B5-DAB
30-40-15 12	B6-DAB
7MC1-202-10	
24-21-17 03	B1-XZ
24-21-17 03	B2-XZ
24-21-17 04	B1-XZ
24-21-17 04	B2-XZ
702-4584	
33-10-20 04	W-CA
33-10-20 04	X-CA
33-10-20 07	W-CA
33-10-20 07	X-CA
33-10-20 08	W-CA
33-10-20 08	X-CA
703FSS	
49-60-30 06	A-ZZ
49-60-30 08	A-ZZ
49-60-30 09	A-ZZ
703ZS	
49-60-10 05	C-GA
49-60-10 05	H-GA
7064-4656	
33-40-15 02	A-AP
33-40-15 02	B-AP
72441-225-0AV2	
30-40-15 11	PKA
30-40-15 11	PLA
30-40-15 12	PKA
30-40-15 12	PLA
30-40-20 05	PSA
30-40-20 05	PTA
72444-030-0AV2	
23-31-20 52	TB628
27-30-10 07	N-WB
27-30-10 08	N-WB
27-33-00 05	J-WA
27-33-00 05	K
27-33-00 07	J-WA
27-33-00 07	K
27-50-10 02	L-WB
27-61-10 03	L-WB
27-61-10 04	L-WB
27-61-10 08	L-WA

PART NUMBER CH-SECT-UNIT-FIG-ITEM	IDENT
72444-030-0AV2	
28-40-10 04	L-WA
28-40-10 04	M-WA
28-40-10 05	L-WA
28-40-10 05	M-WA
28-40-30 05	J-WB
28-40-30 05	L-WA
28-40-30 05	L-WB
28-40-30 05	M-WA
30-30-20 02	K
30-30-20 02	N-WB
31-20-60 02	L-WB
32-60-30 02	K-WB
32-60-30 03	K-WB
33-10-05 05	K-WA
33-10-05 05	K-WB
33-10-05 05	L-WA
33-10-05 05	L-WB
33-10-05 05	M-WA
33-10-05 05	M-WB
33-10-05 07	K-WA
33-10-05 07	K-WB
33-10-05 07	L-WA
33-10-05 07	L-WB
33-10-05 07	M-WA
33-10-05 07	M-WB
33-10-05 08	K-WA
33-10-05 08	K-WB
33-10-05 08	L-WA
33-10-05 08	L-WB
33-10-05 08	M-WA
33-10-05 08	M-WB
33-10-05 09	K-WA
33-10-05 09	K-WB
33-10-05 09	L-WA
33-10-05 09	L-WB
33-10-05 09	M-WA
33-10-05 09	M-WB
33-10-05 11	J-WB
33-10-05 11	K-WA
33-10-05 11	K-WB
33-10-05 11	L-WA
33-10-05 11	L-WB
33-10-05 11	M-WA
33-10-05 11	M-WB
33-10-10 31	J-WA
33-10-10 31	J-WB
33-10-10 31	K-WA
33-10-10 31	K-WB
33-10-10 31	L-WA
33-10-10 31	L-WB

PART NUMBER CH-SECT-UNIT-FIG-ITEM	IDENT
72444-030-0AV2	
33-10-10 31	M-WB
33-10-20 04	J-WA
33-10-20 04	J-WB
33-10-20 04	K-WA
33-10-20 04	K-WB
33-10-20 04	L-WA
33-10-20 04	L-WB
33-10-20 04	M-WB
33-10-20 07	J-WA
33-10-20 07	J-WB
33-10-20 07	K-WA
33-10-20 07	K-WB
33-10-20 07	L-WA
33-10-20 07	L-WB
33-10-20 07	M-WB
33-10-20 08	J-WA
33-10-20 08	J-WB
33-10-20 08	K-WA
33-10-20 08	K-WB
33-10-20 08	L-WA
33-10-20 08	L-WB
33-10-20 08	M-WB
77-10-10 02	L-WA
77-10-10 02	L-WB
77-10-10 02	M-WA
77-10-10 02	M-WB
77-20-10 02	K-WB
77-20-10 02	L-WA
77-20-10 02	L-WB
77-20-10 02	M-WA
77-20-10 02	M-WB
78-30-05 01	L-WA
78-30-05 01	M-WA
78-30-05 01	M-WB
78-30-05 02	L-WA
78-30-05 02	M-WA
78-30-05 02	M-WB
79-30-10 02	L-WA
79-30-10 02	L-WB
72541-030-0AV2	
27-33-00 05	JBA
27-33-00 05	KB
27-33-00 07	JBA
27-33-00 07	KB
32-60-20 02	JBA
32-60-20 02	KB
72544-030-0AV2	
28-41-10 02	KK
28-41-10 03	KK
28-41-20 03	KK

PART NUMBER CH-SECT-UNIT-FIG-ITEM	IDENT
72544-030-0AV2	
28-41-30 02	KK
32-60-10 04	JK
32-60-10 04	KK
32-60-30 02	JK
32-60-30 03	JK
33-40-10 05	KK
33-40-10 06	KK
34-13-01 04	KK
34-13-01 08	KK
49-60-30 09	A-GG
49-60-30 09	J-GG
49-60-30 09	L-GG
73-20-10 03	KK
78-30-05 01	KK
78-30-05 02	KK
770-537	
30-30-31 02	FJ-DAB
30-30-31 02	FL-DAB
79-3183-253289A	
77-40-10 02	
79100	
34-30-10 53	CPRNV
34-30-10 53	CPRTG
8A36-01-1-03N	
24-21-17 03	LT-CG
24-21-17 04	LT-CG
8A36-01-2-2N	
30-30-31 02	FG-CG
80-10-0200	
33-40-10 05	HD
33-40-10 06	HD
80-10-1351	
30-30-20 02	A-DR
30-30-20 02	D-DR
82-5375	
34-30-10 53	PRTG
34-30-20 53	PRTE
82-849	
34-30-20 53	CPRTE
8525-16R10B6SN0 *	
02	
26-10-20 02	FZ-R
9-328-26-002	
28-40-30 05	D-CC
28-40-30 05	E-CC
9A60-02-1-6N	
24-50-01 05	LR-CG
24-50-01 06	LR-CG
24-50-01 07	LR-CG
9M60-01-2-3N	

PART NUMBER CH-SECT-UNIT-FIG-ITEM	IDENT
9M60-01-2-3N	
31-20-35 02	WM
9002EN16	
R 27-00-10 04	HM
R 27-00-10 04	HN
R 27-33-00 07	JHA
R 27-33-00 07	JJA
R 27-33-00 07	KHA
R 27-33-00 07	KJA
9005EN17	
32-60-10 04	NB
9006EN3	
32-60-10 04	JM
32-60-10 04	KM
32-60-20 02	JAA
32-60-20 02	KA
9006EN42	
32-60-10 04	JM
32-60-10 04	JM
32-60-10 04	KM
32-60-10 04	KM
9006EN43	
32-60-20 02	JAA
32-60-20 02	KA
9124-9290	
24-50-01 05	L-ZL
24-50-01 05	M-ZL
24-50-01 06	L-ZL
24-50-01 06	M-ZL
24-50-01 07	L-ZL
24-50-01 07	M-ZL
49-60-30 06	L-ZL
49-60-30 08	L-ZL
49-60-30 09	L-ZL
9201000-245	
30-10-10 11	RX
9274-4024	
24-21-17 03	H-XZ
24-21-17 03	J-XZ
28-21-05 02	JT
28-21-05 02	KT
28-21-05 03	JT
28-21-05 03	KT
30-30-20 02	H-XZ
30-30-20 02	J-XZ
30-30-20 02	K-XZ
30-40-20 03	K-XZ
9274-6205	
24-21-17 03	H-XZ
24-21-17 03	J-XZ
24-21-17 04	H-XZ

PART NUMBER CH-SECT-UNIT-FIG-ITEM	IDENT
9274-6205	
24-21-17 04	J-XZ
28-21-05 04	JT-JA
28-21-05 04	KT-JA
30-40-20 03	K-XZ
30-40-20 05	K-XZ
9330-4026	
21-30-10 02	AR-GG
21-30-10 04	AR-GG
24-21-17 03	L-XZ
24-21-17 04	L-XZ
24-90-01 05	AK-DAC
24-90-01 06	AK-DAC
28-21-05 02	AA-DAC
28-21-05 02	AK-DAC
28-21-05 03	AA-DAC
28-21-05 03	AK-DAC
28-21-05 04	AA-DAC
28-21-05 04	*AK-DAC*
94002-12	
33-10-05 05	C-AB
33-10-05 07	C-AB
33-10-05 08	C-AB
968087-2	
49-60-10 05	A-TQ
9750-0640	
24-50-01 06	ZM
24-50-01 06	ZN
24-50-01 07	ZM
24-50-01 07	ZN
99-0135626	
33-10-20 04	U-DAE
33-10-20 07	U-DAE
33-10-20 08	U-DAE
99-212	
28-41-10 02	CE-DB
28-41-10 03	CE-DB
28-41-20 03	CB-DB
28-41-20 03	CC-DB
28-41-20 03	CD-DB
28-41-30 02	CG-DB
28-41-30 02	CH-DB
99-222	
26-10-10 03	RL-CG
26-10-10 03	RM-CG
33-10-05 05	BL-CG
33-10-05 07	BL-CG
33-10-05 08	BL-CG
33-10-05 09	BL-CG
33-10-05 11	BL-CG
99-223	

PART NUMBER CH-SECT-UNIT-FIG-ITEM	IDENT
99-223	
73-20-02 05	BL-CC
73-20-02 05	BM-CC
99-230	
31-20-60 02	H-CC
32-60-10 04	AX-CC
32-60-10 04	AY-CC
32-60-10 04	AZ-CC
99-623	
21-31-10 07	DR-CD
99-630	
31-50-01 04	V-CD
31-50-01 07	V-CD
31-50-01 08	V-CD
31-50-01 09	V-CD
31-50-01 14	V-CD
99-913	
27-33-00 05	AF-CA
27-33-00 05	*AF-CD*
27-33-00 05	AG-CA
27-33-00 05	AG-CD
27-33-00 05	AJ-CA
27-33-00 05	AJ-CD
27-33-00 07	AF-CA
27-33-00 07	AF-CD
27-33-00 07	AG-CA
27-33-00 07	AG-CD
27-33-00 07	AJ-CA
27-33-00 07	AJ-CD
99-923	
31-50-05 03	D-WX
99-930	
27-33-00 05	AD-CA
27-33-00 05	AD-CD
27-33-00 05	AE-CA
27-33-00 05	AE-CD
27-33-00 05	AH-CA
27-33-00 05	AH-CD
27-33-00 07	AD-CA
27-33-00 07	AD-CD
27-33-00 07	AE-CA
27-33-00 07	AE-CD
27-33-00 07	AH-CA
27-33-00 07	AH-CD
31-50-05 03	A-WX
31-50-05 03	B-WX
31-50-05 03	C-WX

CHAPTER

21

AIR CONDITIONING

CHAPTER 21 - AIR CONDITIONING

TABLE OF CONTENTS

SUBJECT	CHAPTER SECTION UNIT	FIGURE	EFFECT
DISTRIBUTION	21-20-00		
ROOF/FLOOR VALVE AND RECIRCULATING FAN	21-20-10	3	091276

CHAPTER 21 - AIR CONDITIONING

TABLE OF CONTENTS

SUBJECT	CHAPTER SECTION UNIT	FIGURE	EFFECT
PRESSURIZATION CONTROL	21-30-00		
CABIN PRESSURISATION CONTROL FAN	21-30-10	2	091093
			095096
			098101
CABIN PRESSURISATION CONTROL FAN	21-30-10	4	094094
			097097
			102276
DE-PRESSURIZATION	21-31-00		
CABIN DEPRESSURISATION	21-31-10	7	091276

CHAPTER 21 - AIR CONDITIONING

TABLE OF CONTENTS

SUBJECT	CHAPTER SECTION UNIT	FIGURE	EFFECT
TEMPERATURE CONTROL	21-60-00		
CABIN AIR TEMPERATURE CONTROL	21-60-10	8	091093
			095096
			098099
CABIN AIR TEMPERATURE CONTROL	21-60-10	10	100101
CABIN AIR TEMPERATURE CONTROL	21-60-10	11	094094
			097097
			102108
			110115
			117119
			121164
			166166
			168179
			181185
			187189
			191193
			195207
			209209
			212218
			220221
			223223
			225225
			229232
			234234
			236236
			238257
			259276
CABIN TEMPERATURE INDICATOR	21-60-20	2	091099
CABIN TEMPERATURE INDICATOR	21-60-20	3	100185
			187207
			209209
			211225
			228232
			234234
			236236
			238276

CH-SECT-UNIT-FIG	PAGE NO.	DATE
*21	1	AUG 31/03
*21	2	AUG 31/03
*21	3	AUG 31/03
21-20-00	1	MAY 31/02
21-20-10- 3	0	NOV 30/02
21-20-10- 3	1	MAY 31/02
21-20-10- 3	2	MAY 31/02
21-20-10- 3	3	MAY 31/02
21-30-00	1	MAY 31/02
21-30-10- 2	0	NOV 30/02
21-30-10- 2	1	MAY 31/02
21-30-10- 2	2	MAY 31/02
21-30-10- 4	0	NOV 30/02
21-30-10- 4	1	MAY 31/02
21-30-10- 4	2	MAY 31/02
21-31-00	1	MAY 31/02
21-31-10- 7	0	NOV 30/02
21-31-10- 7	1	NOV 30/02
21-31-10- 7	2	MAY 31/02
21-31-10- 7	3	MAY 31/02
21-31-10- 7	4	MAY 31/02
*21-31-10- 7	5	AUG 31/03
21-60-00	1	MAY 31/02
21-60-10- 8	0	NOV 30/02
21-60-10- 8	0A	MAY 31/02
21-60-10- 8	0B	MAY 31/02
21-60-10- 8	1	MAY 31/02
21-60-10- 8	2	MAY 31/02
21-60-10- 8	3	MAY 31/02
21-60-10- 8	4	MAY 31/02
21-60-10- 8	5	MAY 31/02
21-60-10- 8	6	MAY 31/02
21-60-10- 8	7	MAY 31/02
21-60-10-10	0	NOV 30/02
21-60-10-10	0A	MAY 31/02
21-60-10-10	0B	NOV 30/02
21-60-10-10	1	MAY 31/02
21-60-10-10	2	MAY 31/02
21-60-10-10	3	MAY 31/02
21-60-10-10	4	MAY 31/02
21-60-10-10	5	MAY 31/02
21-60-10-10	6	MAY 31/02
21-60-10-10	7	MAY 31/02
21-60-10-10	8	MAY 31/02
21-60-10-10	9	MAY 31/02
21-60-10-11	0	NOV 30/02
21-60-10-11	0A	NOV 30/02
21-60-10-11	0B	NOV 30/02
21-60-10-11	0C	NOV 30/02
21-60-10-11	1	MAY 31/02
21-60-10-11	2	MAY 31/02
21-60-10-11	3	MAY 31/02
21-60-10-11	4	MAY 31/02
21-60-10-11	5	MAY 31/02
21-60-10-11	6	MAY 31/02
21-60-10-11	7	MAY 31/02
21-60-10-11	8	MAY 31/02
21-60-10-11	9	MAY 31/02
21-60-10-11	10	MAY 31/02
21-60-10-11	11	MAY 31/02
21-60-10-11	12	MAY 31/02
21-60-10-11	13	MAY 31/02
21-60-10-11	14	MAY 31/02
21-60-10-11	15	MAY 31/02
21-60-10-11	16	MAY 31/02
21-60-10-11	17	MAY 31/02
21-60-10-11	18	MAY 31/02
21-60-10-11	19	MAY 31/02
21-60-10-11	20	MAY 31/02
21-60-10-11	21	MAY 31/02
21-60-10-11	22	MAY 31/02
21-60-10-11	23	MAY 31/02
21-60-10-11	24	MAY 31/02
21-60-20- 2	0	NOV 30/02
21-60-20- 2	1	MAY 31/02
21-60-20- 2	2	MAY 31/02
21-60-20- 3	0	NOV 30/02
21-60-20- 3	1	MAY 31/02
21-60-20- 3	2	MAY 31/02
21-60-20- 3	3	MAY 31/02
21-60-20- 3	4	MAY 31/02

*THE ASTERISK INDICATES PAGES CHANGED OR ADDED BY THE CURRENT REVISION

DISTRIBUTION

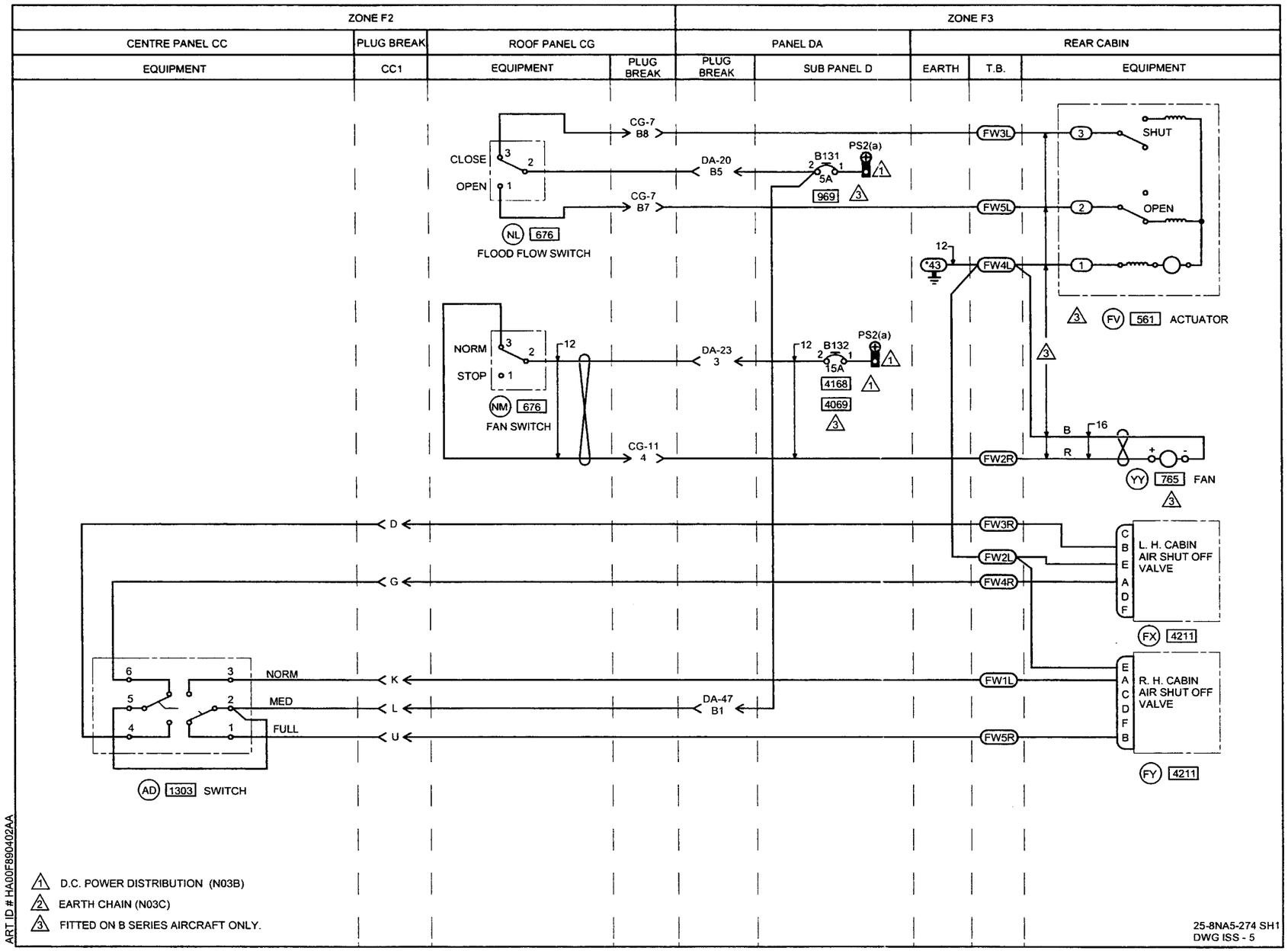
ZONE F2
ZONE F3
CENTRE PANEL CC
PLUG BREAK
ROOF PANEL CG
PANEL DA
REAR CABIN
EQUIPMENT
CC1
EQUIPMENT
PLUG BREAK
PLUG BREAK
SUB PANEL D
EARTH
T.B.
EQUIPMENT
CG-7 B8
CLOSE
OPEN
DA-20 B5
B131
PS2(a)
5A
969
CG-7 B7
NL 676
FLOOD FLOW SWITCH
FW3L
FW5L
FW4L
SHUT
OPEN
FV 561 ACTUATOR
NORM
STOP
NM 676
FAN SWITCH
DA-23 3
B132
15A
4168
4069
CG-11 4
FW2R
B
R
YY 765 FAN
D
G
FW3R
FW2L
FW4R
L. H. CABIN AIR SHUT OFF VALVE
FX 4211
NORM
MED
FULL
K
L
U
DA-47 B1
FW1L
FW5R
R. H. CABIN AIR SHUT OFF VALVE
FY 4211
AD 1303 SWITCH
D.C. POWER DISTRIBUTION (N03B)
EARTH CHAIN (N03C)
FITTED ON B SERIES AIRCRAFT ONLY.
ART ID # HA00F890402AA
25-8NA5-274 SH1
DWG ISS - 5

IDENT	PART NUMBER	1234567 NOMENCLATURE	EFFECT FROM TO	UNITS PER ASSY
		ROOF/FLOOR VALVE AND RECIRCULATING FAN	091276	
	25-8NA5-274	WIRING DIAGRAM- (MOD 253149C) (MOD 25F505A)		RF
AD-CC	2TP1-10	.SWITCH- (VK6596)	091116	1
AD-CC	2TP1-10M	.SWITCH- (VK6596)	117276	1
B131-DAD	483TCG11J25-5A	.CIRCUIT BREAKER-5AMP (VU0091)		1
B132-DAD	25-8NF2217-15	.CIRCUIT BREAKER-15AMP (ALTERED FROM 483-96TCK14-15A (VU0091))		1
CC1-P	6026-20-41PN	.CONNECTOR-PLUG (VK4161) (OPT 6026-20-41PN08 (VK0316)) (OPT 6026-20-41PNCONDB (VK1793)) (OPT 6026-20-41PNCOND1 (VK1100)) (USED WITH BACKSHELL: 602GB129-20-1 (VK1100) (OPT GTR62-20NACS1 (VU0419)))		1
CC1-R	BAEREF000003123	.CONNECTOR-SOCKET (6027-20-41SNCONDB (VK1793))		1
CG11-P	MTCR161-04P	.CONNECTOR-PIN (VK1010)		1
CG11-R	MTCR101-04S	.CONNECTOR-SOCKET (VK1010)		1
CG7-P	MTC100YH2-009	.SHELL-PLUG (VK1010) (USED WITH WAFERS: TYPE A, MTC100KT2-1101 TYPE B, MTC100KT2-1102)	091254	1
CG7-P	MTC100YH2-009	.SHELL-PLUG (VK1010) (USED WITH INSERTS: PRIMARY MTC100YC1-001 SECONDARY MTC100YC1-002)	255276	1
CG7-R	MTC100YH2-010	.SHELL-RECEPTACLE (VK1010) (USED WITH WAFERS: TYPE A, MTC100KT2-1103 TYPE B, MTC100KT2-1104)	091254	1
		MISSING ITEM NO. NOT APPLICABLE		

– ITEM NOT ILLUSTRATED

IDENT	PART NUMBER	1234567 NOMENCLATURE	EFFECT FROM TO	UNITS PER ASSY
CG7-R	MTC100YH2-010	.SHELL-RECEPTACLE (VK1010) (USED WITH INSERTS: PRIMARY MTC100YC1-003 SECONDARY MTC100YC1-004)	255276	1
DA20-P	MTC100YH2-009	.SHELL-PLUG (VK1010) (USED WITH WAFERS: TYPE A, MTC100KT2-1101 TYPE B, MTC100KT2-1102)	091254	1
DA20-P	MTC100YH2-009	.SHELL-PLUG (VK1010) (USED WITH INSERTS: PRIMARY MTC100YC1-001 SECONDARY MTC100YC1-002)	255276	1
DA20-R	MTC100YH2-010	.SHELL-RECEPTACLE (VK1010) (USED WITH WAFERS: TYPE A, MTC100KT2-1103 TYPE B, MTC100KT2-1104)	091254	1
DA20-R	MTC100YH2-010	.SHELL-RECEPTACLE (VK1010) (USED WITH INSERTS: PRIMARY MTC100YC1-003 SECONDARY MTC100YC1-004)	255276	1
DA23-P	MTCR161-04P	.CONNECTOR-PIN (VK1010)		1
DA23-R	MTCR101-04S	.CONNECTOR-SOCKET (VK1010)		1
DA47-P	MTC100YH1-003	.SHELL-PLUG (VK1010) (USED WITH WAFERS: TYPE A, MTC100KT1-1101 TYPE B, MTC100KT1-1102)	091254	1
DA47-P	MTC100YH1-003	.SHELL-PLUG (VK1010) (USED WITH INSERT: MTC100YC1-005)	255276	1
DA47-R	MTC100YH1-004	.SHELL-RECEPTACLE (VK1010) (USED WITH WAFERS: TYPE A, MTC100KT1-1103 TYPE B, MTC100KT1-1104)	091254	1
DA47-R	MTC100YH1-004	.SHELL-RECEPTACLE (VK1010) (USED WITH INSERT: MTC100YC1-006)	255276	1
FV	AE4559MK1	.ACTUATOR- (VK4358)		1
		MISSING ITEM NO. NOT APPLICABLE		

– ITEM NOT ILLUSTRATED

IDENT	PART NUMBER	1234567 NOMENCLATURE	EFFECT FROM TO	UNITS PER ASSY
FW	HWBUN1146D58	.TERMINAL BLOCK- (VK0574)		1
FX	HTE9178	.AIR SHUT OFF VALVE- (VK2617) (USED WITH CONNECTOR: 6026-10-6SNCONDD (VK1793))		1
FY	HTE9178	.AIR SHUT OFF VALVE- (VK2617) (USED WITH CONNECTOR: 6026-10-6SNCONDD (VK1793))		1
NL-CG	1TP1-3	.SWITCH- (VK6596)	091116	1
NL-CG	1TP1-3M	.SWITCH- (VK6596)	117276	1
NM-CG	1TP1-3	.SWITCH- (VK6596)	091116	1
NM-CG	1TP1-3M	.SWITCH- (VK6596)	117276	1
YY	45C3111	.FAN- (VK7776)	091207 209209 211225 228276	1
YY	25-8NF4497-1	.FAN-MODIFIED (ALTERED FROM 45C3111 (VK7776))	208208 210210 226227	1
		MISSING ITEM NO. NOT APPLICABLE		

– ITEM NOT ILLUSTRATED

PRESSURIZATION CONTROL

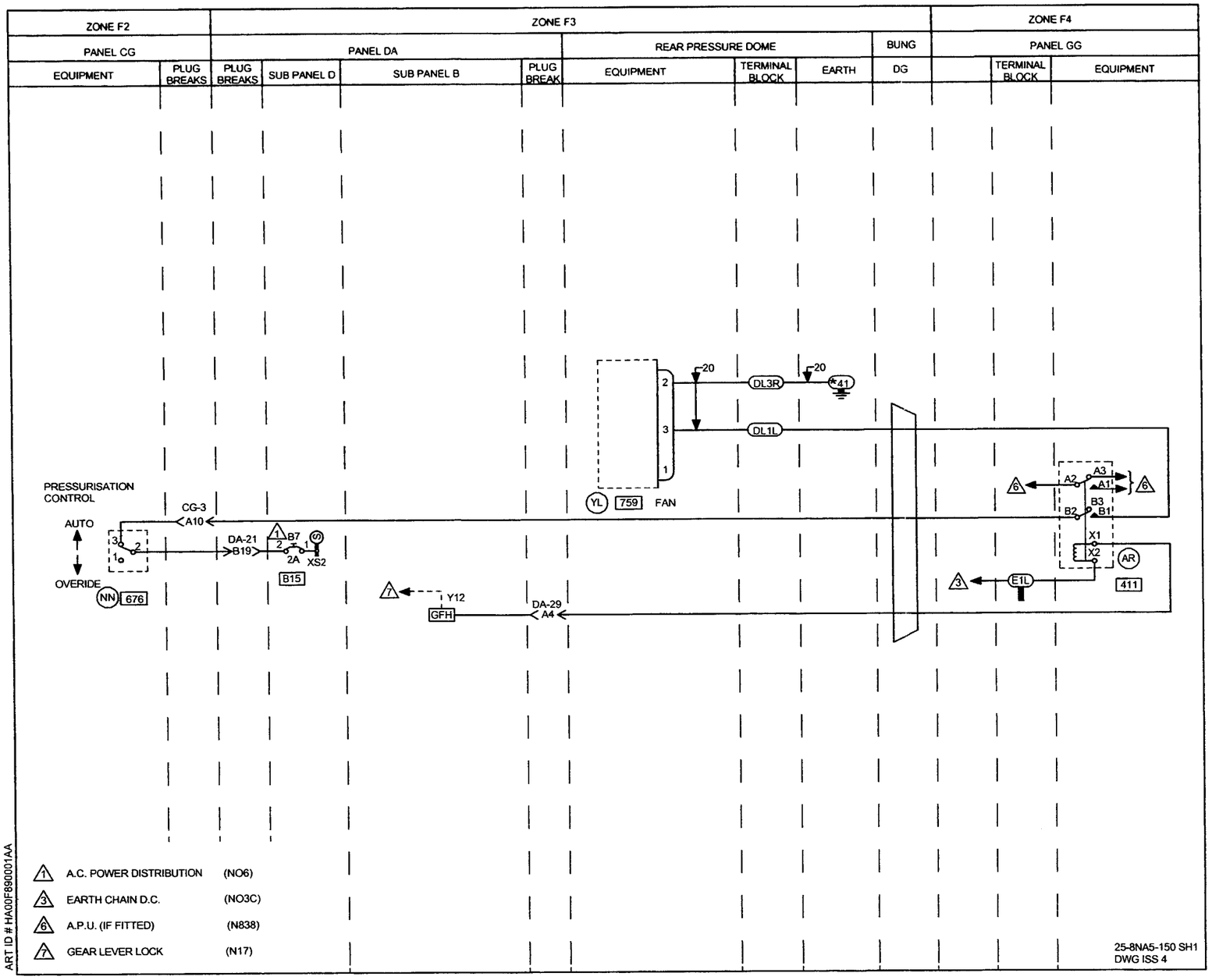
ZONE F2
ZONE F3
ZONE F4
PANEL CG
PANEL DA
REAR PRESSURE DOME
BUNG
PANEL GG
EQUIPMENT
PLUG BREAKS
PLUG BREAKS
SUB PANEL D
SUB PANEL B
PLUG BREAK
EQUIPMENT
TERMINAL BLOCK
EARTH
DG
TERMINAL BLOCK
EQUIPMENT
20
20
DL3R
41
DL1L
YL
759
FAN
PRESSURISATION CONTROL
AUTO
OVERIDE
NN
676
CG-3
A10
DA-21
B19
B7
2A
XS2
B15
Y12
GFH
DA-29
A4
A2
A3
A1
B2
B3
B1
X1
X2
AR
411
E1L
A.C. POWER DISTRIBUTION (NO6)
EARTH CHAIN D.C. (NO3C)
A.P.U. (IF FITTED) (N838)
GEAR LEVER LOCK (N17)
ART ID # HA00F890001AA
25-8NA5-150 SH1
DWG ISS 4

IDENT	PART NUMBER	1234567 NOMENCLATURE	EFFECT FROM TO	UNITS PER ASSY
		CABIN PRESSURISATION CONTROL FAN	091093 095096 098101	
	25-8NA5-150	WIRING DIAGRAM- (MOD 253149C)		RF
AR-GG	9330-4026	.RELAY- (VK6265)		1
B7-DAD	483TCG11J25-2A	.CIRCUIT BREAKER-2A (VU0091)		1
CG3-P	MTC100YH1-003	.SHELL-PLUG (VK1010) (USED WITH WAFERS: TYPE A, MTC100KT1-1101 DUMMY, MTCX1X100-100)		1
CG3-R	MTC100YH1-004	.SHELL-RECEPTACLE (VK1010) (USED WITH WAFERS: TYPE A, MTC100KT1-1103 DUMMY, MTCX1X100-100)		1
DA21-P	MTC100YH2-009	.SHELL-PLUG (VK1010) (USED WITH WAFERS: TYPE A, MTC100KT2-1101 TYPE B, MTC100KT2-1102)		1
DA21-R	MTC100YH2-010	.SHELL-RECEPTACLE (VK1010) (USED WITH WAFERS: TYPE A, MTC100KT2-1103 TYPE B, MTC100KT2-1104)		1
DA29-P	MTC100YH1-003	.SHELL-PLUG (VK1010) (USED WITH WAFERS: TYPE A, MTC100KT1-1101 TYPE B, MTC100KT1-1102)		1
DA29-R	MTC100YH1-004	.SHELL-RECEPTACLE (VK1010) (USED WITH WAFERS: TYPE A, MTC100KT1-1103 TYPE B, MTC100KT1-1104		1
DG	422255-8	.BUNG- (VK1793)		1
DL	HWBUN1146D10B	.TERMINAL BLOCK- (VK0574)		1
E-GG	HWBUN1146D10B	.TERMINAL BLOCK- (VK0574)		1
NN-CG	1TP1-3	.SWITCH- (VK6596) (PRE MOD 253210A)		1
		MISSING ITEM NO. NOT APPLICABLE		

– ITEM NOT ILLUSTRATED

IDENT	PART NUMBER	1234567 NOMENCLATURE	EFFECT FROM TO	UNITS PER ASSY
NN-CG	1TP1-3M	.SWITCH- (VK6596) (MOD 253210A)		1
YL	132322-2-1	.FAN-VENTURI (UNIT EXCHANGE ITEM) (V70210) (USED WITH CONNECTOR MS24266R128-3S)		1
Y12-DAB	MRTB20E57-111	.TERMINAL JUNCTION MODULE- (V14283)		1
		MISSING ITEM NO. NOT APPLICABLE		

– ITEM NOT ILLUSTRATED

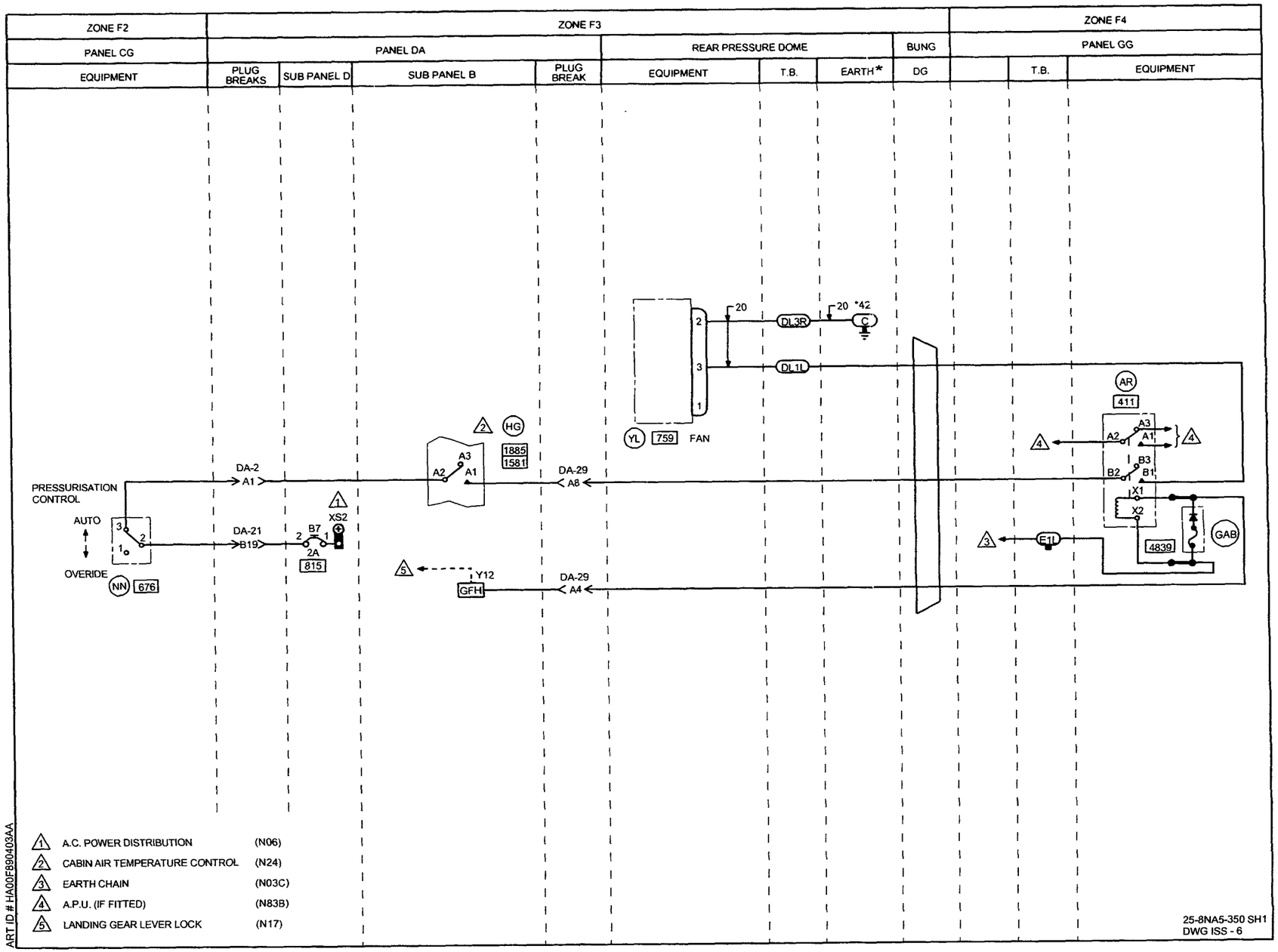
ZONE F2
ZONE F3
ZONE F4
PANEL CG
PANEL DA
REAR PRESSURE DOME
BUNG
PANEL GG
EQUIPMENT
PLUG BREAKS
SUB PANEL D
SUB PANEL B
PLUG BREAK
EQUIPMENT
T.B.
EARTH*
DG
T.B.
EQUIPMENT
20
20 *42
DL3R
C
DL1L
2
3
1
YL
759
FAN
HG
1885
1581
A3
A2
A1
DA-2
A1
DA-29
A8
PRESSURISATION CONTROL
AUTO
OVERIDE
NN
676
DA-21
B19
B7
2A
815
XS2
Y12
GFH
DA-29
A4
AR
411
A3
A2
A1
B3
B2
B1
X1
X2
4839
GAB
E1L
ART ID # HA00F890403AA
1 A.C. POWER DISTRIBUTION (N06)
2 CABIN AIR TEMPERATURE CONTROL (N24)
3 EARTH CHAIN (N03C)
4 A.P.U. (IF FITTED) (N83B)
5 LANDING GEAR LEVER LOCK (N17)
25-8NA5-350 SH1
DWG ISS - 6

IDENT	PART NUMBER	1234567 NOMENCLATURE	EFFECT FROM TO	UNITS PER ASSY
		CABIN PRESSURISATION CONTROL FAN	094094 097097 102276	
	25-8NA5-350	WIRING DIAGRAM- (MOD 253201B) (MOD 25F505A)		RF
AR-GG	9330-4026	.RELAY- (VK6265)		1
B7-DAD	483TCG11J25-2A	.CIRCUIT BREAKER-2AMP (VU0091)		1
DA2-P	MTC100YH1-003	.SHELL-PLUG (VK1010) (USED WITH WAFERS: TYPE A, MTC100KT1-1101 TYPE B, MTC100KT1-1102)	094094 097097 102254	1
DA2-P	MTC100YH1-003	.SHELL-PLUG (VK1010) (USED WITH INSERT: MTC100YC1-005)	255276	1
DA2-R	MTC100YH1-004	.SHELL-RECEPTACLE (VK1010) (USED WITH WAFERS: TYPE A, MTC100KT1-1103 TYPE B, MTC100KT1-1104)	094094 097097 102254	1
DA2-R	MTC100YH1-004	.SHELL-RECEPTACLE (VK1010) (USED WITH INSERT: MTC100YC1-006)	255276	1
DA21-P	MTC100YH2-009	.SHELL-PLUG (VK1010) (USED WITH WAFERS: TYPE A, MTC100KT2-1101 TYPE B, MTC100KT2-1102)	094094 097097 102254	1
DA21-P	MTC100YH2-009	.SHELL-PLUG (VK1010) (USED WITH INSERTS: PRIMARY MTC100YC1-001 SECONDARY MTC100YC1-002)	255276	1
DA21-R	MTC100YH2-010	.SHELL-RECEPTACLE (VK1010) (USED WITH WAFERS: TYPE A, MTC100KT2-1103 TYPE B, MTC100KT2-1104)	094094 097097 102254	1
DA21-R	MTC100YH2-010	.SHELL-RECEPTACLE (VK1010) (USED WITH INSERTS: PRIMARY MTC100YC1-003 SECONDARY MTC100YC1-004) (MOD 253252A)	255276	1
		MISSING ITEM NO. NOT APPLICABLE		

– ITEM NOT ILLUSTRATED

IDENT	PART NUMBER	1234567 NOMENCLATURE	EFFECT FROM TO	UNITS PER ASSY
DA29-P	MTC100YH1-003	.SHELL-PLUG (VK1010) (USED WITH WAFERS: TYPE A, MTC100KT1-1101 TYPE B, MTC100KT1-1102	094094 097097 102254	1
DA29-P	MTC100YH1-003	.SHELL-PLUG (VK1010) (USED WITH INSERT: MTC100YC1-005)	255276	1
DA29-R	MTC100YH1-004	.SHELL-RECEPTACLE (VK1010) (USED WITH WAFERS: TYPE A, MTC100KT1-1103 TYPE B, MTC100KT1 1104)	094094 097097 102254	1
DA29-R	MTC100YH1-004	.SHELL-RECEPTACLE (VK1010) (USED WITH INSERT: MTC100YC1-006)	255276	1
DG	422255-8	.BUNG- (VK1793)		1
DL	HWBUN1146D10B	.TERMINAL BLOCK- (VK0574)		1
E-GG	HWBUN1146D10B	.TERMINAL BLOCK- (VK0574)		1
HG-DAB	M300-1264	.RELAY- (VK6265) (USED WITH SOCKET: M12883-41-16 (V81349))		1
NN-CG	1TP1-3	.SWITCH- (VK6596)	094094 097097 102116	1
NN-CG	1TP1-3M	.SWITCH- (VK6596)	117276	1
YL	132322-2-1	.FAN-VENTURI (UNIT EXCHANGE ITEM) (V70210) (USED WITH CONNECTOR: MS24266R128-3S (V96906))	094094 097097 102262	1
YL	132322-3-1	.FAN-VENTURI (V70210) (USED WITH CONNECTOR: MS24266R128-3S (V96906)) (POST SB21-142)	263276	1
Y12-DAB	MRTB20E57-111	.TERMINAL JUNCTION MODULE- (V14283)		1
		MISSING ITEM NO. NOT APPLICABLE		

– ITEM NOT ILLUSTRATED

DE-PRESSURIZATION

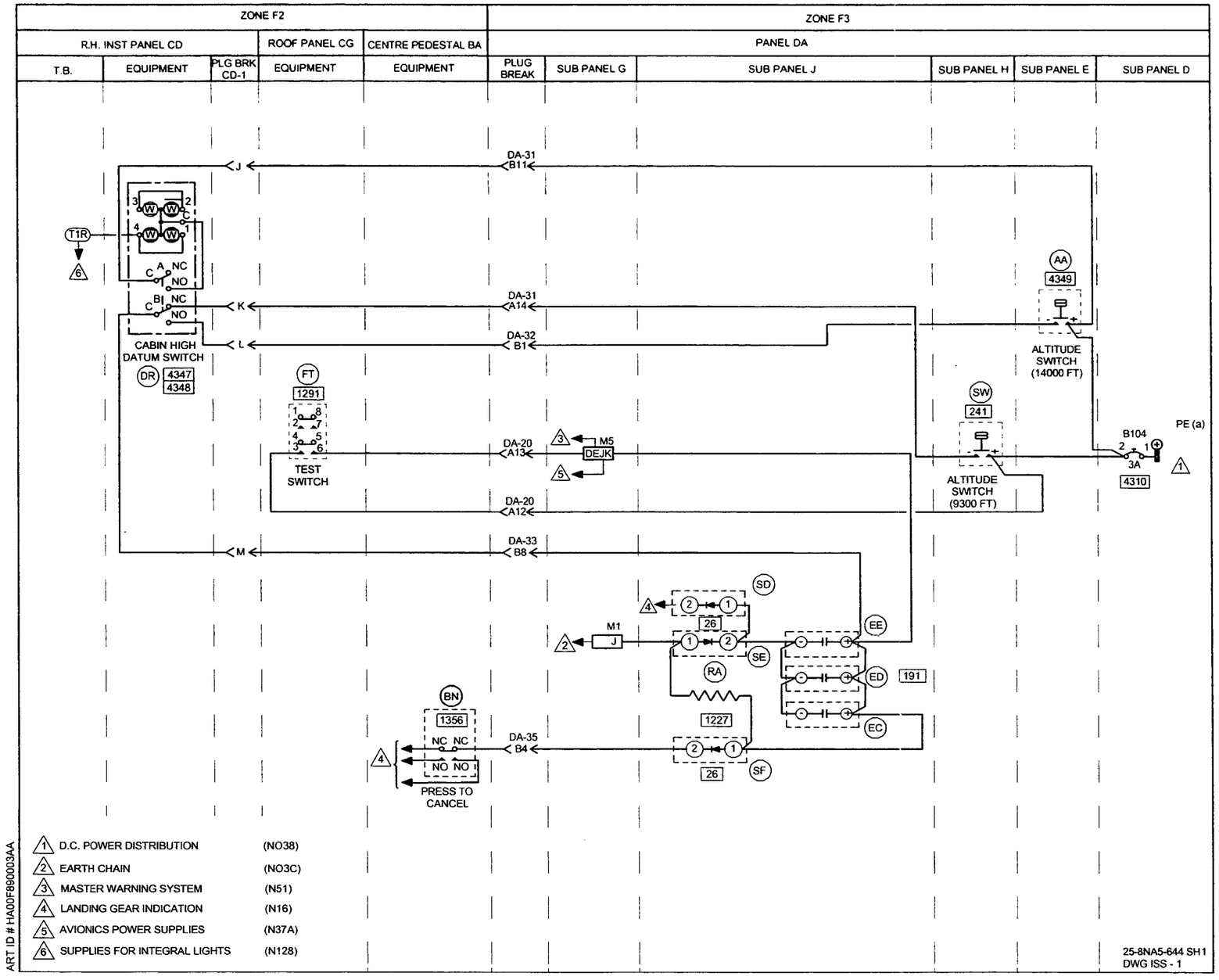
ZONE F2
ZONE F3
R.H. INST PANEL CD
ROOF PANEL CG
CENTRE PEDESTAL BA
PANEL DA
T.B.
EQUIPMENT
PLG BRK CD-1
EQUIPMENT
EQUIPMENT
PLUG BREAK
SUB PANEL G
SUB PANEL J
SUB PANEL H
SUB PANEL E
SUB PANEL D
DA-31 B11
J
T1R
6
CABIN HIGH DATUM SWITCH
DR
4347
4348
K
DA-31 A14
L
DA-32 B1
AA
4349
ALTITUDE SWITCH (14000 FT)
FT
1291
TEST SWITCH
DA-20 A13
M5
DEJK
SW
241
ALTITUDE SWITCH (9300 FT)
B104
3A
4310
PE (a)
DA-20 A12
M
DA-33 B8
SD
26
M1
J
SE
RA
EE
ED
191
EC
1227
BN
1356
NC NC
NO NO
PRESS TO CANCEL
DA-35 B4
SF
26
1 D.C. POWER DISTRIBUTION (NO38)
2 EARTH CHAIN (NO3C)
3 MASTER WARNING SYSTEM (N51)
4 LANDING GEAR INDICATION (N16)
5 AVIONICS POWER SUPPLIES (N37A)
6 SUPPLIES FOR INTEGRAL LIGHTS (N128)
ART ID # HA00F890003AA
25-8NA5-644 SH1
DWG ISS - 1

	IDENT	PART NUMBER	1234567 NOMENCLATURE	EFFECT FROM TO	UNITS PER ASSY
			CABIN DEPRESSURISATION	091276	
R		25-8NA5-644	WIRING DIAGRAM-		RF
R			(MOD 259747A)		
R			(PRE MOD 25F968A)		
	AA-DAE	1103KSDBU2	.SWITCH-		1
			(VK0802)		
	BN-BA	25-8NF225A	.SWITCH ASSY-		1
			(COMPRISING OF:		
			SWITCH 601-4300		
			(V81579))		
	B104-DAD	483TCG11J25-3A	.CIRCUIT BREAKER-3AMP		1
			(VU0091)		
	CD1-P	BAEREF000003145	.CONNECTOR-SOCKET		1
			(6027-14-19SNCONDB)		
			(VK1793)		
	CD1-R	BAEREF000003143	.CONNECTOR-PIN		1
			(6026-14-19PNCONDB)		
			(VK1793)		
	DA20-P	MTC100YH2-009	.SHELL-PLUG	091254	1
			(VK1010)		
			(USED WITH WAFERS:		
			TYPE A, MTC100KT2-1101		
			TYPE B, MTC100KT2-1102)		
	DA20-P	MTC100YH2-009	.SHELL-PLUG	255276	1
			(VK1010)		
			(USED WITH INSERTS:		
			PRIMARY MTC100YC1-001		
			SECONDARY MTC100YC1-002)		
	DA20-R	MTC100YH2-010	.SHELL-RECEPTACLE	091254	1
			(VK1010)		
			(USED WITH WAFERS:		
			TYPE A, MTC100KT2-1103		
			TYPE B, MTC100KT2-1104)		
	DA20-R	MTC100YH2-010	.SHELL-RECEPTACLE	255276	1
			(VK1010)		
			(USED WITH INSERTS:		
			PRIMARY MTC100YC1-003		
			SECONDARY MTC100YC1-004)		
	DA31-P	MTC100YH2-009	.SHELL-PLUG	091254	1
			(VK1010)		
			(USED WITH WAFERS:		
			TYPE A,MTC100KT2-1101		
			TYPE B,MTC100KT2-1102)		
	DA31-P	MTC100YH2-009	.SHELL-PLUG	255276	1
			(VK1010)		
			(USED WITH INSERTS:		
			PRIMARY MTC100YC1-001		
			SECONDARY MTC100YC1-002)		
			MISSING ITEM NO. NOT APPLICABLE		

– ITEM NOT ILLUSTRATED

IDENT	PART NUMBER	1234567 NOMENCLATURE	EFFECT FROM TO	UNITS PER ASSY
DA31-R	MTC100YH2-010	.SHELL-RECEPTACLE (VK1010) (USED WITH WAFERS: TYPE A,MTC100KT2-1103 TYPE B,MTC100KT2-1104)	091254	1
DA31-R	MTC100YH2-010	.SHELL-RECEPTACLE (VK1010) (USED WITH INSERTS: PRIMARY MTC100YC1-003 SECONDARY MTC100YC1-004)	255276	1
DA32-P	MTC100YH2-009	.SHELL-PLUG (VK1010) (USED WITH WAFERS: TYPE A,MTC100KT2-1101 TYPE B,MTC100KT2-1102)	091254	1
DA32-P	MTC100YH2-009	.SHELL-PLUG (VK1010) (USED WITH INSERTS: PRIMARY MTC100YC1-001 SECONDARY MTC100YC1-002)	255276	1
DA32-R	MTC100YH2-010	.SHELL-RECEPTACLE (VK1010) (USED WITH WAFERS: TYPE A,MTC100KT2-1103 TYPE B,MTC100KT2-1104)	091254	1
DA32-R	MTC100YH2-010	.SHELL-RECEPTACLE (VK1010) (USED WITH INSERTS: PRIMARY MTC100YC1-003 SECONDARY MTC100YC1-004)	255276	1
DA33-P	MTC100YH2-009	.SHELL-PLUG (VK1010) (USED WITH WAFERS: TYPE A,MTC100KT2-1101 TYPE B,MTC100KT2-1102)	091254	1
DA33-P	MTC100YH2-009	.SHELL-PLUG (VK1010) (USED WITH INSERTS: PRIMARY MTC100YC1-001 SECONDARY MTC100YC1-002)	255276	1
DA33-R	MTC100YH2-010	.SHELL-RECEPTACLE (VK1010) (USED WITH WAFERS: TYPE A,MTC100KT2-1103 TYPE B,MTC100KT2-1104)	091254	1
DA33-R	MTC100YH2-010	.SHELL-RECEPTACLE (VK1010) (USED WITH INSERTS: PRIMARY MTC100YC1-003 SECONDARY MTC100YC1-004)	255276	1
		MISSING ITEM NO. NOT APPLICABLE		

– ITEM NOT ILLUSTRATED

IDENT	PART NUMBER	1234567 NOMENCLATURE	EFFECT FROM TO	UNITS PER ASSY
DA35-P	MTC100YH2-009	.SHELL-PLUG (VK1010) (USED WITH WAFERS: TYPE A,MTC100KT2-1101 TYPE B,MTC100KT2-1102)	091254	1
DA35-P	MTC100YH2-009	.SHELL-PLUG (VK1010) (USED WITH INSERTS: PRIMARY MTC100YC1-001 SECONDARY MTC100YC1-002)	255276	1
DA35-R	MTC100YH2-010	.SHELL-RECEPTACLE (VK1010) (USED WITH WAFERS: TYPE A, MTC100KT2-1103 TYPE B, MTC100KT2-1104)	091254	1
DA35-R	MTC100YH2-010	.SHELL-RECEPTACLE (VK1010) (USED WITH INSERTS: PRIMARY MTC100YC1-003 SECONDARY MTC100YC1-004)	255276	1
DR-CD	99-623	.SWITCH MODULE- (V32245)		1
EC-DAJ	CE216DE	.CAPACITOR- (VK0422)	091109	1
EC-DAJ	JE102BKV	.CAPACITOR- (VK1672) (USED WITH CLIP: AS2294-4) (PRE MOD 25E127A) (FOR SPARES PROCURE NLW25-50 (V8Y544))	110276	1
EC-DAJ	NLW25-50	.CAPACITOR- (V8Y544) (USED WITH CLIP: AS2294-2) (MOD 25E127A) (FOR SPARES PROCURE IN LIEU OF JE102BKV (VK1672))	110276	1
ED-DAJ	CE216DE	.CAPACITOR- (VK0422)	091109	1

MISSING ITEM NO. NOT APPLICABLE

– ITEM NOT ILLUSTRATED

IDENT	PART NUMBER	1234567 NOMENCLATURE	EFFECT FROM TO	UNITS PER ASSY
ED-DAJ	JE102BKV	.CAPACITOR- (VK1672) (USED WITH CLIP: AS2294-4) (PRE MOD 25E127A) (FOR SPARES PROCURE NLW25-50 (V8Y544))	110276	1
ED-DAJ	NLW25-50	.CAPACITOR- (V8Y544) (USED WITH CLIP: AS2294-2) (MOD 25E127A) (FOR SPARES PROCURE IN LIEU OF JE102BKV (VK1672))	110276	1
EE-DAJ	CE216DE	.CAPACITOR- (VK0422)	091109	1
EE-DAJ	JE102BKV	.CAPACITOR- (VK1672) (USED WITH CLIP: AS2294-4) (PRE MOD 25E127A) (FOR SPARES PROCURE NLW25-50 (V8Y544))	110276	1
EE-DAJ	NLW25-50	.CAPACITOR- (V8Y544) (USED WITH CLIP: AS2294-2) (MOD 25E127A) (FOR SPARES PROCURE IN LIEU OF JE102BKV (VK1672))	110276	1
FT-CG	WC1503	.SWITCH- (VK0653)		1
M1-DAG	MRTB20E04-111	.TERMINAL JUNCTION MODULE- (V14283)		1
M5-DAG	MRTB20E57-111	.TERMINAL JUNCTION MODULE- (V14283)		1
RA-DAJ	5905-99-0140575	.RESISTOR- (VK0064)		1
SD-DAJ	CV7313	.DIODE- (VK0004)		1
SE-DAJ	CV7313	.DIODE- (VK0004)		1
SF-DAJ	CV7313	.DIODE- (VK0004)		1
		MISSING ITEM NO. NOT APPLICABLE		

– ITEM NOT ILLUSTRATED

	IDENT	PART NUMBER	1234567 NOMENCLATURE	EFFECT FROM TO	UNITS PER ASSY
R	SW-DAH	214C40-2-57	.SWITCH- (V02750)		1
R	T-CD	HWBUN1736D6B	.TERMINAL BLOCK- (VK0574) (OPT 72444-026-0)		1
			MISSING ITEM NO. NOT APPLICABLE		

– ITEM NOT ILLUSTRATED

TEMPERATURE CONTROL

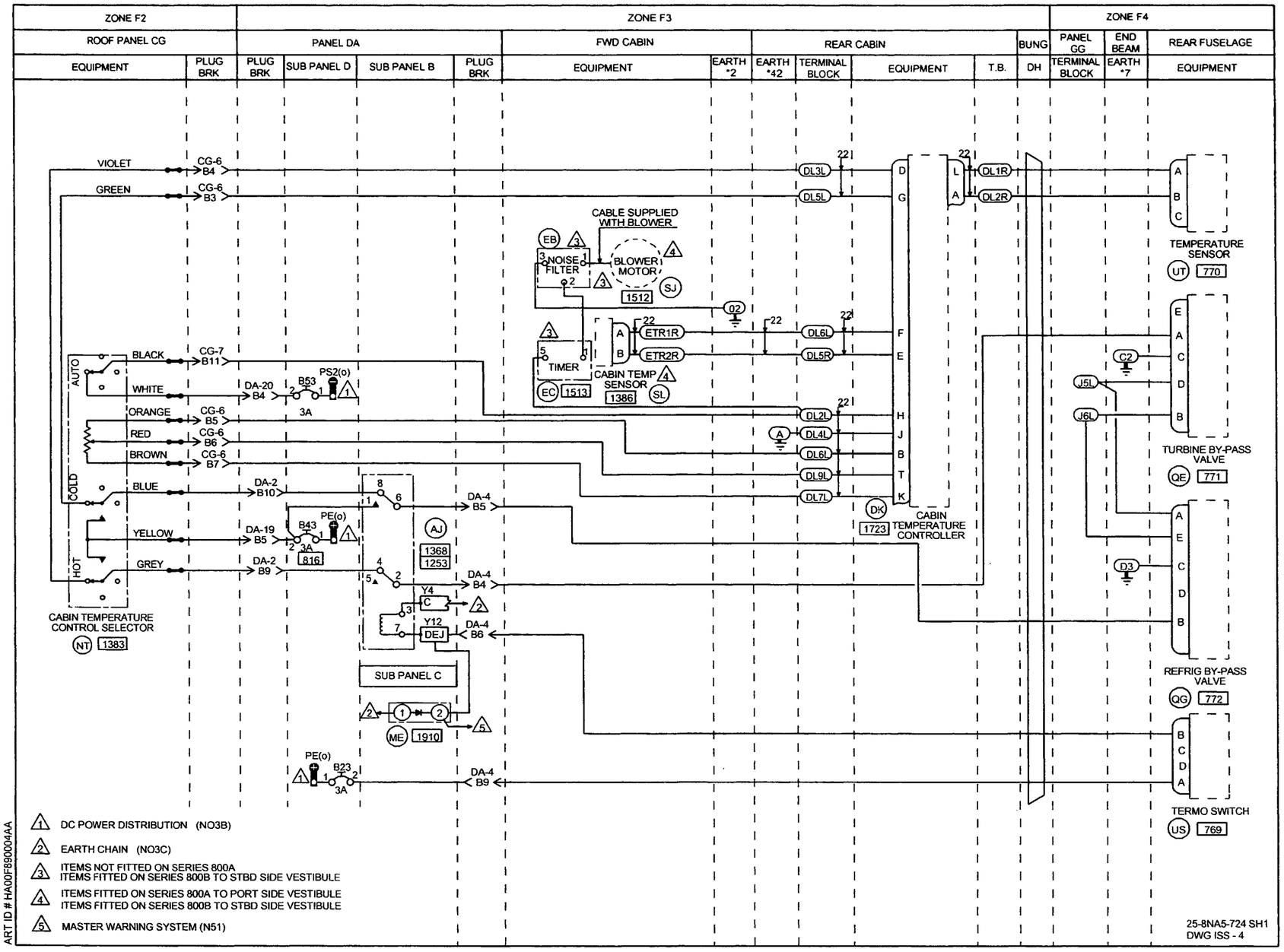
ZONE F2
ZONE F3
ZONE F4
ROOF PANEL CG
PANEL DA
FWD CABIN
REAR CABIN
BUNG
PANEL GG
END BEAM
REAR FUSELAGE
EQUIPMENT
PLUG BRK
SUB PANEL D
SUB PANEL B
EARTH *2
EARTH *42
TERMINAL BLOCK
T.B.
DH
EARTH *7
VIOLET
GREEN
BLACK
WHITE
ORANGE
RED
BROWN
BLUE
YELLOW
GREY
AUTO
COLD
HOT
CABIN TEMPERATURE CONTROL SELECTOR
NT 1383
CABLE SUPPLIED WITH BLOWER
NOISE FILTER
BLOWER MOTOR
1512
TIMER
1513
CABIN TEMP SENSOR
1386
CABIN TEMPERATURE CONTROLLER
1723
SUB PANEL C
1910
1368
1253
816
TEMPERATURE SENSOR
UT 770
TURBINE BY-PASS VALVE
QE 771
REFRIG BY-PASS VALVE
QG 772
TERMO SWITCH
US 769
1 DC POWER DISTRIBUTION (NO3B)
2 EARTH CHAIN (NO3C)
3 ITEMS NOT FITTED ON SERIES 800A
ITEMS FITTED ON SERIES 800B TO STBD SIDE VESTIBULE
4 ITEMS FITTED ON SERIES 800A TO PORT SIDE VESTIBULE
ITEMS FITTED ON SERIES 800B TO STBD SIDE VESTIBULE
5 MASTER WARNING SYSTEM (N51)
25-8NA5-724 SH1
DWG ISS - 4
ART ID # HA00F890004AA

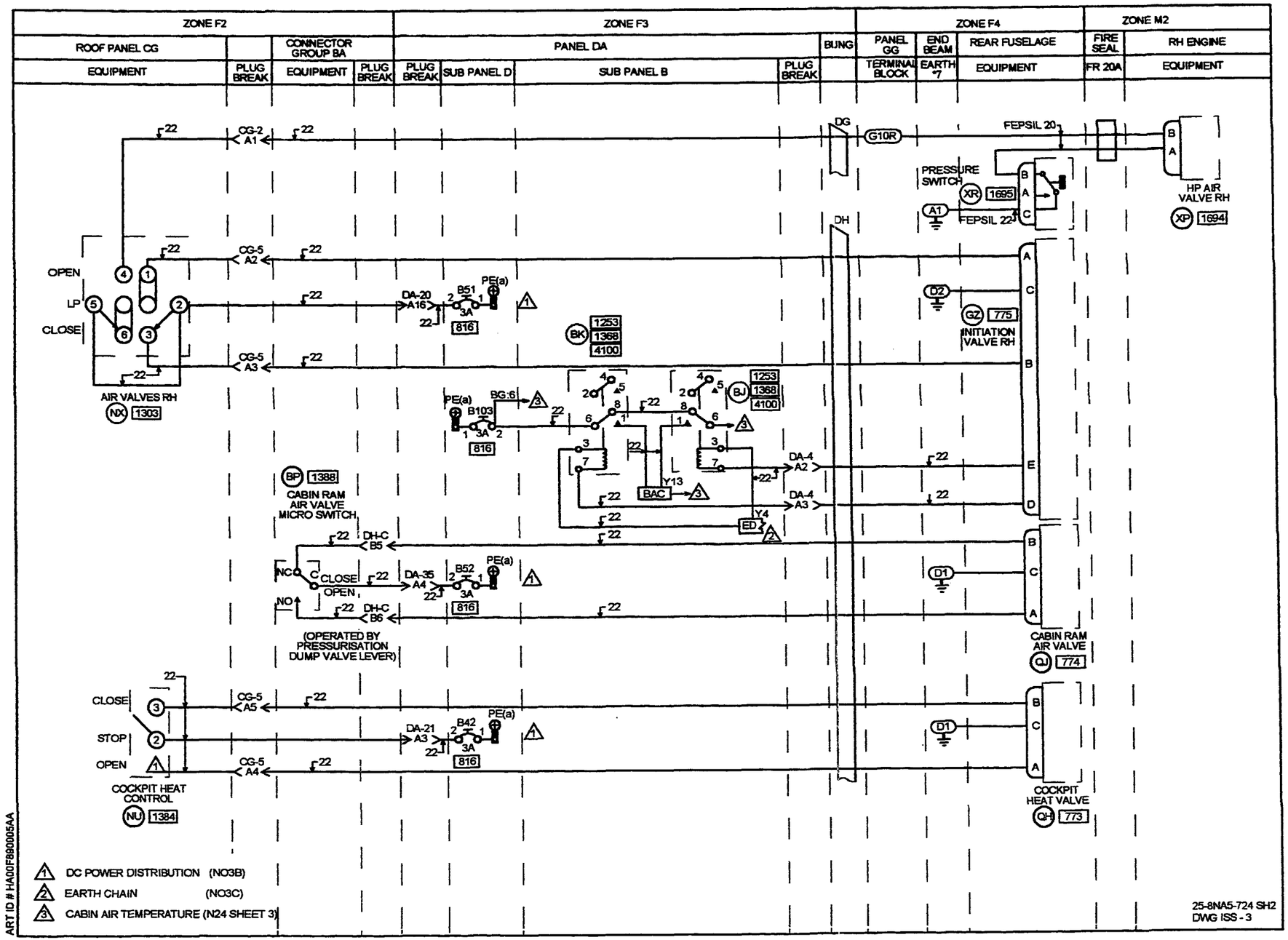
ZONE F2
ROOF PANEL CG
EQUIPMENT
PLUG BREAK
CONNECTOR GROUP BA
EQUIPMENT
PLUG BREAK
ZONE F3
PANEL DA
PLUG BREAK
SUB PANEL D
SUB PANEL B
PLUG BREAK
BUNG
ZONE F4
PANEL GG
TERMINAL BLOCK
END BEAM
EARTH *7
REAR FUSELAGE
EQUIPMENT
ZONE M2
FIRE SEAL
FR 20A
RH ENGINE
EQUIPMENT
DG
G10R
FEPSIL 20
PRESSURE SWITCH
XR 1695
A1
FEPSIL 22
HP AIR VALVE RH
XP 1694
DH
OPEN
LP
CLOSE
CG-2 A1
CG-5 A2
CG-5 A3
AIR VALVES RH
NX 1303
DA-20 A16
B51
PE(a)
816
BK 1253 1368 4100
D2
GZ 775
INITIATION VALVE RH
BG:6
B103
BJ 1253 1368 4100
DA-4 A2
DA-4 A3
BAC
Y13
ED
Y4
BP 1388
CABIN RAM AIR VALVE MICRO SWITCH
DH-C B5
DH-C B6
NC
C
CLOSE
OPEN
NO
DA-35 A4
B52
D1
(OPERATED BY PRESSURISATION DUMP VALVE LEVER)
CABIN RAM AIR VALVE
QJ 774
CG-5 A5
CG-5 A4
STOP
DA-21 A3
B42
COCKPIT HEAT CONTROL
NU 1384
COCKPIT HEAT VALVE
QH 773
1 DC POWER DISTRIBUTION (NO3B)
2 EARTH CHAIN (NO3C)
3 CABIN AIR TEMPERATURE (N24 SHEET 3)
25-8NA5-724 SH2
DWG ISS - 3
ART ID # HA00F880005AA

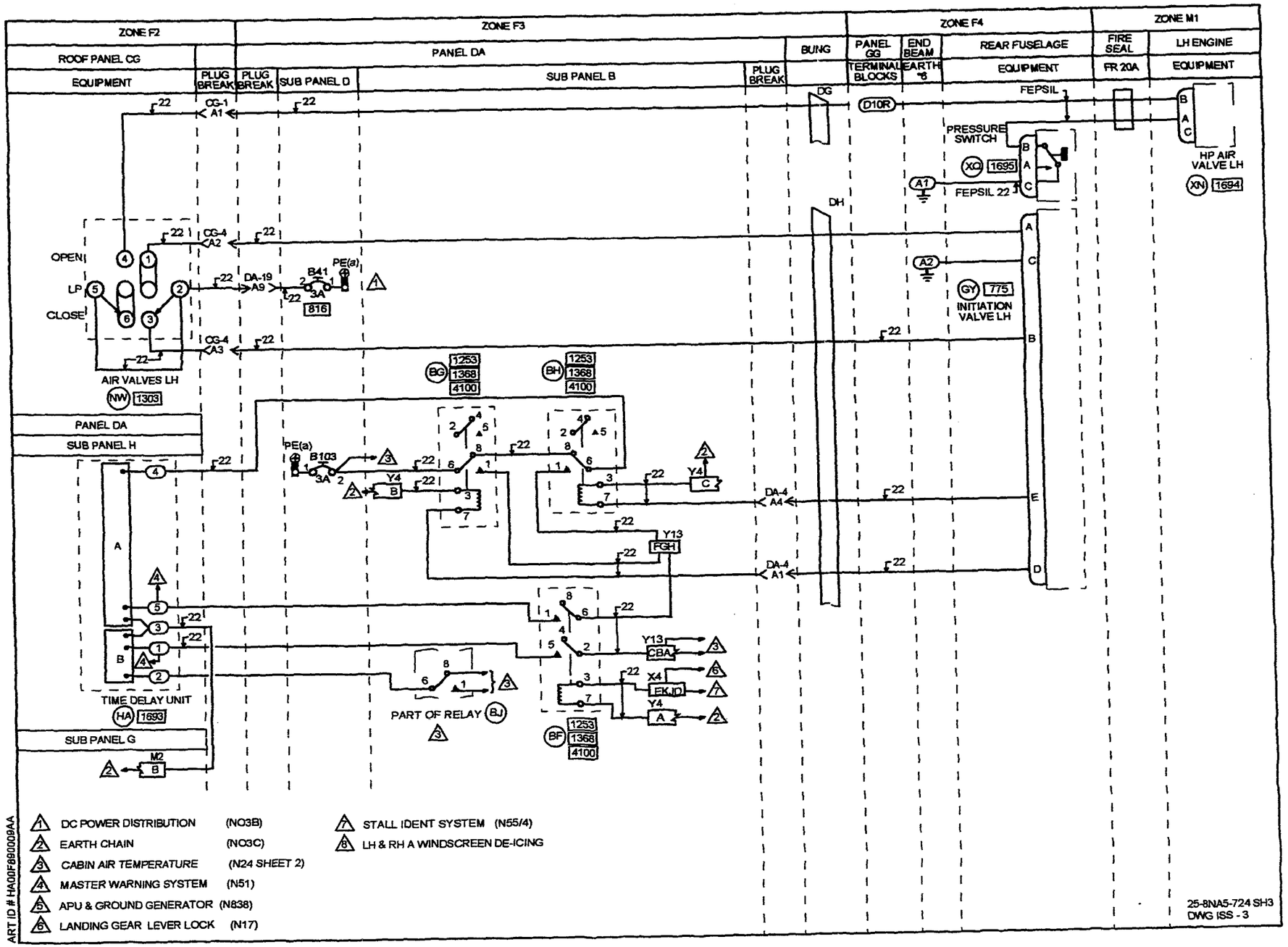
ZONE F2
ZONE F3
ZONE F4
ZONE M1
ROOF PANEL CG
PANEL DA
BUNG
PANEL GG
END BEAM
REAR FUSELAGE
FIRE SEAL
LH ENGINE
EQUIPMENT
PLUG BREAK
SUB PANEL D
SUB PANEL B
TERMINAL BLOCKS
EARTH *6
FR 20A
DG
DH
D10R
FEPSIL
PRESSURE SWITCH
XC 1695
FEPSIL 22
HP AIR VALVE LH
XN 1694
OPEN
LP
CLOSE
AIR VALVES LH
NW 1303
CG-1 A1
CG-4 A2
CG-4 A3
DA-19 A9
B41
816
GY 775
INITIATION VALVE LH
BG 1253 1368 4100
BH 1253 1368 4100
PANEL DA
SUB PANEL H
B103
Y4 B
Y4 C
DA-4 A4
DA-4 A1
Y13 FGH
Y13 CBA
X4 EKJD
Y4 A
TIME DELAY UNIT
HA 1693
PART OF RELAY BJ
BF 1253 1368 4100
SUB PANEL G
M2 B
1 DC POWER DISTRIBUTION (NO3B)
2 EARTH CHAIN (NO3C)
3 CABIN AIR TEMPERATURE (N24 SHEET 2)
4 MASTER WARNING SYSTEM (N51)
5 APU & GROUND GENERATOR (N838)
6 LANDING GEAR LEVER LOCK (N17)
7 STALL IDENT SYSTEM (N55/4)
8 LH & RH A WINDSCREEN DE-ICING
ART ID # HA00F890009AA
25-8NA5-724 SH3
DWG ISS - 3

IDENT	PART NUMBER	1234567 NOMENCLATURE	EFFECT FROM TO	UNITS PER ASSY
		CABIN AIR TEMPERATURE CONTROL	091093 095096 098099	
	25-8NA5-724	WIRING DIAGRAM- (MOD 253149C)		RF
AJ-DAB	HDS8SF3J03	.RELAY- (VK1793) (USED WITH SOCKET: RSE120074 (V58982))		1
BF-DAB	HDS8SF3J03	.RELAY- (VK1793) (USED WITH SOCKET: RSE120074 (V58982))		1
BG-DAB	HDS8SF3J03	.RELAY- (VK1793) (USED WITH SOCKET: RSE120074 (V58982))		1
BH-DAB	HDS8SF3J03	.RELAY- (VK1793) (USED WITH SOCKET: RSE120074 (V58982))		1
BJ-DAB	HDS8SF3J03	.RELAY- (VK1793) (USED WITH SOCKET: RSE120074 (V58982))		1
BK-DAB	HDS8SF3J03	.RELAY- (VK1793) (USED WITH SOCKET: RSE120074 (V58982))		1
BP-BA	BZ2RQ1T04	.SWITCH- (V91929) (OPT (VK6595))		1
B103-DAD	483TCG11J25-3A	.CIRCUIT BREAKER-3AMP (VU0091)		1
B23-DAD	483TCG11J25-3A	.CIRCUIT BREAKER-3AMP (VU0091)		1
B41-DAD	483TCG11J25-3A	.CIRCUIT BREAKER-3AMP (VU0091)		1
B42-DAD	483TCG11J25-3A	.CIRCUIT BREAKER-3AMP (VU0091)		1
B43-DAD	483TCG11J25-3A	.CIRCUIT BREAKER-3AMP (VU0091)		1
B51-DAD	483TCG11J25-3A	.CIRCUIT BREAKER-3AMP (VU0091)		1
		MISSING ITEM NO. NOT APPLICABLE		

– ITEM NOT ILLUSTRATED

IDENT	PART NUMBER	1234567 NOMENCLATURE	EFFECT FROM TO	UNITS PER ASSY
B52-DAD	483TCG11J25-3A	.CIRCUIT BREAKER-3AMP (VU0091)		1
B53-DAD	483TCG11J25-3A	.CIRCUIT BREAKER-3AMP (VU0091)		1
CG1-P	MTC100YH2-009	.SHELL-PLUG (VK1010) (USED WITH WAFERS: TYPE A, MTC100KT2-1101 TYPE B, MTC100KT2-1102)		1
CG1-R	MTC100YH2-010	.SHELL-RECEPTACLE (VK1010) (USED WITH WAFERS: TYPE A, MTC100KT2-1103 TYPE B, MTC100KT2-1104)		1
CG2-P	MTC100YH2-009	.SHELL-PLUG (VK1010) (USED WITH WAFERS: TYPE A, MTC100KT2-1101 TYPE B, MTC100KT2-1102)		1
CG2-R	MTC100YH2-010	.SHELL-RECEPTACLE (VK1010) (USED WITH WAFERS: TYPE A, MTC100KT2-1103 TYPE B, MTC100KT2-1104)		1
CG4-P	MTC100YH1-003	.SHELL-PLUG (VK1010) (USED WITH WAFERS: TYPE A, MTC100KT1-1101 TYPE B, MTC100KT1-1102)		1
CG4-R	MTC100YH1-004	.SHELL-RECEPTACLE (VK1010) (USED WITH WAFERS: TYPE A, MTC100KT1-1103 TYPE B, MTC100KT1-1104)		1
CG5-P	MTC100YH1-003	.SHELL-PLUG (VK1010) (USED WITH WAFERS: TYPE A, MTC100KT1-1101 TYPE B, MTC100KT1-1102)		1
CG5-R	MTC100YH1-004	.SHELL-RECEPTACLE (VK1010) (USED WITH WAFERS: TYPE A, MTC100KT1-1103 TYPE B, MTC100KT1-1104		1
CG6-P	MTC100YH2-009	.SHELL-PLUG (VK1010) (USED WITH WAFERS: TYPE A, MTC100KT2-1101 TYPE B, MTC100KT2-1102)		1
		MISSING ITEM NO. NOT APPLICABLE		

- ITEM NOT ILLUSTRATED

IDENT	PART NUMBER	1234567 NOMENCLATURE	EFFECT FROM TO	UNITS PER ASSY
CG6-R	MTC100YH2-010	.SHELL-RECEPTACLE (VK1010) (USED WITH WAFERS: TYPE A, MTC100KT2-1103 TYPE B, MTC100KT2-1104)		1
CG7-P	MTC100YH2-009	.SHELL-PLUG (VK1010) (USED WITH WAFERS: TYPE A, MTC100KT2-1101 TYPE B, MTC100KT2-1102)		1
CG7-R	MTC100YH2-010	.SHELL-RECEPTACLE (VK1010) (USED WITH WAFERS: TYPE A, MTC100KT2-1103 TYPE B, MTC100KT2-1104)		1
D-GG	HWBUN1146D10B	.TERMINAL BLOCK- (VK0574)		1
DA19-P	MTC100YH2-009	.SHELL-PLUG (VK1010) (USED WITH WAFERS: TYPE A, MTC100KT2-1101 TYPE B, MTC100KT2-1102)		1
DA19-R	MTC100YH2-010	.SHELL-RECEPTACLE (VK1010) (USED WITH WAFERS: TYPE A, MTC100KT2-1103 TYPE B, MTC100KT2-1104)		1
DA2-P	MTC100YH1-003	.SHELL-PLUG (VK1010) (USED WITH WAFERS: TYPE A, MTC100KT1-1101 TYPE B, MTC100KT1-1102)		1
DA2-R	MTC100YH1-004	.SHELL-RECEPTACLE (VK1010) (USED WITH WAFERS: TYPE A, MTC100KT1-1103 TYPE B, MTC100KT1-1104		1
DA20-P	MTC100YH2-009	.SHELL-PLUG (VK1010) (USED WITH WAFERS: TYPE A, MTC100KT2-1101 TYPE B, MTC100KT2-1102)		1
DA20-R	MTC100YH2-010	.SHELL-RECEPTACLE (VK1010) (USED WITH WAFERS: TYPE A, MTC100KT2-1103 TYPE B, MTC100KT2-1104)		1
		MISSING ITEM NO. NOT APPLICABLE		

– ITEM NOT ILLUSTRATED

IDENT	PART NUMBER	1234567 NOMENCLATURE	EFFECT FROM TO	UNITS PER ASSY
DA21-P	MTC100YH2-009	.SHELL-PLUG (VK1010) (USED WITH WAFERS: TYPE A, MTC100KT2-1101 TYPE B, MTC100KT2-1102)		1
DA21-R	MTC100YH2-010	.SHELL-RECEPTACLE (VK1010) (USED WITH WAFERS: TYPE A, MTC100KT2-1103 TYPE B, MTC100KT2-1104)		1
DA35-P	MTC100YH2-009	.SHELL-PLUG (VK1010) (USED WITH WAFERS: TYPE A, MTC100KT2-1101 TYPE B, MTC100KT2-1102)		1
DA35-R	MTC100YH2-010	.SHELL-RECEPTACLE (VK1010) (USED WITH WAFERS: TYPE A, MTC100KT2-1103 TYPE B, MTC100KT2-1104)		1
DA4-P	MTC100YH2-009	.SHELL-PLUG (VK1010) (USED WITH WAFERS: TYPE A, MTC100KT2-1101 TYPE B, MTC100KT2-1102)		1
DA4-R	MTC100YH2-010	.SHELL-RECEPTACLE (VK1010) (USED WITH WAFERS: TYPE A, MTC100KT2-1103 TYPE B, MTC100KT2-1104)		1
DG	422255-8	.BUNG- (VK1793)		1
DH	422254-9	.BUNG- (VK1793)		1
DH-C-P	MTC100YH1-003	.SHELL-PLUG (VK1010) (USED WITH WAFERS: TYPE A, MTC100KT1-1103 TYPE B, MTC100KT1-1104)		1
DH-C-R	MTC100YH1-004	.SHELL-RECEPTACLE (VK1010) (USED WITH WAFERS: TYPE A, MTC100KT1-1101 TYPE B, MTC100KT1-1102)		1
DK	617452-3	.TEMPERATURE CONTROLLER- (UNIT EXCHANGE ITEM) (V70210) (USED WITH CONNECTOR: CPT06E14-18S (VK0690))		1
		MISSING ITEM NO. NOT APPLICABLE		

– ITEM NOT ILLUSTRATED

IDENT	PART NUMBER	1234567 NOMENCLATURE	EFFECT FROM TO	UNITS PER ASSY
DL	HWBUN1146D10B	.TERMINAL BLOCK- (VK0574)		1
EB	UNASSIGNED	.UNASSIGNED-NOISE FILTER (SUPPLIED WITH BLOWER, SJ) (V+1251)		1
EC	25-6NF1453-17	.TIMER		1
ET	HWBUN1146D3B	.TERMINAL BLOCK- (VK0574)		1
G-GG	HWBUN1146D10B	.TERMINAL BLOCK- (VK0574)		1
GY	321292-1	.VALVE- (UNIT EXCHANGE ITEM) (V7X000) (USED WITH CONNECTOR: MS3108R14-5S (V71468) (OPT (VK0316)))		1
GZ	321292-1	.VALVE- (UNIT EXCHANGE ITEM) (V7X000) (USED WITH CONNECTOR: MS3108R14-5S (V71468) (OPT (VK0316)))		1
HA-DAH	25-7NF885A	.TIME DELAY UNIT ASSY- (COMPRISING OF: TERMINAL BLOCK WBUN1193SS5B (VK0574))		1
J-GG	HWBUN1146D10B	.TERMINAL BLOCK- (VK0574)		1
ME-DAC	BYW54	.DIODE- (VK0004)		1
M2-DAG	MRTB20E04-111	.TERMINAL JUNCTION MODULE- (V14283)		1
NT-CG	25-6MC415	.SELECTOR ASSY-TEMPERATURE (COMPRISING OF: SELECTOR 627578-1 (V70210))		1
NU-CG	1TP1-5	.SWITCH- (V91929) (OPT (VK6596))		1
NW-CG	2TP1-10	.SWITCH- (V91929) (OPT (VK6596))		1
NX-CG	2TP1-10	.SWITCH- (V91929) (OPT (VK6596))		1
		MISSING ITEM NO. NOT APPLICABLE		

– ITEM NOT ILLUSTRATED

IDENT	PART NUMBER	1234567 NOMENCLATURE	EFFECT FROM TO	UNITS PER ASSY
QE	321776-1-1	.VALVE- (UNIT EXCHANGE ITEM) (V7X000) (USED WITH CONNECTOR: MS3106R14S5S (V71468) (OPT (VK0316)))		1
QG	104968	.VALVE- (UNIT EXCHANGE ITEM) (V7X000) (USED WITH CONNECTOR: MS3106R14S5S (V71468) (OPT (VK0316)))		1
QH	104568-3	.VALVE- (V7X000) (USED WITH CONNECTOR: MS3108R10SL3S (V71468) (OPT (VK0316)))		1
QJ	321262-1	.VALVE- (UNIT EXCHANGE ITEM) (V7X000) (USED WITH CONNECTOR: MS3108R14-5S (V71468) (OPT (VK0316)))		1
SJ	25-7FC379-97A	.BLOWER UNIT		1
SL	607148-1	.TEMPERATURE SENSOR- (V70210) (USED WITH CONNECTOR: MS3126E10-6S (V71468) (OPT (VK0316)))		1
US	21346-5	.SWITCH- (V7X000) (USED WITH CONNECTOR: MS3108R10SL4S (V71468) (OPT (VK0316))) (PRE MOD 253293A) (FOR SPARES PROCURE 21346-6)		1
		MISSING ITEM NO. NOT APPLICABLE		

- ITEM NOT ILLUSTRATED

IDENT	PART NUMBER	1234567 NOMENCLATURE	EFFECT FROM TO	UNITS PER ASSY
US	21346-6	.SWITCH- (V7X000) (USED WITH CONNECTOR: MS3108R10SL4S (V71468) (OPT (VK0316))) (MOD 253293A) (FOR SPARES PROCURE IN LIEU OF 21346-5)		1
UT	548408-1	.TEMPERATURE SENSOR- (V7X000) (USED WITH CONNECTOR: MS3108R10SL3S (V71468) (OPT (VK0316)))		1
XN	B01A2-14128A	.VALVE- (VU1585) (USED WITH CONNECTOR: MS3126F8-3S (V71468) (OPT (VK0316)))		1
XP	B01A2-14128A	.VALVE- (VU1585) (USED WITH CONNECTOR: MS3126F8-3S (V71468) (OPT (VK0316)))		1
XQ	HE690011	.SWITCH- (VK2617) (USED WITH CONNECTOR: M83723-13R08-33N (VK1793))		1
XR	HE690011	.SWITCH- (VK2617) (USED WITH CONNECTOR: M83723-13R08-33N (VK1793))		1
X4-DAB	MRTB20E57-111	.TERMINAL JUNCTION MODULE- (V14283)		1
Y12-DAB	MRTB20E57-111	.TERMINAL JUNCTION MODULE- (V14283)		1
Y13-DAB	MRTB20E57-111	.TERMINAL JUNCTION MODULE- (V14283)		1
Y4-DAB	MRTB20E04-111	.TERMINAL JUNCTION MODULE- (V14283)		1
		MISSING ITEM NO. NOT APPLICABLE		

– ITEM NOT ILLUSTRATED

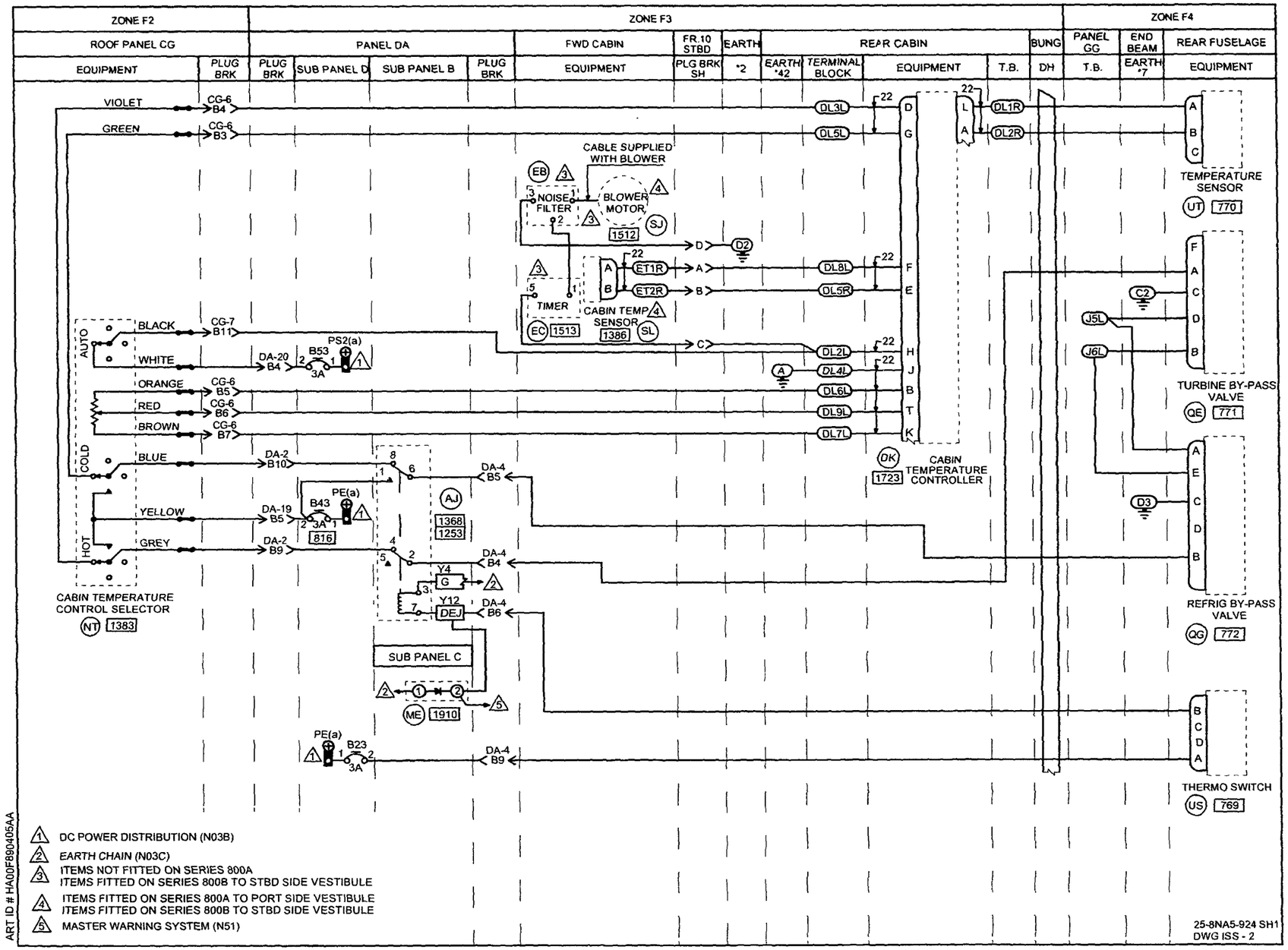
ZONE F2
ZONE F3
ZONE F4
ROOF PANEL CG
PANEL DA
FWD CABIN
FR.10 STBD
EARTH
REAR CABIN
BUNG
PANEL GG
END BEAM
REAR FUSELAGE
EQUIPMENT
PLUG BRK
PLUG BRK
SUB PANEL D
SUB PANEL B
PLUG BRK
EQUIPMENT
PLG BRK SH
*2
EARTH *42
TERMINAL BLOCK
EQUIPMENT
T.B.
DH
T.B.
EARTH *7
EQUIPMENT
VIOLET
GREEN
BLACK
WHITE
ORANGE
RED
BROWN
BLUE
YELLOW
GREY
AUTO
COLD
HOT
CABIN TEMPERATURE CONTROL SELECTOR
NT 1383
CABLE SUPPLIED WITH BLOWER
NOISE FILTER
BLOWER MOTOR
1512
TIMER
CABIN TEMP SENSOR
1386
EC 1513
SL
SJ
EB
CABIN TEMPERATURE CONTROLLER
1723
DK
TEMPERATURE SENSOR
UT 770
TURBINE BY-PASS VALVE
QE 771
REFRIG BY-PASS VALVE
QG 772
THERMO SWITCH
US 769
SUB PANEL C
ME 1910
AJ
1368
1253
816
1. DC POWER DISTRIBUTION (N03B)
2. EARTH CHAIN (N03C)
3. ITEMS NOT FITTED ON SERIES 800A
ITEMS FITTED ON SERIES 800B TO STBD SIDE VESTIBULE
4. ITEMS FITTED ON SERIES 800A TO PORT SIDE VESTIBULE
ITEMS FITTED ON SERIES 800B TO STBD SIDE VESTIBULE
5. MASTER WARNING SYSTEM (N51)
ART ID # HA00F890405AA
25-8NA5-924 SH1
DWG ISS - 2

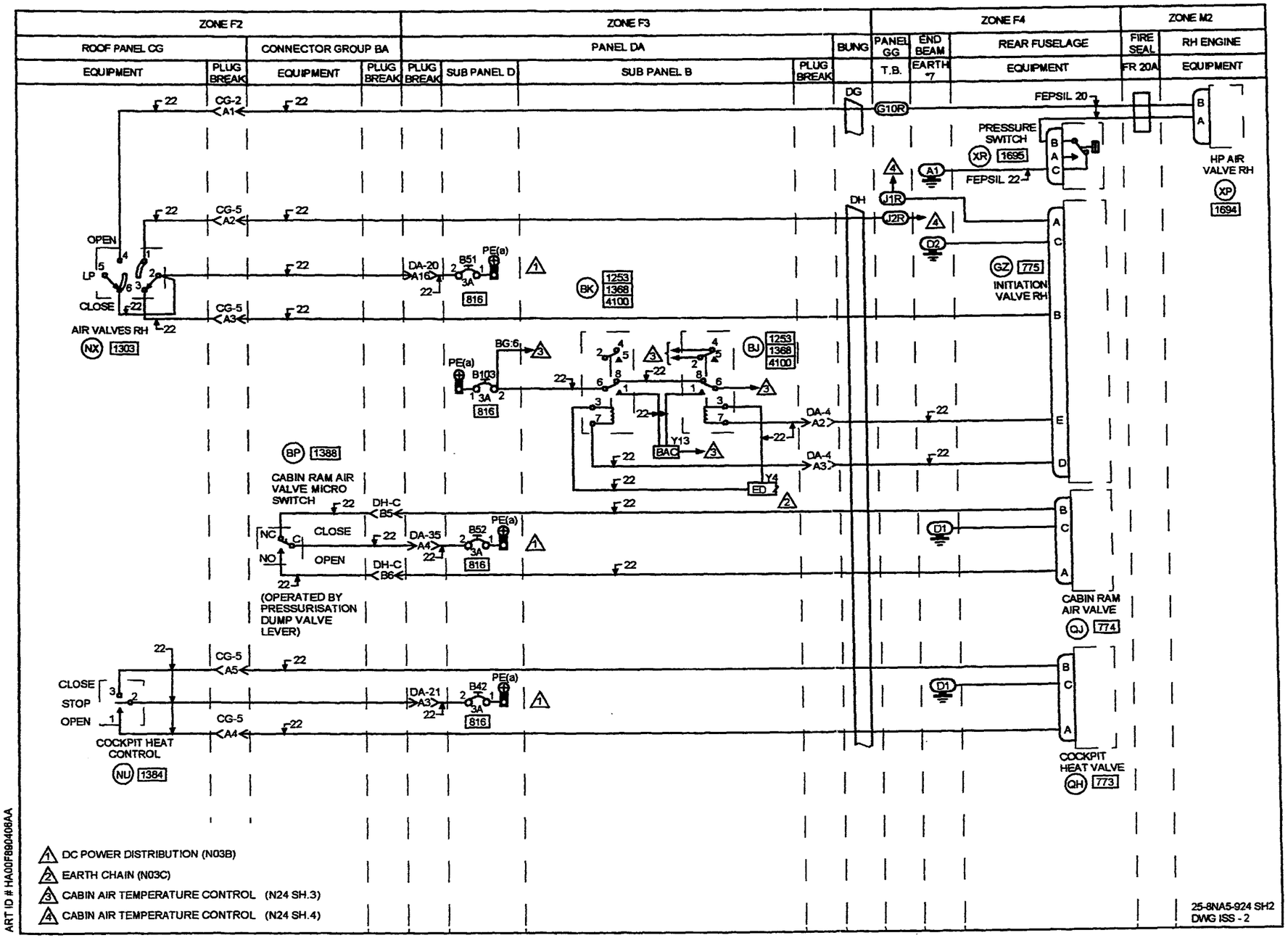
ZONE F2
ZONE F3
ZONE F4
ZONE M2
ROOF PANEL CG
CONNECTOR GROUP BA
PANEL DA
BUNG
PANEL GG
END BEAM
REAR FUSELAGE
FIRE SEAL
RH ENGINE
EQUIPMENT
PLUG BREAK
SUB PANEL D
SUB PANEL B
T.B.
EARTH *7
FR 20A
DG
G10R
FEPSIL 20
PRESSURE SWITCH
XR 1695
FEPSIL 22
HP AIR VALVE RH
XP 1694
DH
J1R
J2R
D2
GZ 775
INITIATION VALVE RH
OPEN
LP
CLOSE
AIR VALVES RH
NX 1303
CG-2 A1
CG-5 A2
CG-5 A3
DA-20 A16
B51
PE(a)
816
BK 1253 1368 4100
BG:6
B103
BJ 1253 1368 4100
DA-4 A2
DA-4 A3
Y13
BAC
Y4
ED
BP 1388
CABIN RAM AIR VALVE MICRO SWITCH
DH-C B5
DH-C B6
NC
NO
CLOSE
OPEN
DA-35 A4
B52
D1
(OPERATED BY PRESSURISATION DUMP VALVE LEVER)
CABIN RAM AIR VALVE
QJ 774
CG-5 A5
CG-5 A4
DA-21 A3
B42
COCKPIT HEAT CONTROL
NU 1384
COCKPIT HEAT VALVE
QH 773
1 DC POWER DISTRIBUTION (N03B)
2 EARTH CHAIN (N03C)
3 CABIN AIR TEMPERATURE CONTROL (N24 SH.3)
4 CABIN AIR TEMPERATURE CONTROL (N24 SH.4)
25-8NA5-924 SH2
DWG ISS - 2
ART ID # HA00F890406AA

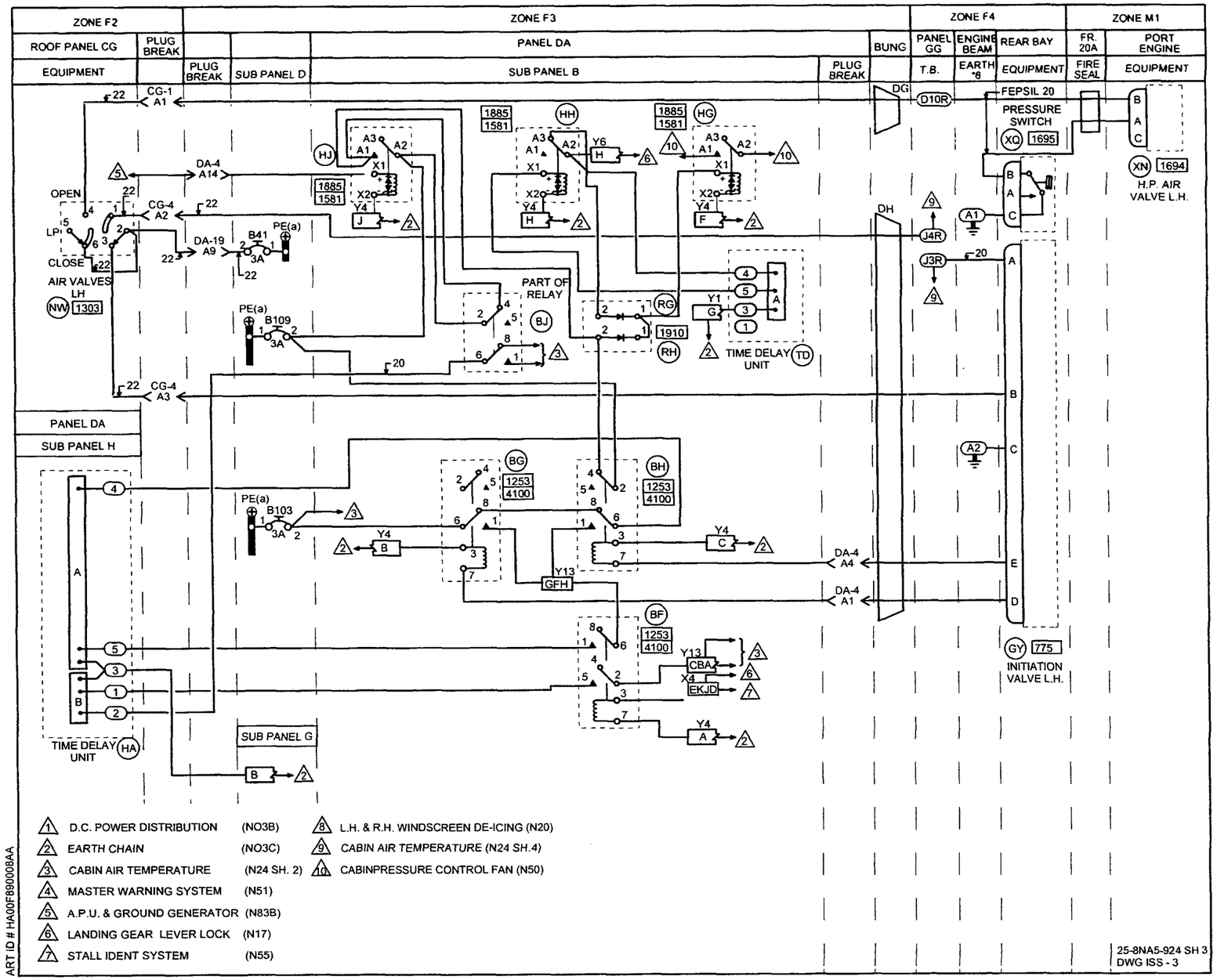
ZONE F2
ZONE F3
ZONE F4
ZONE M1
ROOF PANEL CG
PLUG BREAK
PANEL DA
BUNG
PANEL GG
ENGINE BEAM
REAR BAY
FR. 20A
PORT ENGINE
EQUIPMENT
PLUG BREAK
SUB PANEL D
SUB PANEL B
PLUG BREAK
T.B.
EARTH *6
EQUIPMENT
FIRE SEAL
EQUIPMENT
FEPSIL 20
PRESSURE SWITCH
XQ 1695
XN 1694
H.P. AIR VALVE L.H.
OPEN
LP
CLOSE
AIR VALVES LH
NW 1303
PART OF RELAY
TIME DELAY UNIT
PANEL DA
SUB PANEL H
TIME DELAY UNIT
SUB PANEL G
INITIATION VALVE L.H.
GY 775
1 D.C. POWER DISTRIBUTION (NO3B)
2 EARTH CHAIN (NO3C)
3 CABIN AIR TEMPERATURE (N24 SH. 2)
4 MASTER WARNING SYSTEM (N51)
5 A.P.U. & GROUND GENERATOR (N83B)
6 LANDING GEAR LEVER LOCK (N17)
7 STALL IDENT SYSTEM (N55)
8 L.H. & R.H. WINDSCREEN DE-ICING (N20)
9 CABIN AIR TEMPERATURE (N24 SH.4)
10 CABINPRESSURE CONTROL FAN (N50)
ART ID # HA00F890008AA
25-8NA5-924 SH 3
DWG ISS - 3

IDENT	PART NUMBER	1234567 NOMENCLATURE	EFFECT FROM TO	UNITS PER ASSY
		CABIN AIR TEMPERATURE CONTROL	100101	
	25-8NA5-924	WIRING DIAGRAM- (MOD 253200H)		RF
AJ-DAB	HDS8SF3J03	.RELAY- (VK1793) (USED WITH SOCKET: RSE120074 (V58982))		1
BF-DAB	HDS8SF3J03	.RELAY- (VK1793) (USED WITH SOCKET: RSE120074 (V58982))		1
BG-DAB	HDS8SF3J03	.RELAY- (VK1793) (USED WITH SOCKET: RSE120074 (V58982))		1
BH-DAB	HDS8SF3J03	.RELAY- (VK1793) (USED WITH SOCKET: RSE120074 (V58982))		1
BJ-DAB	HDS8SF3J03	.RELAY- (VK1793) (USED WITH SOCKET: RSE120074 (V58982))		1
BK-DAB	HDS8SF3J03	.RELAY- (VK1793) (USED WITH SOCKET: RSE120074 (V58982))		1
BP-BA	BZ2RQ1T04	.SWITCH- (V91929) (OPT (VK6595))		1
B103-DAD	483TCG11J25-3A	.CIRCUIT BREAKER-3AMP (VU0091)		1
B109-DAD	483TCG11J25-3A	.CIRCUIT BREAKER-3AMP (VU0091)		1
B23-DAD	483TCG11J25-3A	.CIRCUIT BREAKER-3AMP (VU0091)		1
B41-DAD	483TCG11J25-3A	.CIRCUIT BREAKER-3AMP (VU0091)		1
B42-DAD	483TCG11J25-3A	.CIRCUIT BREAKER-3AMP (VU0091)		1
B43-DAD	483TCG11J25-3A	.CIRCUIT BREAKER-3AMP (VU0091)		1
		MISSING ITEM NO. NOT APPLICABLE		

– ITEM NOT ILLUSTRATED

IDENT	PART NUMBER	1234567 NOMENCLATURE	EFFECT FROM TO	UNITS PER ASSY
B51-DAD	483TCG11J25-3A	.CIRCUIT BREAKER-3AMP (VU0091)		1
B52-DAD	483TCG11J25-3A	.CIRCUIT BREAKER-3AMP (VU0091)		1
B53-DAD	483TCG11J25-3A	.CIRCUIT BREAKER-3AMP (VU0091)		1
CG1-P	MTC100YH2-009	.SHELL-PLUG (VK1010) (USED WITH WAFERS: TYPE A, MTC100KT2-1101 TYPE B, MTC100KT2-1102)		1
CG1-R	MTC100YH2-010	.SHELL-RECEPTACLE (VK1010) (USED WITH WAFERS: TYPE A, MTC100KT2-1103 TYPE B, MTC100KT2-1104)		1
CG2-P	MTC100YH2-009	.SHELL-PLUG (VK1010) (USED WITH WAFERS: TYPE A, MTC100KT2-1101 TYPE B, MTC100KT2-1102)		1
CG2-R	MTC100YH2-010	.SHELL-RECEPTACLE (VK1010) (USED WITH WAFERS: TYPE A, MTC100KT2-1103 TYPE B, MTC100KT2-1104)		1
CG4-P	MTC100YH1-003	.SHELL-PLUG (VK1010) (USED WITH WAFERS: TYPE A, MTC100KT1-1101 TYPE B, MTC100KT1-1102)		1
CG4-R	MTC100YH1-004	.SHELL-RECEPTACLE (VK1010) (USED WITH WAFERS: TYPE A, MTC100KT1-1103 TYPE B, MTC100KT1-1104)		1
CG5-P	MTC100YH1-003	.SHELL-PLUG (VK1010) (USED WITH WAFERS: TYPE A, MTC100KT1-1101 TYPE B, MTC100KT1-1102)		1
CG5-R	MTC100YH1-004	.SHELL-RECEPTACLE (VK1010) (USED WITH WAFERS: TYPE A, MTC100KT1-1103 TYPE B, MTC100KT1-1104		1
		MISSING ITEM NO. NOT APPLICABLE		

– ITEM NOT ILLUSTRATED

IDENT	PART NUMBER	1234567 NOMENCLATURE	EFFECT FROM TO	UNITS PER ASSY
CG6-P	MTC100YH2-009	.SHELL-PLUG (VK1010) (USED WITH WAFERS: TYPE A, MTC100KT2-1101 TYPE B, MTC100KT2-1102)		1
CG6-R	MTC100YH2-010	.SHELL-RECEPTACLE (VK1010) (USED WITH WAFERS: TYPE A, MTC100KT2-1103 TYPE B, MTC100KT2-1104)		1
CG7-P	MTC100YH2-009	.SHELL-PLUG (VK1010) (USED WITH WAFERS: TYPE A, MTC100KT2-1101 TYPE B, MTC100KT2-1102)		1
CG7-R	MTC100YH2-010	.SHELL-RECEPTACLE (VK1010) (USED WITH WAFERS: TYPE A, MTC100KT2-1103 TYPE B, MTC100KT2-1104)		1
D-GG	HWBUN1146D10B	.TERMINAL BLOCK- (VK0574)		1
DA19-P	MTC100YH2-009	.SHELL-PLUG (VK1010) (USED WITH WAFERS: TYPE A, MTC100KT2-1101 TYPE B, MTC100KT2-1102)		1
DA19-R	MTC100YH2-010	.SHELL-RECEPTACLE (VK1010) (USED WITH WAFERS: TYPE A, MTC100KT2-1103 TYPE B, MTC100KT2-1104)		1
DA2-P	MTC100YH1-003	.SHELL-PLUG (VK1010) (USED WITH WAFERS: TYPE A, MTC100KT1-1101 TYPE B, MTC100KT1-1102)		1
DA2-R	MTC100YH1-004	.SHELL-RECEPTACLE (VK1010) (USED WITH WAFERS: TYPE A, MTC100KT1-1103 TYPE B, MTC100KT1-1104		1
DA20-P	MTC100YH2-009	.SHELL-PLUG (VK1010) (USED WITH WAFERS: TYPE A, MTC100KT2-1101 TYPE B, MTC100KT2-1102)		1
		MISSING ITEM NO. NOT APPLICABLE		

– ITEM NOT ILLUSTRATED

IDENT	PART NUMBER	1234567 NOMENCLATURE	EFFECT FROM TO	UNITS PER ASSY
DA20-R	MTC100YH2-010	.SHELL-RECEPTACLE (VK1010) (USED WITH WAFERS: TYPE A, MTC100KT2-1103 TYPE B, MTC100KT2-1104)		1
DA21-P	MTC100YH2-009	.SHELL-PLUG (VK1010) (USED WITH WAFERS: TYPE A, MTC100KT2-1101 TYPE B, MTC100KT2-1102)		1
DA21-R	MTC100YH2-010	.SHELL-RECEPTACLE (VK1010) (USED WITH WAFERS: TYPE A, MTC100KT2-1103 TYPE B, MTC100KT2-1104)		1
DA35-P	MTC100YH2-009	.SHELL-PLUG (VK1010) (USED WITH WAFERS: TYPE A, MTC100KT2-1101 TYPE B, MTC100KT2-1102)		1
DA35-R	MTC100YH2-010	.SHELL-RECEPTACLE (VK1010) (USED WITH WAFERS: TYPE A, MTC100KT2-1103 TYPE B, MTC100KT2-1104)		1
DA4-P	MTC100YH2-009	.SHELL-PLUG (VK1010) (USED WITH WAFERS: TYPE A, MTC100KT2-1101 TYPE B, MTC100KT2-1102)		1
DA4-R	MTC100YH2-010	.SHELL-RECEPTACLE (VK1010) (USED WITH WAFERS: TYPE A, MTC100KT2-1103 TYPE B, MTC100KT2-1104)		1
DG	422255-8	.BUNG- (VK1793)		1
DH	422254-9	.BUNG- (VK1793)		1
DH-C-P	MTC100YH1-003	.SHELL-PLUG (VK1010) (USED WITH WAFERS: TYPE A, MTC100KT1-1103 TYPE B, MTC100KT1-1104)		1
DH-C-R	MTC100YH1-004	.SHELL-RECEPTACLE (VK1010) (USED WITH WAFERS: TYPE A, MTC100KT1-1101 TYPE B, MTC100KT1-1102)		1
		MISSING ITEM NO. NOT APPLICABLE		

– ITEM NOT ILLUSTRATED

IDENT	PART NUMBER	1234567 NOMENCLATURE	EFFECT FROM TO	UNITS PER ASSY
DK	617452-3	.TEMPERATURE CONTROLLER- (UNIT EXCHANGE ITEM) (V70210) (USED WITH CONNECTOR: CPT06E14-18S (VK0690))		1
DL	HWBUN1146D10B	.TERMINAL BLOCK- (VK0574)		1
EB	UNASSIGNED	.UNASSIGNED-NOISE FILTER (SUPPLIED WITH BLOWER, SJ) (V+1251)		1
EC	25-6NF1453-17	.TIMER		1
ET	HWBUN1146D3B	.TERMINAL BLOCK- (VK0574)		1
G-GG	HWBUN1146D10B	.TERMINAL BLOCK- (VK0574)		1
GY	321292-1	.VALVE- (UNIT EXCHANGE ITEM) (V7X000) (USED WITH CONNECTOR: MS3108R14-5S (V71468) (OPT (VK0316)))		1
GZ	321292-1	.VALVE- (UNIT EXCHANGE ITEM) (V7X000) (USED WITH CONNECTOR: MS3108R14-5S (V71468) (OPT (VK0316)))		1
HA-DAH	25-7NF885A	.TIME DELAY UNIT ASSY- (COMPRISING OF: TERMINAL BLOCK WBUN1193SS5B (VK0574))		1
HG-DAB	M300-1264	.RELAY- (VK6265) (USED WITH SOCKET: M12883-41-16 (V81349))		1
HH-DAB	M300-1264	.RELAY- (VK6265) (USED WITH SOCKET: M12883-41-16 (V81349))		1
		MISSING ITEM NO. NOT APPLICABLE		

— ITEM NOT ILLUSTRATED

IDENT	PART NUMBER	1234567 NOMENCLATURE	EFFECT FROM TO	UNITS PER ASSY
HJ-DAB	M300-1264	.RELAY- (VK6265) (USED WITH SOCKET: M12883-41-16 (V81349))		1
J-GG	HWBUN1146D10B	.TERMINAL BLOCK- (VK0574)		1
ME-DAC	BYW54	.DIODE- (VK0004)		1
M2-DAG	MRTB20E04-111	.TERMINAL JUNCTION MODULE- IDENTITY NOT SHOWN ON DRAWING (V14283)		1
NT-CG	25-6MC415	.SELECTOR ASSY-TEMPERATURE (COMPRISING OF: SELECTOR 627578-1 (V70210))		1
NU-CG	1TP1-5	.SWITCH- (V91929) (OPT (VK6596)) (PRE MOD 253210A)		1
NU-CG	1TP1-5M	.SWITCH- (V91929) (OPT (VK6596)) (MOD 253210A)		1
NW-CG	2TP1-10	.SWITCH- (V91929) (OPT (VK6596)) (PRE MOD 253210A)		1
NW-CG	2TP1-10M	.SWITCH- (V91929) (OPT (VK6596)) (MOD 253210A)		1
NX-CG	2TP1-10	.SWITCH- (V91929) (OPT (VK6596)) (PRE MOD 253210A)		1
NX-CG	2TP1-10M	.SWITCH- (V91929) (OPT (VK6596)) (MOD 253210A)		1
QE	321776-1-1	.VALVE- (UNIT EXCHANGE ITEM) (V7X000) (USED WITH CONNECTOR: MS3106R14S5S (V71468) (OPT (VK0316)))		1
		MISSING ITEM NO. NOT APPLICABLE		

– ITEM NOT ILLUSTRATED

IDENT	PART NUMBER	1234567 NOMENCLATURE	EFFECT FROM TO	UNITS PER ASSY
QG	104968	.VALVE- (UNIT EXCHANGE ITEM) (V7X000) (USED WITH CONNECTOR: MS3106R14S5S (V71468) (OPT (VK0316)))		1
QH	104568-3	.VALVE- (V7X000) (USED WITH CONNECTOR: MS3108R10SL3S (V71468) (OPT (VK0316)))		1
QJ	321262-1	.VALVE- (UNIT EXCHANGE ITEM) (V7X000) (USED WITH CONNECTOR: MS3108R14-5S (V71468) (OPT (VK0316)))		1
RG-DAB	BYW54	.DIODE- (VK0004)		1
RH-DAB	BYW54	.DIODE- (VK0004)		1
SH-P	BAEREF000004029	.CONNECTOR-PIN (6026-10-6PNCONDD (VK1793))		1
SH-R	BAEREF000004180	.CONNECTOR-SOCKET (6027-10-6SNCONDD (VK1793))		1
SJ	25-7FC379-97A	.BLOWER UNIT		1
SL	607148-1	.TEMPERATURE SENSOR- (V70210) (USED WITH CONNECTOR: MS3126E10-6S (V71468) (OPT (VK0316)))		1
TD-DAB	25-8NF4459-27A	.TIME DELAY UNIT		1
US	21346-5	.SWITCH- (V7X000) (USED WITH CONNECTOR: MS3108R10SL4S (V71468) (OPT (VK0316))) (PRE MOD 253293A) (FOR SPARES PROCURE 21346-6)		1
		MISSING ITEM NO. NOT APPLICABLE		

– ITEM NOT ILLUSTRATED

IDENT	PART NUMBER	1234567 NOMENCLATURE	EFFECT FROM TO	UNITS PER ASSY
US	21346-6	.SWITCH- (V7X000) (USED WITH CONNECTOR: MS3108R10SL4S (V71468) (OPT (VK0316))) (MOD 253293A) (FOR SPARES PROCURE IN LIEU OF 21346-5)		1
UT	548408-1	.TEMPERATURE SENSOR- (V7X000) (USED WITH CONNECTOR: MS3108R10SL3S (V71468) (OPT (VK0316)))		1
XN	B01A2-14128A	.VALVE- (VU1585) (USED WITH CONNECTOR: MS3126F8-3S (V71468) (OPT (VK0316))) (PRE MOD 253532A)		1
XN	MAP900-001	.VALVE- (VU1585) (USED WITH CONNECTOR: MS3126F8-3S (V71468) (OPT (VK0316))) (MOD 253532A)		1
XP	B01A2-14128A	.VALVE- (VU1585) (USED WITH CONNECTOR: MS3126F8-3S (V71468) (OPT (VK0316))) (PRE MOD 253532A)		1
XP	MAP900-001	.VALVE- (VU1585) (USED WITH CONNECTOR: MS3126F8-3S (V71468) (OPT (VK0316))) (MOD 253532A)		1
XQ	HE690011	.SWITCH- (VK2617) (USED WITH CONNECTOR: M83723-13R08-33N (VK1793))		1
		MISSING ITEM NO. NOT APPLICABLE		

– ITEM NOT ILLUSTRATED

IDENT	PART NUMBER	1234567 NOMENCLATURE	EFFECT FROM TO	UNITS PER ASSY
XR	HE690011	.SWITCH- (VK2617) (USED WITH CONNECTOR: M83723-13R08-33N (VK1793))		1
X4-DAB	MRTB20E57-111	.TERMINAL JUNCTION MODULE- (V14283)		1
Y1-DAB	MRTB20E04-111	.TERMINAL JUNCTION MODULE- (V14283)		1
Y12-DAB	MRTB20E57-111	.TERMINAL JUNCTION MODULE- (V14283)		1
Y13-DAB	MRTB20E57-111	.TERMINAL JUNCTION MODULE- (V14283)		1
Y4-DAB	MRTB20E04-111	.TERMINAL JUNCTION MODULE- (V14283)		1
Y6-DAB	MRTB20E04-111	.TERMINAL JUNCTION MODULE- (V14283)		1
		MISSING ITEM NO. NOT APPLICABLE		

– ITEM NOT ILLUSTRATED

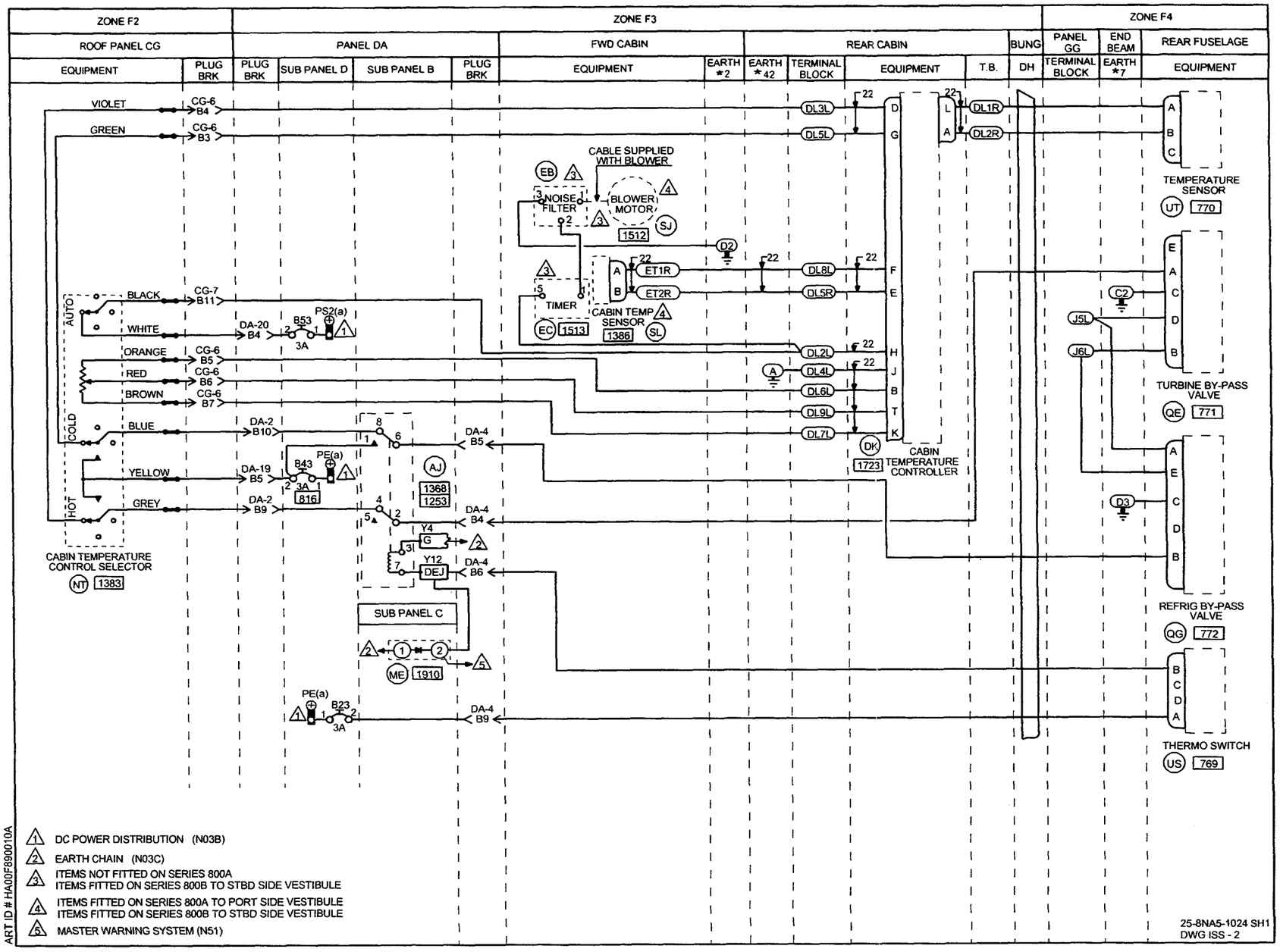
ZONE F2
ZONE F3
ZONE F4
ROOF PANEL CG
PANEL DA
FWD CABIN
REAR CABIN
BUNG
PANEL GG
END BEAM
REAR FUSELAGE
EQUIPMENT
PLUG BRK
SUB PANEL D
SUB PANEL B
EARTH *2
EARTH *42
TERMINAL BLOCK
T.B.
DH
EARTH *7
VIOLET
GREEN
BLACK
WHITE
ORANGE
RED
BROWN
BLUE
YELLOW
GREY
AUTO
COLD
HOT
CABIN TEMPERATURE CONTROL SELECTOR
CABLE SUPPLIED WITH BLOWER
NOISE FILTER
BLOWER MOTOR
TIMER
CABIN TEMP SENSOR
CABIN TEMPERATURE CONTROLLER
SUB PANEL C
TEMPERATURE SENSOR
TURBINE BY-PASS VALVE
REFRIG BY-PASS VALVE
THERMO SWITCH
1 DC POWER DISTRIBUTION (N03B)
2 EARTH CHAIN (N03C)
3 ITEMS NOT FITTED ON SERIES 800A
ITEMS FITTED ON SERIES 800B TO STBD SIDE VESTIBULE
4 ITEMS FITTED ON SERIES 800A TO PORT SIDE VESTIBULE
ITEMS FITTED ON SERIES 800B TO STBD SIDE VESTIBULE
5 MASTER WARNING SYSTEM (N51)
ART ID # HA00F890010A
25-8NA5-1024 SH1
DWG ISS - 2

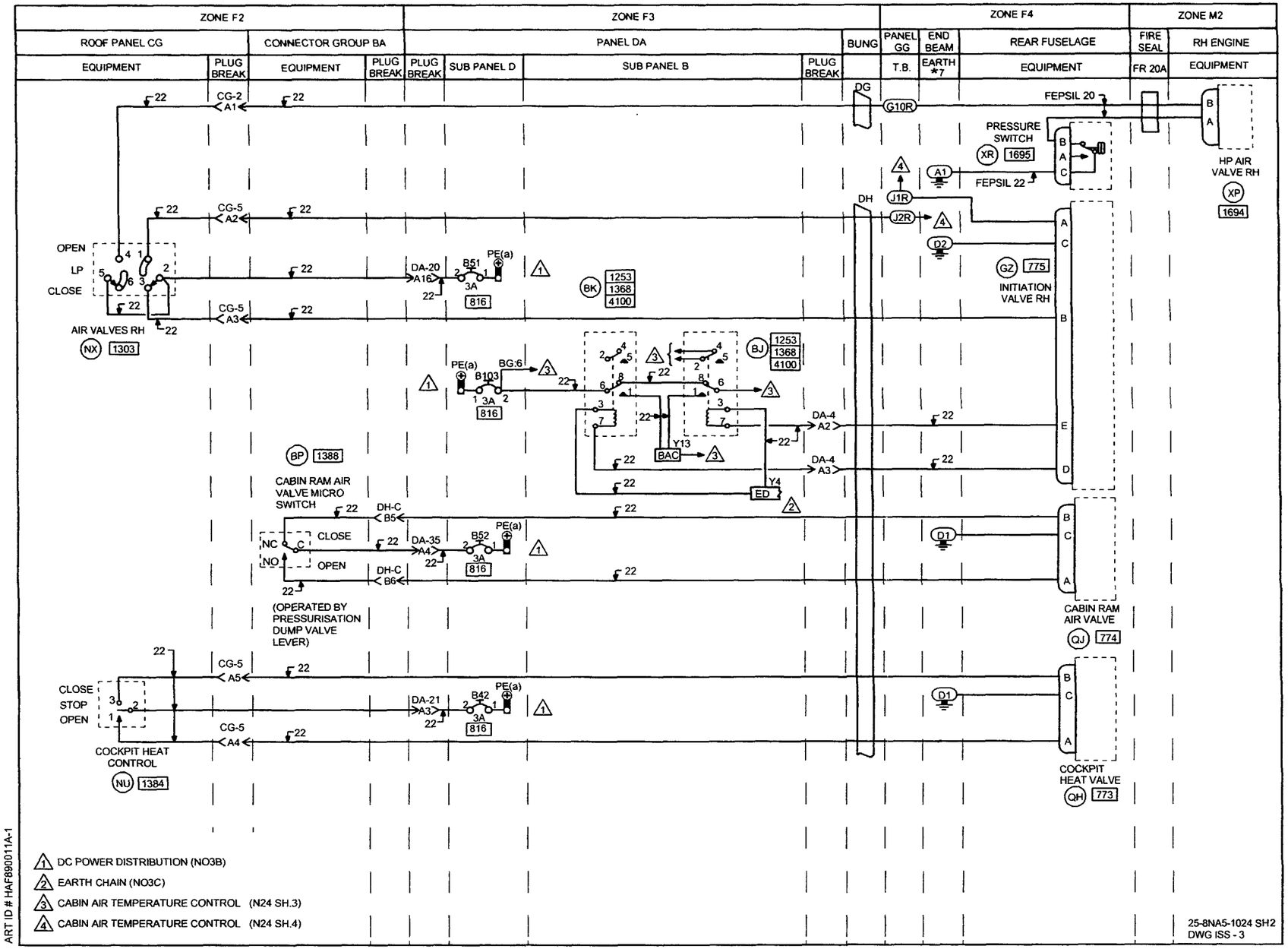
ZONE F2
ZONE F3
ZONE F4
ZONE M2
ROOF PANEL CG
CONNECTOR GROUP BA
PANEL DA
BUNG
PANEL GG
END BEAM
REAR FUSELAGE
FIRE SEAL
RH ENGINE
EQUIPMENT
PLUG BREAK
SUB PANEL D
SUB PANEL B
T.B.
EARTH *7
FR 20A
DG
G10R
FEPSIL 20
PRESSURE SWITCH
XR 1695
FEPSIL 22
HP AIR VALVE RH
XP 1694
DH
J1R
J2R
D2
GZ 775
INITIATION VALVE RH
OPEN
LP
CLOSE
AIR VALVES RH
NX 1303
CG-2 A1
CG-5 A2
CG-5 A3
DA-20 A16
B51
PE(a)
3A
816
BK 1253 1368 4100
BJ 1253 1368 4100
BG:6
B103
Y13
BAC
Y4
ED
DA-4 A2
DA-4 A3
BP 1388
CABIN RAM AIR VALVE MICRO SWITCH
NC
NO
C
CLOSE
OPEN
DH-C B5
DH-C B6
DA-35 A4
B52
(OPERATED BY PRESSURISATION DUMP VALVE LEVER)
D1
CABIN RAM AIR VALVE
QJ 774
CG-5 A5
CG-5 A4
DA-21 A3
B42
STOP
COCKPIT HEAT CONTROL
NU 1384
COCKPIT HEAT VALVE
QH 773
1 DC POWER DISTRIBUTION (NO3B)
2 EARTH CHAIN (NO3C)
3 CABIN AIR TEMPERATURE CONTROL (N24 SH.3)
4 CABIN AIR TEMPERATURE CONTROL (N24 SH.4)
25-8NA5-1024 SH2
DWG ISS - 3
ART ID # HAF890011A-1

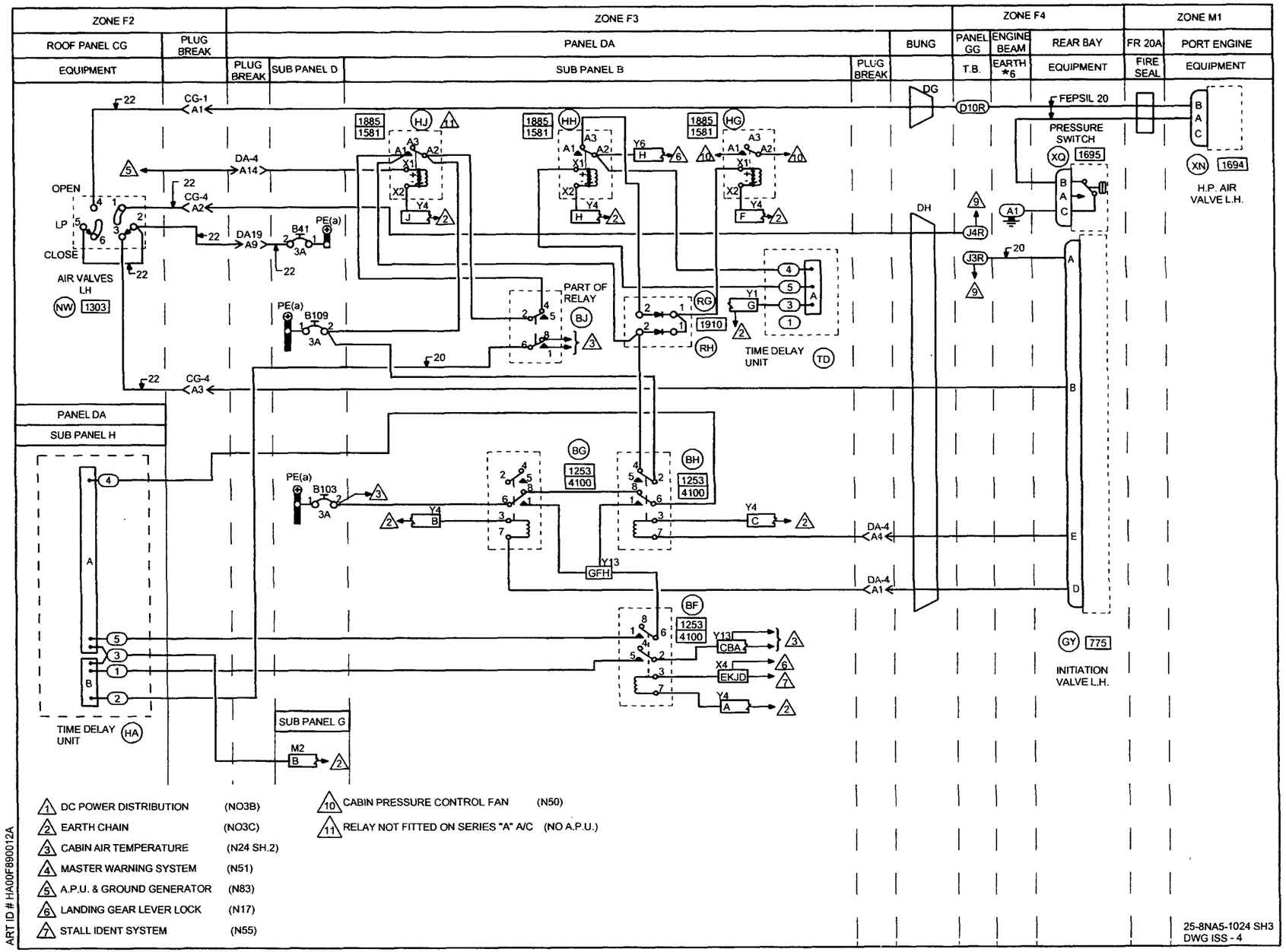
ZONE F2
ZONE F3
ZONE F4
ZONE M1
ROOF PANEL CG
PLUG BREAK
PANEL DA
BUNG
PANEL GG
ENGINE BEAM
REAR BAY
FR 20A
PORT ENGINE
EQUIPMENT
PLUG BREAK
SUB PANEL D
SUB PANEL B
PLUG BREAK
T.B.
EARTH *6
EQUIPMENT
FIRE SEAL
EQUIPMENT
CG-1 A1
DA-4 A14
CG-4 A2
DA19 A9
CG-4 A3
OPEN
LP
CLOSE
AIR VALVES LH
NW 1303
PE(a)
B41
3A
B109
B103
PART OF RELAY
BJ
RG
RH
1910
TIME DELAY UNIT
TD
DG
D10R
FEPSIL 20
PRESSURE SWITCH
XQ 1695
XN 1694
H.P. AIR VALVE L.H.
DH
J4R
J3R
A1
PANEL DA
SUB PANEL H
TIME DELAY UNIT
HA
BG
BH
BF
1253
4100
GFH
CBA
EKJD
DA-4 A4
DA-4 A1
GY 775
INITIATION VALVE L.H.
SUB PANEL G
M2
B
1 DC POWER DISTRIBUTION (NO3B)
2 EARTH CHAIN (NO3C)
3 CABIN AIR TEMPERATURE (N24 SH.2)
4 MASTER WARNING SYSTEM (N51)
5 A.P.U. & GROUND GENERATOR (N83)
6 LANDING GEAR LEVER LOCK (N17)
7 STALL IDENT SYSTEM (N55)
10 CABIN PRESSURE CONTROL FAN (N50)
11 RELAY NOT FITTED ON SERIES "A" A/C (NO A.P.U.)
ART ID # HA00F890012A
25-8NA5-1024 SH3
DWG ISS - 4

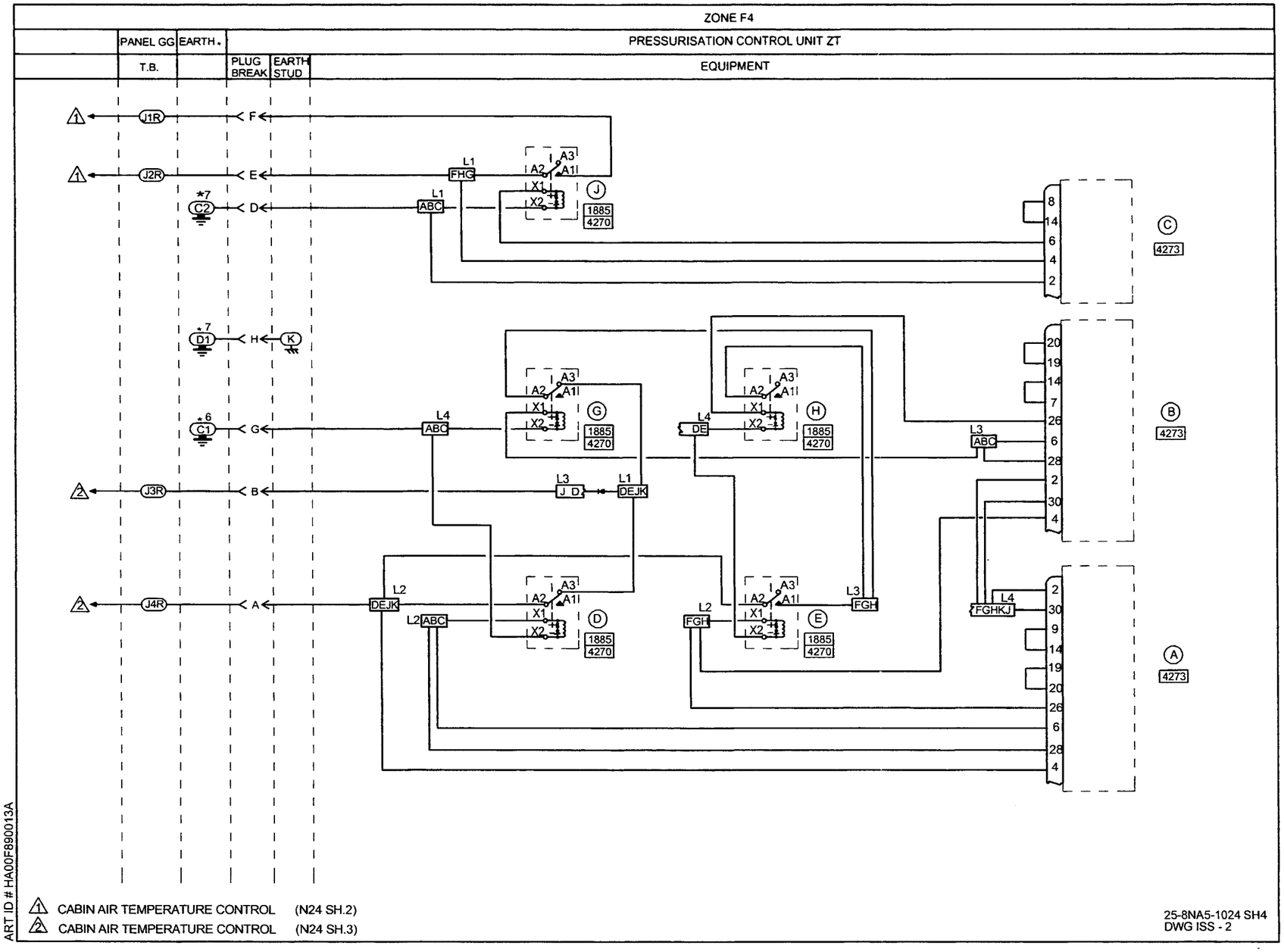
ZONE F4
PANEL GG
EARTH
PRESSURISATION CONTROL UNIT ZT
T.B.
PLUG BREAK
EARTH STUD
EQUIPMENT
J1R
J2R
J3R
J4R
F
E
D
H
G
B
A
C2
D1
C1
K
L1
FHC
ABC
L4
DE
L3
J D
DEJK
L2
FGH
FGHKJ
A3
A1
A2
X1
X2
J
G
H
D
E
1885
4270
C
4273
B
4273
A
4273
CABIN AIR TEMPERATURE CONTROL (N24 SH.2)
CABIN AIR TEMPERATURE CONTROL (N24 SH.3)
25-8NA5-1024 SH4
DWG ISS - 2
ART ID # HA00F890013A

IDENT	PART NUMBER	1234567 NOMENCLATURE	EFFECT FROM TO	UNITS PER ASSY
		CABIN AIR TEMPERATURE CONTROL	094094 097097 102108 110115 117119 121164 166166 168179 181185 187189 191193 195207 209209 212218 220221 223223 225225 229232 234234 236236 238257 259276	
	25-8NA5-1024	WIRING DIAGRAM- (MOD 253201B)		RF
A-ZT	ERS015DJ000	.CONNECTOR-PRINTED CIRCUIT BOARD (VK5533)		1
AJ-DAB	HDS8SF3J03	.RELAY- (VK1793) (USED WITH SOCKET: RSE120074 (V58982))		1
B-ZT	ERS015DJ000	.CONNECTOR-PRINTED CIRCUIT BOARD (VK5533)		1
BF-DAB	HDS8SF3J03	.RELAY- (VK1793) (USED WITH SOCKET: RSE120074 (V58982))		1
BG-DAB	HDS8SF3J03	.RELAY- (VK1793) (USED WITH SOCKET: RSE120074 (V58982))		1
BH-DAB	HDS8SF3J03	.RELAY- (VK1793) (USED WITH SOCKET: RSE120074 (V58982))		1
		MISSING ITEM NO. NOT APPLICABLE		

– ITEM NOT ILLUSTRATED

IDENT	PART NUMBER	1234567 NOMENCLATURE	EFFECT FROM TO	UNITS PER ASSY
BJ-DAB	HDS8SF3J03	.RELAY- (VK1793) (USED WITH SOCKET: RSE120074 (V58982))		1
BK-DAB	HDS8SF3J03	.RELAY- (VK1793) (USED WITH SOCKET: RSE120074 (V58982))		1
BP-BA	BZ2RQ1T04	.SWITCH- (V91929) (OPT (VK6595))		1
B103-DAD	483TCG11J25-3A	.CIRCUIT BREAKER-3AMP (VU0091)		1
B109-DAD	483TCG11J25-3A	.CIRCUIT BREAKER-3AMP (VU0091)		1
B23-DAD	483TCG11J25-3A	.CIRCUIT BREAKER-3AMP (VU0091)		1
B41-DAD	483TCG11J25-3A	.CIRCUIT BREAKER-3AMP (VU0091)		1
B42-DAD	483TCG11J25-3A	.CIRCUIT BREAKER-3AMP (VU0091)		1
B43-DAD	483TCG11J25-3A	.CIRCUIT BREAKER-3AMP (VU0091)		1
B51-DAD	483TCG11J25-3A	.CIRCUIT BREAKER-3AMP (VU0091)		1
B52-DAD	483TCG11J25-3A	.CIRCUIT BREAKER-3AMP (VU0091)		1
B53-DAD	483TCG11J25-3A	.CIRCUIT BREAKER-3AMP (VU0091)		1
C-ZT	ERS015DJ000	.CONNECTOR-PRINTED CIRCUIT BOARD (VK5533)		1
		MISSING ITEM NO. NOT APPLICABLE		

– ITEM NOT ILLUSTRATED

IDENT	PART NUMBER	1234567 NOMENCLATURE	EFFECT FROM TO	UNITS PER ASSY
CG1-P	MTC100YH2-009	.SHELL-PLUG (VK1010) (USED WITH WAFERS: TYPE A, MTC100KT2-1101 TYPE B, MTC100KT2-1102)	094094 097097 102108 110115 117119 121164 166166 168179 181185 187189 191193 195207 209209 212218 220221 223223 225225 229232 234234 236236 238254	1
CG1-P	MTC100YH2-009	.SHELL-PLUG (VK1010) (USED WITH INSERTS: PRIMARY MTC100YC1-001 SECONDARY MTC100YC1-002) (MOD 253252A)	255257 259276	1
CG1-R	MTC100YH2-010	.SHELL-RECEPTACLE (VK1010) (USED WITH WAFERS: TYPE A, MTC100KT2-1103 TYPE B, MTC100KT2-1104)	094094 097097 102108 110115 117119 121164 166166 168179 181185 187189 191193 195207 209209 212218 220221 223223 225225 229232 234234 236236 238254	1
		MISSING ITEM NO. NOT APPLICABLE		

– ITEM NOT ILLUSTRATED

IDENT	PART NUMBER	1234567 NOMENCLATURE	EFFECT FROM TO	UNITS PER ASSY
CG1-R	MTC100YH2-010	.SHELL-RECEPTACLE (VK1010) (USED WITH INSERTS: PRIMARY MTC100YC1-003 SECONDARY MTC100YC1-004) (MOD 253252A)	255257 259276	1
CG2-P	MTC100YH2-009	.SHELL-PLUG (VK1010) (USED WITH WAFERS: TYPE A, MTC100KT2-1101 TYPE B, MTC100KT2-1102)	094094 097097 102108 110115 117119 121164 166166 168179 181185 187189 191193 195207 209209 212218 220221 223223 225225 229232 234234 236236 238254	1
CG2-P	MTC100YH2-009	.SHELL-PLUG (VK1010) (USED WITH INSERTS: PRIMARY MTC100YC1-001 SECONDARY MTC100YC1-002) (MOD 253252A)	255257 259276	1
		MISSING ITEM NO. NOT APPLICABLE		

– ITEM NOT ILLUSTRATED

IDENT	PART NUMBER	1234567 NOMENCLATURE	EFFECT FROM TO	UNITS PER ASSY
CG2-R	MTC100YH2-010	.SHELL-RECEPTACLE (VK1010) (USED WITH WAFERS: TYPE A, MTC100KT2-1103 TYPE B, MTC100KT2-1104)	094094 097097 102108 110115 117119 121164 166166 168179 181185 187189 191193 195207 209209 212218 220221 223223 225225 229232 234234 236236 238254	1
CG2-R	MTC100YH2-010	.SHELL-RECEPTACLE (VK1010) (USED WITH INSERTS: PRIMARY MTC100YC1-003 SECONDARY MTC100YC1-004) (MOD 253252A)	255257 259276	1
CG4-P	MTC100YH1-003	.SHELL-PLUG (VK1010) (USED WITH WAFERS: TYPE A, MTC100KT1-1101 TYPE B, MTC100KT1-1102)	094094 097097 102108 110115 117119 121164 166166 168179 181185 187189 191193 195207 209209 212218 220221 223223 225225 229232 234234 236236 238254	1
		MISSING ITEM NO. NOT APPLICABLE		

– ITEM NOT ILLUSTRATED

IDENT	PART NUMBER	1234567 NOMENCLATURE	EFFECT FROM TO	UNITS PER ASSY
CG4-P	MTC100YH1-003	.SHELL-PLUG (VK1010) (USED WITH INSERT MTC100YC1-005) (MOD 253252A)	255257 259276	1
CG4-R	MTC100YH1-004	.SHELL-RECEPTACLE (VK1010) (USED WITH WAFERS: TYPE A, MTC100KT1-1103 TYPE B, MTC100KT1-1104)	094094 097097 102108 110115 117119 121164 166166 168179 181185 187189 191193 195207 209209 212218 220221 223223 225225 229232 234234 236236 238254	1
CG4-R	MTC100YH1-004	.SHELL-RECEPTACLE (VK1010) (USED WITH INSERT MTC100YC1-006) (MOD 253252A)	255257 259276	1
		MISSING ITEM NO. NOT APPLICABLE		

– ITEM NOT ILLUSTRATED

IDENT	PART NUMBER	1234567 NOMENCLATURE	EFFECT FROM TO	UNITS PER ASSY
CG5-P	MTC100YH1-003	.SHELL-PLUG (VK1010) (USED WITH WAFERS: TYPE A, MTC100KT1-1101 TYPE B, MTC100KT1-1102)	094094 097097 102108 110115 117119 121164 166166 168179 181185 187189 191193 195207 209209 212218 220221 223223 225225 229232 234234 236236 238254	1
CG5-P	MTC100YH1-003	.SHELL-PLUG (VK1010) (USED WITH INSERT MTC100YC1-005) (MOD 253252A)	255257 259276	1
CG5-R	MTC100YH1-004	.SHELL-RECEPTACLE (VK1010) (USED WITH WAFERS: TYPE A, MTC100KT1-1103 TYPE B, MTC100KT1-1104	094094 097097 102108 110115 117119 121164 166166 168179 181185 187189 191193 195207 209209 212218 220221 223223 225225 229232 234234 236236 238254	1
		MISSING ITEM NO. NOT APPLICABLE		

– ITEM NOT ILLUSTRATED

IDENT	PART NUMBER	1234567 NOMENCLATURE	EFFECT FROM TO	UNITS PER ASSY
CG5-R	MTC100YH1-004	.SHELL-RECEPTACLE (VK1010) (USED WITH INSERT: MTC100YC1-006) (MOD 253252A)	255257 259276	1
CG6-P	MTC100YH2-009	.SHELL-PLUG (VK1010) (USED WITH WAFERS: TYPE A, MTC100KT2-1101 TYPE B, MTC100KT2-1102)	094094 097097 102108 110115 117119 121164 166166 168179 181185 187189 191193 195207 209209 212218 220221 223223 225225 229232 234234 236236 238254	1
CG6-P	MTC100YH2-009	.SHELL-PLUG (VK1010) (USED WITH INSERTS: PRIMARY MTC100YC1-001 SECONDARY MTC100YC1-002) (MOD 253252A)	255257 259276	1
		MISSING ITEM NO. NOT APPLICABLE		

– ITEM NOT ILLUSTRATED

IDENT	PART NUMBER	1234567 NOMENCLATURE	EFFECT FROM TO	UNITS PER ASSY
CG6-R	MTC100YH2-010	.SHELL-RECEPTACLE (VK1010) (USED WITH WAFERS: TYPE A, MTC100KT2-1103 TYPE B, MTC100KT2-1104)	094094 097097 102108 110115 117119 121164 166166 168179 181185 187189 191193 195207 209209 212218 220221 223223 225225 229232 234234 236236 238254	1
CG6-R	MTC100YH2-010	.SHELL-RECEPTACLE (VK1010) (USED WITH INSERTS: PRIMARY MTC100YC1-003 SECONDARY MTC100YC1-004) (MOD 253252A)	255257 259276	1
CG7-P	MTC100YH2-009	.SHELL-PLUG (VK1010) (USED WITH WAFERS: TYPE A, MTC100KT2-1101 TYPE B, MTC100KT2-1102)	094094 097097 102108 110115 117119 121164 166166 168179 181185 187189 191193 195207 209209 212218 220221 223223 225225 229232 234234 236236 238254	1
		MISSING ITEM NO. NOT APPLICABLE		

– ITEM NOT ILLUSTRATED

IDENT	PART NUMBER	1 2 3 4 5 6 7 NOMENCLATURE	EFFECT FROM TO	UNITS PER ASSY
CG7-P	MTC100YH2-009	.SHELL-PLUG (VK1010) (USED WITH INSERTS: PRIMARY MTC100YC1-001 SECONDARY MTC100YC1-002) (MOD 253252A)	255257 259276	1
CG7-R	MTC100YH2-010	.SHELL-RECEPTACLE (VK1010) (USED WITH WAFERS: TYPE A, MTC100KT2-1103 TYPE B, MTC100KT2-1104)	094094 097097 102108 110115 117119 121164 166166 168179 181185 187189 191193 195207 209209 212218 220221 223223 225225 229232 234234 236236 238254	1
CG7-R	MTC100YH2-010	.SHELL-RECEPTACLE (VK1010) (USED WITH INSERTS: PRIMARY MTC100YC1-003 SECONDARY MTC100YC1-004) (MOD 253252A)	255257 259276	1
D-GG	HWBUN1146D10B	.TERMINAL BLOCK- (VK0574)		1
D-ZT	M300-1264	.RELAY- (VK6265) (USED WITH SOCKET: M12883-41-16 (V81349))		1
		MISSING ITEM NO. NOT APPLICABLE		

– ITEM NOT ILLUSTRATED

IDENT	PART NUMBER	1234567 NOMENCLATURE	EFFECT FROM TO	UNITS PER ASSY
DA19-P	MTC100YH2-009	.SHELL-PLUG (VK1010) (USED WITH WAFERS: TYPE A, MTC100KT2-1101 TYPE B, MTC100KT2-1102)	094094 097097 102108 110115 117119 121164 166166 168179 181185 187189 191193 195207 209209 212218 220221 223223 225225 229232 234234 236236 238254	1
DA19-P	MTC100YH2-009	.SHELL-PLUG (VK1010) (USED WITH INSERTS: PRIMARY MTC100YC1-001 SECONDARY MTC100YC1-002) (MOD 253252A)	255257 259276	1
DA19-R	MTC100YH2-010	.SHELL-RECEPTACLE (VK1010) (USED WITH WAFERS: TYPE A, MTC100KT2-1103 TYPE B, MTC100KT2-1104)	094094 097097 102108 110115 117119 121164 166166 168179 181185 187189 191193 195207 209209 212218 220221 223223 225225 229232 234234 236236 238254	1
		MISSING ITEM NO. NOT APPLICABLE		

– ITEM NOT ILLUSTRATED

IDENT	PART NUMBER	1234567 NOMENCLATURE	EFFECT FROM TO	UNITS PER ASSY
DA19-R	MTC100YH2-010	.SHELL-RECEPTACLE (VK1010) (USED WITH INSERTS: PRIMARY MTC100YC1-003 SECONDARY MTC100YC1-004) (MOD 253252A)	255257 259276	1
DA2-P	MTC100YH1-003	.SHELL-PLUG (VK1010) (USED WITH WAFERS: TYPE A, MTC100KT1-1101 TYPE B, MTC100KT1-1102)	094094 097097 102108 110115 117119 121164 166166 168179 181185 187189 191193 195207 209209 212218 220221 223223 225225 229232 234234 236236 238254	1
DA2-P	MTC100YH1-003	.SHELL-PLUG (VK1010) (USED WITH INSERT: MTC100YC1-005) (MOD 253252A)	255257 259276	1
		MISSING ITEM NO. NOT APPLICABLE		

– ITEM NOT ILLUSTRATED

IDENT	PART NUMBER	1234567 NOMENCLATURE	EFFECT FROM TO	UNITS PER ASSY
DA2-R	MTC100YH1-004	.SHELL-RECEPTACLE (VK1010) (USED WITH WAFERS: TYPE A, MTC100KT1-1103 TYPE B, MTC100KT1-1104)	094094 097097 102108 110115 117119 121164 166166 168179 181185 187189 191193 195207 209209 212218 220221 223223 225225 229232 234234 236236 238254	1
DA2-R	MTC100YH1-004	.SHELL-RECEPTACLE (VK1010) (USED WITH INSERT: MTC100YC1-006) (MOD 253252A)	255257 259276	1
DA20-P	MTC100YH2-009	.SHELL-PLUG (VK1010) (USED WITH WAFERS: TYPE A, MTC100KT2-1101 TYPE B, MTC100KT2-1102)	094094 097097 102108 110115 117119 121164 166166 168179 181185 187189 191193 195207 209209 212218 220221 223223 225225 229232 234234 236236 238254	1
		MISSING ITEM NO. NOT APPLICABLE		

– ITEM NOT ILLUSTRATED

IDENT	PART NUMBER	1234567 NOMENCLATURE	EFFECT FROM TO	UNITS PER ASSY
DA20-P	MTC100YH2-009	.SHELL-PLUG (VK1010) (USED WITH INSERTS: PRIMARY MTC100YC1-001 SECONDARY MTC100YC1-002) (MOD 253252A)	255257 259276	1
DA20-R	MTC100YH2-010	.SHELL-RECEPTACLE (VK1010) (USED WITH WAFERS: TYPE A, MTC100KT2-1103 TYPE B, MTC100KT2-1104)	094094 097097 102108 110115 117119 121164 166166 168179 181185 187189 191193 195207 209209 212218 220221 223223 225225 229232 234234 236236 238254	1
DA20-R	MTC100YH2-010	.SHELL-RECEPTACLE (VK1010) (USED WITH INSERTS: PRIMARY MTC100YC1-003 SECONDARY MTC100YC1-004) (MOD 253252A)	255257 259276	1
		MISSING ITEM NO. NOT APPLICABLE		

– ITEM NOT ILLUSTRATED

IDENT	PART NUMBER	1234567 NOMENCLATURE	EFFECT FROM TO	UNITS PER ASSY
DA21-P	MTC100YH2-009	.SHELL-PLUG (VK1010) (USED WITH WAFERS: TYPE A, MTC100KT2-1101 TYPE B, MTC100KT2-1102)	094094 097097 102108 110115 117119 121164 166166 168179 181185 187189 191193 195207 209209 212218 220221 223223 225225 229232 234234 236236 238254	1
DA21-P	MTC100YH2-009	.SHELL-PLUG (VK1010) (USED WITH INSERTS: PRIMARY MTC100YC1-001 SECONDARY MTC100YC1-002) (MOD 253252A)	255257 259276	1
DA21-R	MTC100YH2-010	.SHELL-RECEPTACLE (VK1010) (USED WITH WAFERS: TYPE A, MTC100KT2-1103 TYPE B, MTC100KT2-1104)	094094 097097 102108 110115 117119 121164 166166 168179 181185 187189 191193 195207 209209 212218 220221 223223 225225 229232 234234 236236 238254	1
		MISSING ITEM NO. NOT APPLICABLE		

– ITEM NOT ILLUSTRATED

IDENT	PART NUMBER	1234567 NOMENCLATURE	EFFECT FROM TO	UNITS PER ASSY
DA21-R	MTC100YH2-010	.SHELL-RECEPTACLE (VK1010) (USED WITH INSERTS: PRIMARY MTC100YC1-003 SECONDARY MTC100YC1-004) (MOD 253252A)	255257 259276	1
DA35-P	MTC100YH2-009	.SHELL-PLUG (VK1010) (USED WITH WAFERS: TYPE A, MTC100KT2-1101 TYPE B, MTC100KT2-1102)	094094 097097 102108 110115 117119 121164 166166 168179 181185 187189 191193 195207 209209 212218 220221 223223 225225 229232 234234 236236 238254	1
DA35-P	MTC100YH2-009	.SHELL-PLUG (VK1010) (USED WITH INSERTS: PRIMARY MTC100YC1-001 SECONDARY MTC100YC1-002) (MOD 253252A)	255257 259276	1
		MISSING ITEM NO. NOT APPLICABLE		

– ITEM NOT ILLUSTRATED

IDENT	PART NUMBER	1234567 NOMENCLATURE	EFFECT FROM TO	UNITS PER ASSY
DA35-R	MTC100YH2-010	.SHELL-RECEPTACLE (VK1010) (USED WITH WAFERS: TYPE A, MTC100KT2-1103 TYPE B, MTC100KT2-1104)	094094 097097 102108 110115 117119 121164 166166 168179 181185 187189 191193 195207 209209 212218 220221 223223 225225 229232 234234 236236 238254	1
DA35-R	MTC100YH2-010	.SHELL-RECEPTACLE (VK1010) (USED WITH INSERTS: PRIMARY MTC100YC1-003 SECONDARY MTC100YC1-004) (MOD 253252A)	255257 259276	1
DA4-P	MTC100YH2-009	.SHELL-PLUG (VK1010) (USED WITH WAFERS: TYPE A, MTC100KT2-1101 TYPE B, MTC100KT2-1102)	094094 097097 102108 110115 117119 121164 166166 168179 181185 187189 191193 195207 209209 212218 220221 223223 225225 229232 234234 236236 238254	1
		MISSING ITEM NO. NOT APPLICABLE		

– ITEM NOT ILLUSTRATED

IDENT	PART NUMBER	1234567 NOMENCLATURE	EFFECT FROM TO	UNITS PER ASSY
DA4-P	MTC100YH2-009	.SHELL-PLUG (VK1010) (USED WITH INSERTS: PRIMARY MTC100YC1-001 SECONDARY MTC100YC1-002) (MOD 253252A)	255257 259276	1
DA4-R	MTC100YH2-010	.SHELL-RECEPTACLE (VK1010) (USED WITH WAFERS: TYPE A, MTC100KT2-1103 TYPE B, MTC100KT2-1104)	094094 097097 102108 110115 117119 121164 166166 168179 181185 187189 191193 195207 209209 212218 220221 223223 225225 229232 234234 236236 238254	1
DA4-R	MTC100YH2-010	.SHELL-RECEPTACLE (VK1010) (USED WITH INSERTS: PRIMARY MTC100YC1-003 SECONDARY MTC100YC1-004) (MOD 253252A)	255257 259276	1
DG	422255-8	.BUNG- (VK1793)		1
DH	422254-9	.BUNG- (VK1793)		1

MISSING ITEM NO. NOT APPLICABLE

– ITEM NOT ILLUSTRATED

IDENT	PART NUMBER	1234567 NOMENCLATURE	EFFECT FROM TO	UNITS PER ASSY
DH-C-P	MTC100YH1-003	.SHELL-PLUG (VK1010) (USED WITH WAFERS: TYPE A, MTC100KT1-1103 TYPE B, MTC100KT1-1104)	094094 097097 102108 110115 117119 121164 166166 168179 181185 187189 191193 195207 209209 212218 220221 223223 225225 229232 234234 236236 238254	1
DH-C-P	MTC100YH1-003	.SHELL-PLUG (VK1010) (USED WITH INSERT: MTC100YC1-006) (MOD 253252A)	255257 259276	1
DH-C-R	MTC100YH1-004	.SHELL-RECEPTACLE (VK1010) (USED WITH WAFERS: TYPE A, MTC100KT1-1101 TYPE B, MTC100KT1-1102)	094094 097097 102108 110115 117119 121164 166166 168179 181185 187189 191193 195207 209209 212218 220221 223223 225225 229232 234234 236236 238254	1
		MISSING ITEM NO. NOT APPLICABLE		

– ITEM NOT ILLUSTRATED

IDENT	PART NUMBER	1234567 NOMENCLATURE	EFFECT FROM TO	UNITS PER ASSY
DH-C-R	MTC100YH1-004	.SHELL-RECEPTACLE (VK1010) (USED WITH INSERT: MTC100YC1-005) (MOD 253252A)	255257 259276	1
DK	617452-3	.TEMPERATURE CONTROLLER- (UNIT EXCHANGE ITEM) (V70210) (USED WITH CONNECTOR: CPT06E14-18S (VK0690))		1
DL	HWBUN1146D10B	.TERMINAL BLOCK- (VK0574)		1
E-ZT	M300-1264	.RELAY- (VK6265) (USED WITH SOCKET: M12883-41-16 (V81349))		1
EB	UNASSIGNED	.UNASSIGNED-NOISE FILTER (SUPPLIED WITH BLOWER, SJ) (V+1251)		1
EC	25-6NF1453-17	.TIMER		1
ET	HWBUN1146D3B	.TERMINAL BLOCK- (VK0574)		1
G-GG	HWBUN1146D10B	.TERMINAL BLOCK- (VK0574)		1
G-ZT	M300-1264	.RELAY- (VK6265) (USED WITH SOCKET: M12883-41-16 (V81349))		1
GY	321292-1	.VALVE- (UNIT EXCHANGE ITEM) (V7X000) (USED WITH CONNECTOR: MS3108R14-5S (V71468) (OPT (VK0316)))		1
GZ	321292-1	.VALVE- (UNIT EXCHANGE ITEM) (V7X000) (USED WITH CONNECTOR: MS3108R14-5S (V71468) (OPT (VK0316)))		1
		MISSING ITEM NO. NOT APPLICABLE		

– ITEM NOT ILLUSTRATED

IDENT	PART NUMBER	1234567 NOMENCLATURE	EFFECT FROM TO	UNITS PER ASSY
H-ZT	M300-1264	.RELAY- (VK6265) (USED WITH SOCKET: M12883-41-16 (V81349))		1
HA-DAH	25-8NF4443A	.TIME DELAY UNIT ASSY- (COMPRISING OF: TERMINAL BLOCK WBUN1193SS5B (VK0574))		1
HA-X	25-8NF4443A	.TIME DELAY UNIT ASSY- (COMPRISING OF: TERMINAL BLOCK WBUN1193SS5B (VK0574))		1
HG-DAB	M300-1264	.RELAY- (VK6265) (USED WITH SOCKET: M12883-41-16 (V81349))		1
HH-DAB	M300-1264	.RELAY- (VK6265) (USED WITH SOCKET: M12883-41-16 (V81349))		1
HJ-DAB	M300-1264	.RELAY- (VK6265) (USED WITH SOCKET: M12883-41-16 (V81349))		1
J-GG	HWBUN1146D10B	.TERMINAL BLOCK- (VK0574)		1
J-ZT	M300-1264	.RELAY- (VK6265) (USED WITH SOCKET: M12883-41-16 (V81349))		1
L1-ZT	MRTB20E57-111	.TERMINAL JUNCTION MODULE- (V14283)		1
L2-ZT	MRTB20E57-111	.TERMINAL JUNCTION MODULE- (V14283)		1
L3-ZT	MRTB20E57-111	.TERMINAL JUNCTION MODULE- (V14283)		1
L4-ZT	MRTB20E04-111	.TERMINAL JUNCTION MODULE- (V14283)		1
ME-DAC	BYW54	.DIODE- (VK0004)		1
M2-DAG	MRTB20E04-111	.TERMINAL JUNCTION MODULE- (V14283)		1
		MISSING ITEM NO. NOT APPLICABLE		

– ITEM NOT ILLUSTRATED

IDENT	PART NUMBER	1234567 NOMENCLATURE	EFFECT FROM TO	UNITS PER ASSY
NT-CG	25-6MC415	.SELECTOR ASSY-TEMPERATURE (COMPRISING OF: SELECTOR 627578-1 (V70210))		1
NU-CG	1TP1-5	.SWITCH- (V91929) (OPT (VK6596)) (PRE MOD 253210A)	094094 097097 102108 110115	1
NU-CG	1TP1-5M	.SWITCH- (V91929) (OPT (VK6596)) (MOD 253210A)		1
NW-CG	2TP1-10	.SWITCH- (V91929) (OPT (VK6596)) (PRE MOD 253210A)	094094 097097 102108 110115	1
NW-CG	2TP1-10M	.SWITCH- (V91929) (OPT (VK6596)) (MOD 253210A)		1
NX-CG	2TP1-10	.SWITCH- (V91929) (OPT (VK6596)) (PRE MOD 253210A)	094094 097097 102108 110115	1
NX-CG	2TP1-10M	.SWITCH- (V91929) (OPT (VK6596)) (MOD 253210A)		1
P1-ZT-P	BAEREF000003977	.CONNECTOR-PIN (6020-12-8PNCONDC (VK1793))		1
P1-ZT-R	BAEREF000004175	.CONNECTOR-SOCKET (6026-12-8SNCONDD (VK1793))		1
QE	321776-1-1	.VALVE- (UNIT EXCHANGE ITEM) (V7X000) (USED WITH CONNECTOR: MS3106R14S5S (V71468) (OPT (VK0316)))		1
QG	104968	.VALVE- (UNIT EXCHANGE ITEM) (V7X000) (USED WITH CONNECTOR: MS3106R14S5S (V71468) (OPT (VK0316)))		1
		MISSING ITEM NO. NOT APPLICABLE		

– ITEM NOT ILLUSTRATED

IDENT	PART NUMBER	1234567 NOMENCLATURE	EFFECT FROM TO	UNITS PER ASSY
QH	104568-3	.VALVE- (V7X000) (USED WITH CONNECTOR: MS3108R10SL3S (V71468) (OPT (VK0316)))		1
QJ	321262-1	.VALVE- (UNIT EXCHANGE ITEM) (V7X000) (USED WITH CONNECTOR: MS3108R14-5S (V71468) (OPT (VK0316)))		1
RG-DAB	BYW54	.DIODE- (VK0004)		1
RH-DAB	BYW54	.DIODE- (VK0004)		1
SJ	25-7FC379-97A	.BLOWER UNIT		1
SL	607148-1	.TEMPERATURE SENSOR- (V70210) (USED WITH CONNECTOR: MS3126E10-6S (V71468) (OPT (VK0316)))		1
TD-DAB	25-8NF4459-27A	.TIME DELAY UNIT		1
US	21346-5	.SWITCH- (V7X000) (USED WITH CONNECTOR: MS3108R10SL4S (V71468) (OPT (VK0316))) (PRE MOD 253293A) (FOR SPARES PROCURE 21346-6)		1
US	21346-6	.SWITCH- (V7X000) (USED WITH CONNECTOR: MS3108R10SL4S (V71468) (OPT (VK0316))) (MOD 253293A) (FOR SPARES PROCURE IN LIEU OF 21346-5)		1
UT	548408-1	.TEMPERATURE SENSOR- (V7X000) (USED WITH CONNECTOR: MS3108R10SL3S (V71468) (OPT (VK0316)))		1
		MISSING ITEM NO. NOT APPLICABLE		

– ITEM NOT ILLUSTRATED

IDENT	PART NUMBER	1234567 NOMENCLATURE	EFFECT FROM TO	UNITS PER ASSY
XN	B01A2-14128A	.VALVE- (VU1585) (USED WITH CONNECTOR: MS3126F8-3S (V71468) (OPT (VK0316)))		1
XN	MAP900-001	.VALVE- (VU1585) (USED WITH CONNECTOR: MS3126F8-3S (V71468) (OPT (VK0316))) (MOD 253532A)		1
XP	B01A2-14128A	.VALVE- (VU1585) (USED WITH CONNECTOR: MS3126F8-3S (V71468) (OPT (VK0316)))		1
XP	MAP900-001	.VALVE- (VU1585) (USED WITH CONNECTOR: MS3126F8-3S (V71468) (OPT (VK0316))) (MOD 253532A)		1
XQ	HE690011	.SWITCH- (VK2617) (USED WITH CONNECTOR: M83723-13R08-33N (VK1793))		1
XR	HE690011	.SWITCH- (VK2617) (USED WITH CONNECTOR: M83723-13R08-33N (VK1793))		1
X4-DAB	MRTB20E57-111	.TERMINAL JUNCTION MODULE- (V14283)		1
Y1-DAB	MRTB20E04-111	.TERMINAL JUNCTION MODULE- (V14283)		1
Y12-DAB	MRTB20E57-111	.TERMINAL JUNCTION MODULE- (V14283)		1
Y13-DAB	MRTB20E57-111	.TERMINAL JUNCTION MODULE- (V14283)		1
Y4-DAB	MRTB20E04-111	.TERMINAL JUNCTION MODULE- (V14283)		1
Y6-DAB	MRTB20E04-111	.TERMINAL JUNCTION MODULE- (V14283)		1
		MISSING ITEM NO. NOT APPLICABLE		

– ITEM NOT ILLUSTRATED

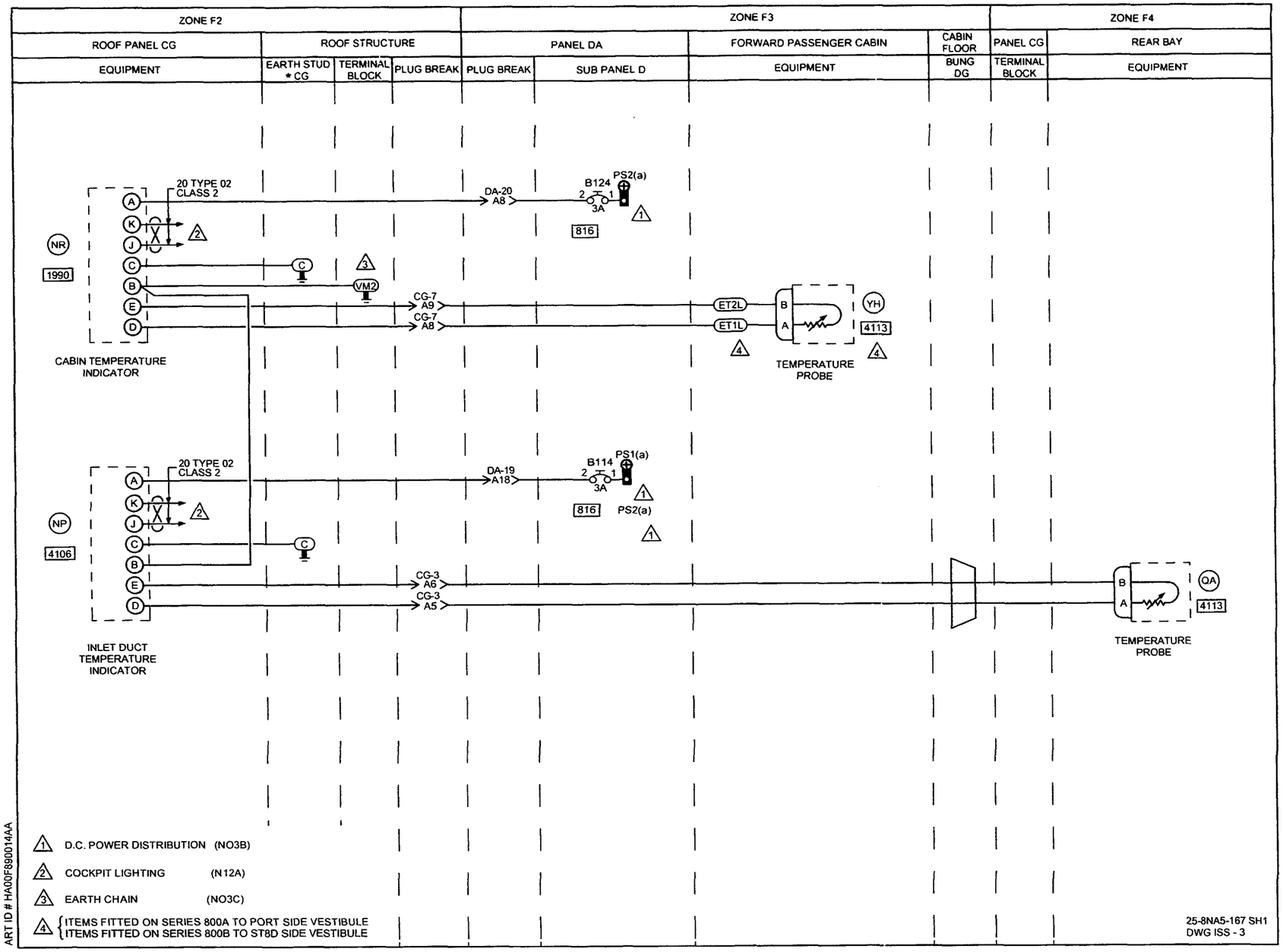
ZONE F2
ZONE F3
ZONE F4
ROOF PANEL CG
ROOF STRUCTURE
PANEL DA
FORWARD PASSENGER CABIN
CABIN FLOOR
PANEL CG
REAR BAY
EQUIPMENT
EARTH STUD * CG
TERMINAL BLOCK
PLUG BREAK
PLUG BREAK
SUB PANEL D
EQUIPMENT
BUNG DG
TERMINAL BLOCK
EQUIPMENT
20 TYPE 02 CLASS 2
DA-20 A8
B124
PS2(a)
816
NR
1990
CG-7 A9
CG-7 A8
ET2L
ET1L
YH
4113
CABIN TEMPERATURE INDICATOR
TEMPERATURE PROBE
20 TYPE 02 CLASS 2
DA-19 A18
B114
PS1(a)
816
PS2(a)
NP
4106
CG-3 A6
CG-3 A5
QA
4113
INLET DUCT TEMPERATURE INDICATOR
TEMPERATURE PROBE
1 D.C. POWER DISTRIBUTION (NO3B)
2 COCKPIT LIGHTING (N12A)
3 EARTH CHAIN (NO3C)
4 ITEMS FITTED ON SERIES 800A TO PORT SIDE VESTIBULE
ITEMS FITTED ON SERIES 800B TO ST8D SIDE VESTIBULE
25-8NA5-167 SH1
DWG ISS - 3
ART ID # HA00F890014AA

IDENT	PART NUMBER	1234567 NOMENCLATURE	EFFECT FROM TO	UNITS PER ASSY
		CABIN TEMPERATURE INDICATOR	091099	
	25-8NA5-167	WIRING DIAGRAM-		RF
		(MOD 253149C)		
B114-DAD	483TCG11J25-3A	.CIRCUIT BREAKER-3A		1
		(VU0091)		
B124-DAD	483TCG11J25-3A	.CIRCUIT BREAKER-3A		1
		(VU0091)		
CG3-P	MTC100YH1-003	.SHELL-PLUG		1
		(VK1010)		
		(USED WITH WAFERS:		
		TYPE A, MTC100KT1-1101		
		DUMMY, MTCX1X100-100)		
CG3-R	MTC100YH1-004	.SHELL-RECEPTACLE		1
		(VK1010)		
		(USED WITH WAFERS:		
		TYPE A, MTC100KT1-1103		
		DUMMY, MTCX1X100-100)		
CG7-P	MTC100YH2-009	.SHELL-PLUG		1
		(VK1010)		
		(USED WITH WAFERS:		
		TYPE A, MTC100KT2-1101		
		TYPE B, MTC100KT2-1102)		
CG7-R	MTC100YH2-010	.SHELL-RECEPTACLE		1
		(VK1010)		
		(USED WITH WAFERS:		
		TYPE A MTC100KT2-1103		
		TYPE B MTC100KT2-1104)		
DA19-P	MTC100YH2-009	.SHELL-PLUG		1
		(VK1010)		
		(USED WITH WAFERS:		
		TYPE A MTC100KT2-1101		
		TYPE B MTC100KT2-1102)		
DA19-R	MTC100YH2-010	.SHELL-RECEPTACLE		1
		(VK1010)		
		(USED WITH WAFERS:		
		TYPE A MTC100KT2-1103		
		TYPE B MTC100KT2-1104)		
DA20-P	MTC100YH2-009	.SHELL-PLUG		1
		(VK1010)		
		(USED WITH WAFERS:		
		TYPE A MTC100KT2-1101		
		TYPE B MTC100KT2-1102)		
DA20-R	MTC100YH2-010	.SHELL-RECEPTACLE		1
		(VK1010)		
		(USED WITH WAFERS:		
		TYPE A MTC100KT2-1103		
		TYPE B MTC100KT2-1104)		
DG	422255-8	.BUNG-		1
		(VK1793)		
		MISSING ITEM NO. NOT APPLICABLE		

– ITEM NOT ILLUSTRATED

IDENT	PART NUMBER	1234567 NOMENCLATURE	EFFECT FROM TO	UNITS PER ASSY
ET	HWBUN1146D3B	.TERMINAL BLOCK- (VK0574)		1
NP-CG	2132-01-0018	.INDICATOR-DUCT,AIR TEMPERATURE (UNIT EXCHANGE ITEM) (VU1588)		1
NR-CG	2132-01-0015	.INDICATOR-CABIN TEMPERATURE (UNIT EXCHANGE ITEM) (VK0574)		1
QA	S110G50-1957	.TEMPERATURE SENSOR- (VU1588) (USED WITH CONNECTOR: CA3106R12S3SF80 (V71468) (OPT (VK0316))		1
VM2	HWBUN1146S10B	.TERMINAL BLOCK- (VK0574)		1
YH	S110G50-1957	.TEMPERATURE SENSOR- (VU1588) (USED WITH CONNECTOR: CA3106R12SF80 (V71468) (OPT (VK0316))		1
		MISSING ITEM NO. NOT APPLICABLE		

– ITEM NOT ILLUSTRATED

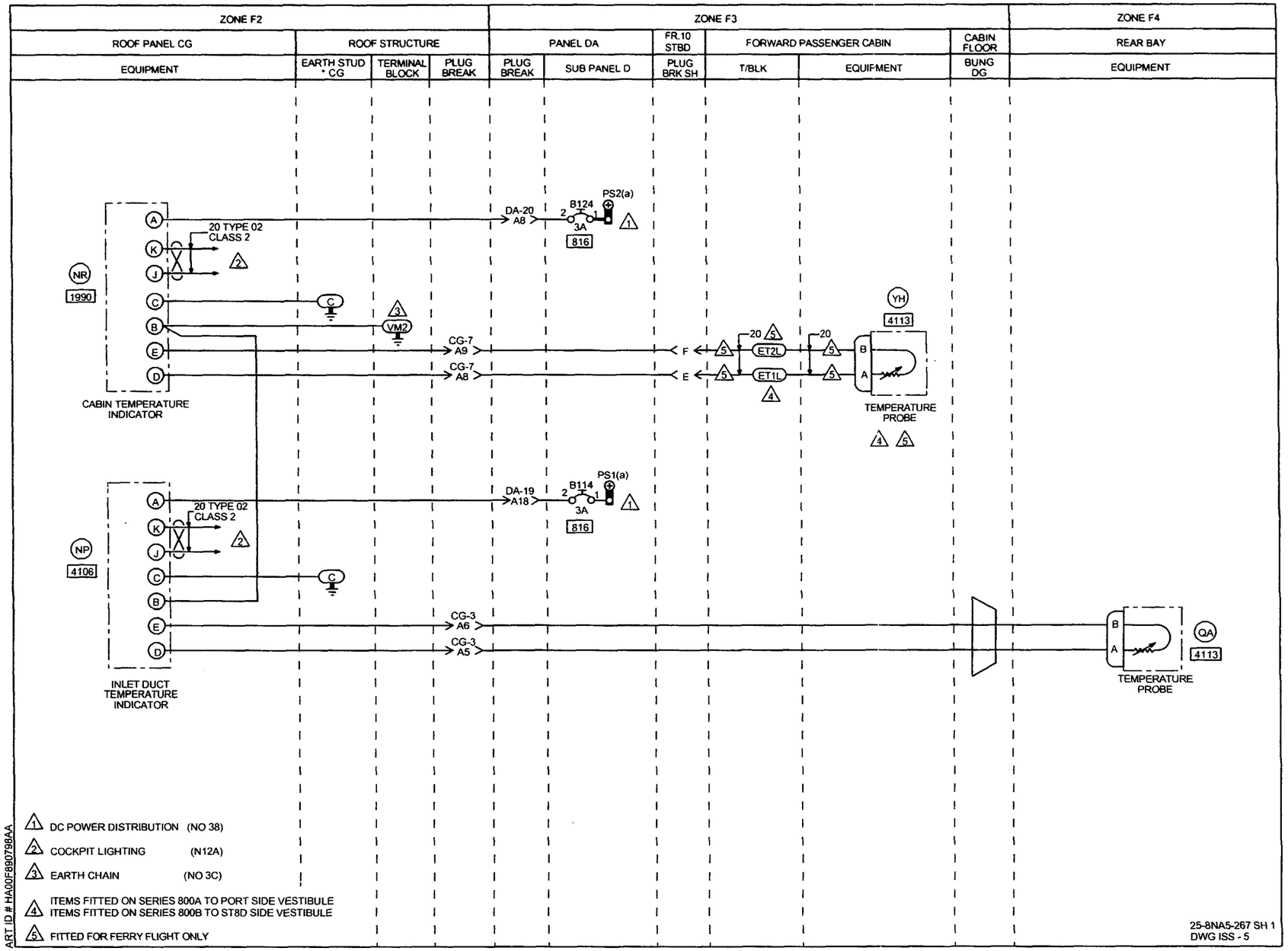
ZONE F2
ZONE F3
ZONE F4
ROOF PANEL CG
ROOF STRUCTURE
PANEL DA
FR.10 STBD
FORWARD PASSENGER CABIN
CABIN FLOOR
REAR BAY
EQUIPMENT
EARTH STUD • CG
TERMINAL BLOCK
PLUG BREAK
PLUG BREAK
SUB PANEL D
PLUG BRK SH
T/BLK
EQUIPMENT
BUNG DG
EQUIPMENT
NR
1990
CABIN TEMPERATURE INDICATOR
20 TYPE 02 CLASS 2
DA-20 A8
B124
PS2(a)
3A
816
CG-7 A9
CG-7 A8
ET2L
ET1L
YH
4113
TEMPERATURE PROBE
NP
4106
INLET DUCT TEMPERATURE INDICATOR
DA-19 A18
B114
PS1(a)
CG-3 A6
CG-3 A5
QA
4113
TEMPERATURE PROBE
1 DC POWER DISTRIBUTION (NO 38)
2 COCKPIT LIGHTING (N12A)
3 EARTH CHAIN (NO 3C)
4 ITEMS FITTED ON SERIES 800A TO PORT SIDE VESTIBULE
ITEMS FITTED ON SERIES 800B TO ST8D SIDE VESTIBULE
5 FITTED FOR FERRY FLIGHT ONLY
ART ID # HA00F890798AA
25-8NA5-267 SH 1
DWG ISS - 5

IDENT	PART NUMBER	1234567 NOMENCLATURE	EFFECT FROM TO	UNITS PER ASSY
		CABIN TEMPERATURE INDICATOR	100185 187207 209209 211225 228232 234234 236236 238276	
	25-8NA5-267	WIRING DIAGRAM- (MOD 253200H) (MOD 25F505A)		RF
B114-DAD	483TCG11J25-3A	.CIRCUIT BREAKER-3AMP (VU0091)		1
B124-DAD	483TCG11J25-3A	.CIRCUIT BREAKER-3AMP (VU0091)		1
CG3-P	MTC100YH1-003	.SHELL-PLUG (VK1010) (USED WITH WAFERS: TYPE A, MTC100KT1-1101 DUMMY, MTCX1X100-100)	100185 187207 209209 211225 228232 234234 236236 238254	1
CG3-P	MTC100YH1-003	.SHELL-PLUG (VK1010) (USED WITH INSERT: MTC100YC1-005)	255276	1
CG3-R	MTC100YH1-004	.SHELL-RECEPTACLE (VK1010) (USED WITH WAFERS: TYPE A, MTC100KT1-1103 DUMMY, MTCX1X100-100)	100185 187207 209209 211225 228232 234234 236236 238254	1
CG3-R	MTC100YH1-004	.SHELL-RECEPTACLE (VK1010) (USED WITH INSERT: MTC100YC1-006)	255276	1
CG7-P	MTC100YH2-009	.SHELL-PLUG (VK1010) (USED WITH WAFERS: TYPE A, MTC100KT2-1101 TYPE B, MTC100KT2-1102)	100185 187207 209209 211225 228232 234234 236236 238254	1
		MISSING ITEM NO. NOT APPLICABLE		

– ITEM NOT ILLUSTRATED

IDENT	PART NUMBER	1234567 NOMENCLATURE	EFFECT FROM TO	UNITS PER ASSY
CG7-P	MTC100YH2-009	.SHELL-PLUG (VK1010) (USED WITH INSERTS: PRIMARY MTC100YC1-001 SECONDARY MTC100YC1-002)	255276	1
CG7-R	MTC100YH2-010	.SHELL-RECEPTACLE (VK1010) (USED WITH WAFERS: TYPE A, MTC100KT2-1103 TYPE B, MTC100KT2-1104)	100185 187207 209209 211225 228232 234234 236236 238254	1
CG7-R	MTC100YH2-010	.SHELL-RECEPTACLE (VK1010) (USED WITH INSERTS: PRIMARY MTC100YC1-003 SECONDARY MTC100YC1-004)	255276	1
DA19-P	MTC100YH2-009	.SHELL-PLUG (VK1010) (USED WITH WAFERS: TYPE A, MTC100KT2-1101 TYPE B, MTC100KT2-1102)	100185 187207 209209 211225 228232 234234 236236 238254	1
DA19-P	MTC100YH2-009	.SHELL-PLUG (VK1010) (USED WITH INSERTS: PRIMARY MTC100YC1-001 SECONDARY MTC100YC1-002)	255276	1
DA19-R	MTC100YH2-010	.SHELL-RECEPTACLE (VK1010) (USED WITH WAFERS: TYPE A, MTC100KT2-1103 TYPE B, MTC100KT2-1104)	100185 187207 209209 211225 228232 234234 236236 238254	1
DA19-R	MTC100YH2-010	.SHELL-RECEPTACLE (VK1010) (USED WITH INSERTS: PRIMARY MTC100YC1-003 SECONDARY MTC100YC1-004)	255276	1

MISSING ITEM NO. NOT APPLICABLE

– ITEM NOT ILLUSTRATED

IDENT	PART NUMBER	1234567 NOMENCLATURE	EFFECT FROM TO	UNITS PER ASSY
DA20-P	MTC100YH2-009	.SHELL-PLUG (VK1010) (USED WITH WAFERS: TYPE A, MTC100KT2-1101 TYPE B, MTC100KT2-1102)	100185 187207 209209 211225 228232 234234 236236 238254	1
DA20-P	MTC100YH2-009	.SHELL-PLUG (VK1010) (USED WITH INSERTS: PRIMARY MTC100YC1-001 SECONDARY MTC100YC1-002)	255276	1
DA20-R	MTC100YH2-010	.SHELL-RECEPTACLE (VK1010) (USED WITH WAFERS: TYPE A, MTC100KT2-1103 TYPE B, MTC100KT2-1104)	100185 187207 209209 211225 228232 234234 236236 238254	1
DA20-R	MTC100YH2-010	.SHELL-RECEPTACLE (VK1010) (USED WITH INSERTS: PRIMARY MTC100YC1-003 SECONDARY MTC100YC1-004)	255276	1
DG	422255-8	.BUNG- (VK1793)		1
ET	HWBUN1146D3B	.TERMINAL BLOCK- (VK0574)		1
NP-CG	2132-01-0018	.INDICATOR-DUCT,AIR TEMPERATURE (UNIT EXCHANGE ITEM) (VU1588)		1
NR-CG	2132-01-0015	.INDICATOR-CABIN TEMPERATURE (UNIT EXCHANGE ITEM) (VK0574)		1
QA	S110G50-1957	.TEMPERATURE SENSOR- (VU1588) (USED WITH CONNECTOR: CA3106R12S3SF80 (V71468) (OPT (VK0316)))		1
SH-P	BAEREF000004029	.CONNECTOR-PIN (6026-10-6PNCONDD (VK1793))		1
SH-R	BAEREF000004180	.CONNECTOR-SOCKET (6027-10-6SNCONDD (VK1793))		1
		MISSING ITEM NO. NOT APPLICABLE		

— ITEM NOT ILLUSTRATED

IDENT	PART NUMBER	1234567 NOMENCLATURE	EFFECT FROM TO	UNITS PER ASSY
VM-CG	HWBUN1146S10B	.TERMINAL BLOCK- (VK0574)		1
YH	S110G50-1957	.TEMPERATURE SENSOR- (VU1588) (USED WITH CONNECTOR: CA3106R12SF80 (V71468) (OPT (VK0316)))		1
		MISSING ITEM NO. NOT APPLICABLE		

- ITEM NOT ILLUSTRATED

CHAPTER

22

AUTO FLIGHT

CHAPTER 22 - AUTO FLIGHT

TABLE OF CONTENTS

SUBJECT	CHAPTER SECTION UNIT	FIGURE	EFFECT
AUTO PILOT	22-10-00		
FLIGHT CONTROL SYSTEMS (RUDDER AND ELEVATOR SERVOS NO.1 AND NO.2)	22-10-40	53	
			110181
			183185
			187196
			198276

CH-SECT-UNIT-FIG	PAGE NO.	DATE
*22	1	AUG 31/03
22-10-00	1	MAY 31/02
22-10-40-53	0	MAY 31/02
22-10-40-53	1	MAY 31/02
22-10-40-53	2	MAY 31/02

CH-SECT-UNIT-FIG	PAGE NO.	DATE

*THE ASTERISK INDICATES PAGES CHANGED OR ADDED BY THE CURRENT REVISION

AUTO PILOT

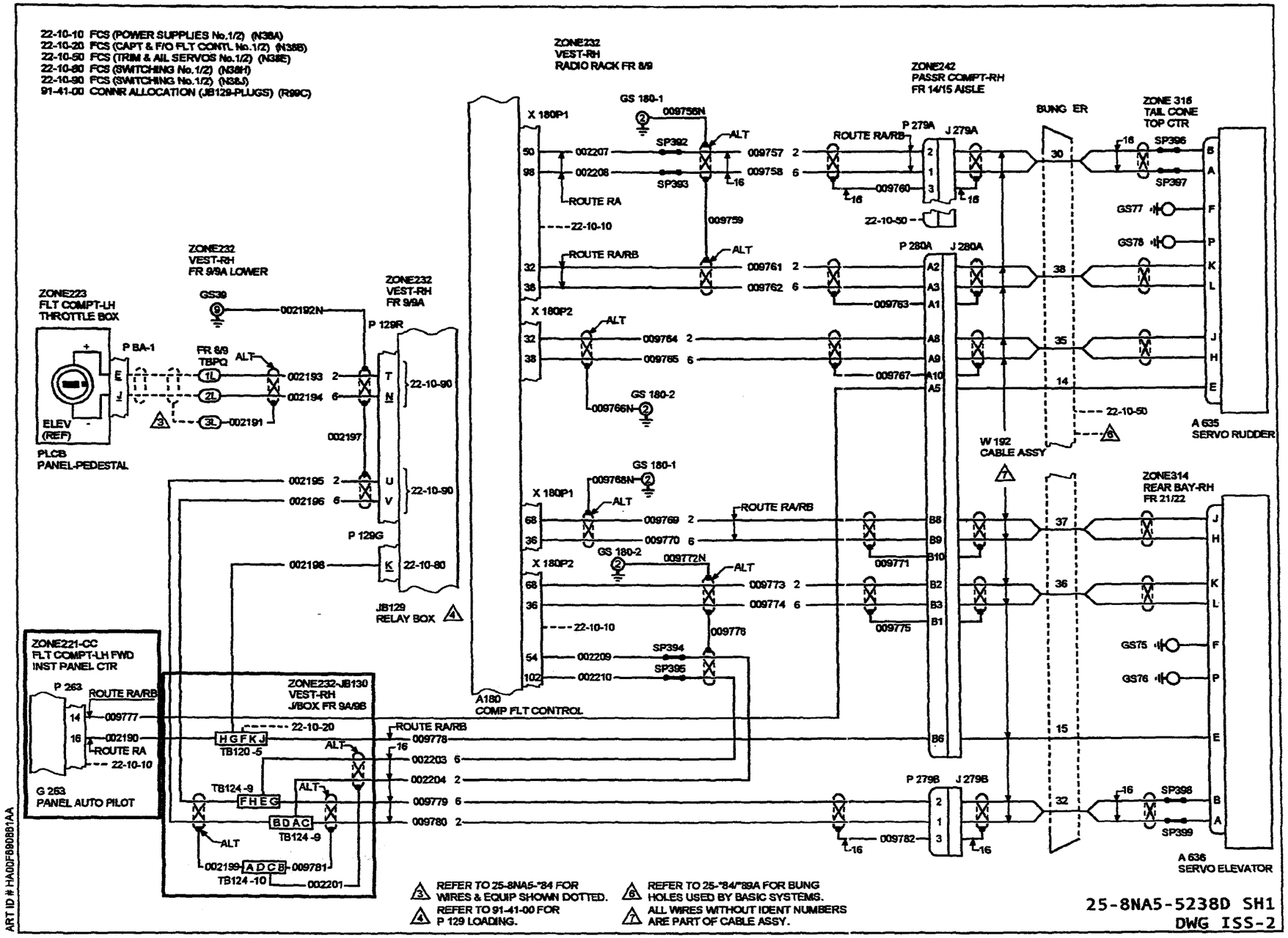
22-10-10 FCS (POWER SUPPLIES No.1/2) (N38A)
22-10-20 FCS (CAPT & F/O FLT CONTL No.1/2) (N38B)
22-10-50 FCS (TRIM & AIL SERVOS No.1/2) (N38E)
22-10-80 FCS (SWITCHING No.1/2) (N38H)
22-10-90 FCS (SWITCHING No.1/2) (N38J)
91-41-00 CONNR ALLOCATION (JB129-PLUGS) (R99C)
ZONE232
VEST-RH
RADIO RACK FR 8/9
ZONE242
PASSR COMPT-RH
FR 14/15 AISLE
ZONE 316
TAIL CONE
TOP CTR
BUNG ER
ZONE232
VEST-RH
FR 9/9A LOWER
ZONE223
FLT COMPT-LH
THROTTLE BOX
ZONE232
VEST-RH
FR 9/9A
PLCB
PANEL-PEDESTAL
JB129
RELAY BOX
A180
COMP FLT CONTROL
W 192
CABLE ASSY
A 635
SERVO RUDDER
ZONE314
REAR BAY-RH
FR 21/22
A 636
SERVO ELEVATOR
ZONE221-CC
FLT COMPT-LH FWD
INST PANEL CTR
G 253
PANEL AUTO PILOT
ZONE232-JB130
VEST-RH
J/BOX FR 9A/9B
REFER TO 25-8NA5-*84 FOR WIRES & EQUIP SHOWN DOTTED.
REFER TO 91-41-00 FOR P 129 LOADING.
REFER TO 25-*84/*89A FOR BUNG HOLES USED BY BASIC SYSTEMS.
ALL WIRES WITHOUT IDENT NUMBERS ARE PART OF CABLE ASSY.
25-8NA5-5238D SH1
DWG ISS-2
ART ID # HA00F890B61AA

IDENT	PART NUMBER	1234567 NOMENCLATURE	EFFECT FROM TO	UNITS PER ASSY
		FLIGHT CONTROL SYSTEMS (RUDDER AND ELEVATOR SERVOS NO.1 AND NO.2)	110181 183185 187196 198276	
	25-8NA5-5238D	WIRING DIAGRAM- (MOD 253187A)		RF
A180	622-6195-315	.FLIGHT CONTROL COMPUTER- (UNIT EXCHANGE ITEM) (V4V792) (OPT (VK0652))		1
A635	622-5027-001	.SERVO-RUDDER (V4V792) (OPT (VK0652)) (USED WITH SOCKET: 6026-14-19SWCONDE (VK1793))		1
A636	622-5027-001	.SERVO-ELEVATOR (V4V792) (OPT (VK0562)) (USED WITH SOCKET: 6026-14-19SWCONDE (VK1793))		1
ER	422252-12	.BUNG- (VK1793)		1
G263	622-6208-004	.AUTO PILOT PANEL- (V4V792) (OPT (VK0652))		1
J279A	MTCR161-04P	.CONNECTOR-PIN (VK1010)		1
J279B	MTCR161-04P	.CONNECTOR-PIN (VK1010)		1
J280A	MTC100YH1-004	.SHELL-RECEPTACLE (VK1010) (USED WITH WAFERS: TYPE A, MTC100KT1-1101 TYPE B, MTC100KT1-1102)	110181 183185 187196 198254	1
J280A	MTC100YH1-004	.SHELL-RECEPTACLE (VK1010) (USED WITH INSERT: MTC100YC1-005)	255276	1
PBA-1	BAEREF000003662	.CONNECTOR-PIN (6026-18-32PNCONDB (VK1793)) (USED WITH OUTLET: GTR71-18NACS1 (VU0419))		1
PLCB	25-8NF3589-3A	.PANEL ASSY-PEDESTAL (COMPRISING SOCKET: 6027-18-32SNCONDB (VK1793))		1
		MISSING ITEM NO. NOT APPLICABLE		

– ITEM NOT ILLUSTRATED

IDENT	PART NUMBER	1234567 NOMENCLATURE	EFFECT FROM TO	UNITS PER ASSY
P129G	BAEREF000003905	.CONNECTOR-SOCKET (6026-24-61SZCONDD (VK1793))		1
P129R	BAEREF000003897	.CONNECTOR-SOCKET (6026-22-55SNCONDD (VK1793))		1
P263	DDMA50S	.CONNECTOR-SOCKET (V71468) (OPT (VK0316)) (USED WITH: SCREWLOCK D20420-12 SHELL DD20964)		1
P279A	MTCR161-04S	.CONNECTOR-SOCKET (VK1010)		1
P279B	MTCR161-04S	.CONNECTOR-SOCKET (VK1010)		1
P280A	MTC100YH1-003	.SHELL-PLUG (VK1010) (USED WITH WAFERS: TYPE A, MTC100KT1-1103 TYPE B, MTC100KT1-1104)	110181 183185 187196 198254	1
P280A	MTC100YH1-003	.SHELL-PLUG (VK1010) (USED WITH INSERT: MTC100YC1-006)	255276	1
TBPQ	HWBUN1146D10B	.TERMINAL BLOCK- (VK0574)		1
TB120-5	MRTB20E03	.TERMINAL JUNCTION MODULE- (V14283)		1
TB124-10	MRTB16E03	.TERMINAL JUNCTION MODULE- (V14283)		1
TB124-9	MRTB16E03	.TERMINAL JUNCTION MODULE- (V14283)		1
W192	25-8NF3531	.CABLE ASSY- WIRING DATA FOR J279A,J279B,J280A		RF
X180P1	634-1388-001	.CONNECTOR- (V4V792) (OPT (VK0652))		1
X180P2	634-1388-001	.CONNECTOR- (V4V792) (OPT (VK0652))		1
		MISSING ITEM NO. NOT APPLICABLE		

– ITEM NOT ILLUSTRATED

CHAPTER 23

COMMUNICATIONS

CHAPTER 23 - COMMUNICATIONS

TABLE OF CONTENTS

SUBJECT	CHAPTER SECTION UNIT	FIGURE	EFFECT
PASSENGER ENTERTAINMENT SYSTEM	23-31-00		
COMPACT DISC PLAYER PLUG BREAK	23-31-10	65	184184
STEREO RADIO CASSETTE PLUG BREAK	23-31-10	58	133134
STEREO RADIO/CASSETTE MODULE	23-31-20	52	180180

CH-SECT-UNIT-FIG	PAGE NO.	DATE
*23	1	NOV 30/02
23-31-00	1	MAY 31/02
23-31-10-58	0	MAY 31/02
23-31-10-58	1	MAY 31/02
23-31-10-65	0	MAY 31/02
23-31-10-65	1	MAY 31/02
*23-31-20-52	0	NOV 30/02
23-31-20-52	1	MAY 31/02

CH-SECT-UNIT-FIG	PAGE NO.	DATE

*THE ASTERISK INDICATES PAGES CHANGED OR ADDED BY THE CURRENT REVISION

PASSENGER ENTERTAINMENT SYSTEM

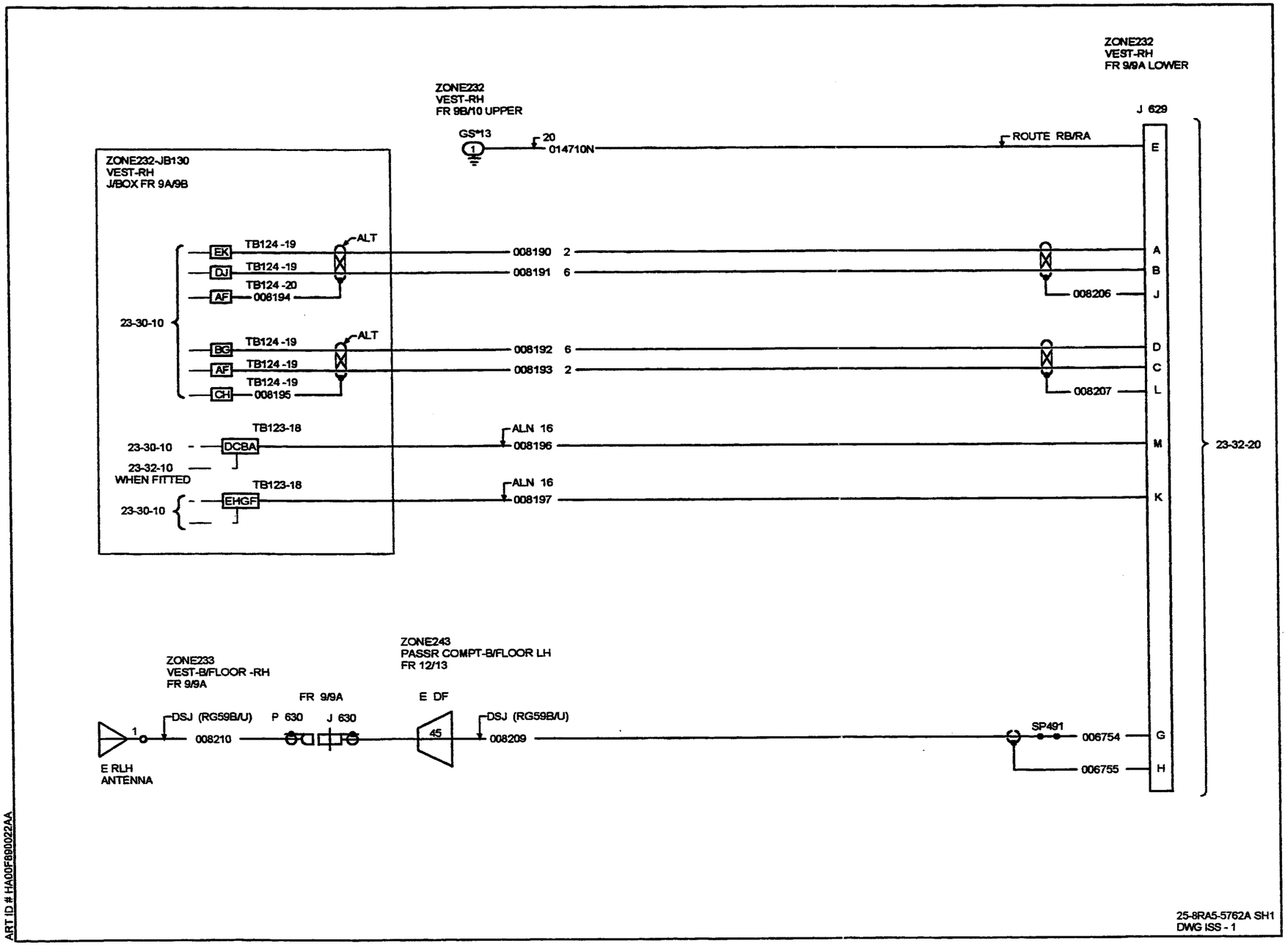
ZONE232
VEST-RH
FR 9/9A LOWER
ZONE232
VEST-RH
FR 9B/10 UPPER
J 629
GS*13
20
014710N
ROUTE RB/RA
E
ZONE232-JB130
VEST-RH
J/BOX FR 9A/9B
TB124 -19
ALT
EK
008190 2
A
DJ
008191 6
B
TB124 -20
AF
008194
008206
J
23-30-10
BC
008192 6
D
008193 2
C
CH
008195
008207
L
TB123-18
23-30-10
DCBA
ALN 16
008196
M
23-32-10
WHEN FITTED
EHGF
008197
K
23-32-20
ZONE233
VEST-B/FLOOR -RH
FR 9/9A
ZONE243
PASSR COMPT-B/FLOOR LH
FR 12/13
FR 9/9A
E DF
DSJ (RG59B/U)
P 630
J 630
45
008210
008209
SP491
006754
G
006755
H
E RLH
ANTENNA
ART ID # HA00F890022AA
25-8RA5-5762A SH1
DWG ISS - 1

IDENT	PART NUMBER	1234567 NOMENCLATURE	EFFECT FROM TO	UNITS PER ASSY
		STEREO RADIO CASSETTE PLUG BREAK	133134	
	25-8RA5-5762A	WIRING DIAGRAM- (MOD 259696A)		RF
EDF	422250-17	.BUNG- (VK1793)		1
ERLH	25-8FC919-1A	.ANTENNA		1
J629	BAEREF000003187	.CONNECTOR-SOCKET (6027-14-12SNCONDD) (VK1793)		1
J630	24TNC75-4-1C	.CONNECTOR- (V+1251)		1
P630	11TNC75-4-2C	.CONNECTOR- (V+1251)		1
TB123-18	MRTB16E03	.TERMINAL JUNCTION MODULE- (V14283)		1
TB124-19	MRTB20E09	.TERMINAL JUNCTION MODULE- (V14283)		1
TB124-20	MRTB20E09	.TERMINAL JUNCTION MODULE- (V14283)		1

MISSING ITEM NO. NOT APPLICABLE

- ITEM NOT ILLUSTRATED

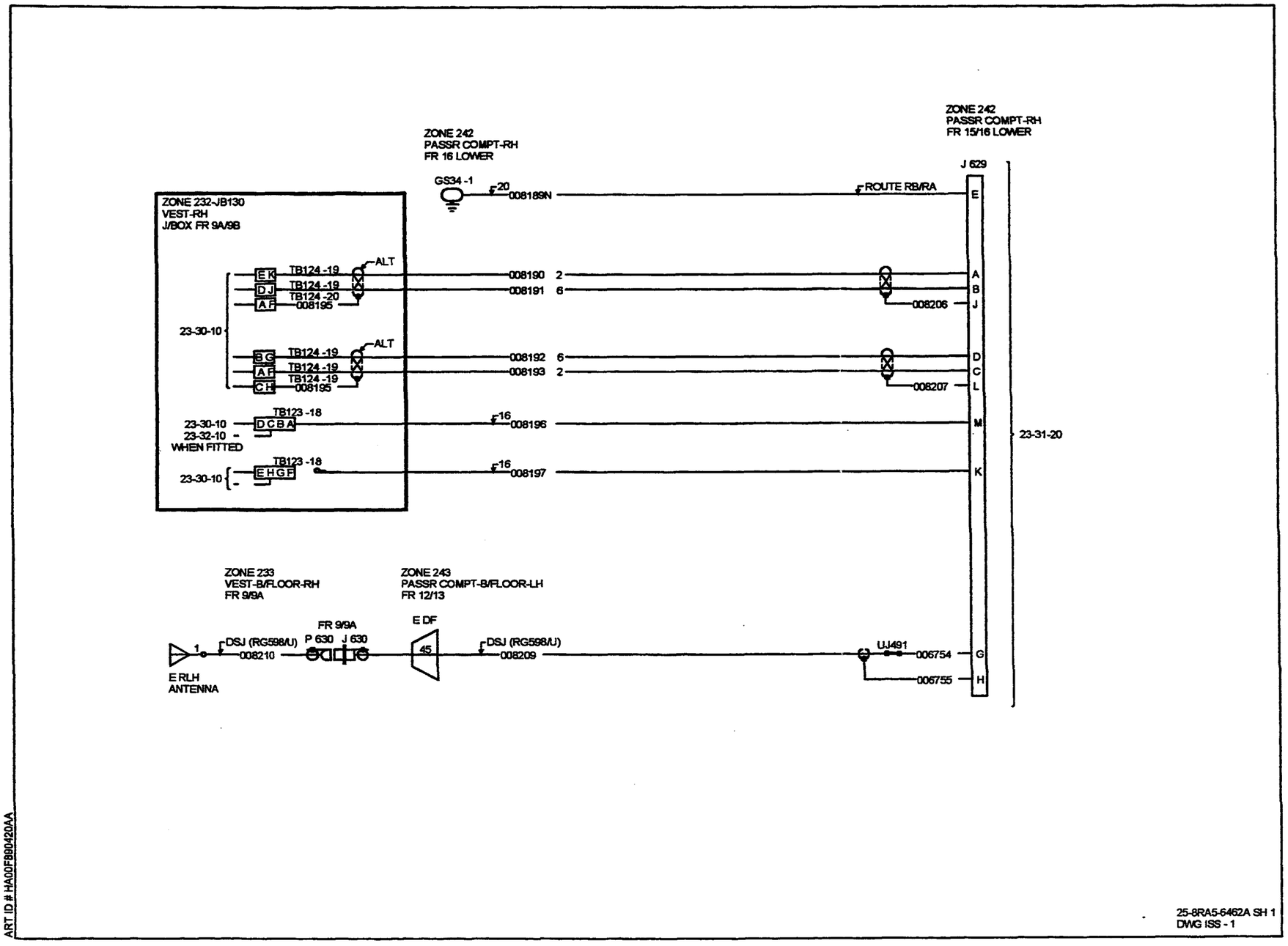

ART ID # HA00F890420AA

IDENT	PART NUMBER	1234567 NOMENCLATURE	EFFECT FROM TO	UNITS PER ASSY
		COMPACT DISC PLAYER PLUG BREAK	184184	
	25-8RA5-6462A	WIRING DIAGRAM- (MOD 259896A)		RF
EDF	422250-17	.BUNG- (VK1793)		1
ERLH	25-8FC919-1A	.ANTENNA		1
J629	BAEREF000003187	.CONNECTOR-SOCKET (6027-14-12SNCONDD) (VK1793)		1
J630	24TNC75-4-1C	.CONNECTOR- (V+1251)		1
P630	11TNC75-4-2C	.CONNECTOR- (V+1251)		1
TB123-18	MRTB16E03	.TERMINAL JUNCTION MODULE- (V14283)		1
TB124-19	MRTB20E09	.TERMINAL JUNCTION MODULE- (V14283)		1
TB124-20	MRTB20E09	.TERMINAL JUNCTION MODULE- (V14283)		1

MISSING ITEM NO. NOT APPLICABLE

- ITEM NOT ILLUSTRATED

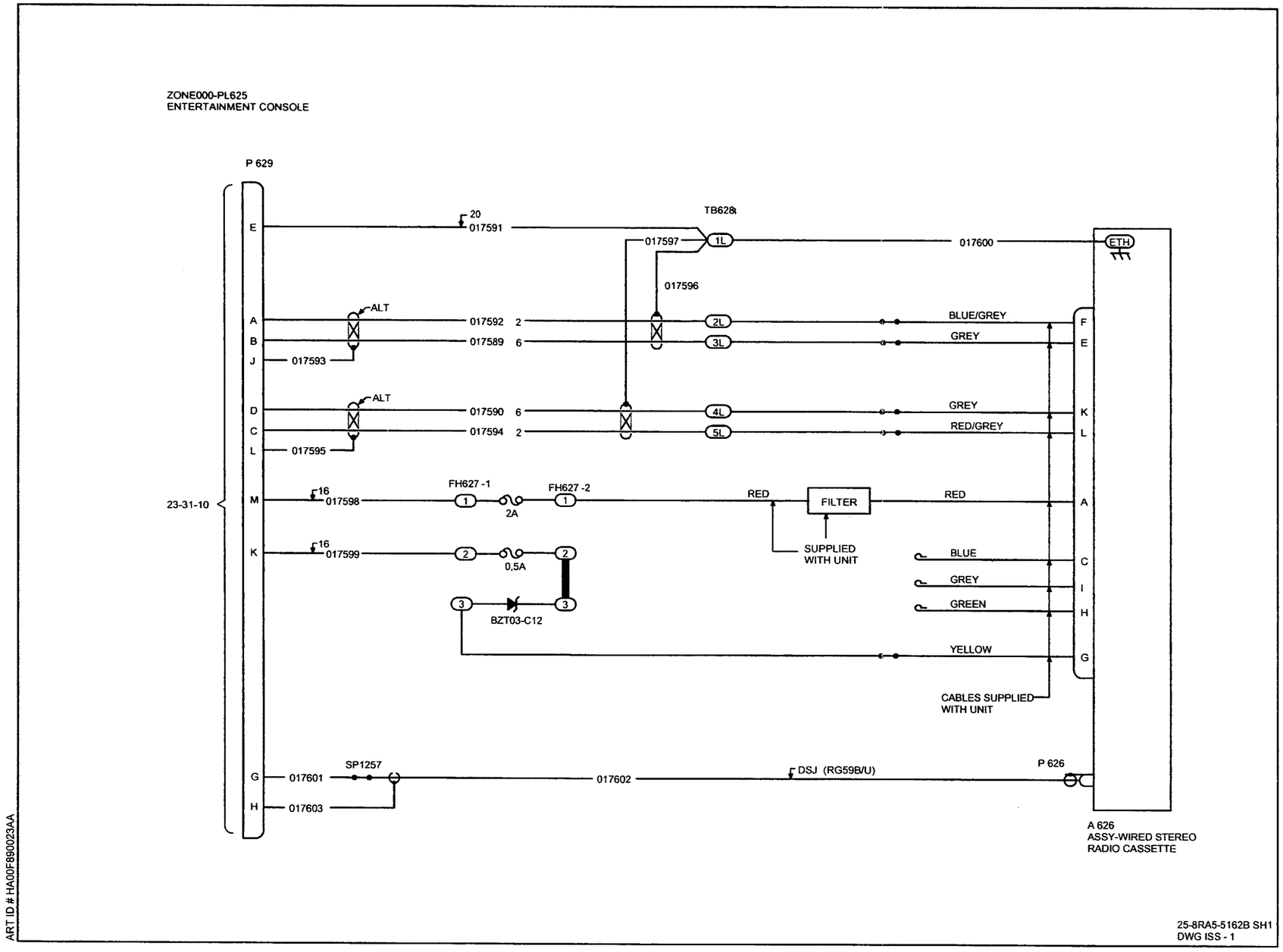
ZONE000-PL625
ENTERTAINMENT CONSOLE
P 629
23-31-10
E
A
B
J
D
C
L
M
K
G
H
20
017591
TB628
1L
017597
017600
ETH
017596
ALT
017592
2
2L
BLUE/GREY
017589
6
3L
GREY
017593
ALT
017590
6
4L
GREY
017594
2
5L
RED/GREY
017595
16
017598
FH627 -1
1
2A
FH627 -2
1
RED
FILTER
RED
SUPPLIED
WITH UNIT
16
017599
2
0,5A
2
BLUE
GREY
GREEN
3
BZT03-C12
3
YELLOW
CABLES SUPPLIED
WITH UNIT
F
E
K
L
A
C
I
H
G
SP1257
017601
017603
017602
DSJ (RG59B/U)
P 626
A 626
ASSY-WIRED STEREO
RADIO CASSETTE
ART ID # HA00F890023AA
25-8RA5-5162B SH1
DWG ISS - 1

IDENT	PART NUMBER	1234567 NOMENCLATURE	EFFECT FROM TO	UNITS PER ASSY
		STEREO RADIO/CASSETTE MODULE	180180	
	25-8RA5-5162B	WIRING DIAGRAM- (MOD 259842A)		RF
A626	25-8RF4219-1A	.STEREO RADIO CASSETTE		1
FH627-1	HWBUN1154D5B	.DISTRIBUTOR- (VK0574) (USED WITH: POSITION FH627-1-1/FH627-2-1 FUSE 2A 5920-99-0120074 POSITION FH627-1-2/FH627-2-2 FUSE 5920-99-0120072 (VK0657) POSITION FH627-1-3/FH627-2-3 ZENER DIODE BZT03C12 (VK0004))		1
FH627-2	HWBUN1154D5B	.DISTRIBUTOR- (VK0574)		1
P626	HH12N	.CONNECTOR- (V+1251)		1
P629	BAEREF000003509	.CONNECTOR-PIN (6026-14-12PNCONDD) (VK1793)		1
TB628	HWBUN1736D10B	.TERMINAL BLOCK- (VK0574) (OPT 72444-030-0AV2)		1

MISSING ITEM NO. NOT APPLICABLE

– ITEM NOT ILLUSTRATED

CHAPTER 24

ELECTRICAL POWER

CHAPTER 24 - ELECTRICAL POWER

TABLE OF CONTENTS

SUBJECT	CHAPTER SECTION UNIT	FIGURE	EFFECT
SECONDARY POWER SUPPLIES	24-21-00		
SECONDARY POWER SUPPLIES 1250VA INVERTERS	24-21-17	3	
			091152
			155163
			168170
			174174
SECONDARY POWER SUPPLIES 1500VA INVERTERS	24-21-17	4	
			153154
			164167
			171173
			175276

CHAPTER 24 - ELECTRICAL POWER

TABLE OF CONTENTS

SUBJECT	CHAPTER SECTION UNIT	FIGURE	EFFECT
DC GENERATION	24-30-00		
DC POWER NO.1 GENERATING SYSTEM	24-30-10	2	091276
DC POWER NO.2 GENERATING SYSTEM	24-30-20	2	092093
			095096
			098105
			107108
			111111
			113114
			117117
			119119
			121129
			132132
			135142
			144145
			147147
			150163
			166166
			168176
			178179
			181181
			183183
			185185
			187189
			191191
			193193
			195196
			199207
			209209
			214218
			220221
			223223
			225225
			229232
			234234
			236236
			238257
			259276
DC POWER NO.2 GENERATING SYSTEM	24-30-20	3	091091
			094094
			097097
			106106

CHAPTER 24 - ELECTRICAL POWER

TABLE OF CONTENTS

SUBJECT	CHAPTER SECTION UNIT	FIGURE	EFFECT
			109110
			112112
			115116
			118118
			120120
			130131
			133134
			143143
			146146
			148149
			164165
			167167
			177177
			180180
			182182
			184184
			186186
			190190
			192192
			194194
			197198
			208208
			210212
			219219
			222222
			224224
			226228
			233233
			235235
			237237
			258258

CHAPTER 24 - ELECTRICAL POWER

TABLE OF CONTENTS

SUBJECT	CHAPTER SECTION UNIT	FIGURE	EFFECT
ELECTRICAL LOAD DISTRIBUTION	24-50-00		
DC POWER DISTRIBUTION	24-50-01	5	092093
			095096
			098105
			107108
DC POWER DISTRIBUTION	24-50-01	6	111111
			113114
			117117
			119119
			121129
			132132
			135142
			144145
			147147
			150163
			166166
			168176
			178179
			181181
			183183
			185185
			187189
			191191
			193193
			195196
			199207
			209209
			214218
			220221
			223223
			225225
			229232
			234234
			236236
			238257
			259276
DC POWER DISTRIBUTION	24-50-01	7	091091
			094094
			097097
			106106
			109110

CHAPTER 24 - ELECTRICAL POWER

TABLE OF CONTENTS

SUBJECT	CHAPTER SECTION UNIT	FIGURE	EFFECT
			112112
			115116
			118118
			120120
			130131
			133134
			143143
			146146
			148149
			164165
			167167
			177177
			180180
			182182
			184184
			186186
			190190
			192192
			194194
			197198
			208208
			210212
			219219
			222222
			224224
			226228
			233233
			235235
			237237
			258258
DC POWER DISTRIBUTION	24-50-05	8	091093
			095096
			098098
			100101
DC POWER DISTRIBUTION	24-50-05	11	099099
DC POWER DISTRIBUTION	24-50-05	14	094094
			097097
			102163
			166166
			168176
			223223

CHAPTER 24 - ELECTRICAL POWER

TABLE OF CONTENTS

SUBJECT	CHAPTER SECTION UNIT	FIGURE	EFFECT
			225225
			229232
			234234
			236236
			238243
			246252
DC POWER DISTRIBUTION	24-50-05	15	164165
			167167
			177179
			181221
			244245
			253257
			259276
DC POWER DISTRIBUTION	24-50-07	67	212212
			240240
			243243
AC POWER DISTRIBUTION	24-53-00		
AC POWER DISTRIBUTION	24-53-10	6	091163
			166166
			168176
			223223
			225225
			229232
			234234
			236236
			238243
			246252
AC POWER DISTRIBUTION	24-53-10	8	164165
			167167
			177222
			224224
			226228
			233233
			235235
			237237
			244245
			253276

CHAPTER 24 - ELECTRICAL POWER

TABLE OF CONTENTS

SUBJECT	CHAPTER SECTION UNIT	FIGURE	EFFECT
EARTH/GROUND STATIONS	24-90-00		
EARTH CHAIN	24-90-01	5	091151
EARTH CHAIN	24-90-01	6	152276

CH-SECT-UNIT-FIG	PAGE NO.	DATE
*24	1	AUG 31/03
*24	2	AUG 31/03
*24	3	AUG 31/03
*24	4	AUG 31/03
*24	5	AUG 31/03
*24	6	AUG 31/03
*24	7	AUG 31/03
24-21-00	1	MAY 31/02
24-21-17- 3	0	NOV 30/02
24-21-17- 3	0A	NOV 30/02
24-21-17- 3	1	MAY 31/02
24-21-17- 3	2	MAY 31/02
24-21-17- 3	3	MAY 31/02
24-21-17- 3	4	MAY 31/02
24-21-17- 3	5	MAY 31/02
24-21-17- 3	6	MAY 31/02
24-21-17- 4	0	NOV 30/02
24-21-17- 4	0A	NOV 30/02
24-21-17- 4	1	MAY 31/02
24-21-17- 4	2	MAY 31/02
24-21-17- 4	3	MAY 31/02
24-21-17- 4	4	MAY 31/02
24-21-17- 4	5	MAY 31/02
24-21-17- 4	6	MAY 31/02
24-30-00	1	MAY 31/02
24-30-10- 2	0	NOV 30/02
24-30-10- 2	0A	NOV 30/02
24-30-10- 2	1	MAY 31/02
24-30-10- 2	2	MAY 31/02
24-30-10- 2	3	MAY 31/02
*24-30-10- 2	4	AUG 31/03
24-30-20- 2	0	NOV 30/02
24-30-20- 2	0A	NOV 30/02
24-30-20- 2	1	MAY 31/02
24-30-20- 2	2	MAY 31/02
24-30-20- 2	3	MAY 31/02
24-30-20- 2	4	MAY 31/02
24-30-20- 2	5	MAY 31/02
24-30-20- 2	6	MAY 31/02
24-30-20- 2	7	MAY 31/02
24-30-20- 2	8	MAY 31/02
24-30-20- 2	9	MAY 31/02
24-30-20- 2	10	MAY 31/02
*24-30-20- 2	11	AUG 31/03
24-30-20- 3	0	NOV 30/02
24-30-20- 3	0A	NOV 30/02
24-30-20- 3	1	MAY 31/02
24-30-20- 3	2	MAY 31/02
24-30-20- 3	3	MAY 31/02
24-30-20- 3	4	MAY 31/02
24-30-20- 3	5	MAY 31/02

CH-SECT-UNIT-FIG	PAGE NO.	DATE
24-30-20- 3	6	MAY 31/02
24-30-20- 3	7	MAY 31/02
24-30-20- 3	8	MAY 31/02
24-30-20- 3	9	MAY 31/02
24-30-20- 3	10	MAY 31/02
*24-30-20- 3	11	AUG 31/03
24-50-00	1	MAY 31/02
24-50-01- 5	0	MAY 31/02
24-50-01- 5	0A	NOV 30/02
24-50-01- 5	0B	NOV 30/02
24-50-01- 5	1	MAY 31/02
24-50-01- 5	2	MAY 31/02
24-50-01- 5	3	MAY 31/02
24-50-01- 5	4	MAY 31/02
24-50-01- 5	5	MAY 31/02
24-50-01- 5	6	MAY 31/02
24-50-01- 5	7	MAY 31/02
24-50-01- 5	8	MAY 31/02
24-50-01- 6	0	NOV 30/02
24-50-01- 6	0A	MAY 31/02
24-50-01- 6	0B	NOV 30/02
24-50-01- 6	1	MAY 31/02
24-50-01- 6	2	MAY 31/02
24-50-01- 6	3	MAY 31/02
24-50-01- 6	4	MAY 31/02
24-50-01- 6	5	MAY 31/02
24-50-01- 6	6	MAY 31/02
24-50-01- 6	7	MAY 31/02
24-50-01- 6	8	MAY 31/02
24-50-01- 6	9	MAY 31/02
24-50-01- 6	10	MAY 31/02
24-50-01- 6	11	MAY 31/02
24-50-01- 6	12	MAY 31/02
24-50-01- 6	13	MAY 31/02
24-50-01- 6	14	MAY 31/02
24-50-01- 6	15	MAY 31/02
24-50-01- 6	16	MAY 31/02
24-50-01- 6	17	MAY 31/02
24-50-01- 6	18	MAY 31/02
24-50-01- 6	19	MAY 31/02
24-50-01- 6	20	MAY 31/02
24-50-01- 6	21	MAY 31/02
24-50-01- 6	22	MAY 31/02
24-50-01- 6	23	MAY 31/02
24-50-01- 6	24	MAY 31/02
24-50-01- 6	25	MAY 31/02
24-50-01- 6	26	MAY 31/02
24-50-01- 6	27	MAY 31/02
24-50-01- 6	28	MAY 31/02
24-50-01- 6	29	MAY 31/02
24-50-01- 6	30	MAY 31/02

*THE ASTERISK INDICATES PAGES CHANGED OR ADDED BY THE CURRENT REVISION

CH-SECT-UNIT-FIG	PAGE NO.	DATE
24-50-01- 6	31	MAY 31/02
24-50-01- 6	32	MAY 31/02
24-50-01- 7	0	NOV 30/02
24-50-01- 7	0A	NOV 30/02
24-50-01- 7	0B	MAY 31/02
24-50-01- 7	1	MAY 31/02
24-50-01- 7	2	MAY 31/02
24-50-01- 7	3	MAY 31/02
24-50-01- 7	4	MAY 31/02
24-50-01- 7	5	MAY 31/02
24-50-01- 7	6	MAY 31/02
24-50-01- 7	7	MAY 31/02
24-50-01- 7	8	MAY 31/02
24-50-01- 7	9	MAY 31/02
24-50-01- 7	10	MAY 31/02
24-50-01- 7	11	MAY 31/02
24-50-01- 7	12	MAY 31/02
24-50-01- 7	13	MAY 31/02
24-50-01- 7	14	MAY 31/02
24-50-01- 7	15	MAY 31/02
24-50-01- 7	16	MAY 31/02
24-50-01- 7	17	MAY 31/02
24-50-01- 7	18	MAY 31/02
24-50-01- 7	19	MAY 31/02
24-50-01- 7	20	MAY 31/02
24-50-01- 7	21	MAY 31/02
24-50-01- 7	22	MAY 31/02
24-50-01- 7	23	MAY 31/02
24-50-01- 7	24	MAY 31/02
24-50-01- 7	25	MAY 31/02
24-50-01- 7	26	MAY 31/02
24-50-01- 7	27	MAY 31/02
24-50-01- 7	28	MAY 31/02
24-50-01- 7	29	MAY 31/02
24-50-01- 7	30	MAY 31/02
24-50-01- 7	31	MAY 31/02
24-50-01- 7	32	MAY 31/02
24-50-05- 8	0	NOV 30/02
24-50-05- 8	0A	NOV 30/02
24-50-05- 8	0B	MAY 31/02
24-50-05- 8	0C	NOV 30/02
24-50-05- 8	1	MAY 31/02
24-50-05- 8	2	MAY 31/02
24-50-05- 8	3	MAY 31/02
24-50-05- 8	4	MAY 31/02
24-50-05- 8	5	MAY 31/02
24-50-05- 8	6	MAY 31/02
24-50-05- 8	7	MAY 31/02
24-50-05- 8	8	MAY 31/02
24-50-05- 8	9	MAY 31/02
24-50-05- 8	10	MAY 31/02

CH-SECT-UNIT-FIG	PAGE NO.	DATE
24-50-05- 8	11	MAY 31/02
24-50-05- 8	12	MAY 31/02
24-50-05-11	0	NOV 30/02
24-50-05-11	0A	NOV 30/02
24-50-05-11	0B	NOV 30/02
24-50-05-11	0C	NOV 30/02
24-50-05-11	1	MAY 31/02
24-50-05-11	2	MAY 31/02
24-50-05-11	3	MAY 31/02
24-50-05-11	4	MAY 31/02
24-50-05-11	5	MAY 31/02
24-50-05-11	6	MAY 31/02
24-50-05-11	7	MAY 31/02
24-50-05-11	8	MAY 31/02
24-50-05-11	9	MAY 31/02
24-50-05-11	10	MAY 31/02
24-50-05-11	11	MAY 31/02
24-50-05-11	12	MAY 31/02
24-50-05-11	13	MAY 31/02
24-50-05-14	0	NOV 30/02
24-50-05-14	0A	NOV 30/02
24-50-05-14	0B	MAY 31/02
24-50-05-14	0C	MAY 31/02
24-50-05-14	1	MAY 31/02
24-50-05-14	2	MAY 31/02
24-50-05-14	3	MAY 31/02
24-50-05-14	4	MAY 31/02
24-50-05-14	5	MAY 31/02
24-50-05-14	6	MAY 31/02
24-50-05-14	7	MAY 31/02
24-50-05-14	8	MAY 31/02
24-50-05-14	9	MAY 31/02
24-50-05-14	10	MAY 31/02
24-50-05-14	11	MAY 31/02
24-50-05-14	12	MAY 31/02
24-50-05-14	13	MAY 31/02
24-50-05-15	0	NOV 30/02
24-50-05-15	0A	NOV 30/02
24-50-05-15	0B	NOV 30/02
24-50-05-15	0C	MAY 31/02
24-50-05-15	1	MAY 31/02
24-50-05-15	2	MAY 31/02
24-50-05-15	3	MAY 31/02
24-50-05-15	4	MAY 31/02
24-50-05-15	5	MAY 31/02
24-50-05-15	6	MAY 31/02
24-50-05-15	7	MAY 31/02
24-50-05-15	8	MAY 31/02
24-50-05-15	9	MAY 31/02
24-50-05-15	10	MAY 31/02
24-50-05-15	11	MAY 31/02

*THE ASTERISK INDICATES PAGES CHANGED OR ADDED BY THE CURRENT REVISION

CH-SECT-UNIT-FIG	PAGE NO.	DATE
24-50-05-15	12	MAY 31/02
24-50-05-15	13	MAY 31/02
24-50-07-67	0	MAY 31/02
24-50-07-67	1	MAY 31/02
24-53-00	1	MAY 31/02
24-53-10- 6	0	MAY 31/02
24-53-10- 6	1	MAY 31/02
24-53-10- 8	0	MAY 31/02
24-53-10- 8	1	MAY 31/02
24-90-00	1	MAY 31/02
24-90-01- 5	0	MAY 31/02
24-90-01- 5	1	MAY 31/02
24-90-01- 6	0	MAY 31/02
24-90-01- 6	1	MAY 31/02
24-90-01- 6	2	MAY 31/02

CH-SECT-UNIT-FIG	PAGE NO.	DATE

*THE ASTERISK INDICATES PAGES CHANGED OR ADDED BY THE CURRENT REVISION

SECONDARY POWER SUPPLIES

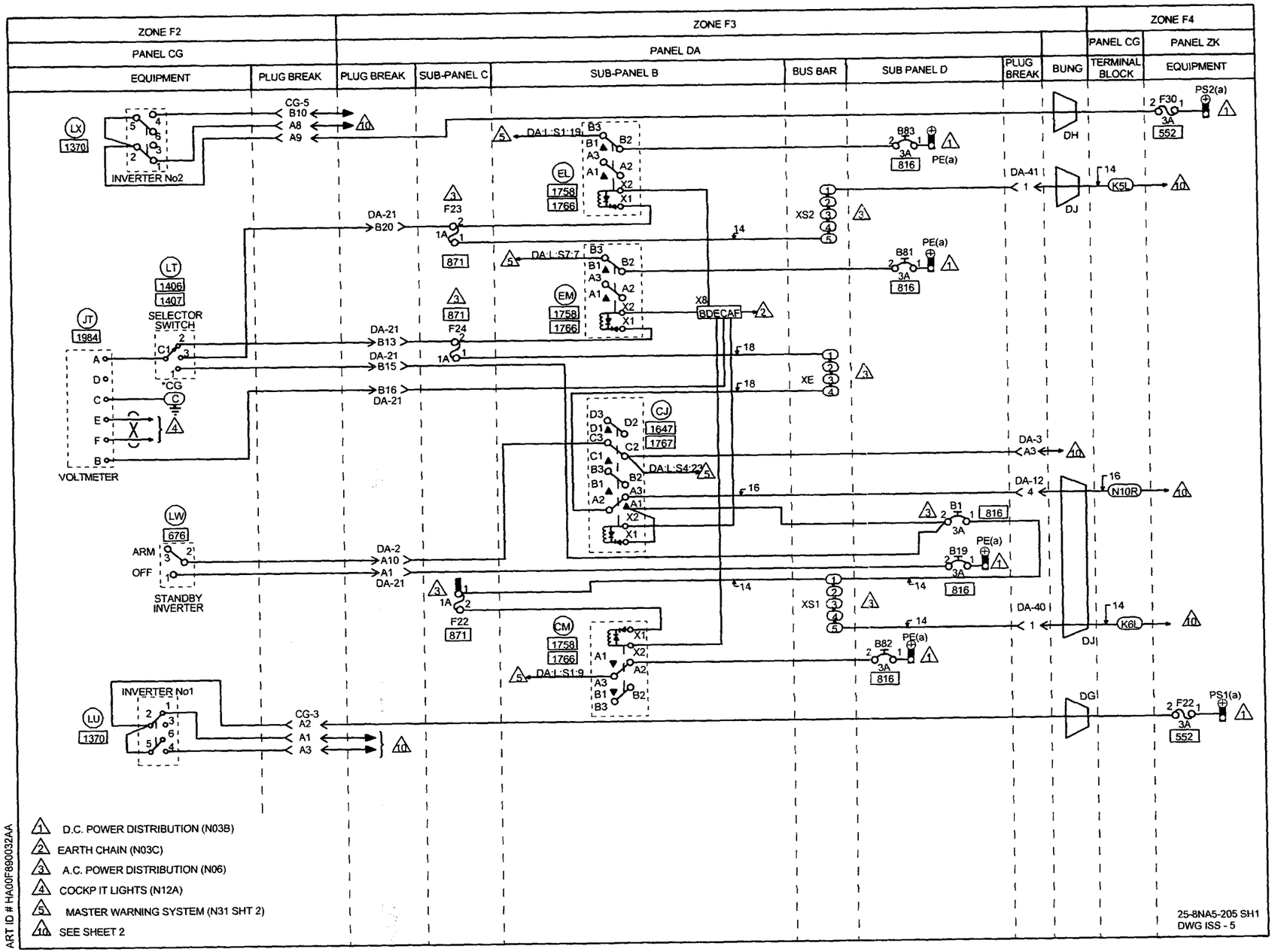
ZONE F2
ZONE F3
ZONE F4
PANEL CG
PANEL DA
PANEL CG
PANEL ZK
EQUIPMENT
PLUG BREAK
PLUG BREAK
SUB-PANEL C
SUB-PANEL B
BUS BAR
SUB PANEL D
PLUG BREAK
BUNG
TERMINAL BLOCK
EQUIPMENT
INVERTER No2
SELECTOR SWITCH
VOLTMETER
STANDBY INVERTER
INVERTER No1
DH
DJ
DG
K5L
K6L
N10R
PS2(a)
PS1(a)
PE(a)
1. D.C. POWER DISTRIBUTION (N03B)
2. EARTH CHAIN (N03C)
3. A.C. POWER DISTRIBUTION (N06)
4. COCKP IT LIGHTS (N12A)
5. MASTER WARNING SYSTEM (N31 SHT 2)
10. SEE SHEET 2
25-8NA5-205 SH1
DWG ISS - 5
ART ID # HA00F890032AA

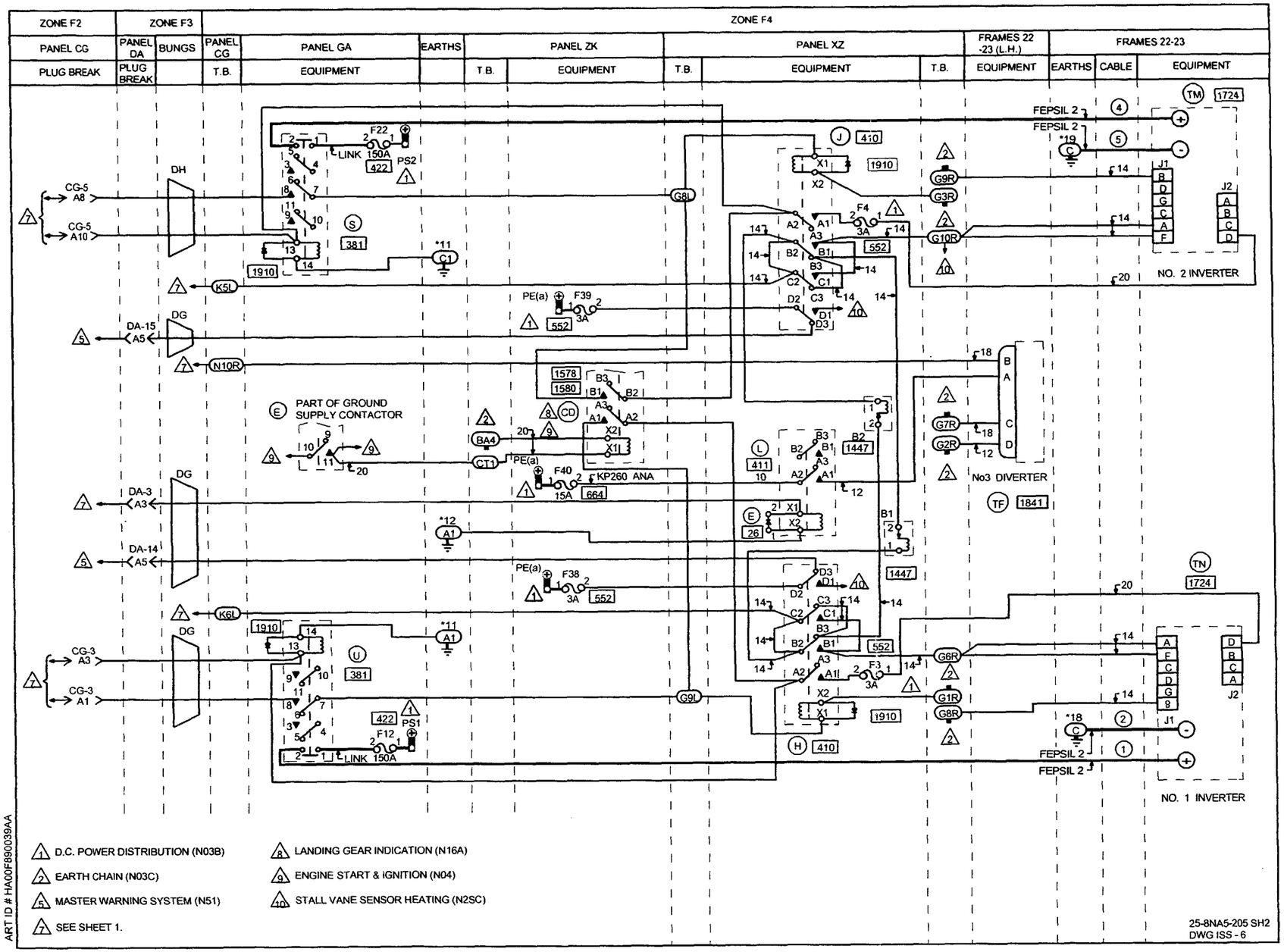
ZONE F2
ZONE F3
ZONE F4
PANEL CG
PANEL DA
BUNGS
PANEL CG
PANEL GA
EARTHS
PANEL ZK
PANEL XZ
FRAMES 22 -23 (L.H.)
FRAMES 22-23
PLUG BREAK
PLUG BREAK
T.B.
EQUIPMENT
T.B.
EQUIPMENT
T.B.
EQUIPMENT
T.B.
EQUIPMENT
EARTHS
CABLE
EQUIPMENT
CG-5 A8
CG-5 A10
DA-15 A5
DA-3 A3
DA-14 A5
CG-3 A3
CG-3 A1
DH
DG
PART OF GROUND SUPPLY CONTACTOR
LINK 150A
PS2
PS1
F22
F12
F39
F40
F38
F4
F3
KP260 ANA
No3 DIVERTER
NO. 2 INVERTER
NO. 1 INVERTER
FEPSIL 2
J1
J2
D.C. POWER DISTRIBUTION (N03B)
EARTH CHAIN (N03C)
MASTER WARNING SYSTEM (N51)
SEE SHEET 1.
LANDING GEAR INDICATION (N16A)
ENGINE START & IGNITION (N04)
STALL VANE SENSOR HEATING (N2SC)
ART ID # HA00F890039AA
25-8NA5-205 SH2
DWG ISS - 6

IDENT	PART NUMBER	1234567 NOMENCLATURE	EFFECT FROM TO	UNITS PER ASSY
		SECONDARY POWER SUPPLIES 1250VA INVERTERS	091152 155163 168170 174174	
	25-8NA5-205	WIRING DIAGRAM- (MOD 253149C)		RF
BA-ZK	HWBUN1146S10B	.TERMINAL BLOCK- (VK0574)		1
B1-DAD	483TCG11J5-3A	.CIRCUIT BREAKER-3AMP (VU0091)		1
B1-XZ	7MC1-202-10	.CIRCUIT BREAKER-10AMP (VK0142)		1
B19-DAD	483TCG11J5-3A	.CIRCUIT BREAKER-3AMP (VU0091)		1
B2-XZ	7MC1-202-10	.CIRCUIT BREAKER-10AMP (VK0142)		1
B81-DAD	483TCG11J5-3A	.CIRCUIT BREAKER-3AMP (VU0091)		1
B82-DAD	483TCG11J5-3A	.CIRCUIT BREAKER-3AMP (VU0091)		1
B83-DAD	483TCG11J5-3A	.CIRCUIT BREAKER-3AMP (VU0091)		1
CD-ZK	M400-1265	.RELAY- (VK6265) (USED WITH SOCKET: M12883-40-19 (V81349))		1
CG3-P	MTC100YH1-003	.SHELL-PLUG (VK1010) (USED WITH WAFERS: TYPE A, MTC100KT1-1101 DUMMY, MTCX1X100-100)		1
CG3-R	MTC100YH1-004	.SHELL-RECEPTACLE (VK1010) (USED WITH WAFERS: TYPE A, MTC100KT1-1103 DUMMY, MTCX1X100-100)		1
CG5-P	MTC100YH1-003	.SHELL-PLUG (VK1010) (USED WITH WAFERS: TYPE A, MTC100KT1-1101 TYPE B, MTC100KT1-1102)		1
CG5-R	MTC100YH1-004	.SHELL-RECEPTACLE (VK1010) (USED WITH WAFERS: TYPE A, MTC100KT1-1103 TYPE B, MTC100KT1-1104)		1
		MISSING ITEM NO. NOT APPLICABLE		

– ITEM NOT ILLUSTRATED

IDENT	PART NUMBER	1234567 NOMENCLATURE	EFFECT FROM TO	UNITS PER ASSY
CJ-DAB	M401D4F	.RELAY- (VK6265) (USED WITH SOCKET: M12883-40-20 (V81349))		1
CM-DAB	M301D4F	.RELAY- (VK6265) (USED WITH BASE: S300B1B0)		1
CT-ZK	HWBUN1146S10B	.TERMINAL BLOCK- (VK0574)		1
DA12-P	MTCR161-04P	.CONNECTOR-PIN (VK1010)		1
DA12-R	MTCR101-04S	.CONNECTOR-SOCKET (VK1010)		1
DA14-P	MTC100YH1-003	.SHELL-PLUG (VK1010) (USED WITH WAFERS: TYPE A, MTC100KT1-1101 TYPE B, MTC100KT1-1102)		1
DA14-R	MTC100YH1-004	.SHELL-RECEPTACLE (VK1010) (USED WITH WAFERS: TYPE A, MTC100KT1-1103 TYPE B, MTC100KT1-1104)		1
DA15-P	MTC100YH1-003	.SHELL-PLUG (VK1010) (USED WITH WAFERS: TYPE A, MTC100KT1-1101 TYPE B, MTC100KT1-1102)		1
DA15-R	MTC100YH1-004	.SHELL-RECEPTACLE (VK1010) (USED WITH WAFERS: TYPE A, MTC100KT1-1103 TYPE B, MTC100KT1-1104)		1
DA21-P	MTC100YH2-009	.SHELL-PLUG (VK1010) (USED WITH WAFERS: TYPE A, MTC100KT2-1101 TYPE B, MTC100KT2-1102)		1
DA21-R	MTC100YH2-010	.SHELL-RECEPTACLE (VK1010) (USED WITH WAFERS: TYPE A, MTC100KT2-1103 TYPE B, MTC100KT2-1104)		1
DA3-P	MTC100YH1-003	.SHELL-PLUG (VK1010) (USED WITH WAFERS: TYPE A, MTC100KT1-1101 TYPE B, MTC100KT1-1102)		1
		MISSING ITEM NO. NOT APPLICABLE		

– ITEM NOT ILLUSTRATED

IDENT	PART NUMBER	1234567 NOMENCLATURE	EFFECT FROM TO	UNITS PER ASSY
DA3-R	MTC100YH1-004	.SHELL-RECEPTACLE (VK1010) (USED WITH WAFERS: TYPE A, MTC100KT1-1103 TYPE B, MTC100KT1-1104)		1
DA40-P	MTCR161-04P	.CONNECTOR-PIN (VK1010)		1
DA40-R	MTCR101-04S	.CONNECTOR-SOCKET (VK1010)		1
DA41-P	MTCR161-04P	.CONNECTOR-PIN (VK1010)		1
DA41-R	MTCR101-04S	.CONNECTOR-SOCKET (VK1010)		1
DG	422255-8	.BUNG- (VK1793)		1
DH	422255-9	.BUNG- (VK1793)		1
DJ	422255-7	.BUNG- (VK1793)		1
E-GA	LDG150Y4	.CONTACTOR- (VK4358)		1
E-XZ	CV7313	.DIODE- (VK0004)		1
EL-DAB	M301D4F	.RELAY- (VK6265) (USED WITH BASE: S300B1B0)		1
EM-DAB	M301D4F	.RELAY- (VK6265) (USED WITH BASE: S300B1B0)		1
F12-GA	L133CA150	.FUSE-150AMP (VU0154)		1
F22-DAC	5920-99-0120073	.FUSE-1AMP (VK0574)		1
F22-GA	L133CA150	.FUSE-150AMP (VU0154)		1
F22-ZK	5920-00-0120075	.FUSE-3AMP (VK0657)		1
F23-DAC	5920-99-0120073	.FUSE-1AMP (VK0574)		1
F24-DAC	5920-99-0120073	.FUSE-1AMP (VK0574)		1
F3-XZ	5920-99-0120075	.FUSE-3AMP (VK0657)		1
F30-ZK	5920-00-0120075	.FUSE-3AMP (VK0657)		1
F38-ZK	5920-00-0120075	.FUSE-3AMP (VK0657)		1
		MISSING ITEM NO. NOT APPLICABLE		

– ITEM NOT ILLUSTRATED

IDENT	PART NUMBER	1234567 NOMENCLATURE	EFFECT FROM TO	UNITS PER ASSY
F39-ZK	5920-00-0120075	.FUSE-3AMP (VK0657)		1
F4-XZ	5920-99-0120075	.FUSE-3AMP (VK0657)		1
F40-ZK	5920-99-0120079	.FUSE-15AMP (VK0657)		1
G-XZ	HWBUN1146D10B	.TERMINAL BLOCK- (VK0574)		1
H-XZ	9274-4024	.RELAY- (VK6265) (PRE MOD 253084A) (FOR SPARES PROCURE 9274-6205 (VK6265)) (USED WITH DIODE ASSY: 25-7NF1815-5A)		1
H-XZ	9274-6205	.RELAY- (VK6265) (MOD 253084A) (FOR SPARES PROCURE IN LIEU OF 9274-4024) (VK6265)) (USED WITH DIODE ASSY: 25-7NF1815-5A)		1
J-XZ	9274-4024	.RELAY- (VK6265) (PRE MOD 253084A) (FOR SPARES PROCURE 9274-6205 (VK6265)) (USED WITH DIODE ASSY: 25-7NF1815-5A)		1
J-XZ	9274-6205	.RELAY- (VK6265) (MOD 253084A) (FOR SPARES PROCURE IN LIEU OF 9274-4024 (V6265)) (USED WITH DIODE ASSY: 25-7NF1815-5A)		1
JT-CG	2132-01-0014	.VOLTMETER- (UNIT EXCHANGE ITEM) (VU1588)		1
K-CG	HWBUN1146D10B	.TERMINAL BLOCK- (VK0574)		1
L-XZ	9330-4026	.RELAY- (VK6265)		1
		MISSING ITEM NO. NOT APPLICABLE		

- ITEM NOT ILLUSTRATED

IDENT	PART NUMBER	1234567 NOMENCLATURE	EFFECT FROM TO	UNITS PER ASSY
LT-CG	8A36-01-1-03N	.SWITCH- (V81073)		1
LU-CG	2TP1-70	.SWITCH- (V91929) (OPT (VK6596)) (PRE MOD 253210A)		1
LU-CG	2TP1-70M	.SWITCH- (V91929) (OPT (VK6596)) (MOD 253210A)		1
LW-CG	1TP1-31	.SWITCH- (V91929) (OPT (VK6596)) (PRE MOD 253210A)		1
LW-CG	1TP1-31M	.SWITCH- (V91929) (OPT (VK6596)) (MOD 253210A)		1
LX-CG	2TP1-70	.SWITCH- (V91929) (OPT (VK6596)) (PRE MOD 253210A)		1
LX-CG	2TP1-70M	.SWITCH- (V91929) (OPT (VK6596)) (MOD 253210A)		1
N-CG	HWBUN1146D10B	.TERMINAL BLOCK- (VK0574)		1
S-GA	LDA200B18C	.RELAY- (VK4358)		1
TF	PC250	.INVERTER-NO.3 STATIC (V07181)		1
TF-P	MS3106R18-9S	.CONNECTOR-SOCKET (V71468) (OPT (VK0316))		1
TM	501-1235-01	.INVERTER-NO.2 MAIN (UNIT EXCHANGE ITEM) (V25583)		1
TM-P	MS3108R24-2P	.CONNECTOR-PIN (V71468) (OPT (VK0316))		1
TM-R	MS3126E8-4S	.CONNECTOR-SOCKET (V71468) (OPT (VK0316))		1
TN	501-1235-01	.INVERTER-NO.1 MAIN (UNIT EXCHANGE ITEM) (V25583)		1
TN-P	MS3108R24-2P	.CONNECTOR-PIN (V71468) (OPT (VK0316))		1
		MISSING ITEM NO. NOT APPLICABLE		

– ITEM NOT ILLUSTRATED

IDENT	PART NUMBER	1234567 NOMENCLATURE	EFFECT FROM TO	UNITS PER ASSY
TN-R	MS3126E8-4S	.CONNECTOR-SOCKET (V71468) (OPT (VK0316))		1
U-GA	LDA200B18C	.RELAY- (VK4358)		1
X8-DAB	MRTB20E04-111	.TERMINAL JUNCTION MODULE- (V14283)		1
		MISSING ITEM NO. NOT APPLICABLE		

– ITEM NOT ILLUSTRATED

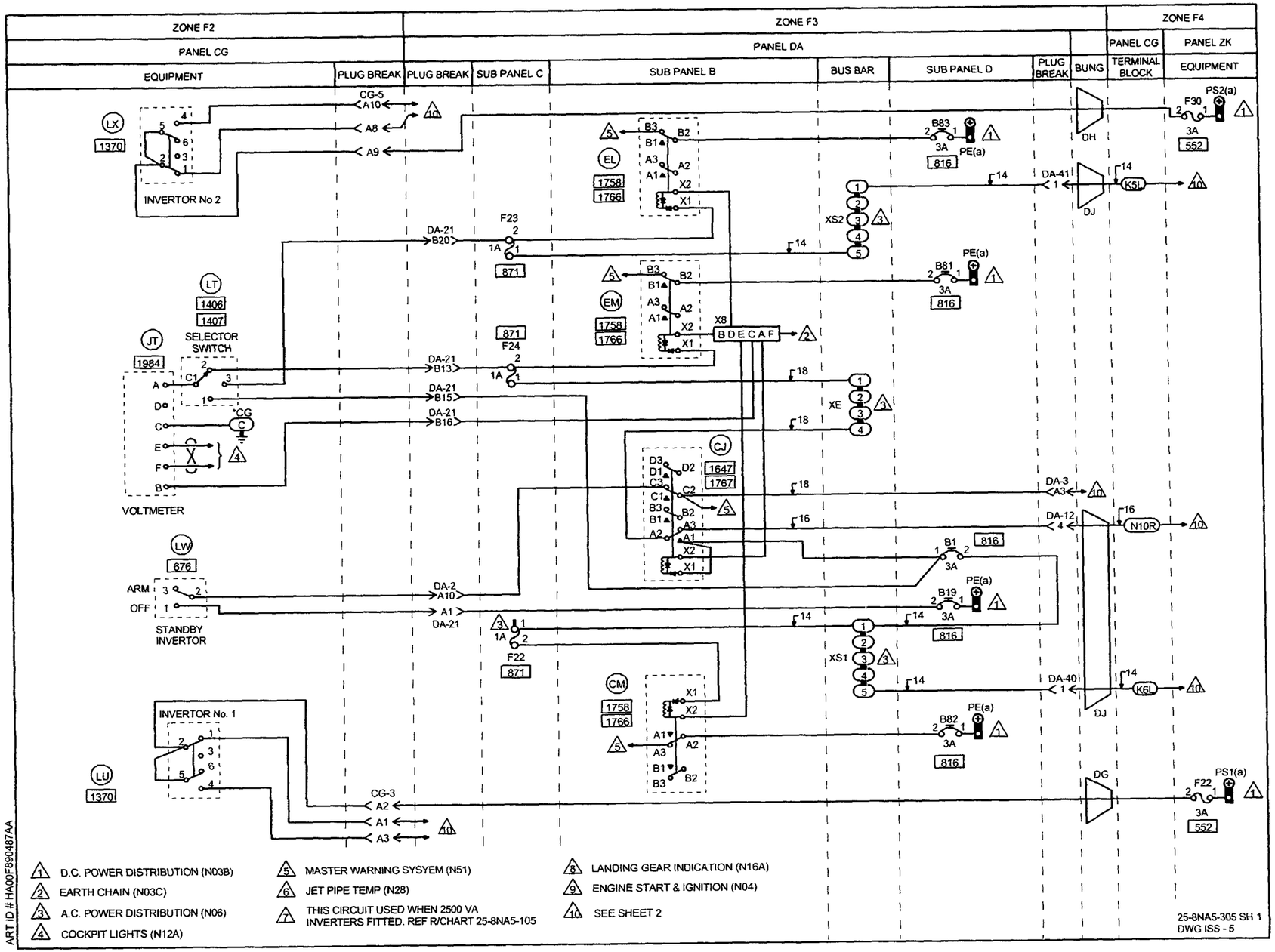
ZONE F2
ZONE F3
ZONE F4
PANEL CG
PANEL DA
PANEL CG
PANEL ZK
EQUIPMENT
PLUG BREAK
PLUG BREAK
SUB PANEL C
SUB PANEL B
BUS BAR
SUB PANEL D
PLUG BREAK
BUNG
TERMINAL BLOCK
EQUIPMENT
INVERTOR No 2
SELECTOR SWITCH
VOLTMETER
STANDBY INVERTOR
INVERTOR No. 1
D.C. POWER DISTRIBUTION (N03B)
EARTH CHAIN (N03C)
A.C. POWER DISTRIBUTION (N06)
COCKPIT LIGHTS (N12A)
MASTER WARNING SYSYEM (N51)
JET PIPE TEMP (N28)
THIS CIRCUIT USED WHEN 2500 VA INVERTERS FITTED. REF R/CHART 25-8NA5-105
LANDING GEAR INDICATION (N16A)
ENGINE START & IGNITION (N04)
SEE SHEET 2
25-8NA5-305 SH 1
DWG ISS - 5
ART ID # HA00F890487AA

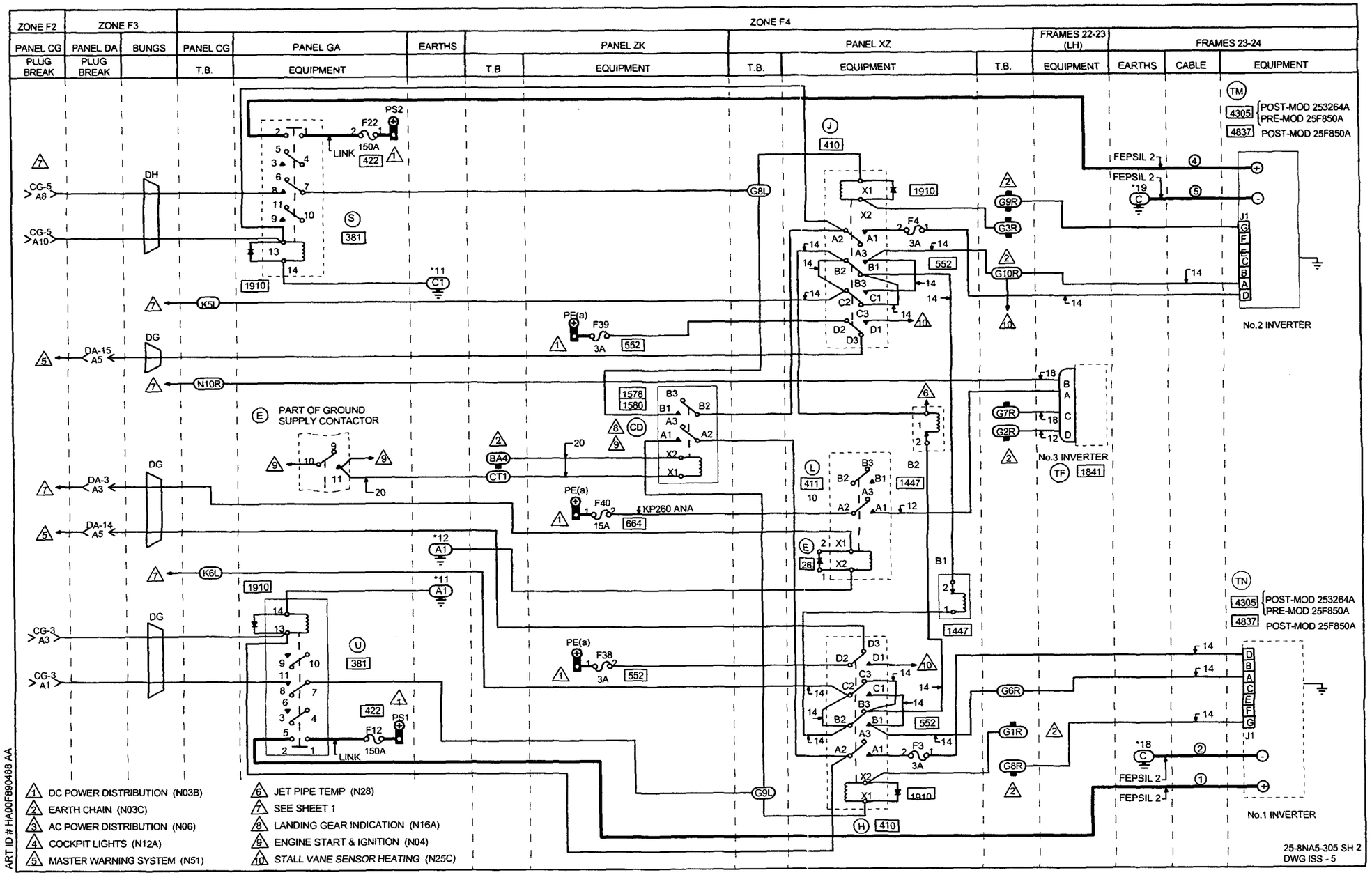
ZONE F2
ZONE F3
ZONE F4
PANEL CG
PLUG BREAK
PANEL DA
PLUG BREAK
BUNGS
PANEL CG
T.B.
PANEL GA
EQUIPMENT
EARTHS
PANEL ZK
T.B.
EQUIPMENT
PANEL XZ
T.B.
EQUIPMENT
T.B.
FRAMES 22-23 (LH)
EQUIPMENT
FRAMES 23-24
EARTHS
CABLE
EQUIPMENT
PS2
F22
150A
LINK
422
DH
CG-5 A8
CG-5 A10
S
381
1910
C1
K5L
DG
DA-15 A5
N10R
PE(a)
F39
3A
552
G8L
410
X1
X2
1910
F4
3A
552
G9R
G3R
G10R
TM
4305
POST-MOD 253264A
PRE-MOD 25F850A
4837
POST-MOD 25F850A
FEPSIL 2
*19
J1
No.2 INVERTER
PART OF GROUND SUPPLY CONTACTOR
DG
DA-3 A3
DA-14 A5
BA4
CT1
1578
1580
CD
PE(a)
F40
15A
KP260 ANA
664
411
1447
26
G7R
G2R
No.3 INVERTER
TF
1841
K6L
A1
U
381
422
PS1
F12
150A
LINK
CG-3 A3
CG-3 A1
PE(a)
F38
3A
552
G6R
G1R
G8R
F3
3A
G9L
H
410
TN
4305
POST-MOD 253264A
PRE-MOD 25F850A
4837
POST-MOD 25F850A
*18
FEPSIL 2
No.1 INVERTER
1 DC POWER DISTRIBUTION (N03B)
2 EARTH CHAIN (N03C)
3 AC POWER DISTRIBUTION (N06)
4 COCKPIT LIGHTS (N12A)
5 MASTER WARNING SYSTEM (N51)
6 JET PIPE TEMP (N28)
7 SEE SHEET 1
8 LANDING GEAR INDICATION (N16A)
9 ENGINE START & IGNITION (N04)
10 STALL VANE SENSOR HEATING (N25C)
ART ID # HA00F890488 AA
25-8NA5-305 SH 2
DWG ISS - 5

IDENT	PART NUMBER	1234567 NOMENCLATURE	EFFECT FROM TO	UNITS PER ASSY
		SECONDARY POWER SUPPLIES 1500VA INVERTERS	153154 164167 171173 175276	
	25-8NA5-305	WIRING DIAGRAM- (MOD 253135A) (MOD 25F505A)		RF
BA-ZK	HWBUN1146S10B	.TERMINAL BLOCK- (VK0574)		1
B1-DAD	483TCG11J5-3A	.CIRCUIT BREAKER-3AMP (VU0091)		1
B1-XZ	7MC1-202-10	.CIRCUIT BREAKER-10AMP (VK0142)		1
B19-DAD	483TCG11J5-3A	.CIRCUIT BREAKER-3AMP (VU0091)		1
B2-XZ	7MC1-202-10	.CIRCUIT BREAKER-10AMP (VK0142)		1
B81-DAD	483TCG11J5-3A	.CIRCUIT BREAKER-3AMP (VU0091)		1
B82-DAD	483TCG11J5-3A	.CIRCUIT BREAKER-3AMP (VU0091)		1
B83-DAD	483TCG11J5-3A	.CIRCUIT BREAKER-3AMP (VU0091)		1
CD-ZK	M400-1265	.RELAY- (VK6265) (USED WITH SOCKET: M12883-40-19 (V81349))		1
CG3-P	MTC100YH1-003	.SHELL-PLUG (VK1010) (USED WITH WAFERS: TYPE A, MTC100KT1-1101 DUMMY, MTCX1X100-100)	153154 164167 171173 175254	1
CG3-P	MTC100YH1-003	.SHELL-PLUG (VK1010) (USED WITH INSERT: MTC100YC1-005)	255276	1
CG3-R	MTC100YH1-004	.SHELL-RECEPTACLE (VK1010) (USED WITH WAFERS: TYPE A, MTC100KT1-1103 DUMMY, MTCX1X100-100)	153154 164167 171173 175254	1
CG3-R	MTC100YH1-004	.SHELL-RECEPTACLE (VK1010) (USED WITH INSERT: MTC100YC1-006)	255276	1
		MISSING ITEM NO. NOT APPLICABLE		

– ITEM NOT ILLUSTRATED

IDENT	PART NUMBER	1234567 NOMENCLATURE	EFFECT FROM TO	UNITS PER ASSY
CG5-P	MTC100YH1-003	.SHELL-PLUG (VK1010) (USED WITH WAFERS: TYPE A, MTC100KT1-1101 TYPE B, MTC100KT1-1102)	153154 164167 171173 175254	1
CG5-P	MTC100YH1-003	.SHELL-PLUG (VK1010) (USED WITH INSERT: MTC100YC1-005)	255276	1
CG5-R	MTC100YH1-004	.SHELL-RECEPTACLE (VK1010) (USED WITH WAFERS: TYPE A, MTC100KT1-1103 TYPE B, MTC100KT1-1104)	153154 164167 171173 175254	1
CG5-R	MTC100YH1-004	.SHELL-RECEPTACLE (VK1010) (USED WITH INSERT: MTC100YC1-006)	255276	1
CJ-DAB	M401D4F	.RELAY- (VK6265) (USED WITH SOCKET: M12883-40-20 (V81349))		1
CM-DAB	M301D4F	.RELAY- (VK6265) (USED WITH BASE: S300B1B0)		1
CT-ZK	HWBUN1146S10B	.TERMINAL BLOCK- (VK0574)		1
DA12-P	MTCR161-04P	.CONNECTOR-PIN (VK1010)		1
DA12-R	MTCR101-04S	.CONNECTOR-SOCKET (VK1010)		1
DA14-P	MTC100YH1-003	.SHELL-PLUG (VK1010) (USED WITH WAFERS: TYPE A, MTC100KT1-1101 TYPE B, MTC100KT1-1102)	153154 164167 171173 175254	1
DA14-P	MTC100YH1-003	.SHELL-PLUG (VK1010) (USED WITH INSERT: MTC100YC1-005)	255276	1
DA14-R	MTC100YH1-004	.SHELL-RECEPTACLE (VK1010) (USED WITH WAFERS: TYPE A, MTC100KT1-1103 TYPE B, MTC100KT1-1104)	153154 164167 171173 175254	1

MISSING ITEM NO. NOT APPLICABLE

– ITEM NOT ILLUSTRATED

IDENT	PART NUMBER	1234567 NOMENCLATURE	EFFECT FROM TO	UNITS PER ASSY
DA14-R	MTC100YH1-004	.SHELL-RECEPTACLE (VK1010) (USED WITH INSERT: MTC100YC1-006)	255276	1
DA15-P	MTC100YH1-003	.SHELL-PLUG (VK1010) (USED WITH WAFERS: TYPE A, MTC100KT1-1101 TYPE B, MTC100KT1-1102)	153154 164167 171173 175254	1
DA15-P	MTC100YH1-003	.SHELL-PLUG (VK1010) (USED WITH INSERT: MTC100YC1-005)	255276	1
DA15-R	MTC100YH1-004	.SHELL-RECEPTACLE (VK1010) (USED WITH WAFERS: TYPE A, MTC100KT1-1103 TYPE B, MTC100KT1-1104)	153154 164167 171173 175254	1
DA15-R	MTC100YH1-004	.SHELL-RECEPTACLE (VK1010) (USED WITH INSERT: MTC100YC1-006)	255276	1
DA21-P	MTC100YH2-009	.SHELL-PLUG (VK1010) (USED WITH WAFERS: TYPE A, MTC100KT2-1101 TYPE B, MTC100KT2-1102)	153154 164167 171173 175254	1
DA21-P	MTC100YH2-009	.SHELL-PLUG (VK1010) (USED WITH INSERTS: PRIMARY MTC100YC1-001 SECONDARY MTC100YC1-002)	255276	1
DA21-R	MTC100YH2-010	.SHELL-RECEPTACLE (VK1010) (USED WITH WAFERS: TYPE A, MTC100KT2-1103 TYPE B, MTC100KT2-1104)	153154 164167 171173 175254	1
DA21-R	MTC100YH2-010	.SHELL-RECEPTACLE (VK1010) (USED WITH INSERTS: PRIMARY MTC100YC1-003 SECONDARY MTC100YC1-004)	255276	1
DA3-P	MTC100YH1-003	.SHELL-PLUG (VK1010) (USED WITH WAFERS: TYPE A, MTC100KT1-1101 TYPE B, MTC100KT1-1102)	153154 164167 171173 175254	1

MISSING ITEM NO. NOT APPLICABLE

– ITEM NOT ILLUSTRATED

IDENT	PART NUMBER	1234567 NOMENCLATURE	EFFECT FROM TO	UNITS PER ASSY
DA3-P	MTC100YH1-003	.SHELL-PLUG (VK1010) (USED WITH INSERT: MTC100YC1-005)	255276	1
DA3-R	MTC100YH1-004	.SHELL-RECEPTACLE (VK1010) (USED WITH WAFERS: TYPE A, MTC100KT1-1103 TYPE B, MTC100KT1-1104)	153154 164167 171173 175254	1
DA3-R	MTC100YH1-004	.SHELL-RECEPTACLE (VK1010) (USED WITH INSERT: MTC100YC1-006)	255276	1
DA40-P	MTCR161-04P	.CONNECTOR-PIN (VK1010)		1
DA40-R	MTCR101-04S	.CONNECTOR-SOCKET (VK1010)		1
DA41-P	MTCR161-04P	.CONNECTOR-PIN (VK1010)		1
DA41-R	MTCR101-04S	.CONNECTOR-SOCKET (VK1010)		1
DG	422255-8	.BUNG- (VK1793)		1
DH	422255-9	.BUNG- (VK1793)		1
DJ	422255-7	.BUNG- (VK1793)		1
E-GA	LDG150Y4	.CONTACTOR- (VK4358)		1
E-XZ	CV7313	.DIODE- (VK0004) (USED WITH HOLDER: WBUN1502 (VK0574))		1
EL-DAB	M301D4F	.RELAY- (VK6265) (USED WITH BASE: S300B1B0)		1
EM-DAB	M301D4F	.RELAY- (VK6265) (USED WITH BASE: S300B1B0)		1
F12-GA	L133CA150	.FUSE-150AMP (VU0154)		1
F22-DAC	5920-99-0120073	.FUSE-1AMP (VK0574)		1
F22-GA	L133CA150	.FUSE-150AMP (VU0154)		1
F22-ZK	5920-00-0120075	.FUSE-3AMP (VK0657)		1
		MISSING ITEM NO. NOT APPLICABLE		

- ITEM NOT ILLUSTRATED

IDENT	PART NUMBER	1234567 NOMENCLATURE	EFFECT FROM TO	UNITS PER ASSY
F23-DAC	5920-99-0120073	.FUSE-1AMP (VK0574)		1
F24-DAC	5920-99-0120073	.FUSE-1AMP (VK0574)		1
F3-XZ	5920-99-0120075	.FUSE-3AMP (VK0657)		1
F30-ZK	5920-00-0120075	.FUSE-3AMP (VK0657)		1
F38-ZK	5920-00-0120075	.FUSE-3AMP (VK0657)		1
F39-ZK	5920-00-0120075	.FUSE-3AMP (VK0657)		1
F4-XZ	5920-99-0120075	.FUSE-3AMP (VK0657)		1
F40-ZK	5920-99-0120079	.FUSE-15AMP (VK0657)		1
G-XZ	HWBUN1146D10B	.TERMINAL BLOCK- (VK0574)		1
H-XZ	9274-6205	.RELAY- (VK6265) (USED WITH DIODE ASSY: 25-7NF1815-5A)		1
J-XZ	9274-6205	.RELAY- (VK6265) (USED WITH DIODE ASSY: 25-7NF1815-5A)		1
JT-CG	2132-01-0014	.VOLTMETER- (UNIT EXCHANGE ITEM) (VU1588)		1
K-CG	HWBUN1146D10B	.TERMINAL BLOCK- (VK0574)		1
L-XZ	9330-4026	.RELAY- (VK6265)		1
LT-CG	8A36-01-1-03N	.SWITCH- (V81073)		1
LU-CG	2TP1-70M	.SWITCH- (V91929) (OPT (VK6596))		1
LW-CG	1TP1-31M	.SWITCH- (V91929) (OPT (VK6596))	153154 164167 171173 175276	1
LX-CG	2TP1-70M	.SWITCH- (V91929) (OPT (VK6596))		1
N-CG	HWBUN1146D10B	.TERMINAL BLOCK- (VK0574)		1
S-GA	LDA200B18C	.RELAY- (VK4358)		1
		MISSING ITEM NO. NOT APPLICABLE		

– ITEM NOT ILLUSTRATED

IDENT	PART NUMBER	1234567 NOMENCLATURE	EFFECT FROM TO	UNITS PER ASSY
TF	PC250	.INVERTER-NO.3 STATIC (V07181)		1
TF-P	MS3106R18-9S	.CONNECTOR-SOCKET (V71468) (OPT (VK0316))		1
TM	ASH664-1PB	.INVERTER-MAIN,NO.2 (V07639)	153154 166166 171173 175176	1
TM	ASH664-1PF	.INVERTER-MAIN,NO.2 (V07639)	164165 167167 177276	1
TM-P	MS3108R24-2P	.CONNECTOR-PIN (V71468) (OPT (VK0316))		1
TM-R	MS3126E8-4S	.CONNECTOR-SOCKET (V71468) (OPT (VK0316))		1
TN	ASH664-1PB	.INVERTER-MAIN,NO.1 (V07639)	153154 166166 171173 175176	1
TN	ASH664-1PF	.INVERTER-MAIN,NO.1 (V07639)	164165 167167 177276	1
TN-P	MS3108R24-2P	.CONNECTOR-PIN (V71468) (OPT (VK0316))		1
TN-R	MS3126E8-4S	.CONNECTOR-SOCKET (V71468) (OPT (VK0316))		1
U-GA	LDA200B18C	.RELAY- (VK4358)		1
X8-DAB	MRTB20E04-111	.TERMINAL JUNCTION MODULE- (V14283)		1

MISSING ITEM NO. NOT APPLICABLE

– ITEM NOT ILLUSTRATED

DC GENERATION

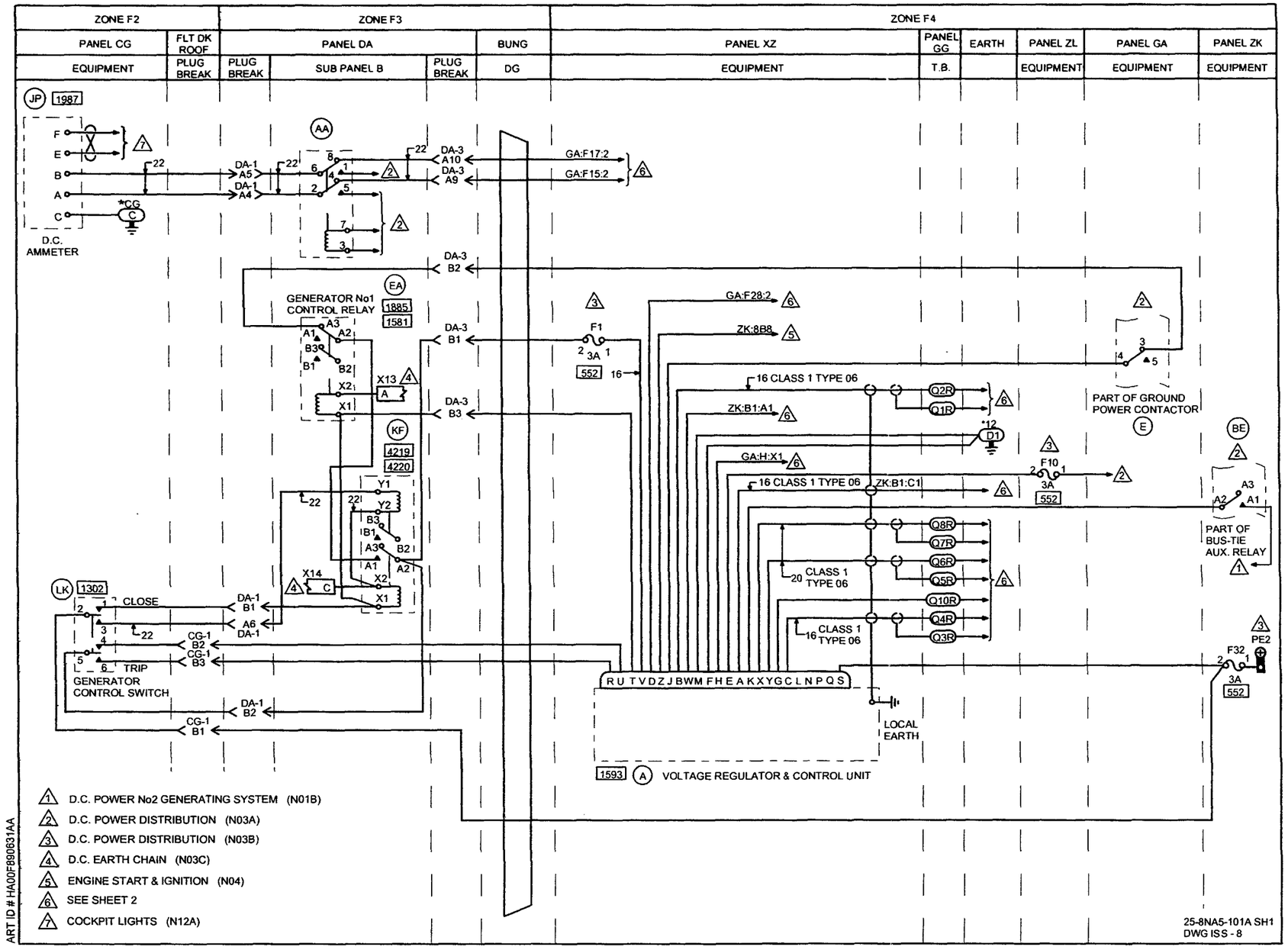
ZONE F2
ZONE F3
ZONE F4
PANEL CG
FLT DK ROOF
PANEL DA
BUNG
PANEL XZ
PANEL GG
EARTH
PANEL ZL
PANEL GA
PANEL ZK
EQUIPMENT
PLUG BREAK
PLUG BREAK
SUB PANEL B
PLUG BREAK
DG
EQUIPMENT
T.B.
EQUIPMENT
EQUIPMENT
EQUIPMENT
JP 1987
D.C. AMMETER
*CG
DA-1 A5
DA-1 A4
DA-3 A10
DA-3 A9
GA:F17:2
GA:F15:2
DA-3 B2
GENERATOR No1 CONTROL RELAY
1885
1581
DA-3 B1
DA-3 B3
X13
KF
4219
4220
X14
LK 1302
CLOSE
TRIP
GENERATOR CONTROL SWITCH
DA-1 B1
A6 DA-1
CG-1 B2
CG-1 B3
DA-1 B2
CG-1 B1
GA:F28:2
ZK:8B8
16 CLASS 1 TYPE 06
ZK:B1:A1
GA:H:X1
ZK:B1:C1
20 CLASS 1 TYPE 06
16 CLASS 1 TYPE 06
F1 3A 552
F10 3A 552
F32 3A 552
PART OF GROUND POWER CONTACTOR
PART OF BUS-TIE AUX. RELAY
PE2
LOCAL EARTH
R U T V D Z J B W M F H E A K X Y G C L N P Q S
1593 VOLTAGE REGULATOR & CONTROL UNIT
1 D.C. POWER No2 GENERATING SYSTEM (N01B)
2 D.C. POWER DISTRIBUTION (N03A)
3 D.C. POWER DISTRIBUTION (N03B)
4 D.C. EARTH CHAIN (N03C)
5 ENGINE START & IGNITION (N04)
6 SEE SHEET 2
7 COCKPIT LIGHTS (N12A)
ART ID # HA00F890631AA
25-8NA5-101A SH1
DWG ISS - 8

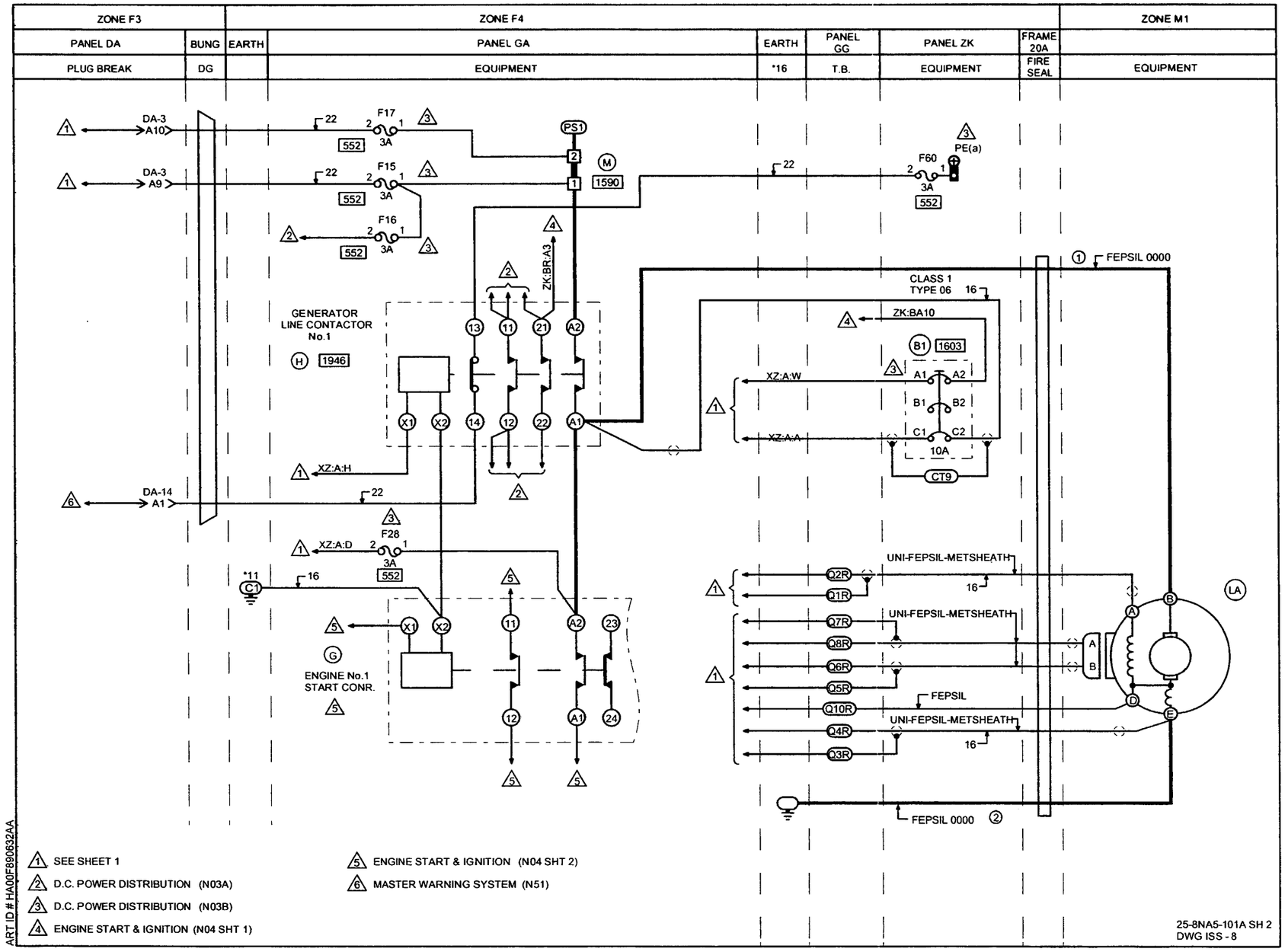
ZONE F3
ZONE F4
ZONE M1
PANEL DA
BUNG
EARTH
PANEL GA
EARTH
PANEL GG
PANEL ZK
FRAME 20A
PLUG BREAK
DG
EQUIPMENT
*16
T.B.
EQUIPMENT
FIRE SEAL
EQUIPMENT
DA-3 A10
DA-3 A9
DA-14 A1
F17
F15
F16
F28
F60
3A
552
PS1
1590
PE(a)
FEPSIL 0000
CLASS 1 TYPE 06
ZK:BA10
ZK:BR:A3
GENERATOR LINE CONTACTOR No.1
1946
1603
XZ:A:W
XZ:A:A
XZ:A:H
XZ:A:D
10A
CT9
UNI-FEPSIL-METSHEATH
FEPSIL
ENGINE No.1 START CONR.
LA
1 SEE SHEET 1
2 D.C. POWER DISTRIBUTION (N03A)
3 D.C. POWER DISTRIBUTION (N03B)
4 ENGINE START & IGNITION (N04 SHT 1)
5 ENGINE START & IGNITION (N04 SHT 2)
6 MASTER WARNING SYSTEM (N51)
ART ID # HA00F890632AA
25-8NA5-101A SH 2
DWG ISS - 8

IDENT	PART NUMBER	1234567 NOMENCLATURE	EFFECT FROM TO	UNITS PER ASSY
		DC POWER NO.1 GENERATING SYSTEM	091276	
	25-8NA5-101A	WIRING DIAGRAM- (MODIFIED BY SB 24-289-253267B) (MOD 253149C) (MOD 25F505A)		RF
A-XZ	51509-006C	.CONTROL UNIT- (UNIT EXCHANGE ITEM) (V09455) (PRE MOD 253159A) (FOR SPARES PROCURE 51539-006H)		1
A-XZ	51539-006H	.CONTROL UNIT-VOLTAGE REGULATOR (UNIT EXCHANGE ITEM) (V09455) (MOD 253159A) (FOR SPARES PROCURE IN LIEU OF 51509-006C)		1
A-XZ-R	MS3126F8-3S	.CONNECTOR-SOCKET (V96906) (USED WITH CLAMP: MS3057-16A)		1
AA-DAB	HD58SF2L03	.RELAY- (VK1793) (USED WITH SOCKET: RSE120074 (V58982))		1
BE-ZK	M300-1264	.RELAY- (VK6265) (USED WITH SOCKET: M12883-41-16 (V81349))		1
B1-ZK	583-96TCK14-10A	.CIRCUIT BREAKER-10AMP (VU0091)		1
CG1-P	MTC100YH2-009	.SHELL-PLUG (VK1010) (USED WITH WAFERS: TYPE A, MTC100KT2-1101 TYPE B, MTC100KT2-1102)	091254	1
CG1-P	MTC100YH2-009	.SHELL-PLUG (VK1010) (USED WITH INSERTS: PRIMARY MTC100YC1-001 SECONDARY MTC100YC1-002)	255276	1

MISSING ITEM NO. NOT APPLICABLE

– ITEM NOT ILLUSTRATED

IDENT	PART NUMBER	1234567 NOMENCLATURE	EFFECT FROM TO	UNITS PER ASSY
CG1-R	MTC100YH2-010	.SHELL-RECEPTACLE (VK1010) (USED WITH WAFERS: TYPE A, MTC100KT2-1103 TYPE B, MTC100KT2-1104)	091254	1
CG1-R	MTC100YH2-010	.SHELL-RECEPTACLE (VK1010) (USED WITH INSERTS: PRIMARY MTC100YC1-003 SECONDARY MTC100YC1-004)	255276	1
CT-ZK	HWBUN1146S10B	.TERMINAL BLOCK- (VK0574)		1
DA1-P	MTC100YH1-003	.SHELL-PLUG (VK1010) (USED WITH WAFERS: TYPE A, MTC100KT1-1101 TYPE B, MTC100KT1-1102)	091254	1
DA1-P	MTC100YH1-003	.SHELL-PLUG (VK1010) (USED WITH INSERT: MTC100YC1-005)	255276	1
DA1-R	MTC100YH1-004	.SHELL-RECEPTACLE (VK1010) (USED WITH WAFERS: TYPE A, MTC100KT1-1103 TYPE B, MTC100KT1-1104)	091254	1
DA1-R	MTC100YH1-004	.SHELL-RECEPTACLE (VK1010) (USED WITH INSERT: MTC100YC1-006)	255276	1
DA14-P	MTC100YH1-003	.SHELL-PLUG (VK1010) (USED WITH WAFERS: TYPE A, MTC100KT1-1101 TYPE B, MTC100KT1-1102)	091254	1
DA14-P	MTC100YH1-003	.SHELL-PLUG (VK1010) (USED WITH INSERT: MTC100YC1-005)	255276	1
DA14-R	MTC100YH1-004	.SHELL-RECEPTACLE (VK1010) (USED WITH WAFERS: TYPE A, MTC100KT1-1103 TYPE B, MTC100KT1-1104)	091254	1
DA14-R	MTC100YH1-004	.SHELL-3ECEPTACLE (VK1010) (USED WITH INSERT: MTC100YC1-006)	255276	1
		MISSING ITEM NO. NOT APPLICABLE		

– ITEM NOT ILLUSTRATED

IDENT	PART NUMBER	1234567 NOMENCLATURE	EFFECT FROM TO	UNITS PER ASSY
DA3-P	MTC100YH1-003	.SHELL-PLUG (VK1010) (USED WITH WAFERS: TYPE A, MTC100KT1-1101 TYPE B, MTC100KT1-1102)	091254	1
DA3-P	MTC100YH1-003	.SHELL-PLUG (VK1010) (USED WITH INSERT: MTC100YC1-005)	255276	1
DA3-R	MTC100YH1-004	.SHELL-RECEPTACLE (VK1010) (USED WITH WAFERS: TYPE A, MTC100KT1-1103 TYPE B, MTC100KT1-1104)	091254	1
DA3-R	MTC100YH1-004	.SHELL-RECEPTACLE (VK1010) (USED WITH INSERT: MTC100YC1-006)	255276	1
DG	422255-8	.BUNG- (VK1793)		1
E-GA	LDG150Y4	.CONTACTOR-GROUND POWER (VK4358)		1
EA-DAB	M300-1264	.RELAY- (VK6265) (USED WITH SOCKET: M12883-41-16 (V81349))		1
F1-XZ	5920-99-0120075	.FUSE-3AMP (VK0657)		1
F10-ZL	5920-99-0120075	.FUSE-3AMP (VK0657)		1
F15-GA	5920-99-0120075	.FUSE-3AMP (VK0657)		1
F16-GA	5920-99-0120075	.FUSE-3AMP (VK0657)		1
F17-GA	5920-99-0120075	.FUSE-3AMP (VK0657)		1
F28-GA	5920-99-0120075	.FUSE-3AMP (VK0657)		1
F32-ZK	5920-99-0120075	.FUSE-3AMP (VK0657)		1
F60-ZK	5920-99-0120075	.FUSE-3AMP (VK0657)		1
G-GA	A703FSS	.CONTACTOR-ENGINE NO.1 START (V74063)		1
H-GA	A703ZS	.CONTACTOR-LINE GENERATOR NO.1 (V74063)		1
		MISSING ITEM NO. NOT APPLICABLE		

– ITEM NOT ILLUSTRATED

	IDENT	PART NUMBER	1234567 NOMENCLATURE	EFFECT FROM TO	UNITS PER ASSY
	JP-CG	2132-01-0013	.INDICATOR-DC AMMETER (UNIT EXCHANGE ITEM) (VU1588)		1
	KF-DAB	M302D4L	.RELAY- (VK6265) (USED WITH BASE: S302D1B0)		1
R R R R R	LA	23080-005	.MOTOR-STARTER/GENERATOR (UNIT EXCHANGE ITEM) (V31435) (OPT 140-380026-1) (POST SB24-316-7671C)		1
R R R	LA	140-380026-1	.MOTOR-STARTER/GENERATOR (OPT 23080-005)		1
	LA-R	MS3126F8-3S	.CONNECTOR-SOCKET (V96906)		1
	LK-CG	2TP1-7	.SWITCH-GENERATOR CONTROL (V91929) (OPT (VK6596))	091116	1
	LK-CG	2TP1-7M	.SWITCH-GENERATOR CONTROL (V91929) (OPT (VK6596))	117276	1
	M-GA	25-8NF275-1A	.SHUNT ASSY- (COMPRISING OF: SHUNT 1626 (VK4383))		1
	Q-GG	HWBUN1146D10B	.TERMINAL BLOCK- (VK0574)		1
	X13-DAB	MRTB20E04-111	.TERMINAL JUNCTION MODULE- (V14283)		1
	X14-DAB	MRTB20E04-111	.TERMINAL JUNCTION MODULE- (V14283)		1
			MISSING ITEM NO. NOT APPLICABLE		

– ITEM NOT ILLUSTRATED

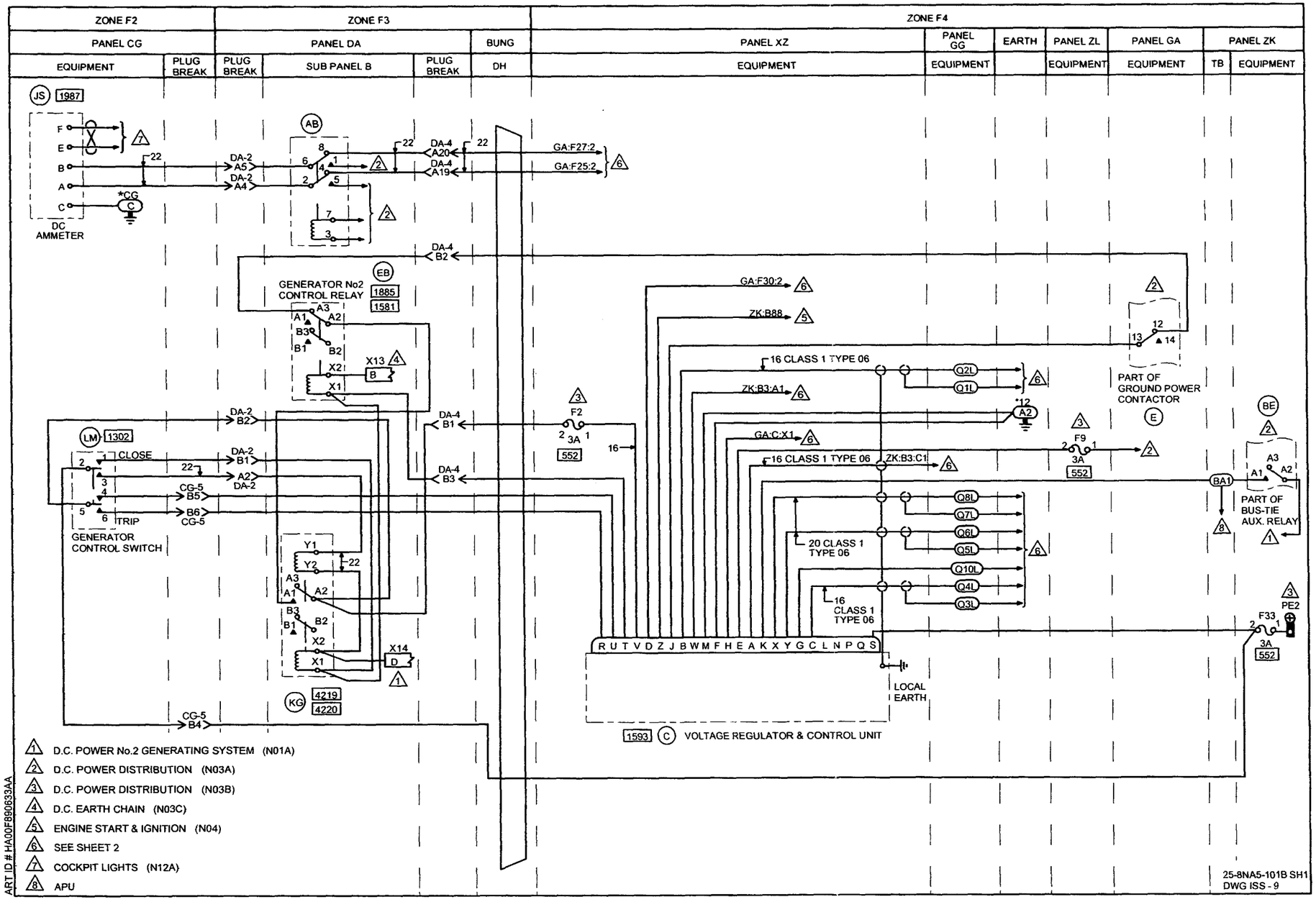
ZONE F2
ZONE F3
ZONE F4
PANEL CG
PANEL DA
BUNG
PANEL XZ
PANEL GG
EARTH
PANEL ZL
PANEL GA
PANEL ZK
EQUIPMENT
PLUG BREAK
SUB PANEL B
DH
TB
JS 1987
DC AMMETER
GENERATOR No2 CONTROL RELAY
1885
1581
LM 1302
GENERATOR CONTROL SWITCH
CLOSE
TRIP
KG 4219 4220
1593 C VOLTAGE REGULATOR & CONTROL UNIT
LOCAL EARTH
PART OF GROUND POWER CONTACTOR
PART OF BUS-TIE AUX. RELAY
16 CLASS 1 TYPE 06
20 CLASS 1 TYPE 06
1 D.C. POWER No.2 GENERATING SYSTEM (N01A)
2 D.C. POWER DISTRIBUTION (N03A)
3 D.C. POWER DISTRIBUTION (N03B)
4 D.C. EARTH CHAIN (N03C)
5 ENGINE START & IGNITION (N04)
6 SEE SHEET 2
7 COCKPIT LIGHTS (N12A)
8 APU
ART ID # HA00F890633AA
25-8NA5-101B SH1
DWG ISS - 9

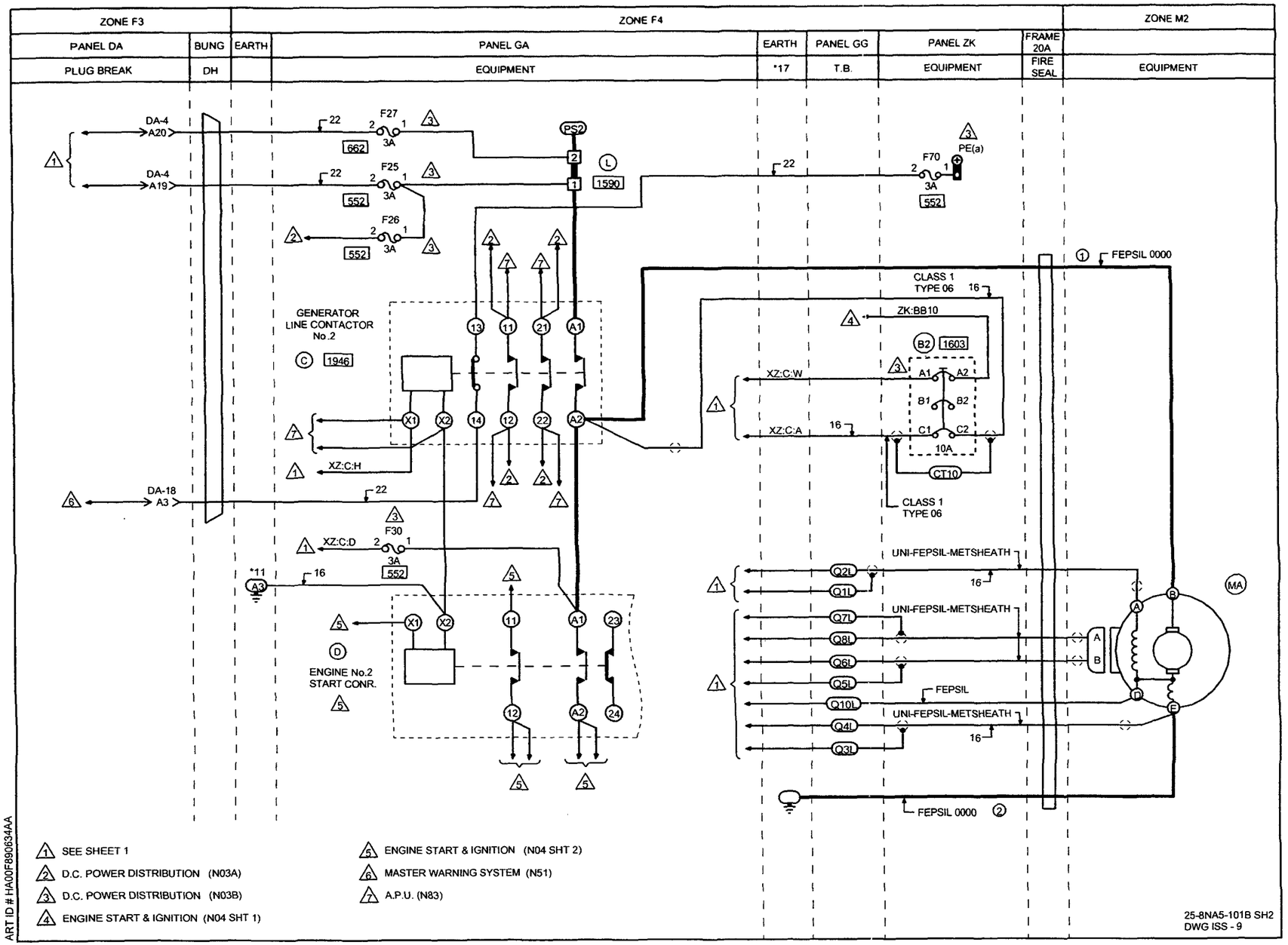
ZONE F3
ZONE F4
ZONE M2
PANEL DA
BUNG
EARTH
PANEL GA
EARTH
PANEL GG
PANEL ZK
FRAME 20A
PLUG BREAK
DH
EQUIPMENT
*17
T.B.
EQUIPMENT
FIRE SEAL
EQUIPMENT
DA-4 A20
DA-4 A19
DA-18 A3
F27
F25
F26
F30
F70
3A
552
662
1590
PS2
PE(a)
GENERATOR LINE CONTACTOR No.2
1946
ENGINE No.2 START CONR.
XZ:C:H
XZ:C:D
XZ:C:W
XZ:C:A
ZK:BB10
1603
CT10
10A
CLASS 1 TYPE 06
FEPSIL 0000
UNI-FEPSIL-METSHEATH
FEPSIL
MA
SEE SHEET 1
D.C. POWER DISTRIBUTION (N03A)
D.C. POWER DISTRIBUTION (N03B)
ENGINE START & IGNITION (N04 SHT 1)
ENGINE START & IGNITION (N04 SHT 2)
MASTER WARNING SYSTEM (N51)
A.P.U. (N83)
25-8NA5-101B SH2
DWG ISS - 9
ART ID # HA00F890634AA

IDENT	PART NUMBER	1234567 NOMENCLATURE	EFFECT FROM TO	UNITS PER ASSY
		DC POWER NO.2 GENERATING SYSTEM	092093 095096 098105 107108 111111 113114 117117 119119 121129 132132 135142 144145 147147 150163 166166 168176 178179 181181 183183 185185 187189 191191 193193 195196 199207 209209 214218 220221 223223 225225 229232 234234 236236 238257 259276	
	25-8NA5-101B	WIRING DIAGRAM- (MODIFIED BY SB24-289-253267) (MOD 253149C) (MOD 25F505A)		RF
AB-DAB	HDS8SF2L03	.RELAY-2 POLE (VK1793) (USED WITH SOCKET: RSE120074 (V58982))		1
BA-ZK	HWBUN1146S10B	.TERMINAL BLOCK- (VK0574)		1
		MISSING ITEM NO. NOT APPLICABLE		

– ITEM NOT ILLUSTRATED

IDENT	PART NUMBER	1234567 NOMENCLATURE	EFFECT FROM TO	UNITS PER ASSY
BE-ZK	M300-1264	.RELAY- (VK6265) (USED WITH SOCKET: M12883-41-16 (V81349))		1
B2-ZK	583-96TCK14-10A	.CIRCUIT BREAKER-10AMP (VU0091)		1
C-GA	A703ZS	.CONTACTOR-NO.2 GENERATOR LINE (V74063)		1
C-XZ	51509-006C	.CONTROL UNIT- (UNIT EXCHANGE ITEM) (V09455) (PRE MOD 253159A) (FOR SPARES PROCURE 51539-006H)		1
C-XZ	51539-006H	.CONTROL UNIT- (UNIT EXCHANGE ITEM) (V09455) (MOD 253159A) (FOR SPARES PROCURE IN LIEU OF 51509-006C)		1
		MISSING ITEM NO. NOT APPLICABLE		

– ITEM NOT ILLUSTRATED

IDENT	PART NUMBER	1234567 NOMENCLATURE	EFFECT FROM TO	UNITS PER ASSY
CG5-P	MTC100YH1-003	.SHELL-PLUG (VK1010) (USED WITH WAFERS: TYPE A, MTC100KT1-1101 TYPE B, MTC100KT1-1102)	092093 095096 098105 107108 111111 113114 117117 119119 121129 132132 135142 144145 147147 150163 166166 168176 178179 181181 183183 185185 187189 191191 193193 195196 199207 209209 214218 220221 223223 225225 229232 234234 236236 238254	1
CG5-P	MTC100YH1-003	.SHELL-PLUG (VK1010) (USED WITH INSERT: MTC100YC1-005)	255257 259276	1
		MISSING ITEM NO. NOT APPLICABLE		

– ITEM NOT ILLUSTRATED

IDENT	PART NUMBER	1234567 NOMENCLATURE	EFFECT FROM TO	UNITS PER ASSY
CG5-R	MTC100YH1-004	.SHELL-RECEPTACLE (VK1010) (USED WITH WAFERS: TYPE A, MTC100KT1-1103 TYPE B, MTC100KT1-1104)	092093 095096 098105 107108 111111 113114 117117 119119 121129 132132 135142 144145 147147 150163 166166 168176 178179 181181 183183 185185 187189 191191 193193 195196 199207 209209 214218 220221 223223 225225 229232 234234 236236 238254	1
CG5-R	MTC100YH1-004	.SHELL-RECEPTACLE (VK1010) (USED WITH INSERT: MTC100YC1-006)	255257 259276	1
CT-ZK	HWBUN1146S10B	.TERMINAL BLOCK- (VK0574)		1
D-GA	A703FSS	.CONTACTOR-ENGINE NO.2 START (V74063)		1

MISSING ITEM NO. NOT APPLICABLE

– ITEM NOT ILLUSTRATED

IDENT	PART NUMBER	1234567 NOMENCLATURE	EFFECT FROM TO	UNITS PER ASSY
DA18-P	MTC100YH1-003	.SHELL-PLUG (VK1010) (USED WITH WAFERS: TYPE A, MTC100KT1-1101 DUMMY, MTCX1X100-100)	092093 095096 098105 107108 111111 113114 117117 119119 121129 132132 135142 144145 147147 150163 166166 168176 178179 181181 183183 185185 187189 191191 193193 195196 199207 209209 214218 220221 223223 225225 229232 234234 236236 238254	1
DA18-P	MTC100YH1-003	.SHELL-PLUG (VK1010) (USED WITH INSERT: MTC100YC1-005)	255257 259276	1
		MISSING ITEM NO. NOT APPLICABLE		

– ITEM NOT ILLUSTRATED

IDENT	PART NUMBER	1234567 NOMENCLATURE	EFFECT FROM TO	UNITS PER ASSY
DA18-R	MTC100YH1-004	.SHELL-RECEPTACLE (VK1010) (USED WITH WAFERS: TYPE A, MTC100KT1-1103 DUMMY, MTCX1X100-100)	092093 095096 098105 107108 111111 113114 117117 119119 121129 132132 135142 144145 147147 150163 166166 168176 178179 181181 183183 185185 187189 191191 193193 195196 199207 209209 214218 220221 223223 225225 229232 234234 236236 238254	1
DA18-R	MTC100YH1-004	.SHELL-RECEPTACLE (VK1010) (USED WITH INSERT: MTC100YC1-006)	255257 259276	1
		MISSING ITEM NO. NOT APPLICABLE		

– ITEM NOT ILLUSTRATED

IDENT	PART NUMBER	1234567 NOMENCLATURE	EFFECT FROM TO	UNITS PER ASSY
DA2-P	MTC100YH1-003	.SHELL-PLUG (VK1010) (USED WITH WAFERS: TYPE A, MTC100KT1-1101 TYPE B, MTC100KT1-1102)	092093 095096 098105 107108 111111 113114 117117 119119 121129 132132 135142 144145 147147 150163 166166 168176 178179 181181 183183 185185 187189 191191 193193 195196 199207 209209 214218 220221 223223 225225 229232 234234 236236 238254	1
DA2-P	MTC100YH1-003	.SHELL-PLUG (VK1010) (USED WITH INSERT: MTC100YC1-005)	255257 259276	1
		MISSING ITEM NO. NOT APPLICABLE		

— ITEM NOT ILLUSTRATED

IDENT	PART NUMBER	1234567 NOMENCLATURE	EFFECT FROM TO	UNITS PER ASSY
DA2-R	MTC100YH1-004	.SHELL-RECEPTACLE (VK1010) (USED WITH WAFERS: TYPE A, MTC100KT1-1103 TYPE B, MTC100KT1-1104)	092093 095096 098105 107108 111111 113114 117117 119119 121129 132132 135142 144145 147147 150163 166166 168176 178179 181181 183183 185185 187189 191191 193193 195196 199207 209209 214218 220221 223223 225225 229232 234234 236236 238254	1
DA2-R	MTC100YH1-004	.SHELL-RECEPTACLE (VK1010) (USED WITH INSERT: MTC100YC1-006)	255257 259276	1
		MISSING ITEM NO. NOT APPLICABLE		

– ITEM NOT ILLUSTRATED

IDENT	PART NUMBER	1234567 NOMENCLATURE	EFFECT FROM TO	UNITS PER ASSY
DA4-P	MTC100YH2-009	.SHELL-PLUG (VK1010) (USED WITH WAFERS: TYPE A, MTC100KT2-1101 TYPE B, MTC100KT2-1102)	092093 095096 098105 107108 111111 113114 117117 119119 121129 132132 135142 144145 147147 150163 166166 168176 178179 181181 183183 185185 187189 191191 193193 195196 199207 209209 214218 220221 223223 225225 229232 234234 236236 238254	1
DA4-P	MTC100YH2-009	.SHELL-PLUG (VK1010) (USED WITH INSERTS: PRIMARY MTC100YC1-001 SECONDARY MTC100YC1-002)	255257 259276	1
		MISSING ITEM NO. NOT APPLICABLE		

– ITEM NOT ILLUSTRATED

IDENT	PART NUMBER	1234567 NOMENCLATURE	EFFECT FROM TO	UNITS PER ASSY
DA4-R	MTC100YH2-010	.SHELL-RECEPTACLE (VK1010) (USED WITH WAFERS: TYPE A, MTC100KT2-1103 TYPE B, MTC100KT2-1104)	092093 095096 098105 107108 111111 113114 117117 119119 121129 132132 135142 144145 147147 150163 166166 168176 178179 181181 183183 185185 187189 191191 193193 195196 199207 209209 214218 220221 223223 225225 229232 234234 236236 238254	1
DA4-R	MTC100YH2-010	.SHELL-RECEPTACLE (VK1010) (USED WITH INSERTS: PRIMARY MTC100YC1-003 SECONDARY MTC100YC1-004)	255257 259276	1
DH	422254-9	.BUNG- (VK1793)		1
E-GA	LDG150Y4	.CONTACTOR-GROUND POWER (VK4358)		1
EB-DAB	M300-1264	.RELAY- (VK1793) (USED WITH BASE: S300-1AB0)		1
F2-XZ	5920-99-0120075	.FUSE-3AMP (VK0657)		1
		MISSING ITEM NO. NOT APPLICABLE		

– ITEM NOT ILLUSTRATED

	IDENT	PART NUMBER	1234567 NOMENCLATURE	EFFECT FROM TO	UNITS PER ASSY
	F25-GA	5920-99-0120075	.FUSE-3AMP (VK0657)		1
	F26-GA	5920-99-0120075	.FUSE-3AMP (VK0657)		1
	F27-GA	5920-99-0120075	.FUSE-3AMP (VK0657)		1
	F30-GA	5920-99-0120075	.FUSE-3AMP (VK0657)		1
	F33-ZK	5920-99-0120075	.FUSE-3AMP (VK0657)		1
	F70-ZK	5920-99-0120075	.FUSE-3AMP (VK0657)		1
	F9-ZL	5920-99-0120075	.FUSE-3AMP (VK0657)		1
	JS-CG	2132-01-0013	.INDICATOR-DC AMMETER (UNIT EXCHANGE ITEM) (VU1588)		1
	KG-DAB	M302D4L	.RELAY- (VK6265) (USED WITH BASE: S302D1B3)		1
	L-GA	25-8NF4891-1	.SHUNT ASSY- (COMPRISING OF: SHUNT 1626 (VK4383))		1
	LM-CG	2TP1-7	.SWITCH-GENERATOR CONTROL (VK6596)		1
R R R R R	MA	23080-005	.MOTOR-STARTER/GENERATOR (UNIT EXCHANGE ITEM) (V31435) (OPT 140-380026-1) (SB24-316-7671C)		1
R R	MA	140-380026-1	.MOTOR-STARTER/GENERATOR (OPT 23080-005)		1
	Q-GG	HWBUN1146D10B	.TERMINAL BLOCK- (VK0574)		1
	X13-DAB	MRTB20E04-111	.TERMINAL JUNCTION MODULE- (V14283)		1
	X14-DAB	MRTB20E04-111	.TERMINAL JUNCTION MODULE- (V14283)		1

MISSING ITEM NO. NOT APPLICABLE

– ITEM NOT ILLUSTRATED

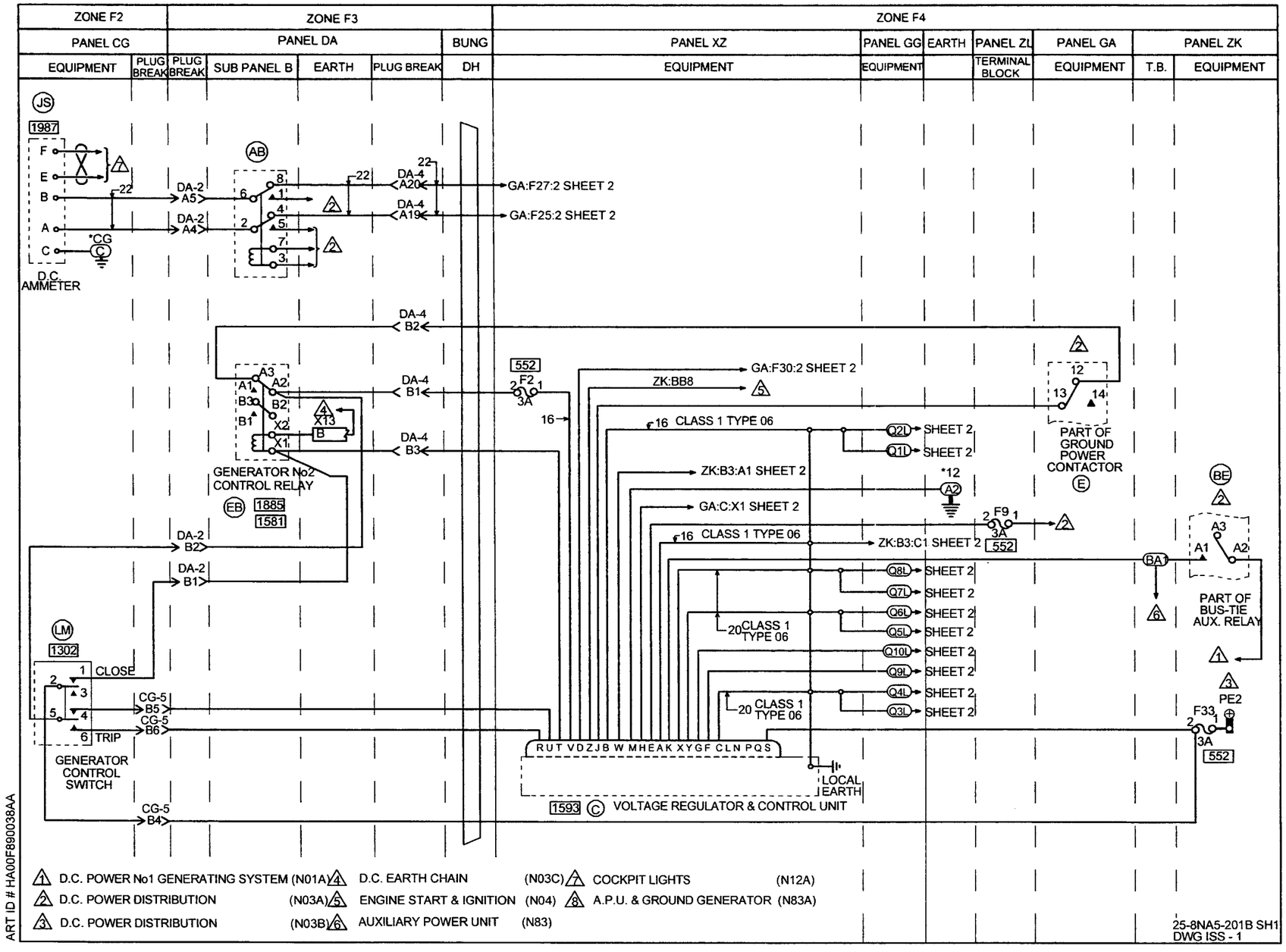
ZONE F2
ZONE F3
ZONE F4
PANEL CG
PANEL DA
BUNG
PANEL XZ
PANEL GG
EARTH
PANEL ZL
PANEL GA
PANEL ZK
EQUIPMENT
PLUG BREAK
SUB PANEL B
DH
TERMINAL BLOCK
T.B.
D.C. AMMETER
GENERATOR No2 CONTROL RELAY
GENERATOR CONTROL SWITCH
CLOSE
TRIP
GA:F27:2 SHEET 2
GA:F25:2 SHEET 2
GA:F30:2 SHEET 2
ZK:BB8
CLASS 1 TYPE 06
ZK:B3:A1 SHEET 2
GA:C:X1 SHEET 2
ZK:B3:C1 SHEET 2
SHEET 2
PART OF GROUND POWER CONTACTOR
PART OF BUS-TIE AUX. RELAY
LOCAL EARTH
VOLTAGE REGULATOR & CONTROL UNIT
1 D.C. POWER No1 GENERATING SYSTEM (N01A)
2 D.C. POWER DISTRIBUTION (N03A)
3 D.C. POWER DISTRIBUTION (N03B)
4 D.C. EARTH CHAIN (N03C)
5 ENGINE START & IGNITION (N04)
6 AUXILIARY POWER UNIT (N83)
7 COCKPIT LIGHTS (N12A)
8 A.P.U. & GROUND GENERATOR (N83A)
25-8NA5-201B SH1
DWG ISS - 1
ART ID # HA00F890038AA

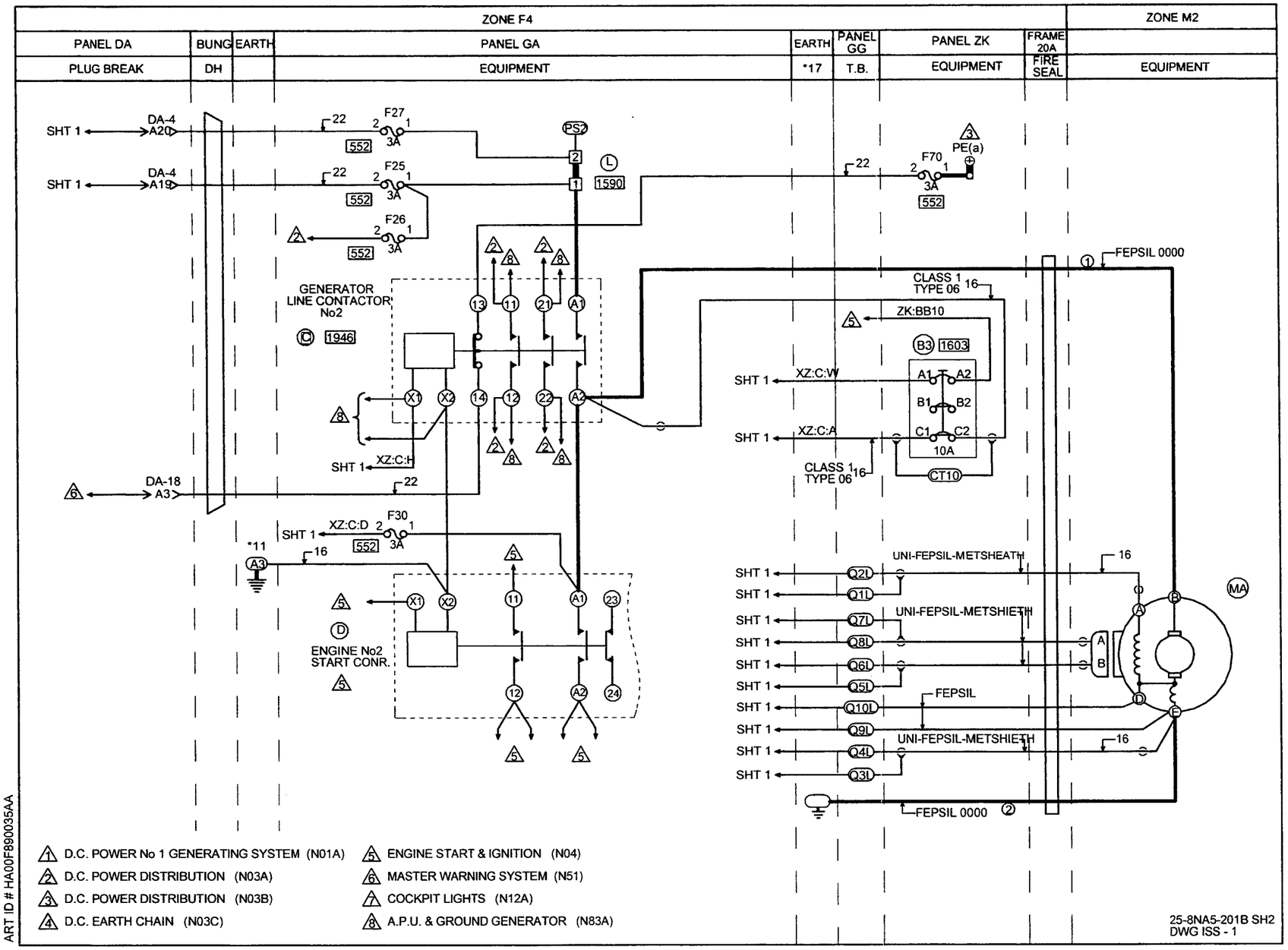

ART ID # HA00F890035AA

IDENT	PART NUMBER	1234567 NOMENCLATURE	EFFECT FROM TO	UNITS PER ASSY
		DC POWER NO.2 GENERATING SYSTEM	091091 094094 097097 106106 109110 112112 115116 118118 120120 130131 133134 143143 146146 148149 164165 167167 177177 180180 182182 184184 186186 190190 192192 194194 197198 208208 210212 219219 222222 224224 226228 233233 235235 237237 258258	
	25-8NA5-201B	WIRING DIAGRAM- (MODIFIED BY SB24-289-253267) (MOD 259404B)		RF
AB-DAB	HDS8SF2L03	.RELAY-2 POLE (VK1793) (USED WITH SOCKET: RSE120074 (V58982))		1
BA-ZK	HWBUN1146S10B	.TERMINAL BLOCK- (VK0574)		1
		MISSING ITEM NO. NOT APPLICABLE		

– ITEM NOT ILLUSTRATED

IDENT	PART NUMBER	1234567 NOMENCLATURE	EFFECT FROM TO	UNITS PER ASSY
BE-ZK	M300-1264	.RELAY- (VK6265) (USED WITH SOCKET: M12883-41-16 (V81349))		1
B3-ZK	583-96TCK14-10A	.CIRCUIT BREAKER-10AMP (VU0091)		1
C-GA	A703ZS	.CONTACTOR-NO.2 GENERATOR LINE (V74063)		1
C-XZ	51509-006C	.CONTROL UNIT- (UNIT EXCHANGE ITEM) (V09455) (PRE MOD 253159A) (FOR SPARES PROCURE 51539-006H)		1
C-XZ	51539-006H	.CONTROL UNIT- (UNIT EXCHANGE ITEM) (V09455) (MOD 253159A) (FOR SPARES PROCURE IN LIEU OF 51509-006C)		1
		MISSING ITEM NO. NOT APPLICABLE		

– ITEM NOT ILLUSTRATED

IDENT	PART NUMBER	1234567 NOMENCLATURE	EFFECT FROM TO	UNITS PER ASSY
CG5-P	MTC100YH1-003	.SHELL-PLUG (VK1010) (USED WITH WAFERS: TYPE A, MTC100KT1-1101 TYPE B, MTC100KT1-1102)	091091 094094 097097 106106 109110 112112 115116 118118 120120 130131 133134 143143 146146 148149 164165 167167 177177 180180 182182 184184 186186 190190 192192 194194 197198 208208 210212 219219 222222 224224 226228 233233 235235 237237	1
CG5-P	MTC100YH1-003	.SHELL-PLUG (VK1010) (USED WITH INSERT: MTC100YC1-005)	258258	1
		MISSING ITEM NO. NOT APPLICABLE		

– ITEM NOT ILLUSTRATED

IDENT	PART NUMBER	1234567 NOMENCLATURE	EFFECT FROM TO	UNITS PER ASSY
CG5-R	MTC100YH1-004	.SHELL-RECEPTACLE (VK1010) (USED WITH WAFERS: TYPE A, MTC100KT1-1103 TYPE B, MTC100KT1-1104)	091091 094094 097097 106106 109110 112112 115116 118118 120120 130131 133134 143143 146146 148149 164165 167167 177177 180180 182182 184184 186186 190190 192192 194194 197198 208208 210212 219219 222222 224224 226228 233233 235235 237237	1
CG5-R	MTC100YH1-004	.SHELL-RECEPTACLE (VK1010) (USED WITH INSERT: MTC100YC1-006)	258258	1
CT-ZK	HWBUN1146S10B	.TERMINAL BLOCK- (VK0574)		1
D-GA	A703FSS	.CONTACTOR-ENGINE NO2,START (V74063)		1
		MISSING ITEM NO. NOT APPLICABLE		

– ITEM NOT ILLUSTRATED

IDENT	PART NUMBER	1234567 NOMENCLATURE	EFFECT FROM TO	UNITS PER ASSY
DA18-P	MTC100YH1-003	.SHELL-PLUG (VK1010) (USED WITH WAFERS: TYPE A, MTC100KT1-1101 DUMMY, MTCX1X100-100)	091091 094094 097097 106106 109110 112112 115116 118118 120120 130131 133134 143143 146146 148149 164165 167167 177177 180180 182182 184184 186186 190190 192192 194194 197198 208208 210212 219219 222222 224224 226228 233233 235235 237237	1
DA18-P	MTC100YH1-003	.SHELL-PLUG (VK1010) (USED WITH INSERT: MTC100YC1-005)	258258	1
		MISSING ITEM NO. NOT APPLICABLE		

– ITEM NOT ILLUSTRATED

IDENT	PART NUMBER	1234567 NOMENCLATURE	EFFECT FROM TO	UNITS PER ASSY
DA18-R	MTC100YH1-004	.SHELL-RECEPTACLE (VK1010) (USED WITH WAFERS: TYPE A, MTC100KT1-1103 DUMMY, MTCX1X100-100)	091091 094094 097097 106106 109110 112112 115116 118118 120120 130131 133134 143143 146146 148149 164165 167167 177177 180180 182182 184184 186186 190190 192192 194194 197198 208208 210212 219219 222222 224224 226228 233233 235235 237237	1
DA18-R	MTC100YH1-004	.SHELL-RECEPTACLE (VK1010) (USED WITH INSERT: MTC100YC1-006)	258258	1
		MISSING ITEM NO. NOT APPLICABLE		

– ITEM NOT ILLUSTRATED

IDENT	PART NUMBER	1234567 NOMENCLATURE	EFFECT FROM TO	UNITS PER ASSY
DA2-P	MTC100YH1-003	.SHELL-PLUG (VK1010) (USED WITH WAFERS: TYPE A, MTC100KT1-1101 TYPE B, MTC100KT1-1102)	091091 094094 097097 106106 109110 112112 115116 118118 120120 130131 133134 143143 146146 148149 164165 167167 177177 180180 182182 184184 186186 190190 192192 194194 197198 208208 210212 219219 222222 224224 226228 233233 235235 237237	1
DA2-P	MTC100YH1-003	.SHELL-PLUG (VK1010) (USED WITH INSERT: MTC100YC1-005)	258258	1
		MISSING ITEM NO. NOT APPLICABLE		

— ITEM NOT ILLUSTRATED

IDENT	PART NUMBER	1234567 NOMENCLATURE	EFFECT FROM TO	UNITS PER ASSY
DA2-R	MTC100YH1-004	.SHELL-RECEPTACLE (VK1010) (USED WITH WAFERS: TYPE A, MTC100KT1-1103 TYPE B, MTC100KT1-1104)	091091 094094 097097 106106 109110 112112 115116 118118 120120 130131 133134 143143 146146 148149 164165 167167 177177 180180 182182 184184 186186 190190 192192 194194 197198 208208 210212 219219 222222 224224 226228 233233 235235 237237	1
DA2-R	MTC100YH1-004	.SHELL-RECEPTACLE (VK1010) (USED WITH INSERT: MTC100YC1-006)	258258	1
		MISSING ITEM NO. NOT APPLICABLE		

– ITEM NOT ILLUSTRATED

IDENT	PART NUMBER	1234567 NOMENCLATURE	EFFECT FROM TO	UNITS PER ASSY
DA4-P	MTC100YH2-009	.SHELL-PLUG (VK1010) (USED WITH WAFERS: TYPE A, MTC100KT2-1101 TYPE B, MTC100KT2-1102)	091091 094094 097097 106106 109110 112112 115116 118118 120120 130131 133134 143143 146146 148149 164165 167167 177177 180180 182182 184184 186186 190190 192192 194194 197198 208208 210212 219219 222222 224224 226228 233233 235235 237237	1
DA4-P	MTC100YH2-009	.SHELL-PLUG (VK1010) (USED WITH INSERTS: PRIMARY MTC100YC1-001 SECONDARY MTC100YC1-002)	258258	1
		MISSING ITEM NO. NOT APPLICABLE		

– ITEM NOT ILLUSTRATED

IDENT	PART NUMBER	1234567 NOMENCLATURE	EFFECT FROM TO	UNITS PER ASSY
DA4-R	MTC100YH2-010	.SHELL-RECEPTACLE (VK1010) (USED WITH WAFERS: TYPE A, MTC100KT2-1103 TYPE B, MTC100KT2-1104)	091091 094094 097097 106106 109110 112112 115116 118118 120120 130131 133134 143143 146146 148149 164165 167167 177177 180180 182182 184184 186186 190190 192192 194194 197198 208208 210212 219219 222222 224224 226228 233233 235235 237237	1
DA4-R	MTC100YH2-010	.SHELL-RECEPTACLE (VK1010) (USED WITH INSERTS: PRIMARY MTC100YC1-003 SECONDARY MTC100YC1-004)	258258	1
DH	422254-9	.BUNG- (VK1793)		1
E-GA	LDG150Y4	.CONTACTOR-GROUND POWER (VK4358)		1
EB-DAB	M300-1264	.RELAY- (VK1793) (USED WITH BASE: S300-1AB0)		1
F2-XZ	5920-99-0120075	.FUSE-3AMP (VK0657)		1
		MISSING ITEM NO. NOT APPLICABLE		

– ITEM NOT ILLUSTRATED

	IDENT	PART NUMBER	1234567 NOMENCLATURE	EFFECT FROM TO	UNITS PER ASSY
	F25-GA	5920-99-0120075	.FUSE-3AMP (VK0657)		1
	F26-GA	5920-99-0120075	.FUSE-3AMP (VK0657)		1
	F27-GA	5920-99-0120075	.FUSE-3AMP (VK0657)		1
	F30-GA	5920-99-0120075	.FUSE-3AMP (VK0657)		1
	F33-ZK	5920-99-0120075	.FUSE-3AMP (VK0657)		1
	F70-ZK	5920-99-0120075	.FUSE-3AMP (VK0657)		1
	F9-ZL	5920-99-0120075	.FUSE-3AMP (VK0657)		1
	JS-CG	2132-01-0013	.INDICATOR-DC AMMETER (UNIT EXCHANGE ITEM) (VU1588)		1
	L-GA	25-8NF4891-1	.SHUNT ASSY- (COMPRISING OF: SHUNT 1626 (VK4383))		1
	LM-CG	2TP1-7	.SWITCH-GENERATOR CONTROL (VK6596)		1
R R R R R	MA	23080-005	.MOTOR-STARTER/GENERATOR (UNIT EXCHANGE ITEM) (V31435) (OPT 140-380026-1) (POST SB24-316)		1
R R	MA	140-380026-1	.MOTOR-STARTER/GENERATOR (OPT 23080-005)		1
	Q-GG	HWBUN1146D10B	.TERMINAL BLOCK- (VK0574)		1
	X13-DAB	MRTB20E04-111	.TERMINAL JUNCTION MODULE- (V14283)		1

MISSING ITEM NO. NOT APPLICABLE

– ITEM NOT ILLUSTRATED

ELECTRICAL LOAD DISTRIBUTION

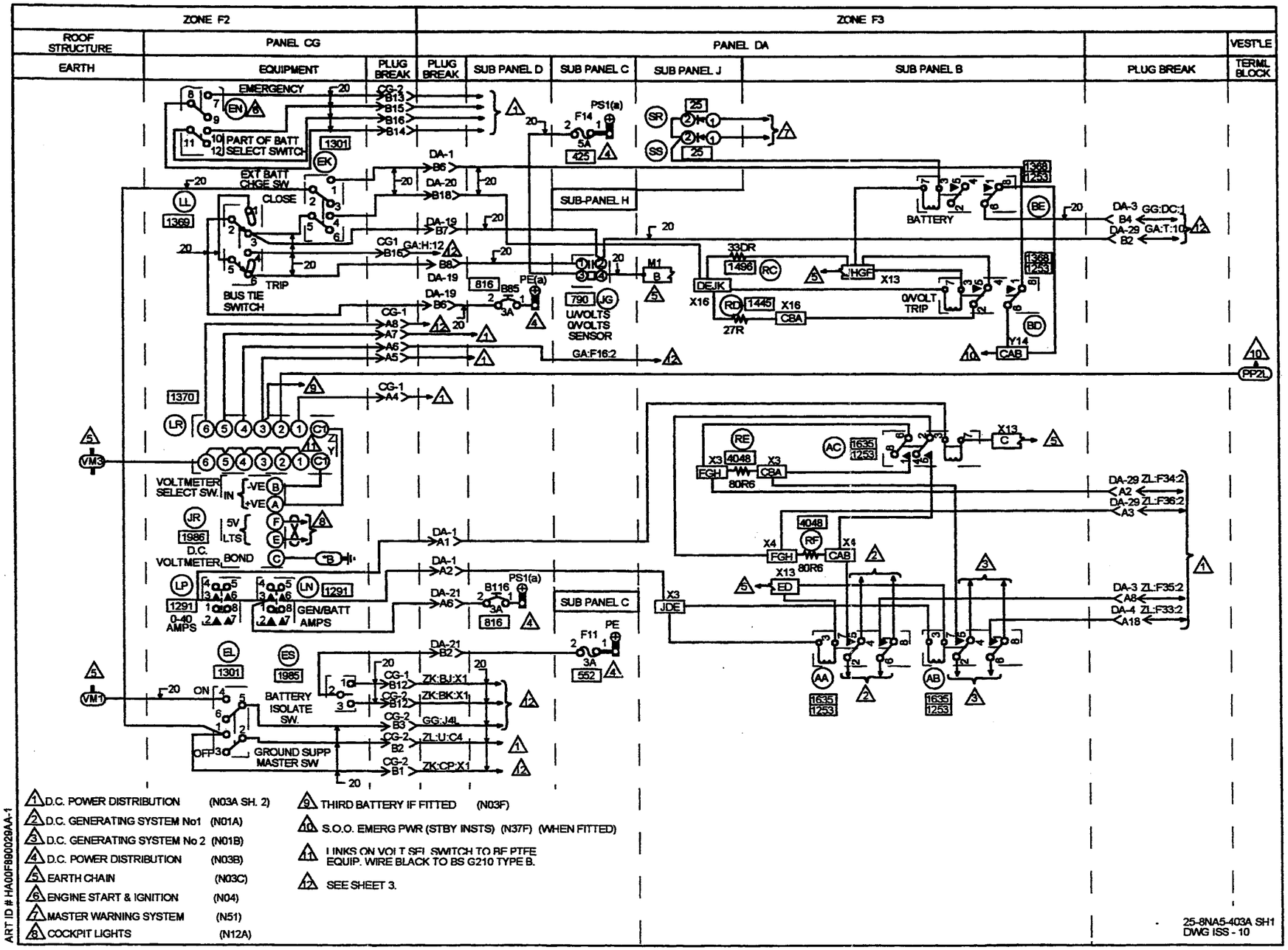
ZONE F2
ZONE F3
ROOF STRUCTURE
PANEL CG
PANEL DA
VEST'LE
EARTH
EQUIPMENT
PLUG BREAK
SUB PANEL D
SUB PANEL C
SUB PANEL J
SUB PANEL B
TERMI. BLOCK
EMERGENCY
PART OF BATT SELECT SWITCH
EXT BATT CHGE SW
CLOSE
TRIP
BUS TIE SWITCH
SUB-PANEL H
BATTERY
0VOLT TRIP
U/VOLTS 0/VOLTS SENSOR
VOLTMETER SELECT SW.
D.C. VOLTMETER
0-40 AMPS
GEN/BATT AMPS
BATTERY ISOLATE SW.
GROUND SUPP MASTER SW
SUB PANEL C
1 D.C. POWER DISTRIBUTION (N03A SH. 2)
2 D.C. GENERATING SYSTEM No1 (N01A)
3 D.C. GENERATING SYSTEM No 2 (N01B)
4 D.C. POWER DISTRIBUTION (N03B)
5 EARTH CHAIN (N03C)
6 ENGINE START & IGNITION (N04)
7 MASTER WARNING SYSTEM (N51)
8 COCKPIT LIGHTS (N12A)
9 THIRD BATTERY IF FITTED (N03F)
10 S.O.O. EMERG PWR (STBY INSTS) (N37F) (WHEN FITTED)
11 LINKS ON VOLT SEL SWITCH TO RF PTFE EQUIP. WIRE BLACK TO BS G210 TYPE B.
12 SEE SHEET 3.
ART ID # HA00F890029AA-1
25-8NA5-403A SH1
DWG ISS - 10

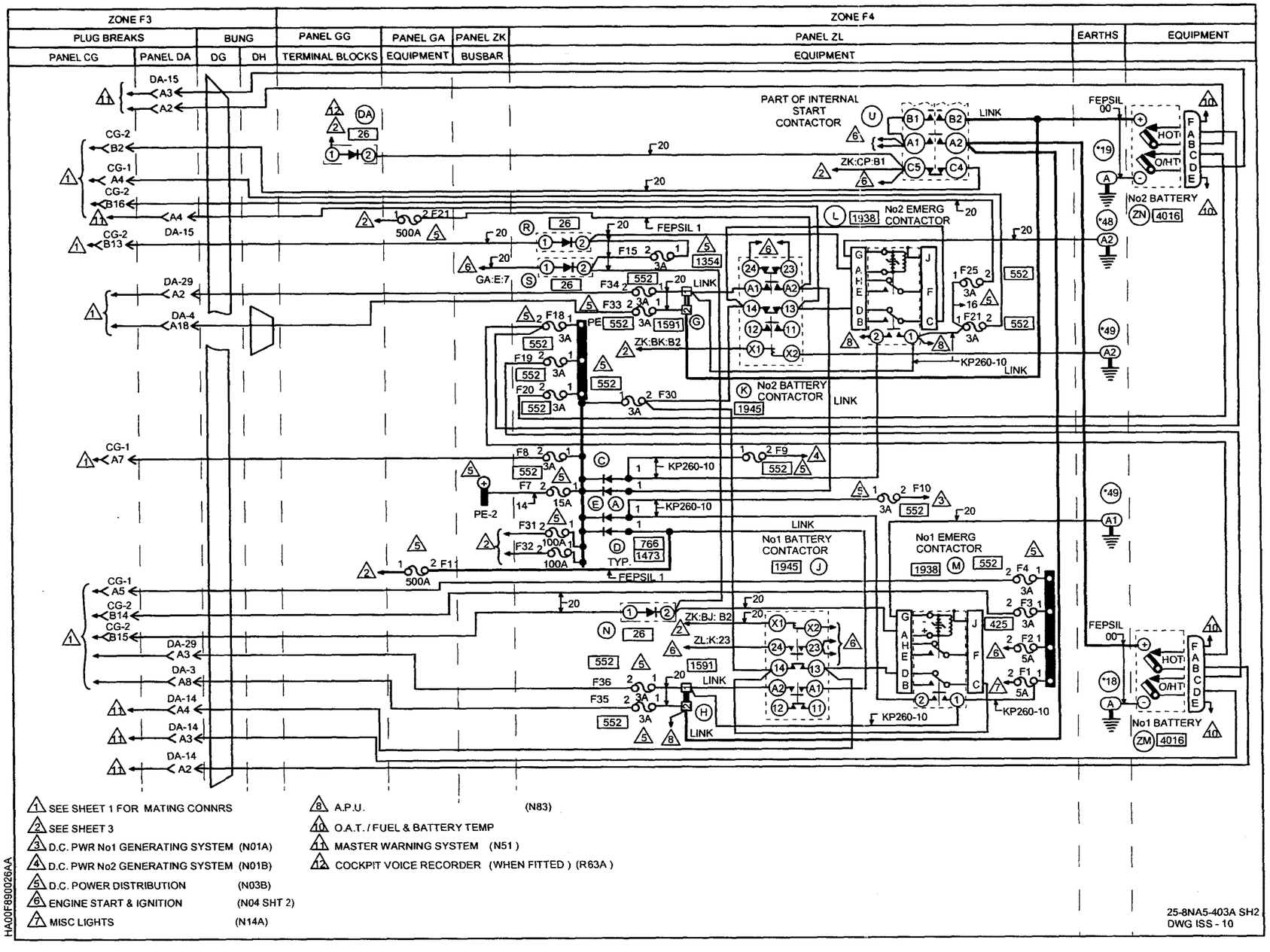
ZONE F3
ZONE F4
PLUG BREAKS
BUNG
PANEL GG
PANEL GA
PANEL ZK
PANEL ZL
EARTHS
EQUIPMENT
PANEL CG
PANEL DA
DG
DH
TERMINAL BLOCKS
EQUIPMENT
BUSBAR
EQUIPMENT
PART OF INTERNAL START CONTACTOR
No2 EMERG CONTACTOR
No2 BATTERY CONTACTOR
No1 BATTERY CONTACTOR
No1 EMERG CONTACTOR
No2 BATTERY
No1 BATTERY
FEPSIL 00
FEPSIL 1
LINK
KP260-10
ZK:CP:B1
ZK:BK:B2
ZK:BJ: B2
ZL:K:23
GA:E:7
PE-2
TYP.
1 SEE SHEET 1 FOR MATING CONNRS
2 SEE SHEET 3
3 D.C. PWR No1 GENERATING SYSTEM (N01A)
4 D.C. PWR No2 GENERATING SYSTEM (N01B)
5 D.C. POWER DISTRIBUTION (N03B)
6 ENGINE START & IGNITION (N04 SHT 2)
7 MISC LIGHTS (N14A)
8 A.P.U. (N83)
10 O.A.T. / FUEL & BATTERY TEMP
11 MASTER WARNING SYSTEM (N51)
12 COCKPIT VOICE RECORDER (WHEN FITTED) (R63A)
HA00F890026AA
25-8NA5-403A SH2
DWG ISS - 10

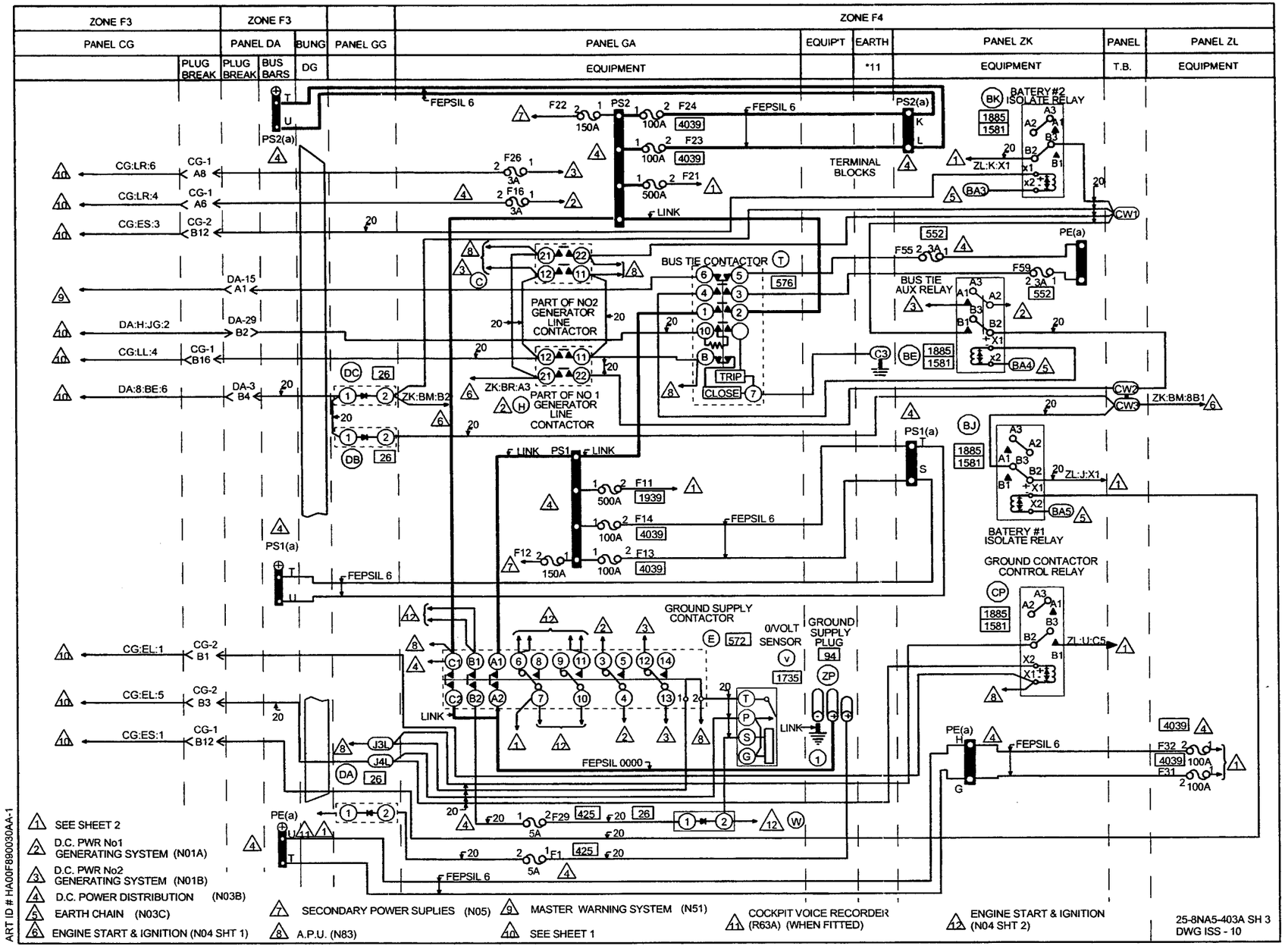
ZONE F3
ZONE F3
ZONE F4
PANEL CG
PANEL DA
BUNG
PANEL GG
PANEL GA
EQUIP'T
EARTH
PANEL ZK
PANEL
PANEL ZL
PLUG BREAK
PLUG BREAK
BUS BARS
DG
EQUIPMENT
*11
EQUIPMENT
T.B.
EQUIPMENT
FEPSIL 6
PS2
PS2(a)
F22
150A
F24
100A
4039
F23
100A
4039
F21
500A
F26
3A
F16
3A
LINK
TERMINAL BLOCKS
BATERY #2 ISOLATE RELAY
1885
1581
ZL:K:X1
BA3
CW1
CG:LR:6
CG-1 A8
CG:LR:4
CG-1 A6
CG:ES:3
CG-2 B12
DA-15 A1
DA:H:JG:2
DA-29 B2
CG:LL:4
CG-1 B16
DA:8:BE:6
DA-3 B4
552
PE(a)
F55
3A
F59
3A
BUS TIE CONTACTOR
576
BUS TIE AUX RELAY
PART OF NO2 GENERATOR LINE CONTACTOR
TRIP
CLOSE
BA4
DC
26
ZK:BR:A3
ZK:BM:B2
PART OF NO 1 GENERATOR LINE CONTACTOR
DB
26
CW2
CW3
ZK:BM:8B1
PS1(a)
BJ
ZL:J:X1
BA5
BATERY #1 ISOLATE RELAY
PS1
F11
500A
1939
F14
100A
4039
F13
100A
4039
F12
150A
GROUND CONTACTOR CONTROL RELAY
CP
ZL:U:C5
GROUND SUPPLY CONTACTOR
E
572
0/VOLT SENSOR
V
1735
GROUND SUPPLY PLUG
94
ZP
CG:EL:1
CG-2 B1
CG:EL:5
CG-2 B3
CG:ES:1
CG-1 B12
J3L
J4L
DA
26
FEPSIL 0000
F29
425
26
F1
425
5A
F32
4039
100A
F31
100A
1 SEE SHEET 2
2 D.C. PWR No1 GENERATING SYSTEM (N01A)
3 D.C. PWR No2 GENERATING SYSTEM (N01B)
4 D.C. POWER DISTRIBUTION (N03B)
5 EARTH CHAIN (N03C)
6 ENGINE START & IGNITION (N04 SHT 1)
7 SECONDARY POWER SUPLIES (N05)
8 A.P.U. (N83)
9 MASTER WARNING SYSTEM (N51)
10 SEE SHEET 1
11 COCKPIT VOICE RECORDER (R63A) (WHEN FITTED)
12 ENGINE START & IGNITION (N04 SHT 2)
25-8NA5-403A SH 3
DWG ISS - 10
ART ID # HA00F890030AA-1

IDENT	PART NUMBER	1234567 NOMENCLATURE	EFFECT FROM TO	UNITS PER ASSY
		DC POWER DISTRIBUTION	092093 095096 098105 107108	
	25-8NA5-403A	WIRING DIAGRAM- (MODIFIED BY SB24-285-253273A) (MOD 253149C) (MOD 25F505A)		RF
A-ZL	BAEREF000003234	.DIODE- (SW06HHN400SUU9096 (VU0544))		1
AA-DAB	HDS8SF2L03	.RELAY- (VK1793) (USED WITH SOCKET: RSE120074 (V58982))		1
AB-DAB	HDS8SF2L03	.RELAY- (VK1793) (USED WITH SOCKET: RSE120074 (V58982))		1
AC-DAB	HDS8SF2L03	.RELAY- (VK1793) (USED WITH SOCKET: RSE120074 (V58982))		1
BA-ZK	HWBUN1146S10B	.TERMINAL BLOCK- (VK0574)		1
BD-DAB	HDS8SF3J03	.RELAY- (VK1793) (USED WITH SOCKET: RSE120074 (V58982))		1
BE-DAB	HDS8SF3J03	.RELAY- (VK1793) (USED WITH SOCKET: RSE120074 (V58982))		1
BE-ZK	M300-1264	.RELAY- (VK6265) (USED WITH SOCKET: M12883-41-16 (V81349))		1
BJ-ZK	M300-1264	.RELAY- (VK6265) (USED WITH SOCKET: M12883-41-16 (V81349))		1
		MISSING ITEM NO. NOT APPLICABLE		

– ITEM NOT ILLUSTRATED

IDENT	PART NUMBER	1234567 NOMENCLATURE	EFFECT FROM TO	UNITS PER ASSY
BK-ZK	M300-1264	.RELAY- (VK6265) (USED WITH SOCKET: M12883-41-16 (V81349))		1
B116-DAD	483TCG11J25-3A	.CIRCUIT BREAKER-3AMP (VU0091)		1
B85-DAD	483TCG11J25-3A	.CIRCUIT BREAKER-3AMP (VU0091)		1
C-GA	A703ZS	.CONTACTOR- (V74063)		1
C-ZL	BAEREF000003234	.DIODE- (SW06HHN400SUU9096 (VU0544))		1
CG1-P	MTC100YH2-009	.SHELL-PLUG (VK1010) (USED WITH WAFERS: TYPE A, MTC100KT2-1101 TYPE B, MTC100KT2-1102)		1
CG1-R	MTC100YH2-010	.SHELL-RECEPTACLE (VK1010) (USED WITH WAFERS: TYPE A, MTC100KT2-1103 TYPE B, MTC100KT2-1104)		1
CG2-P	MTC100YH2-009	.SHELL-PLUG (VK1010) (USED WITH WAFERS: TYPE A, MTC100KT2-1101 TYPE B, MTC100KT2-1102)		1
CG2-R	MTC100YH2-010	.SHELL-RECEPTACLE (VK1010) (USED WITH WAFERS: TYPE A, MTC100KT2-1103 TYPE B, MTC100KT2-1104)		1
CP-ZK	M300-1264	.RELAY- (VK6265) (USED WITH SOCKET: M12883-41-16 (V81349))		1
CW-ZK	HWBUN1146S10B	.TERMINAL BLOCK- (VK0574)		1
D-ZL	BAEREF000003234	.DIODE- (SW06HHN400SUU9096 (VU0544))		1
DA-GG	CV7313	.DIODE- (VK0004)		1
		MISSING ITEM NO. NOT APPLICABLE		

– ITEM NOT ILLUSTRATED

IDENT	PART NUMBER	1234567 NOMENCLATURE	EFFECT FROM TO	UNITS PER ASSY
DA1-P	MTC100YH1-003	.SHELL-PLUG (VK1010) (USED WITH WAFERS: TYPE A, MTC100KT1-1101 TYPE B, MTC100KT1-1102)		1
DA1-R	MTC100YH1-004	.SHELL-RECEPTACLE (VK1010) (USED WITH WAFERS: TYPE A, MTC100KT1-1103 TYPE B, MTC100KT1-1104)		1
DA14-P	MTC100YH1-003	.SHELL-PLUG (VK1010) (USED WITH WAFERS: TYPE A, MTC100KT1-1101 TYPE B, MTC100KT1-1102)		1
DA14-R	MTC100YH1-004	.SHELL-RECEPTACLE (VK1010) (USED WITH WAFERS: TYPE A, MTC100KT1-1103 TYPE B, MTC100KT1-1104)		1
DA15-P	MTC100YH1-003	.SHELL-PLUG (VK1010) (USED WITH WAFERS: TYPE A, MTC100KT1-1101 TYPE B, MTC100KT1-1102)		1
DA15-R	MTC100YH1-004	.SHELL-RECEPTACLE (VK1010) (USED WITH WAFERS: TYPE A, MTC100KT1-1103 TYPE B, MTC100KT1-1104)		1
DA19-P	MTC100YH2-009	.SHELL-PLUG (VK1010) (USED WITH WAFERS: TYPE A, MTC100KT2-1101 TYPE B, MTC100KT2-1102)		1
DA19-R	MTC100YH2-010	.SHELL-RECEPTACLE (VK1010) (USED WITH WAFERS: TYPE A, MTC100KT2-1103 TYPE B, MTC100KT2-1104)		1
DA20-P	MTC100YH2-009	.SHELL-PLUG (VK1010) (USED WITH WAFERS: TYPE A, MTC100KT2-1101 TYPE B, MTC100KT2-1102)		1
DA20-R	MTC100YH2-010	.SHELL-RECEPTACLE (VK1010) (USED WITH WAFERS: TYPE A, MTC100KT2-1103 TYPE B, MTC100KT2-1104)		1
		MISSING ITEM NO. NOT APPLICABLE		

– ITEM NOT ILLUSTRATED

IDENT	PART NUMBER	1234567 NOMENCLATURE	EFFECT FROM TO	UNITS PER ASSY
DA21-P	MTC100YH2-009	.SHELL-PLUG (VK1010) (USED WITH WAFERS: TYPE A, MTC100KT2-1101 TYPE B, MTC100KT2-1102)		1
DA21-R	MTC100YH2-010	.SHELL-RECEPTACLE (VK1010) (USED WITH WAFERS: TYPE A, MTC100KT2-1103 TYPE B, MTC100KT2-1104)		1
DA29-P	MTC100YH1-003	.SHELL-PLUG (VK1010) (USED WITH WAFERS: TYPE A, MTC100KT1-1101 TYPE B, MTC100KT1-1102)		1
DA29-R	MTC100YH1-004	.SHELL-RECEPTACLE (VK1010) (USED WITH WAFERS: TYPE A, MTC100KT1-1103 TYPE B, MTC100KT1-1104)		1
DA3-P	MTC100YH1-003	.SHELL-PLUG (VK1010) (USED WITH WAFERS: TYPE A, MTC100KT1-1101 TYPE B, MTC100KT1-1102)		1
DA3-R	MTC100YH1-004	.SHELL-RECEPTACLE (VK1010) (USED WITH WAFERS: TYPE A, MTC100KT1-1103 TYPE B, MTC100KT1-1104)		1
DA4-P	MTC100YH2-009	.SHELL-PLUG (VK1010) (USED WITH WAFERS: TYPE A, MTC100KT2-1101 TYPE B, MTC100KT2-1102)		1
DA4-R	MTC100YH2-010	.SHELL-RECEPTACLE (VK1010) (USED WITH WAFERS: TYPE A, MTC100KT2-1103 TYPE B, MTC100KT2-1104)		1
DB-GG	CV7313	.DIODE- (VK0004)		1
DC-GG	CV7313	.DIODE- (VK0004)		1
DG	422255-8	.BUNG- (VK1793)		1
DH	422254-9	.BUNG- (VK1793)		1
E-GA	LDG150Y4	.CONTACTOR- (VK4358)		1
		MISSING ITEM NO. NOT APPLICABLE		

- ITEM NOT ILLUSTRATED

IDENT	PART NUMBER	1234567 NOMENCLATURE	EFFECT FROM TO	UNITS PER ASSY
E-ZL	BAEREF000003234	.DIODE- (SW06HHN400SUU9096 (VU0544))		1
EK-CG	2TP1-3	.SWITCH- (V91929) (OPT (VK6596))		1
EL-CG	2TP1-3	.SWITCH- (V91929) (OPT (VK6596))		1
EN-CG	4TP1-10	.SWITCH- (V91929) (OPT (VK6596))		1
ES-CG	1TP1-1	.SWITCH- (V91929)		1
F1-GA	5920-99-0120076	.FUSE-5AMP (VK0657)		1
F1-ZL	5920-99-0120076	.FUSE-5AMP (VK0657)		1
F10-ZL	5920-99-0120075	.FUSE-3AMP (VK0657)		1
F11-DAC	5920-99-0120075	.FUSE-3AMP (VK0657)		1
F11-GA	L1330A500	.FUSE-500AMP (VU0154)		1
F12-GA	L133CA150	.FUSE-150AMP (VU0154)		1
F13-GA	UAM100	.FUSE-100AMP (VK0672)		1
F14-DAC	5920-99-0120076	.FUSE-5AMP (VK0657)		1
F14-GA	UAM100	.FUSE-100AMP (VK0672)		1
F15-ZL	5920-99-0120074	.FUSE-2AMP (VK0657)		1
F16-GA	5920-99-0120075	.FUSE-3AMP (VK0657)		1
F18-ZL	5920-99-0120075	.FUSE-3AMP (VK0657)		1
F19-ZL	5920-99-0120075	.FUSE-3AMP (VK0657)		1
F2-ZL	5920-99-0120076	.FUSE-5AMP (VK0657)		1
F20-ZL	5920-99-0120075	.FUSE-3AMP (VK0657)		1
F21-GA	L1330A500	.FUSE-500AMP (VU0154)		1
F21-ZL	5920-99-0120075	.FUSE-3AMP (VK0657)		1
F22-GA	L133CA150	.FUSE-150AMP (VU0154)		1
		MISSING ITEM NO. NOT APPLICABLE		

– ITEM NOT ILLUSTRATED

IDENT	PART NUMBER	1234567 NOMENCLATURE	EFFECT FROM TO	UNITS PER ASSY
F23-GA	UAM100	.FUSE-100AMP (VK0672)		1
F24-GA	UAM100	.FUSE-100AMP (VK0672)		1
F25-ZL	5920-99-0120075	.FUSE-3AMP (VK0657)		1
F26-GA	5920-99-0120075	.FUSE-3AMP (VK0657)		1
F29-GA	5920-99-0120076	.FUSE-5AMP (VK0657)		1
F3-ZL	5920-99-0120076	.FUSE-5AMP (VK0657)		1
F30-ZL	5920-99-0120075	.FUSE-3AMP (VK0657)		1
F31-ZL	UAM100	.FUSE-100AMP (VK0657)		1
F32-ZL	UAM100	.FUSE-100AMP (VK0657)		1
F33-ZL	5920-99-0120075	.FUSE-3AMP (VK0657)		1
F34-ZL	5920-99-0120075	.FUSE-3AMP (VK0657)		1
F35-ZL	5920-99-0120075	.FUSE-3AMP (VK0657)		1
F36-ZL	5920-99-0120075	.FUSE-3AMP (VK0657)		1
F4-ZL	5920-99-0120075	.FUSE-3AMP (VK0657)		1
F55-ZK	5920-99-0120075	.FUSE-3AMP (VK0657)		1
F59-ZK	5920-99-0120075	.FUSE-3AMP (VK0657)		1
F7-ZL	5920-99-0120079	.FUSE-15AMP (VK0657)		1
F8-ZL	5920-99-0120075	.FUSE-3AMP (VK0657)		1
F9-ZL	5920-99-0120075	.FUSE-3AMP (VK0657)		1
G-ZL	1628	.SHUNT- (VK4383)		1
H-GA	A703ZS	.CONTACTOR- (V74063)		1
H-ZL	1628	.SHUNT- (VK4383)		1
J-GG	HWBUN1146D10B	.TERMINAL BLOCK- (VK0574)		1
J-ZL	A770RSSA	.CONTACTOR- (V74063)		1
JG-DAH	U3626	.VOLTAGE CONTROLLER- (VK0023)		1
		MISSING ITEM NO. NOT APPLICABLE		

- ITEM NOT ILLUSTRATED

IDENT	PART NUMBER	1234567 NOMENCLATURE	EFFECT FROM TO	UNITS PER ASSY
JR-CG	2132-01-0012	.INDICATOR-DC VOLTAGE (VU1588)		1
K-ZL	A770RSSA	.CONTACTOR- (V74063)		1
L-ZL	9124-9290	.CONTACTOR- (VK6265)		1
LL-CG	2TP1-70	.SWITCH- (V91929) (OPT (VK6596))		1
LN-CG	WC1503	.SWITCH- (VK0653)		1
LP-CG	WC1503	.SWITCH- (VK0653)		1
LR-CG	9A60-02-1-6N	.SWITCH- (V81073)		1
M-ZL	9124-9290	.CONTACTOR- (VK6265)		1
N-ZL	CV7313	.DIODE- (VK0004) (OPT BYX38-600) (OPT BYX48-600) (POST SB24-317)		1
PP	HWBUN1146D10B	.TERMINAL BLOCK- (VK0574)		1
R-ZL	CV7313	.DIODE- (VK0004) (OPT BYX38-600) (OPT BYX48-600) (POST SB24-317)		1
RC-DAB	5905-99-0140445	.RESISTOR- (VK0064)		1
RD-DAB	5905-99-0140302	.RESISTOR- (VK0064)		1
RE-DAB	BAEREF000004352	.RESISTOR- (403CC80R6PM0-5PCT (VK0064))		1
RF-DAB	BAEREF000004352	.RESISTOR- (403CC80R6PM0-5PCT (VK0064))		1
S-ZL	CV7313	.DIODE- (VK0004) (OPT BYX38-600) (OPT BYX48-600) (POST SB24-317)		1
SR-DAJ	CV7313	.DIODE- (VK0004)		1
SS-DAJ	CV7313	.DIODE- (VK0004)		1
T-GA	LDA150A8	.CONTACTOR- (VK4358)		1
		MISSING ITEM NO. NOT APPLICABLE		

– ITEM NOT ILLUSTRATED

IDENT	PART NUMBER	1234567 NOMENCLATURE	EFFECT FROM TO	UNITS PER ASSY
U-ZL	A84MAS	.CONTACTOR- (V74063)		1
V-GA	E311TS	.OVERVOLT SENSOR- (V74063)		1
VM	HWBUN1146S10B	.TERMINAL BLOCK- (VK0574)		1
W-GA	CV7313	.DIODE- (VK0004)		1
X13-DAB	MRTB20E04-111	.TERMINAL JUNCTION MODULE- (V14283)		1
X16-DAB	MRTB20E57-111	.TERMINAL JUNCTION MODULE- (V14283)		1
X3-DAB	MRTB20E57-111	.TERMINAL JUNCTION MODULE- (V14283)		1
X4-DAB	MRTB20E57-111	.TERMINAL JUNCTION MODULE- (V14283)		1
Y14-DAB	MRTB20E57-111	.TERMINAL JUNCTION MODULE- (V14283)		1
ZM	23491-3	.BATTERY- (VK0371) (USED WITH CONNECTOR: 23491-3 (V85901))		1
ZN	23491-3	.BATTERY- (VK0371) (USED WITH CONNECTOR: 23491-3 (V85901))		1
ZP	GCB3LV14GB183	.PLUG- (V71468) (OPT (VK0316))		1
		MISSING ITEM NO. NOT APPLICABLE		

- ITEM NOT ILLUSTRATED

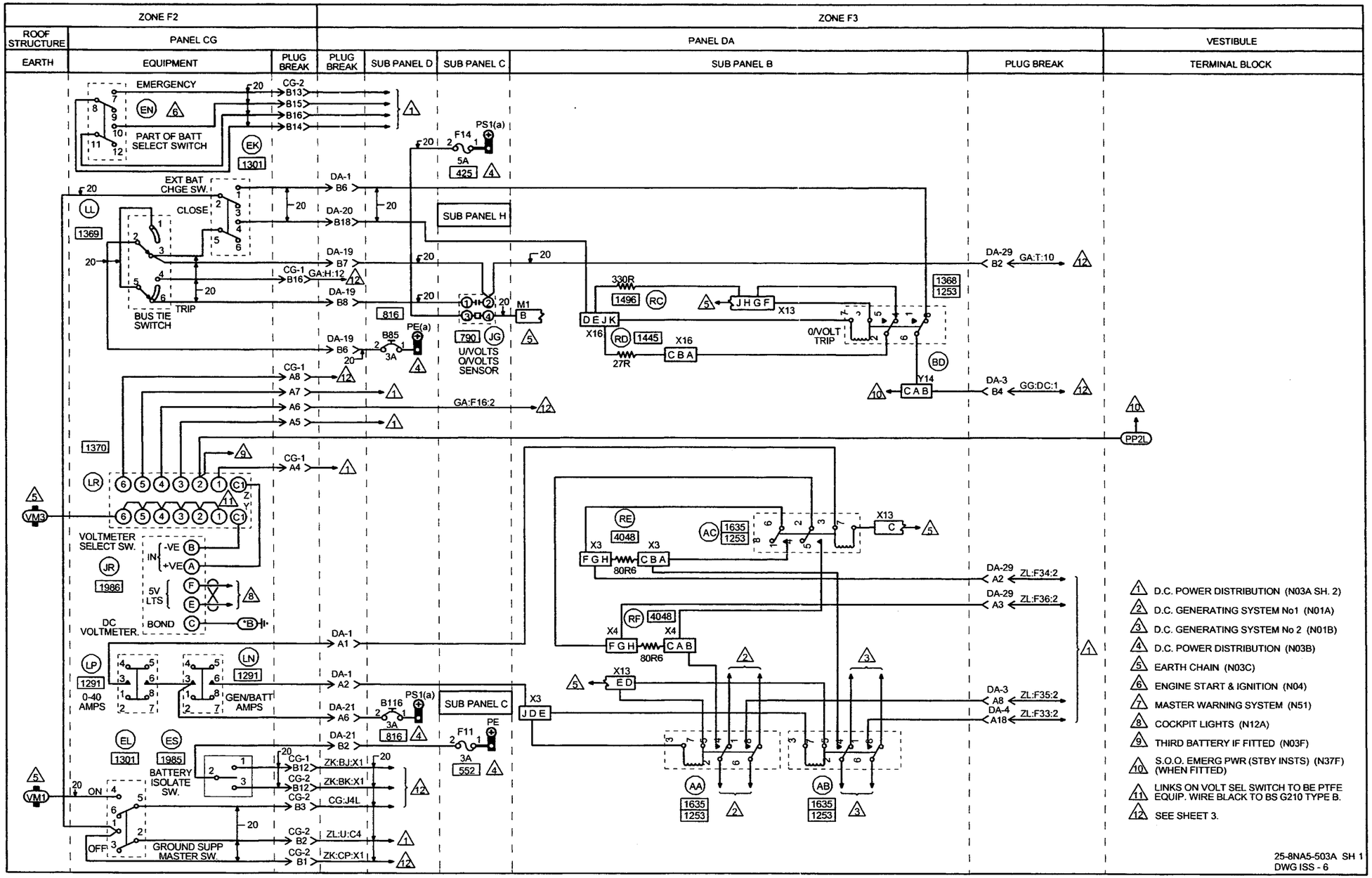

ART ID # HA00F890825AA

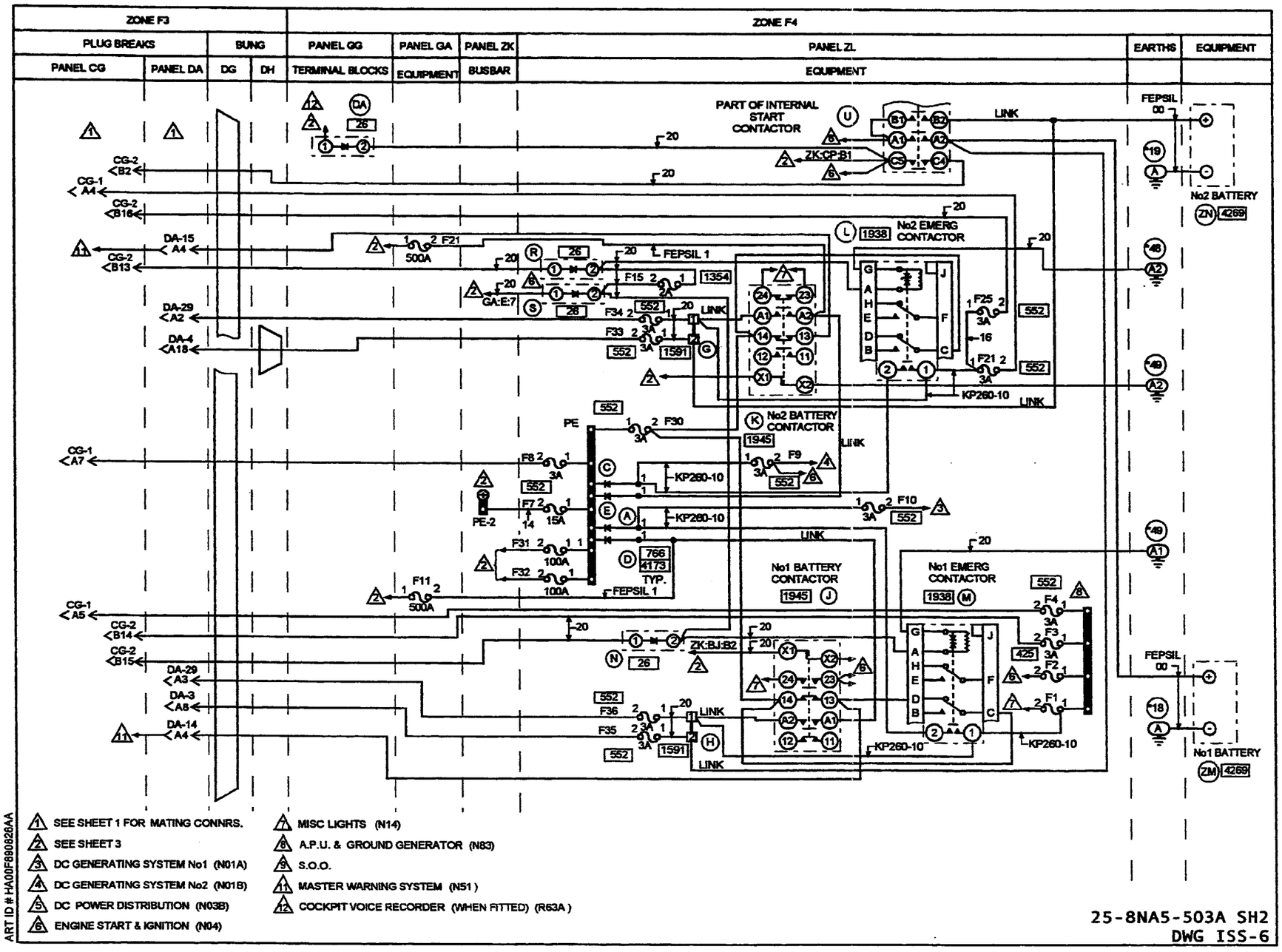
ZONE F3
ZONE F4
PLUG BREAKS
BUNG
PANEL GG
PANEL GA
PANEL ZK
PANEL ZL
EARTHS
EQUIPMENT
PANEL CG
PANEL DA
DG
DH
TERMINAL BLOCKS
EQUIPMENT
BUSBAR
EQUIPMENT
PART OF INTERNAL START CONTACTOR
LINK
FEPSIL 00
No2 BATTERY
No2 EMERG CONTACTOR
No2 BATTERY CONTACTOR
No1 BATTERY CONTACTOR
No1 EMERG CONTACTOR
No1 BATTERY
KP260-10
FEPSIL 1
ZK:CP:B1
ZK:BJ:B2
GA:E:7
PE
PE-2
CG-2 B2
CG-1 A4
CG-2 B16
DA-15 A4
CG-2 B13
DA-29 A2
DA-4 A18
CG-1 A7
CG-1 A5
CG-2 B14
CG-2 B15
DA-29 A3
DA-3 A8
DA-14 A4
1 SEE SHEET 1 FOR MATING CONNRS.
2 SEE SHEET 3
3 DC GENERATING SYSTEM No1 (N01A)
4 DC GENERATING SYSTEM No2 (N01B)
5 DC POWER DISTRIBUTION (N03B)
6 ENGINE START & IGNITION (N04)
7 MISC LIGHTS (N14)
8 A.P.U. & GROUND GENERATOR (N83)
9 S.O.O.
11 MASTER WARNING SYSTEM (N51)
12 COCKPIT VOICE RECORDER (WHEN FITTED) (R63A)
ART ID # HA00F890826AA
25-8NA5-503A SH2
DWG ISS-6

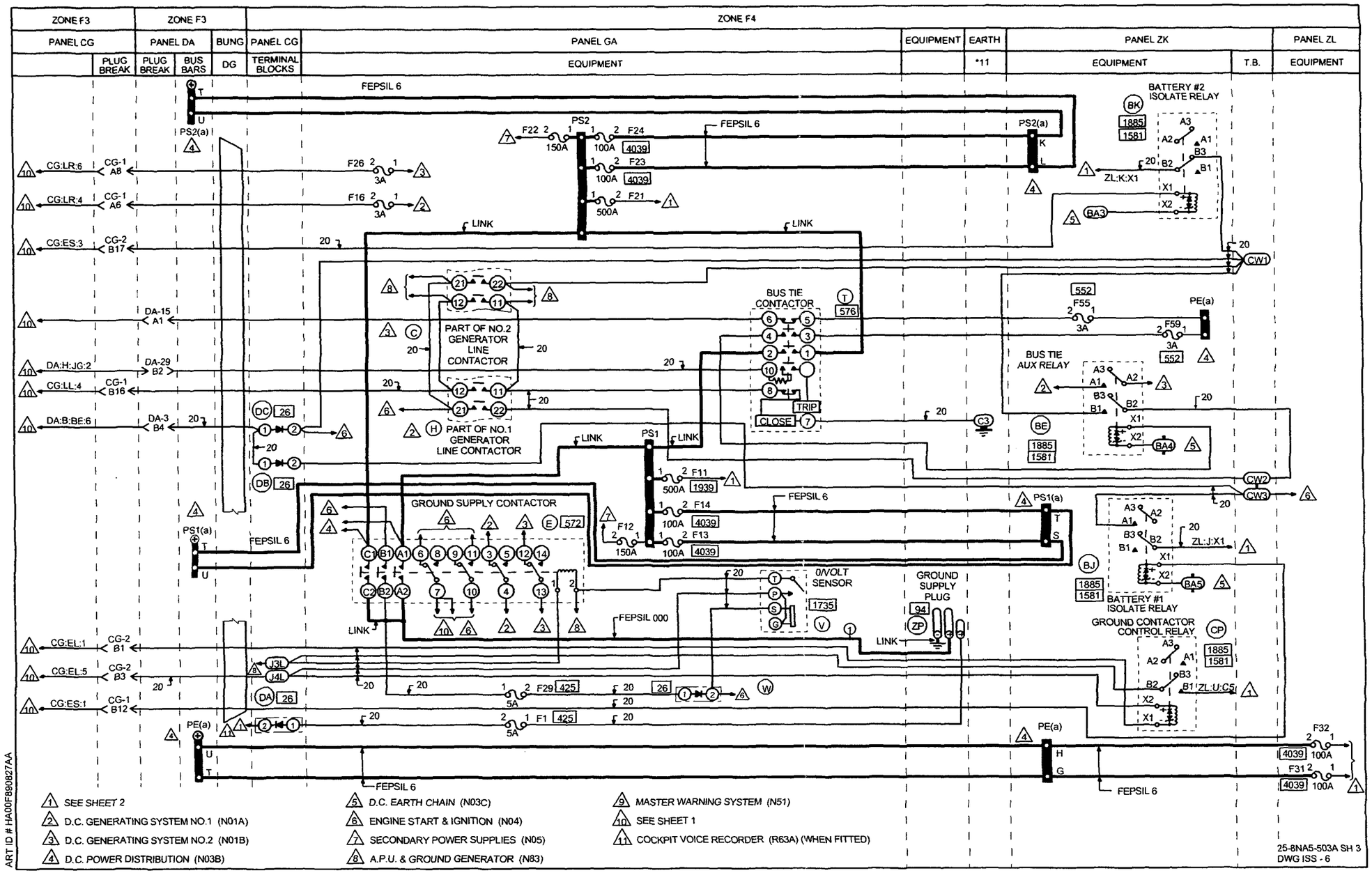
ZONE F3
ZONE F3
ZONE F4
PANEL CG
PANEL DA
BUNG
PANEL CG
PANEL GA
EQUIPMENT
EARTH
PANEL ZK
PANEL ZL
PLUG BREAK
PLUG BREAK
BUS BARS
DG
TERMINAL BLOCKS
EQUIPMENT
*11
EQUIPMENT
T.B.
EQUIPMENT
FEPSIL 6
PS2(a)
PS2
F22
150A
F24
100A
4039
F23
100A
4039
F21
500A
F26
3A
F16
3A
CG:LR:6
CG-1 A8
CG:LR:4
CG-1 A6
CG:ES:3
CG-2 B17
DA-15 A1
DA:H:JG:2
DA-29 B2
CG:LL:4
CG-1 B16
DA:B:BE:6
DA-3 B4
LINK
PART OF NO.2 GENERATOR LINE CONTACTOR
PART OF NO.1 GENERATOR LINE CONTACTOR
BUS TIE CONTACTOR
576
TRIP
CLOSE
BATTERY #2 ISOLATE RELAY
1885
1581
ZL:K:X1
BA3
CW1
552
F55
3A
F59
3A
PE(a)
BUS TIE AUX RELAY
BA4
C3
BE
CW2
CW3
ZL:J:X1
PS1(a)
PS1
F11
500A
1939
F14
100A
4039
F13
100A
4039
F12
150A
GROUND SUPPLY CONTACTOR
572
BJ
BA5
BATTERY #1 ISOLATE RELAY
0/VOLT SENSOR
1735
GROUND SUPPLY PLUG
94
ZP
GROUND CONTACTOR CONTROL RELAY
CP
ZL:U:C5
FEPSIL 000
CG:EL:1
CG-2 B1
CG:EL:5
CG-2 B3
CG:ES:1
CG-1 B12
J3L
J4L
DA
26
DB
26
DC
26
F29
425
5A
F1
425
5A
F32
100A
F31
100A
4039
1 SEE SHEET 2
2 D.C. GENERATING SYSTEM NO.1 (N01A)
3 D.C. GENERATING SYSTEM NO.2 (N01B)
4 D.C. POWER DISTRIBUTION (N03B)
5 D.C. EARTH CHAIN (N03C)
6 ENGINE START & IGNITION (N04)
7 SECONDARY POWER SUPPLIES (N05)
8 A.P.U. & GROUND GENERATOR (N83)
9 MASTER WARNING SYSTEM (N51)
10 SEE SHEET 1
11 COCKPIT VOICE RECORDER (R63A) (WHEN FITTED)
ART ID # HA00F890827AA
25-8NA5-503A SH 3
DWG ISS - 6

IDENT	PART NUMBER	1234567 NOMENCLATURE	EFFECT FROM TO	UNITS PER ASSY
		DC POWER DISTRIBUTION	111111 113114 117117 119119 121129 132132 135142 144145 147147 150163 166166 168176 178179 181181 183183 185185 187189 191191 193193 195196 199207 209209 214218 220221 223223 225225 229232 234234 236236 238257 259276	
	25-8NA5-503A	WIRING DIAGRAM- (MODIFIED BY SB24-286-253272A) (MOD 253187A)		RF
A-ZL	BAEREF000003234	.DIODE- (SW06HHN400SUU9096 (VU0544))		1
AA-DAB	HDS8SF2L03	.RELAY- (VK1793) (USED WITH SOCKET: RSE120074 (V58982))		1
AB-DAB	HDS8SF2L03	.RELAY- (VK1793) (USED WITH SOCKET: RSE120074 (V58982))		1
		MISSING ITEM NO. NOT APPLICABLE		

– ITEM NOT ILLUSTRATED

IDENT	PART NUMBER	1234567 NOMENCLATURE	EFFECT FROM TO	UNITS PER ASSY
AC-DAB	HDS8SF2L03	.RELAY- (VK1793) (USED WITH SOCKET: RSE120074 (V58982))		1
BA-ZK	HWBUN1146S10B	.TERMINAL BLOCK- (VK0574)		1
BD-DAB	HDS8SF3J03	.RELAY- (VK1793) (USED WITH SOCKET: RSE120074 (V58982))		1
BE-ZK	M300-1264	.RELAY- (VK6265) (USED WITH SOCKET: M12883-41-16 (V81349))		1
BJ-ZK	M300-1264	.RELAY- (VK6265) (USED WITH SOCKET: M12883-41-16 (V81349))		1
BK-ZK	M300-1264	.RELAY- (VK6265) (USED WITH SOCKET: M12883-41-16 (V81349))		1
B116-DAD	483TCG11J25-3A	.CIRCUIT BREAKER-3AMP (VU0091)		1
B85-DAD	483TCG11J25-3A	.CIRCUIT BREAKER-3AMP (VU0091)		1
C-GA	A703ZS	.CONTACTOR- (V74063)		1
C-ZL	BAEREF000003234	.DIODE- (SW06HHN400SUU9096 (VU0544))		1
		MISSING ITEM NO. NOT APPLICABLE		

– ITEM NOT ILLUSTRATED

IDENT	PART NUMBER	1234567 NOMENCLATURE	EFFECT FROM TO	UNITS PER ASSY
CG1-P	MTC100YH2-009	.SHELL-PLUG (VK1010) (USED WITH WAFERS: TYPE A, MTC100KT2-1101 TYPE B, MTC100KT2-1102)	111111 113114 117117 119119 121129 132132 135142 144145 147147 150163 166166 168176 178179 181181 183183 185185 187189 191191 193193 195196 199207 209209 214218 220221 223223 225225 229232 234234 236236 238254	1
CG1-P	MTC100YH2-009	.SHELL-PLUG (VK1010) (USED WITH INSERTS: PRIMARY MTC100YC1-001 SECONDARY MTC100YC1-002)	255257 259276	1
		MISSING ITEM NO. NOT APPLICABLE		

– ITEM NOT ILLUSTRATED

IDENT	PART NUMBER	1234567 NOMENCLATURE	EFFECT FROM TO	UNITS PER ASSY
CG1-R	MTC100YH2-010	.SHELL-RECEPTACLE (VK1010) (USED WITH WAFERS: TYPE A, MTC100KT2-1103 TYPE B, MTC100KT2-1104)	111111 113114 117117 119119 121129 132132 135142 144145 147147 150163 166166 168176 178179 181181 183183 185185 187189 191191 193193 195196 199207 209209 214218 220221 223223 225225 229232 234234 236236 238254	1
CG1-R	MTC100YH2-010	.SHELL-RECEPTACLE (VK1010) (USED WITH INSERTS: PRIMARY MTC100YC1-003 SECONDARY MTC100YC1-004)	255257 259276	1
		MISSING ITEM NO. NOT APPLICABLE		

– ITEM NOT ILLUSTRATED

IDENT	PART NUMBER	1234567 NOMENCLATURE	EFFECT FROM TO	UNITS PER ASSY
CG2-P	MTC100YH2-009	.SHELL-PLUG (VK1010) (USED WITH WAFERS: TYPE A, MTC100KT2-1101 TYPE B, MTC100KT2-1102)	111111 113114 117117 119119 121129 132132 135142 144145 147147 150163 166166 168176 178179 181181 183183 185185 187189 191191 193193 195196 199207 209209 214218 220221 223223 225225 229232 234234 236236 238254	1
CG2-P	MTC100YH2-009	.SHELL-PLUG (VK1010) (USED WITH INSERTS: PRIMARY MTC100YC1-001 SECONDARY MTC100YC1-002)	255257 259276	1
		MISSING ITEM NO. NOT APPLICABLE		

– ITEM NOT ILLUSTRATED

IDENT	PART NUMBER	1234567 NOMENCLATURE	EFFECT FROM TO	UNITS PER ASSY
CG2-R	MTC100YH2-010	.SHELL-RECEPTACLE (VK1010) (USED WITH WAFERS: TYPE A, MTC100KT2-1103 TYPE B, MTC100KT2-1104)	111111 113114 117117 119119 121129 132132 135142 144145 147147 150163 166166 168176 178179 181181 183183 185185 187189 191191 193193 195196 199207 209209 214218 220221 223223 225225 229232 234234 236236 238254	1
CG2-R	MTC100YH2-010	.SHELL-RECEPTACLE (VK1010) (USED WITH INSERTS: PRIMARY MTC100YC1-003 SECONDARY MTC100YC1-004)	255257 259276	1
CP-ZK	M300-1264	.RELAY- (VK6265) (USED WITH SOCKET: M12883-41-16 (V81349))		1
CW-ZK	HWBUN1146S10B	.TERMINAL BLOCK- (VK0574)		1
D-ZL	BAEREF000003234	.DIODE- (SW06HHN400SUU9096 (VU0544))		1
DA-GG	CV7313	.DIODE- (VK0004)		1
		MISSING ITEM NO. NOT APPLICABLE		

– ITEM NOT ILLUSTRATED

IDENT	PART NUMBER	1234567 NOMENCLATURE	EFFECT FROM TO	UNITS PER ASSY
DA1-P	MTC100YH1-003	.SHELL-PLUG (VK1010) (USED WITH WAFERS: TYPE A, MTC100KT1-1101 TYPE B, MTC100KT1-1102)	111111 113114 117117 119119 121129 132132 135142 144145 147147 150163 166166 168176 178179 181181 183183 185185 187189 191191 193193 195196 199207 209209 214218 220221 223223 225225 229232 234234 236236 238254	1
DA1-P	MTC100YH1-003	.SHELL-PLUG (VK1010) (USED WITH INSERT: MTC100YC1-005)	255257 259276	1
		MISSING ITEM NO. NOT APPLICABLE		

– ITEM NOT ILLUSTRATED

IDENT	PART NUMBER	1234567 NOMENCLATURE	EFFECT FROM TO	UNITS PER ASSY
DA1-R	MTC100YH1-004	.SHELL-RECEPTACLE (VK1010) (USED WITH WAFERS: TYPE A, MTC100KT1-1103 TYPE B, MTC100KT1-1104)	111111 113114 117117 119119 121129 132132 135142 144145 147147 150163 166166 168176 178179 181181 183183 185185 187189 191191 193193 195196 199207 209209 214218 220221 223223 225225 229232 234234 236236 238254	1
DA1-R	MTC100YH1-004	.SHELL-RECEPTACLE (VK1010) (USED WITH INSERT: MTC100YC1-006)	255257 259276	1
		MISSING ITEM NO. NOT APPLICABLE		

- ITEM NOT ILLUSTRATED

IDENT	PART NUMBER	1234567 NOMENCLATURE	EFFECT FROM TO	UNITS PER ASSY
DA14-P	MTC100YH1-003	.SHELL-PLUG (VK1010) (USED WITH WAFERS: TYPE A, MTC100KT1-1101 TYPE B, MTC100KT1-1102)	111111 113114 117117 119119 121129 132132 135142 144145 147147 150163 166166 168176 178179 181181 183183 185185 187189 191191 193193 195196 199207 209209 214218 220221 223223 225225 229232 234234 236236 238254	1
DA14-P	MTC100YH1-003	.SHELL-PLUG (VK1010) - (USED WITH INSERT: MTC100YC1-005)	255257 259276	1
		MISSING ITEM NO. NOT APPLICABLE		

– ITEM NOT ILLUSTRATED

IDENT	PART NUMBER	1234567 NOMENCLATURE	EFFECT FROM TO	UNITS PER ASSY
DA14-R	MTC100YH1-004	.SHELL-RECEPTACLE (VK1010) (USED WITH WAFERS: TYPE A, MTC100KT1-1103 TYPE B, MTC100KT1-1104)	111111 113114 117117 119119 121129 132132 135142 144145 147147 150163 166166 168176 178179 181181 183183 185185 187189 191191 193193 195196 199207 209209 214218 220221 223223 225225 229232 234234 236236 238254	1
DA14-R	MTC100YH1-004	.SHELL-RECEPTACLE (VK1010) (USED WITH INSERT: MTC100YC1-006)	255257 259276	1
		MISSING ITEM NO. NOT APPLICABLE		

– ITEM NOT ILLUSTRATED

IDENT	PART NUMBER	1234567 NOMENCLATURE	EFFECT FROM TO	UNITS PER ASSY
DA15-P	MTC100YH1-003	.SHELL-PLUG (VK1010) (USED WITH WAFERS: TYPE A, MTC100KT1-1101 TYPE B, MTC100KT1-1102)	111111 113114 117117 119119 121129 132132 135142 144145 147147 150163 166166 168176 178179 181181 183183 185185 187189 191191 193193 195196 199207 209209 214218 220221 223223 225225 229232 234234 236236 238254	1
DA15-P	MTC100YH1-003	.SHELL-PLUG (VK1010) (USED WITH INSERT: MTC100YC1-005)	255257 259276	1
		MISSING ITEM NO. NOT APPLICABLE		

– ITEM NOT ILLUSTRATED

IDENT	PART NUMBER	1234567 NOMENCLATURE	EFFECT FROM TO	UNITS PER ASSY
DA15-R	MTC100YH1-004	.SHELL-RECEPTACLE (VK1010) (USED WITH WAFERS: TYPE A, MTC100KT1-1103 TYPE B, MTC100KT1-1104)	111111 113114 117117 119119 121129 132132 135142 144145 147147 150163 166166 168176 178179 181181 183183 185185 187189 191191 193193 195196 199207 209209 214218 220221 223223 225225 229232 234234 236236 238254	1
DA15-R	MTC100YH1-004	.SHELL-RECEPTACLE (VK1010) (USED WITH INSERT: MTC100YC1-006)	255257 259276	1
		MISSING ITEM NO. NOT APPLICABLE		

– ITEM NOT ILLUSTRATED

IDENT	PART NUMBER	1234567 NOMENCLATURE	EFFECT FROM TO	UNITS PER ASSY
DA19-P	MTC100YH2-009	.SHELL-PLUG (VK1010) (USED WITH WAFERS: TYPE A, MTC100KT2-1101 TYPE B, MTC100KT2-1102)	111111 113114 117117 119119 121129 132132 135142 144145 147147 150163 166166 168176 178179 181181 183183 185185 187189 191191 193193 195196 199207 209209 214218 220221 223223 225225 229232 234234 236236 238254	1
DA19-P	MTC100YH2-009	.SHELL-PLUG (VK1010) (USED WITH INSERTS: PRIMARY MTC100YC1-001 SECONDARY MTC100YC1-002)	255257 259276	1
		MISSING ITEM NO. NOT APPLICABLE		

– ITEM NOT ILLUSTRATED

IDENT	PART NUMBER	1234567 NOMENCLATURE	EFFECT FROM TO	UNITS PER ASSY
DA19-R	MTC100YH2-010	.SHELL-RECEPTACLE (VK1010) (USED WITH WAFERS: TYPE A, MTC100KT2-1103 TYPE B, MTC100KT2-1104)	111111 113114 117117 119119 121129 132132 135142 144145 147147 150163 166166 168176 178179 181181 183183 185185 187189 191191 193193 195196 199207 209209 214218 220221 223223 225225 229232 234234 236236 238254	1
DA19-R	MTC100YH2-010	.SHELL-RECEPTACLE (VK1010) (USED WITH INSERTS: PRIMARY MTC100YC1-003 SECONDARY MTC100YC1-004)	255257 259276	1
		MISSING ITEM NO. NOT APPLICABLE		

– ITEM NOT ILLUSTRATED

IDENT	PART NUMBER	1234567 NOMENCLATURE	EFFECT FROM TO	UNITS PER ASSY
DA20-P	MTC100YH2-009	.SHELL-PLUG (VK1010) (USED WITH WAFERS: TYPE A, MTC100KT2-1101 TYPE B, MTC100KT2-1102)	111111 113114 117117 119119 121129 132132 135142 144145 147147 150163 166166 168176 178179 181181 183183 185185 187189 191191 193193 195196 199207 209209 214218 220221 223223 225225 229232 234234 236236 238254	1
DA20-P	MTC100YH2-009	.SHELL-PLUG (VK1010) (USED WITH INSERTS: PRIMARY MTC100YC1-001 SECONDARY MTC100YC1-002)	255257 259276	1
		MISSING ITEM NO. NOT APPLICABLE		

– ITEM NOT ILLUSTRATED

IDENT	PART NUMBER	1234567 NOMENCLATURE	EFFECT FROM TO	UNITS PER ASSY
DA20-R	MTC100YH2-010	.SHELL-RECEPTACLE (VK1010) (USED WITH WAFERS: TYPE A, MTC100KT2-1103 TYPE B, MTC100KT2-1104)	111111 113114 117117 119119 121129 132132 135142 144145 147147 150163 166166 168176 178179 181181 183183 185185 187189 191191 193193 195196 199207 209209 214218 220221 223223 225225 229232 234234 236236 238254	1
DA20-R	MTC100YH2-010	.SHELL-RECEPTACLE (VK1010) (USED WITH INSERTS: PRIMARY MTC100YC1-003 SECONDARY MTC100YC1-004)	255257 259276	1
		MISSING ITEM NO. NOT APPLICABLE		

- ITEM NOT ILLUSTRATED

IDENT	PART NUMBER	1234567 NOMENCLATURE	EFFECT FROM TO	UNITS PER ASSY
DA21-P	MTC100YH2-009	.SHELL-PLUG (VK1010) (USED WITH WAFERS: TYPE A, MTC100KT2-1101 TYPE B, MTC100KT2-1102)	111111 113114 117117 119119 121129 132132 135142 144145 147147 150163 166166 168176 178179 181181 183183 185185 187189 191191 193193 195196 199207 209209 214218 220221 223223 225225 229232 234234 236236 238254	1
DA21-P	MTC100YH2-009	.SHELL-PLUG (VK1010) (USED WITH INSERTS: PRIMARY MTC100YC1-001 SECONDARY MTC100YC1-002)	255257 259276	1
		MISSING ITEM NO. NOT APPLICABLE		

– ITEM NOT ILLUSTRATED

IDENT	PART NUMBER	1234567 NOMENCLATURE	EFFECT FROM TO	UNITS PER ASSY
DA21-R	MTC100YH2-010	.SHELL-RECEPTACLE (VK1010) (USED WITH WAFERS: TYPE A, MTC100KT2-1103 TYPE B, MTC100KT2-1104)	111111 113114 117117 119119 121129 132132 135142 144145 147147 150163 166166 168176 178179 181181 183183 185185 187189 191191 193193 195196 199207 209209 214218 220221 223223 225225 229232 234234 236236 238254	1
DA21-R	MTC100YH2-010	.SHELL-RECEPTACLE (VK1010) (USED WITH INSERTS: PRIMARY MTC100YC1-003 SECONDARY MTC100YC1-004)	255257 259276	1
		MISSING ITEM NO. NOT APPLICABLE		

– ITEM NOT ILLUSTRATED

IDENT	PART NUMBER	1234567 NOMENCLATURE	EFFECT FROM TO	UNITS PER ASSY
DA29-P	MTC100YH1-003	.SHELL-PLUG (VK1010) (USED WITH WAFERS: TYPE A, MTC100KT1-1101 TYPE B, MTC100KT1-1102)	111111 113114 117117 119119 121129 132132 135142 144145 147147 150163 166166 168176 178179 181181 183183 185185 187189 191191 193193 195196 199207 209209 214218 220221 223223 225225 229232 234234 236236 238254	1
DA29-P	MTC100YH1-003	.SHELL-PLUG (VK1010) (USED WITH INSERT: MTC100YC1-005)	255257 259276	1
		MISSING ITEM NO. NOT APPLICABLE		

– ITEM NOT ILLUSTRATED

IDENT	PART NUMBER	1234567 NOMENCLATURE	EFFECT FROM TO	UNITS PER ASSY
DA29-R	MTC100YH1-004	.SHELL-RECEPTACLE (VK1010) (USED WITH WAFERS: TYPE A, MTC100KT1-1103 TYPE B, MTC100KT1-1104)	111111 113114 117117 119119 121129 132132 135142 144145 147147 150163 166166 168176 178179 181181 183183 185185 187189 191191 193193 195196 199207 209209 214218 220221 223223 225225 229232 234234 236236 238254	1
DA29-R	MTC100YH1-004	.SHELL-RECEPTACLE (VK1010) (USED WITH INSERT: MTC100YC1-006)	255257 259276	1
		MISSING ITEM NO. NOT APPLICABLE		

– ITEM NOT ILLUSTRATED

IDENT	PART NUMBER	1234567 NOMENCLATURE	EFFECT FROM TO	UNITS PER ASSY
DA3-P	MTC100YH1-003	.SHELL-PLUG (VK1010) (USED WITH WAFERS: TYPE A, MTC100KT1-1101 TYPE B, MTC100KT1-1102)	111111 113114 117117 119119 121129 132132 135142 144145 147147 150163 166166 168176 178179 181181 183183 185185 187189 191191 193193 195196 199207 209209 214218 220221 223223 225225 229232 234234 236236 238254	1
DA3-P	MTC100YH1-003	.SHELL-PLUG (VK1010) (USED WITH INSERT: MTC100YC1-005)	255257 259276	1
		MISSING ITEM NO. NOT APPLICABLE		

– ITEM NOT ILLUSTRATED

IDENT	PART NUMBER	1234567 NOMENCLATURE	EFFECT FROM TO	UNITS PER ASSY
DA3-R	MTC100YH1-004	.SHELL-RECEPTACLE (VK1010) (USED WITH WAFERS: TYPE A, MTC100KT1-1103 TYPE B, MTC100KT1-1104)	111111 113114 117117 119119 121129 132132 135142 144145 147147 150163 166166 168176 178179 181181 183183 185185 187189 191191 193193 195196 199207 209209 214218 220221 223223 225225 229232 234234 236236 238254	1
DA3-R	MTC100YH1-004	.SHELL-RECEPTACLE (VK1010) (USED WITH INSERT: MTC100YC1-006)	255257 259276	1
		MISSING ITEM NO. NOT APPLICABLE		

– ITEM NOT ILLUSTRATED

IDENT	PART NUMBER	1234567 NOMENCLATURE	EFFECT FROM TO	UNITS PER ASSY
DA4-P	MTC100YH2-009	.SHELL-PLUG (VK1010) (USED WITH WAFERS: TYPE A, MTC100KT2-1101 TYPE B, MTC100KT2-1102)	111111 113114 117117 119119 121129 132132 135142 144145 147147 150163 166166 168176 178179 181181 183183 185185 187189 191191 193193 195196 199207 209209 214218 220221 223223 225225 229232 234234 236236 238254	1
DA4-P	MTC100YH2-009	.SHELL-PLUG (VK1010) (USED WITH INSERTS: PRIMARY MTC100YC1-001 SECONDARY MTC100YC1-002)	255257 259276	1
		MISSING ITEM NO. NOT APPLICABLE		

– ITEM NOT ILLUSTRATED

IDENT	PART NUMBER	1234567 NOMENCLATURE	EFFECT FROM TO	UNITS PER ASSY
DA4-R	MTC100YH2-010	.SHELL-RECEPTACLE (VK1010) (USED WITH WAFERS: TYPE A, MTC100KT2-1103 TYPE B, MTC100KT2-1104)	111111 113114 117117 119119 121129 132132 135142 144145 147147 150163 166166 168176 178179 181181 183183 185185 187189 191191 193193 195196 199207 209209 214218 220221 223223 225225 229232 234234 236236 238254	1
DA4-R	MTC100YH2-010	.SHELL-RECEPTACLE (VK1010) (USED WITH INSERTS: PRIMARY MTC100YC1-003 SECONDARY MTC100YC1-004)	255257 259276	1
DB-GG	CV7313	.DIODE- (VK0004)		1
DC-GG	CV7313	.DIODE- (VK0004)		1
DG	422255-8	.BUNG- (VK1793)		1
DH	422254-9	.BUNG- (VK1793)		1
E-GA	LDG150Y4	.CONTACTOR- (VK4358)		1
E-ZL	BAEREF000003234	.DIODE- (SW06HHN400SUU9096 (VU0544))		1
		MISSING ITEM NO. NOT APPLICABLE		

- ITEM NOT ILLUSTRATED

IDENT	PART NUMBER	1234567 NOMENCLATURE	EFFECT FROM TO	UNITS PER ASSY
EK-CG	2TP1-3	.SWITCH-	111111	1
		(V91929)	113114	
		(OPT (VK6596))		
EK-CG	2TP1-3M	.SWITCH-	117117	1
		(V91929)	119119	
		(OPT (VK6596))	121129	
			132132	
			135142	
			144145	
			147147	
			150163	
			166166	
			168176	
			178179	
			181181	
			183183	
			185185	
			187189	
			191191	
			193193	
			195196	
			199207	
			209209	
			214218	
			220221	
			223223	
			225225	
			229232	
			234234	
			236236	
			238257	
			259276	
EL-CG	2TP1-3	.SWITCH-	111111	1
		(V91929)	113114	
		(OPT (VK6596))		
		MISSING ITEM NO. NOT APPLICABLE		

- ITEM NOT ILLUSTRATED

IDENT	PART NUMBER	1234567 NOMENCLATURE	EFFECT FROM TO	UNITS PER ASSY
EL-CG	2TP1-3M	.SWITCH-	117117	1
		(V91929)	119119	
		(OPT (VK6596))	121129	
			132132	
			135142	
			144145	
			147147	
			150163	
			166166	
			168176	
			178179	
			181181	
			183183	
			185185	
			187189	
			191191	
			193193	
			195196	
			199207	
			209209	
			214218	
			220221	
			223223	
			225225	
			229232	
			234234	
			236236	
			238257	
			259276	
EN-CG	4TP1-10	.SWITCH-	111111	1
		(V91929)	113114	
		(OPT (VK6596))		
		MISSING ITEM NO. NOT APPLICABLE		

– ITEM NOT ILLUSTRATED

IDENT	PART NUMBER	1234567 NOMENCLATURE	EFFECT FROM TO	UNITS PER ASSY
EN-CG	4TP1-10M	.SWITCH-	117117	1
		(V91929)	119119	
		(OPT (VK6596))	121129	
			132132	
			135142	
			144145	
			147147	
			150163	
			166166	
			168176	
			178179	
			181181	
			183183	
			185185	
			187189	
			191191	
			193193	
			195196	
			199207	
			209209	
			214218	
			220221	
			223223	
			225225	
			229232	
			234234	
			236236	
			238257	
			259276	
ES-CG	1TP1-1	.SWITCH-	111111	1
		(V91929)	113114	
		MISSING ITEM NO. NOT APPLICABLE		

– ITEM NOT ILLUSTRATED

IDENT	PART NUMBER	1234567 NOMENCLATURE	EFFECT FROM TO	UNITS PER ASSY
ES-CG	1TP1-1M	.SWITCH- (V91929)	117117 119119 121129 132132 135142 144145 147147 150163 166166 168176 178179 181181 183183 185185 187189 191191 193193 195196 199207 209209 214218 220221 223223 225225 229232 234234 236236 238257 259276	1
F1-GA	5920-99-0120076	.FUSE-5AMP (VK0657)		1
F1-ZL	5920-99-0120076	.FUSE-5AMP (VK0657)		1
F10-ZL	5920-99-0120075	.FUSE-3AMP (VK0657)		1
F11-DAC	5920-99-0120075	.FUSE-3AMP (VK0657)		1
F11-GA	L1330A500	.FUSE-500AMP (VU0154)		1
F12-GA	L133CA150	.FUSE-150AMP (VU0154)		1
F13-GA	UAM100	.FUSE-100AMP (VK0672)		1
F14-DAC	5920-99-0120076	.FUSE-5AMP (VK0657)		1
F14-GA	UAM100	.FUSE-100AMP (VK0672)		1
F15-ZL	5920-99-0120074	.FUSE-2AMP (VK0657)		1
		MISSING ITEM NO. NOT APPLICABLE		

– ITEM NOT ILLUSTRATED

IDENT	PART NUMBER	1234567 NOMENCLATURE	EFFECT FROM TO	UNITS PER ASSY
F16-GA	5920-99-0120075	.FUSE-3AMP (VK0657)		1
F2-ZL	5920-99-0120076	.FUSE-5AMP (VK0657)		1
F21-GA	L1330A500	.FUSE-500AMP (VU0154)		1
F21-ZL	5920-99-0120075	.FUSE-3AMP (VK0657)		1
F22-GA	L133CA150	.FUSE-150AMP (VU0154)		1
F23-GA	UAM100	.FUSE-100AMP (VK0672)		1
F24-GA	UAM100	.FUSE-100AMP (VK0672)		1
F25-ZL	5920-99-0120075	.FUSE-3AMP (VK0657)		1
F26-GA	5920-99-0120075	.FUSE-3AMP (VK0657)		1
F29-GA	5920-99-0120076	.FUSE-5AMP (VK0657)		1
F3-ZL	5920-99-0120076	.FUSE-5AMP (VK0657)		1
F30-ZL	5920-99-0120075	.FUSE-3AMP (VK0657)		1
F31-ZL	UAM100	.FUSE-100AMP (VK0657)		1
F32-ZL	UAM100	.FUSE-100AMP (VK0657)		1
F33-ZL	5920-99-0120075	.FUSE-3AMP (VK0657)		1
F34-ZL	5920-99-0120075	.FUSE-3AMP (VK0657)		1
F35-ZL	5920-99-0120075	.FUSE-3AMP (VK0657)		1
F36-ZL	5920-99-0120075	.FUSE-3AMP (VK0657)		1
F4-ZL	5920-99-0120075	.FUSE-3AMP (VK0657)		1
F55-ZK	5920-99-0120075	.FUSE-3AMP (VK0657)		1
F59-ZK	5920-99-0120075	.FUSE-3AMP (VK0657)		1
F7-ZL	5920-99-0120079	.FUSE-15AMP (VK0657)		1
F8-ZL	5920-99-0120075	.FUSE-3AMP (VK0657)		1
F9-ZL	5920-99-0120075	.FUSE-3AMP (VK0657)		1
G-ZL	1628	.SHUNT- (VK4383)		1
		MISSING ITEM NO. NOT APPLICABLE		

— ITEM NOT ILLUSTRATED

IDENT	PART NUMBER	1234567 NOMENCLATURE	EFFECT FROM TO	UNITS PER ASSY
H-GA	A703ZS	.CONTACTOR- (V74063)		1
H-ZL	1628	.SHUNT- (VK4383)		1
J-GG	HWBUN1146D10B	.TERMINAL BLOCK- (VK0574)		1
J-ZL	A770RSSA	.CONTACTOR- (V74063)		1
JG-DAH	U3626	.VOLTAGE CONTROLLER- (VK0023)		1
JR-CG	2132-01-0012	.INDICATOR-DC VOLTAGE (VU1588)		1
K-ZL	A770RSSA	.CONTACTOR- (V74063)		1
L-ZL	9124-9290	.CONTACTOR- (VK6265)		1
LL-CG	2TP1-70	.SWITCH- (V91929) (OPT (VK6596))	111111 113114	1
LL-CG	2TP1-70M	.SWITCH- (V91929) (OPT (VK6596))	117117 119119 121129 132132 135142 144145 147147 150163 166166 168176 178179 181181 183183 185185 187189 191191 193193 195196 199207 209209 214218 220221 223223 225225 229232 234234 236236 238257 259276	1
LN-CG	WC1503	.SWITCH- (VK0653)		1
		MISSING ITEM NO. NOT APPLICABLE		

– ITEM NOT ILLUSTRATED

IDENT	PART NUMBER	1234567 NOMENCLATURE	EFFECT FROM TO	UNITS PER ASSY
LP-CG	WC1503	.SWITCH- (VK0653)		1
LR-CG	9A60-02-1-6N	.SWITCH- (V81073)		1
M-ZL	9124-9290	.CONTACTOR- (VK6265)		1
M1-DAG	MRTB20E04-111	.TERMINAL JUNCTION MODULE- (V14283)		1
N-ZL	CV7313	.DIODE- (VK0004) (OPT BYX38-600) (OPT BYX48-600) (POST SB24-317)		1
PP	HWBUN1146D10B	.TERMINAL BLOCK- (VK0574)		1
R-ZL	CV7313	.DIODE- (VK0004) (OPT BYX38-600) (OPT BYX48-600) (POST SB24-317)		1
RC-DAB	5905-99-0140445	.RESISTOR- (VK0064)		1
RD-DAB	5905-99-0140302	.RESISTOR- (VK0064)		1
RE-DAB	BAEREF000004352	.RESISTOR- (403CC80R6PM0-5PCT (VK0064))		1
RF-DAB	BAEREF000004352	.RESISTOR- (403CC80R6PM0-5PCT (VK0064))		1
S-ZL	CV7313	.DIODE- (VK0004) (OPT BYX38-600) (OPT BYX48-600) (POST SB24-317)		1
T-GA	LDA150A8	.CONTACTOR- (VK4358)		1
U-ZL	A84MAS	.CONTACTOR- (V74063)	111111 113114 117117 119119 121129 132132 135142 144145 147147	1
		MISSING ITEM NO. NOT APPLICABLE		

– ITEM NOT ILLUSTRATED

IDENT	PART NUMBER	1234567 NOMENCLATURE	EFFECT FROM TO	UNITS PER ASSY
U-ZL	A848MASMODA	.CONTACTOR- (V74063)	150163 166166 168176 178179 181181 183183 185185 187189 191191 193193 195196 199207 209209 214218 220221 223223 225225 229232 234234 236236 238257 259276	1
V-GA	E311TS	.OVERVOLT SENSOR- (V74063)		1
VM	HWBUN1146S10B	.TERMINAL BLOCK- (VK0574)		1
W-GA	CV7313	.DIODE- (VK0004)		1
X13-DAB	MRTB20E04-111	.TERMINAL JUNCTION MODULE- (V14283)		1
X16-DAB	MRTB20E57-111	.TERMINAL JUNCTION MODULE- (V14283)		1
X3-DAB	MRTB20E57-111	.TERMINAL JUNCTION MODULE- (V14283)		1
X4-DAB	MRTB20E57-111	.TERMINAL JUNCTION MODULE- (V14283)		1
Y14-DAB	MRTB20E57-111	.TERMINAL JUNCTION MODULE- (V14283)		1
ZM	9750-0640	.BATTERY- (VU3764)		1
ZN	9750-0640	.BATTERY- (VU3764)		1
ZP	GCB3LV14GB183	.PLUG- (V71468) (OPT (VK0316))		1
		MISSING ITEM NO. NOT APPLICABLE		

– ITEM NOT ILLUSTRATED

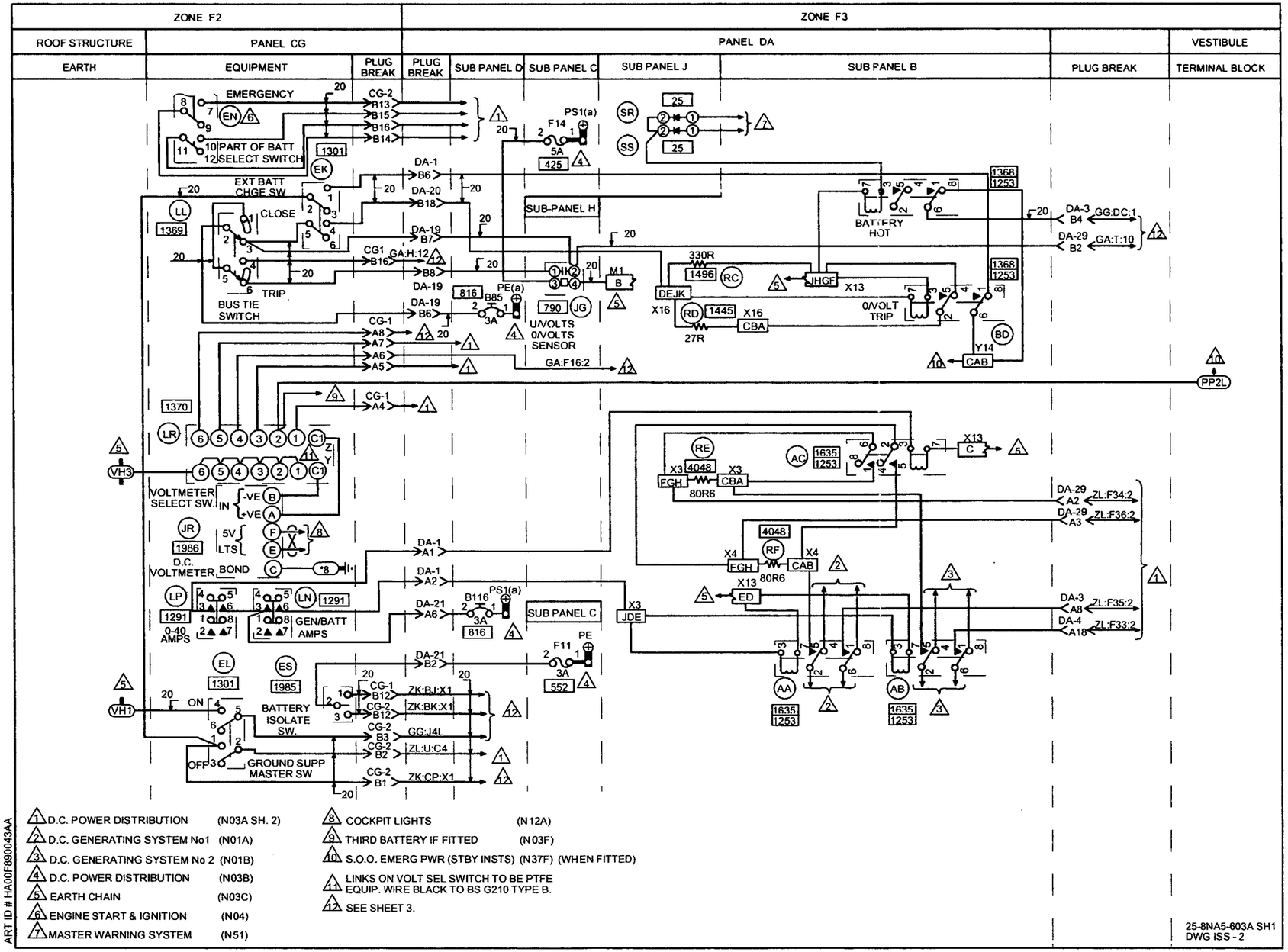
ZONE F2
ZONE F3
ROOF STRUCTURE
PANEL CG
PANEL DA
VESTIBULE
EARTH
EQUIPMENT
PLUG BREAK
SUB PANEL D
SUB PANEL C
SUB PANEL J
SUB PANEL B
TERMINAL BLOCK
EMERGENCY
PART OF BATT SELECT SWITCH
EXT BATT CHGE SW
CLOSE
TRIP
BUS TIE SWITCH
SUB-PANEL H
BATTERY HOT
0/VOLT TRIP
U/VOLTS 0/VOLTS SENSOR
VOLTMETER SELECT SW.
D.C. VOLTMETER
0-40 AMPS
GEN/BATT AMPS
BATTERY ISOLATE SW.
GROUND SUPP MASTER SW
SUB PANEL C
PP2L
1 D.C. POWER DISTRIBUTION (N03A SH. 2)
2 D.C. GENERATING SYSTEM No1 (N01A)
3 D.C. GENERATING SYSTEM No 2 (N01B)
4 D.C. POWER DISTRIBUTION (N03B)
5 EARTH CHAIN (N03C)
6 ENGINE START & IGNITION (N04)
7 MASTER WARNING SYSTEM (N51)
8 COCKPIT LIGHTS (N12A)
9 THIRD BATTERY IF FITTED (N03F)
10 S.O.O. EMERG PWR (STBY INSTS) (N37F) (WHEN FITTED)
11 LINKS ON VOLT SEL SWITCH TO BE PTFE EQUIP. WIRE BLACK TO BS G210 TYPE B.
12 SEE SHEET 3.
ART ID # HA00F890043AA
25-8NA5-603A SH1
DWG ISS - 2

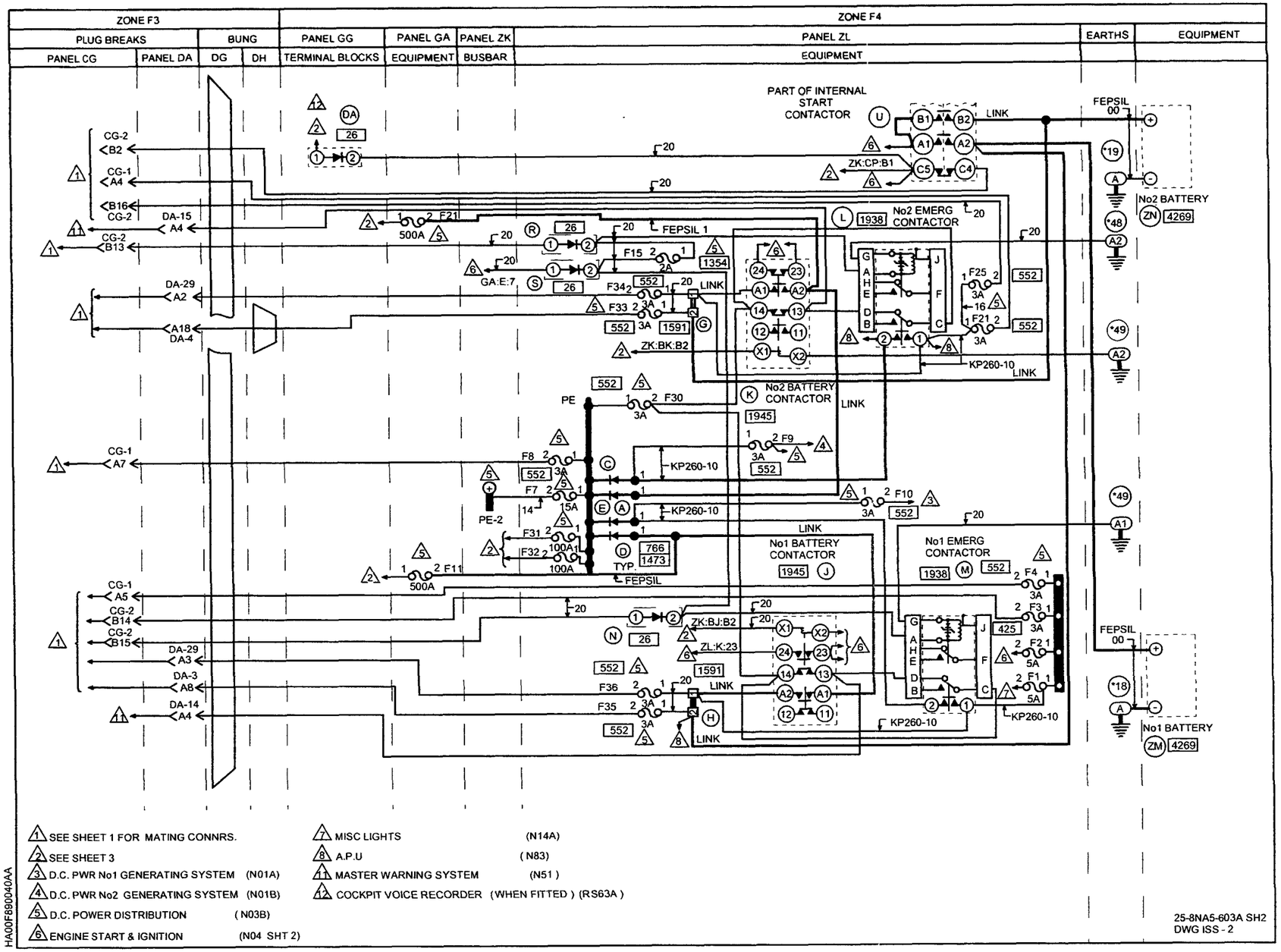
ZONE F3
ZONE F4
PLUG BREAKS
BUNG
PANEL GG
PANEL GA
PANEL ZK
PANEL ZL
EARTHS
EQUIPMENT
PANEL CG
PANEL DA
DG
DH
TERMINAL BLOCKS
EQUIPMENT
BUSBAR
EQUIPMENT
PART OF INTERNAL START CONTACTOR
No2 EMERG CONTACTOR
No2 BATTERY CONTACTOR
No1 BATTERY CONTACTOR
No1 EMERG CONTACTOR
No2 BATTERY
No1 BATTERY
FEPSIL 00
FEPSIL 1
FEPSIL
LINK
KP260-10
ZK:CP:B1
ZK:BK:B2
ZK:BJ:B2
ZL:K:23
GA:E:7
CG-2 B2
CG-1 A4
B16
CG-2 B13
DA-15 A4
DA-29 A2
A18 DA-4
CG-1 A7
CG-1 A5
CG-2 B14
CG-2 B15
DA-29 A3
DA-3 A8
DA-14 A4
PE
PE-2
TYP.
1 SEE SHEET 1 FOR MATING CONNRS.
2 SEE SHEET 3
3 D.C. PWR No1 GENERATING SYSTEM (N01A)
4 D.C. PWR No2 GENERATING SYSTEM (N01B)
5 D.C. POWER DISTRIBUTION (N03B)
6 ENGINE START & IGNITION (N04 SHT 2)
7 MISC LIGHTS (N14A)
8 A.P.U (N83)
11 MASTER WARNING SYSTEM (N51)
12 COCKPIT VOICE RECORDER (WHEN FITTED) (RS63A)
HA00F8900040AA
25-8NA5-603A SH2
DWG ISS - 2

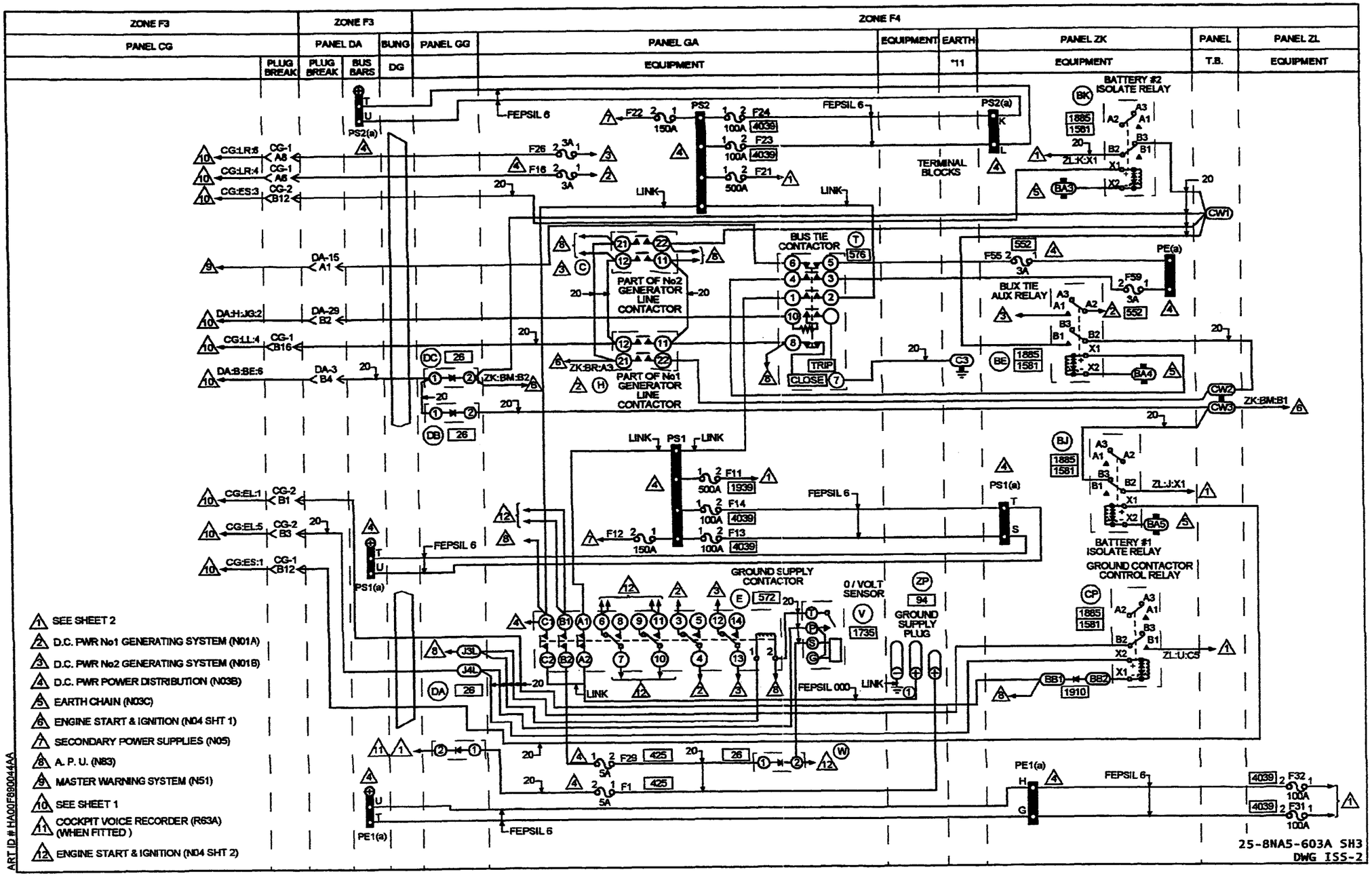
ZONE F3
ZONE F3
ZONE F4
PANEL CG
PANEL DA
BUNG
PANEL GG
PANEL GA
EQUIPMENT
EARTH
PANEL ZK
PANEL
PANEL ZL
PLUG BREAK
PLUG BREAK
BUS BARS
DG
EQUIPMENT
*11
EQUIPMENT
T.B.
EQUIPMENT
BATTERY #2 ISOLATE RELAY
TERMINAL BLOCKS
BUS TIE CONTACTOR
PART OF No2 GENERATOR LINE CONTACTOR
PART OF No1 GENERATOR LINE CONTACTOR
BUS TIE AUX RELAY
BATTERY #1 ISOLATE RELAY
GROUND CONTACTOR CONTROL RELAY
GROUND SUPPLY CONTACTOR
0 / VOLT SENSOR
GROUND SUPPLY PLUG
FEPSIL 6
FEPSIL 000
LINK
1 SEE SHEET 2
2 D.C. PWR No1 GENERATING SYSTEM (N01A)
3 D.C. PWR No2 GENERATING SYSTEM (N01B)
4 D.C. PWR POWER DISTRIBUTION (N03B)
5 EARTH CHAIN (N03C)
6 ENGINE START & IGNITION (N04 SHT 1)
7 SECONDARY POWER SUPPLIES (N05)
8 A. P. U. (N83)
9 MASTER WARNING SYSTEM (N51)
10 SEE SHEET 1
11 COCKPIT VOICE RECORDER (R63A) (WHEN FITTED)
12 ENGINE START & IGNITION (N04 SHT 2)
ART ID # HA00F890044AA
25-8NA5-603A SH3
DWG ISS-2

IDENT	PART NUMBER	1234567 NOMENCLATURE	EFFECT FROM TO	UNITS PER ASSY
		DC POWER DISTRIBUTION	091091 094094 097097 106106 109110 112112 115116 118118 120120 130131 133134 143143 146146 148149 164165 167167 177177 180180 182182 184184 186186 190190 192192 194194 197198 208208 210212 219219 222222 224224 226228 233233 235235 237237 258258	
	25-8NA5-603A	WIRING DIAGRAM- (MODIFIED BY SB24-286-253272A) (MODIFIED BY SB24-285-253273A) (MOD 259404B)		RF
A-ZL	BAEREF000003234	.DIODE- (SW06HHN400SUU9096 (VU0544))		1
AA-DAB	HDS8SF2L03	.RELAY- (VK1793) (USED WITH SOCKET: RSE120074 (V58982))		1
		MISSING ITEM NO. NOT APPLICABLE		

– ITEM NOT ILLUSTRATED

IDENT	PART NUMBER	1234567 NOMENCLATURE	EFFECT FROM TO	UNITS PER ASSY
AB-DAB	HDS8SF2L03	.RELAY- (VK1793) (USED WITH SOCKET: RSE120074 (V58982))		1
AC-DAB	HDS8SF2L03	.RELAY- (VK1793) (USED WITH SOCKET: RSE120074 (V58982))		1
BA-ZK	HWBUN1146S10B	.TERMINAL BLOCK- (VK0574)		1
BB-ZK	HWBUN1146S10B	.TERMINAL BLOCK- (VK0574) (USED WITH DIODE ASSY: 25-7NF1815-5A)		1
BD-DAB	HDS8SF3J03	.RELAY- (VK1793) (USED WITH SOCKET: RSE120074 (V58982))		1
BE-DAB	HDS8SF3J03	.RELAY- (VK1793) (USED WITH SOCKET: RSE120074 (V58982))		1
BE-ZK	M300-1264	.RELAY- (VK6265) (USED WITH SOCKET: M12883-41-16 (V81349))		1
BJ-ZK	M300-1264	.RELAY- (VK6265) (USED WITH SOCKET: M12883-41-16 (V81349))		1
BK-ZK	M300-1264	.RELAY- (VK6265) (USED WITH SOCKET: M12883-41-16 (V81349))		1
B116-DAD	483TCG11J25-3A	.CIRCUIT BREAKER-3AMP (VU0091)		1
B85-DAD	483TCG11J25-3A	.CIRCUIT BREAKER-3AMP (VU0091)		1
C-GA	A703ZS	.CONTACTOR- (V74063)		1
C-ZL	BAEREF000003234	.DIODE- (SW06HHN400SUU9096 (VU0544))		1
		MISSING ITEM NO. NOT APPLICABLE		

– ITEM NOT ILLUSTRATED

IDENT	PART NUMBER	1234567 NOMENCLATURE	EFFECT FROM TO	UNITS PER ASSY
CG1-P	MTC100YH2-009	.SHELL-PLUG (VK1010) (USED WITH WAFERS: TYPE A, MTC100KT2-1101 TYPE B, MTC100KT2-1102)	091091 094094 097097 106106 109110 112112 115116 118118 120120 130131 133134 143143 146146 148149 164165 167167 177177 180180 182182 184184 186186 190190 192192 194194 197198 208208 210212 219219 222222 224224 226228 233233 235235 237237	1
CG1-P	MTC100YH2-009	.SHELL-PLUG (VK1010) (USED WITH INSERTS: PRIMARY MTC100YC1-001 SECONDARY MTC100YC1-002)	258258	1
		MISSING ITEM NO. NOT APPLICABLE		

— ITEM NOT ILLUSTRATED

IDENT	PART NUMBER	1234567 NOMENCLATURE	EFFECT FROM TO	UNITS PER ASSY
CG1-R	MTC100YH2-010	.SHELL-RECEPTACLE (VK1010) (USED WITH WAFERS: TYPE A, MTC100KT2-1103 TYPE B, MTC100KT2-1104)	091091 094094 097097 106106 109110 112112 115116 118118 120120 130131 133134 143143 146146 148149 164165 167167 177177 180180 182182 184184 186186 190190 192192 194194 197198 208208 210212 219219 222222 224224 226228 233233 235235 237237	1
CG1-R	MTC100YH2-010	.SHELL-RECEPTACLE (VK1010) (USED WITH INSERTS: PRIMARY MTC100YC1-003 SECONDARY MTC100YC1-004)	258258	1
		MISSING ITEM NO. NOT APPLICABLE		

– ITEM NOT ILLUSTRATED

IDENT	PART NUMBER	1234567 NOMENCLATURE	EFFECT FROM TO	UNITS PER ASSY
CG2-P	MTC100YH2-009	.SHELL-PLUG (VK1010) (USED WITH WAFERS: TYPE A, MTC100KT2-1101 TYPE B, MTC100KT2-1102)	091091 094094 097097 106106 109110 112112 115116 118118 120120 130131 133134 143143 146146 148149 164165 167167 177177 180180 182182 184184 186186 190190 192192 194194 197198 208208 210212 219219 222222 224224 226228 233233 235235 237237	1
CG2-P	MTC100YH2-009	.SHELL-PLUG (VK1010) (USED WITH INSERTS: PRIMARY MTC100YC1-001 SECONDARY MTC100YC1-002)	258258	1
		MISSING ITEM NO. NOT APPLICABLE		

– ITEM NOT ILLUSTRATED

IDENT	PART NUMBER	1234567 NOMENCLATURE	EFFECT FROM TO	UNITS PER ASSY
CG2-R	MTC100YH2-010	.SHELL-RECEPTACLE (VK1010) (USED WITH WAFERS: TYPE A, MTC100KT2-1103 TYPE B, MTC100KT2-1104)	091091 094094 097097 106106 109110 112112 115116 118118 120120 130131 133134 143143 146146 148149 164165 167167 177177 180180 182182 184184 186186 190190 192192 194194 197198 208208 210212 219219 222222 224224 226228 233233 235235 237237	1
CG2-R	MTC100YH2-010	.SHELL-RECEPTACLE (VK1010) (USED WITH INSERTS: PRIMARY MTC100YC1-003 SECONDARY MTC100YC1-004)	258258	1
CP-ZK	M300-1264	.RELAY- (VK6265) (USED WITH SOCKET: M12883-41-16 (V81349))		1
CW-ZK	HWBUN1146S10B	.TERMINAL BLOCK- (VK0574)		1
D-ZL	BAEREF000003234	.DIODE- (SW06HHN400SUU9096 (VU0544))		1

MISSING ITEM NO. NOT APPLICABLE

– ITEM NOT ILLUSTRATED

IDENT	PART NUMBER	1234567 NOMENCLATURE	EFFECT FROM TO	UNITS PER ASSY
DA-GG	CV7313	.DIODE- (VK0004)		1
DA1-P	MTC100YH1-003	.SHELL-PLUG (VK1010) (USED WITH WAFERS: TYPE A, MTC100KT1-1101 TYPE B, MTC100KT1-1102)	091091 094094 097097 106106 109110 112112 115116 118118 120120 130131 133134 143143 146146 148149 164165 167167 177177 180180 182182 184184 186186 190190 192192 194194 197198 208208 210212 219219 222222 224224 226228 233233 235235 237237	1
DA1-P	MTC100YH1-003	.SHELL-PLUG (VK1010) (USED WITH INSERT: MTC100YC1-005)	258258	1
		MISSING ITEM NO. NOT APPLICABLE		

– ITEM NOT ILLUSTRATED

IDENT	PART NUMBER	1234567 NOMENCLATURE	EFFECT FROM TO	UNITS PER ASSY
DA1-R	MTC100YH1-004	.SHELL-RECEPTACLE (VK1010) (USED WITH WAFERS: TYPE A, MTC100KT1-1103 TYPE B, MTC100KT1-1104)	091091 094094 097097 106106 109110 112112 115116 118118 120120 130131 133134 143143 146146 148149 164165 167167 177177 180180 182182 184184 186186 190190 192192 194194 197198 208208 210212 219219 222222 224224 226228 233233 235235 237237	1
DA1-R	MTC100YH1-004	.SHELL-RECEPTACLE (VK1010) (USED WITH INSERT: MTC100YC1-006)	258258	1
		MISSING ITEM NO. NOT APPLICABLE		

– ITEM NOT ILLUSTRATED

IDENT	PART NUMBER	1234567 NOMENCLATURE	EFFECT FROM TO	UNITS PER ASSY
DA14-P	MTC100YH1-003	.SHELL-PLUG (VK1010) (USED WITH WAFERS: TYPE A, MTC100KT1-1101 TYPE B, MTC100KT1-1102)	091091 094094 097097 106106 109110 112112 115116 118118 120120 130131 133134 143143 146146 148149 164165 167167 177177 180180 182182 184184 186186 190190 192192 194194 197198 208208 210212 219219 222222 224224 226228 233233 235235 237237	1
DA14-P	MTC100YH1-003	.SHELL-PLUG (VK1010) (USED WITH INSERT: MTC100YC1-005)	258258	1
		MISSING ITEM NO. NOT APPLICABLE		

– ITEM NOT ILLUSTRATED

IDENT	PART NUMBER	1234567 NOMENCLATURE	EFFECT FROM TO	UNITS PER ASSY
DA14-R	MTC100YH1-004	.SHELL-RECEPTACLE (VK1010) (USED WITH WAFERS: TYPE A, MTC100KT1-1103 TYPE B, MTC100KT1-1104)	091091 094094 097097 106106 109110 112112 115116 118118 120120 130131 133134 143143 146146 148149 164165 167167 177177 180180 182182 184184 186186 190190 192192 194194 197198 208208 210212 219219 222222 224224 226228 233233 235235 237237	1
DA14-R	MTC100YH1-004	.SHELL-RECEPTACLE (VK1010) (USED WITH INSERT: MTC100YC1-006)	258258	1
		MISSING ITEM NO. NOT APPLICABLE		

– ITEM NOT ILLUSTRATED

IDENT	PART NUMBER	1234567 NOMENCLATURE	EFFECT FROM TO	UNITS PER ASSY
DA15-P	MTC100YH1-003	.SHELL-PLUG (VK1010) (USED WITH WAFERS: TYPE A, MTC100KT1-1101 TYPE B, MTC100KT1-1102)	091091 094094 097097 106106 109110 112112 115116 118118 120120 130131 133134 143143 146146 148149 164165 167167 177177 180180 182182 184184 186186 190190 192192 194194 197198 208208 210212 219219 222222 224224 226228 233233 235235 237237	1
DA15-P	MTC100YH1-003	.SHELL-PLUG (VK1010) (USED WITH INSERT: MTC100YC1-005)	258258	1
		MISSING ITEM NO. NOT APPLICABLE		

– ITEM NOT ILLUSTRATED

IDENT	PART NUMBER	1234567 NOMENCLATURE	EFFECT FROM TO	UNITS PER ASSY
DA15-R	MTC100YH1-004	.SHELL-RECEPTACLE (VK1010) (USED WITH WAFERS: TYPE A, MTC100KT1-1103 TYPE B, MTC100KT1-1104)	091091 094094 097097 106106 109110 112112 115116 118118 120120 130131 133134 143143 146146 148149 164165 167167 177177 180180 182182 184184 186186 190190 192192 194194 197198 208208 210212 219219 222222 224224 226228 233233 235235 237237	1
DA15-R	MTC100YH1-004	.SHELL-RECEPTACLE (VK1010) (USED WITH INSERT: MTC100YC1-006)	258258	1
		MISSING ITEM NO. NOT APPLICABLE		

– ITEM NOT ILLUSTRATED

IDENT	PART NUMBER	1234567 NOMENCLATURE	EFFECT FROM TO	UNITS PER ASSY
DA19-P	MTC100YH2-009	.SHELL-PLUG (VK1010) (USED WITH WAFERS: TYPE A, MTC100KT2-1101 TYPE B, MTC100KT2-1102)	091091 094094 097097 106106 109110 112112 115116 118118 120120 130131 133134 143143 146146 148149 164165 167167 177177 180180 182182 184184 186186 190190 192192 194194 197198 208208 210212 219219 222222 224224 226228 233233 235235 237237	1
DA19-P	MTC100YH2-009	.SHELL-PLUG (VK1010) (USED WITH INSERTS: PRIMARY MTC100YC1-001 SECONDARY MTC100YC1-002)	258258	1
		MISSING ITEM NO. NOT APPLICABLE		

— ITEM NOT ILLUSTRATED

IDENT	PART NUMBER	1234567 NOMENCLATURE	EFFECT FROM TO	UNITS PER ASSY
DA19-R	MTC100YH2-010	.SHELL-RECEPTACLE (VK1010) (USED WITH WAFERS: TYPE A, MTC100KT2-1103 TYPE B, MTC100KT2-1104)	091091 094094 097097 106106 109110 112112 115116 118118 120120 130131 133134 143143 146146 148149 164165 167167 177177 180180 182182 184184 186186 190190 192192 194194 197198 208208 210212 219219 222222 224224 226228 233233 235235 237237	1
DA19-R	MTC100YH2-010	.SHELL-RECEPTACLE (VK1010) (USED WITH INSERTS: PRIMARY MTC100YC1-003 SECONDARY MTC100YC1-004)	258258	1
		MISSING ITEM NO. NOT APPLICABLE		

– ITEM NOT ILLUSTRATED

IDENT	PART NUMBER	1234567 NOMENCLATURE	EFFECT FROM TO	UNITS PER ASSY
DA20-P	MTC100YH2-009	.SHELL-PLUG (VK1010) (USED WITH WAFERS: TYPE A, MTC100KT2-1101 TYPE B, MTC100KT2-1102)	091091 094094 097097 106106 109110 112112 115116 118118 120120 130131 133134 143143 146146 148149 164165 167167 177177 180180 182182 184184 186186 190190 192192 194194 197198 208208 210212 219219 222222 224224 226228 233233 235235 237237	1
DA20-P	MTC100YH2-009	.SHELL-PLUG (VK1010) (USED WITH INSERTS: PRIMARY MTC100YC1-001 SECONDARY MTC100YC1-002)	258258	1
		MISSING ITEM NO. NOT APPLICABLE		

– ITEM NOT ILLUSTRATED

IDENT	PART NUMBER	1234567 NOMENCLATURE	EFFECT FROM TO	UNITS PER ASSY
DA20-R	MTC100YH2-010	.SHELL-RECEPTACLE (VK1010) (USED WITH WAFERS: TYPE A, MTC100KT2-1103 TYPE B, MTC100KT2-1104)	091091 094094 097097 106106 109110 112112 115116 118118 120120 130131 133134 143143 146146 148149 164165 167167 177177 180180 182182 184184 186186 190190 192192 194194 197198 208208 210212 219219 222222 224224 226228 233233 235235 237237	1
DA20-R	MTC100YH2-010	.SHELL-RECEPTACLE (VK1010) (USED WITH INSERTS: PRIMARY MTC100YC1-003 SECONDARY MTC100YC1-004)	258258	1
		MISSING ITEM NO. NOT APPLICABLE		

– ITEM NOT ILLUSTRATED

IDENT	PART NUMBER	1234567 NOMENCLATURE	EFFECT FROM TO	UNITS PER ASSY
DA21-P	MTC100YH2-009	.SHELL-PLUG (VK1010) (USED WITH WAFERS: TYPE A, MTC100KT2-1101 TYPE B, MTC100KT2-1102)	091091 094094 097097 106106 109110 112112 115116 118118 120120 130131 133134 143143 146146 148149 164165 167167 177177 180180 182182 184184 186186 190190 192192 194194 197198 208208 210212 219219 222222 224224 226228 233233 235235 237237	1
DA21-P	MTC100YH2-009	.SHELL-PLUG (VK1010) (USED WITH INSERTS: PRIMARY MTC100YC1-001 SECONDARY MTC100YC1-002)	258258	1
		MISSING ITEM NO. NOT APPLICABLE		

– ITEM NOT ILLUSTRATED

IDENT	PART NUMBER	1234567 NOMENCLATURE	EFFECT FROM TO	UNITS PER ASSY
DA21-R	MTC100YH2-010	.SHELL-RECEPTACLE (VK1010) (USED WITH WAFERS: TYPE A, MTC100KT2-1103 TYPE B, MTC100KT2-1104)	091091 094094 097097 106106 109110 112112 115116 118118 120120 130131 133134 143143 146146 148149 164165 167167 177177 180180 182182 184184 186186 190190 192192 194194 197198 208208 210212 219219 222222 224224 226228 233233 235235 237237	1
DA21-R	MTC100YH2-010	.SHELL-RECEPTACLE (VK1010) (USED WITH INSERTS: PRIMARY MTC100YC1-003 SECONDARY MTC100YC1-004)	258258	1
		MISSING ITEM NO. NOT APPLICABLE		

– ITEM NOT ILLUSTRATED

IDENT	PART NUMBER	1234567 NOMENCLATURE	EFFECT FROM TO	UNITS PER ASSY
DA29-P	MTC100YH1-003	.SHELL-PLUG (VK1010) (USED WITH WAFERS: TYPE A, MTC100KT1-1101 TYPE B, MTC100KT1-1102)	091091 094094 097097 106106 109110 112112 115116 118118 120120 130131 133134 143143 146146 148149 164165 167167 177177 180180 182182 184184 186186 190190 192192 194194 197198 208208 210212 219219 222222 224224 226228 233233 235235 237237	1
DA29-P	MTC100YH1-003	.SHELL-PLUG (VK1010) (USED WITH INSERT: MTC100YC1-005)	258258	1
		MISSING ITEM NO. NOT APPLICABLE		

– ITEM NOT ILLUSTRATED

IDENT	PART NUMBER	1234567 NOMENCLATURE	EFFECT FROM TO	UNITS PER ASSY
DA29-R	MTC100YH1-004	.SHELL-RECEPTACLE (VK1010) (USED WITH WAFERS: TYPE A, MTC100KT1-1103 TYPE B, MTC100KT1-1104)	091091 094094 097097 106106 109110 112112 115116 118118 120120 130131 133134 143143 146146 148149 164165 167167 177177 180180 182182 184184 186186 190190 192192 194194 197198 208208 210212 219219 222222 224224 226228 233233 235235 237237	1
DA29-R	MTC100YH1-004	.SHELL-RECEPTACLE (VK1010) (USED WITH INSERT: MTC100YC1-006)	258258	1
		MISSING ITEM NO. NOT APPLICABLE		

– ITEM NOT ILLUSTRATED

IDENT	PART NUMBER	1234567 NOMENCLATURE	EFFECT FROM TO	UNITS PER ASSY
DA3-P	MTC100YH1-003	.SHELL-PLUG (VK1010) (USED WITH WAFERS: TYPE A, MTC100KT1-1101 TYPE B, MTC100KT1-1102)	091091 094094 097097 106106 109110 112112 115116 118118 120120 130131 133134 143143 146146 148149 164165 167167 177177 180180 182182 184184 186186 190190 192192 194194 197198 208208 210212 219219 222222 224224 226228 233233 235235 237237	1
DA3-P	MTC100YH1-003	.SHELL-PLUG (VK1010) (USED WITH INSERT: MTC100YC1-005)	258258	1
		MISSING ITEM NO. NOT APPLICABLE		

– ITEM NOT ILLUSTRATED

IDENT	PART NUMBER	1234567 NOMENCLATURE	EFFECT FROM TO	UNITS PER ASSY
DA3-R	MTC100YH1-004	.SHELL-RECEPTACLE (VK1010) (USED WITH WAFERS: TYPE A, MTC100KT1-1103 TYPE B, MTC100KT1-1104)	091091 094094 097097 106106 109110 112112 115116 118118 120120 130131 133134 143143 146146 148149 164165 167167 177177 180180 182182 184184 186186 190190 192192 194194 197198 208208 210212 219219 222222 224224 226228 233233 235235 237237	1
DA3-R	MTC100YH1-004	.SHELL-RECEPTACLE (VK1010) (USED WITH INSERT: MTC100YC1-006)	258258	1
		MISSING ITEM NO. NOT APPLICABLE		

– ITEM NOT ILLUSTRATED

IDENT	PART NUMBER	1234567 NOMENCLATURE	EFFECT FROM TO	UNITS PER ASSY
DA4-P	MTC100YH2-009	.SHELL-PLUG (VK1010) (USED WITH WAFERS: TYPE A, MTC100KT2-1101 TYPE B, MTC100KT2-1102)	091091 094094 097097 106106 109110 112112 115116 118118 120120 130131 133134 143143 146146 148149 164165 167167 177177 180180 182182 184184 186186 190190 192192 194194 197198 208208 210212 219219 222222 224224 226228 233233 235235 237237	1
DA4-P	MTC100YH2-009	.SHELL-PLUG (VK1010) (USED WITH INSERTS: PRIMARY MTC100YC1-001 SECONDARY MTC100YC1-002)	258258	1
		MISSING ITEM NO. NOT APPLICABLE		

– ITEM NOT ILLUSTRATED

IDENT	PART NUMBER	1234567 NOMENCLATURE	EFFECT FROM TO	UNITS PER ASSY
DA4-R	MTC100YH2-010	.SHELL-RECEPTACLE (VK1010) (USED WITH WAFERS: TYPE A, MTC100KT2-1103 TYPE B, MTC100KT2-1104)	091091 094094 097097 106106 109110 112112 115116 118118 120120 130131 133134 143143 146146 148149 164165 167167 177177 180180 182182 184184 186186 190190 192192 194194 197198 208208 210212 219219 222222 224224 226228 233233 235235 237237	1
DA4-R	MTC100YH2-010	.SHELL-RECEPTACLE (VK1010) (USED WITH INSERTS: PRIMARY MTC100YC1-003 SECONDARY MTC100YC1-004)	258258	1
DB-GG	CV7313	.DIODE- (VK0004)		1
DC-GG	CV7313	.DIODE- (VK0004)		1
DG	422255-8	.BUNG- (VK1793)		1
DH	422254-9	.BUNG- (VK1793)		1
E-GA	LDG150Y4	.CONTACTOR- (VK4358)		1
		MISSING ITEM NO. NOT APPLICABLE		

– ITEM NOT ILLUSTRATED

IDENT	PART NUMBER	1234567 NOMENCLATURE	EFFECT FROM TO	UNITS PER ASSY
E-ZL	BAEREF000003234	.DIODE- (SW06HHN400SUU9096 (VU0544))		1
EK-CG	2TP1-3	.SWITCH- (V91929) (OPT (VK6596))	091091 094094 097097 106106 109110 112112 115116	1
EK-CG	2TP1-3M	.SWITCH- (V91929) (OPT (VK6596))	118118 120120 130131 133134 143143 146146 148149 164165 167167 177177 180180 182182 184184 186186 190190 192192 194194 197198 208208 210212 219219 222222 224224 226228 233233 235235 237237 258258	1
EL-CG	2TP1-3	.SWITCH- (V91929) (OPT (VK6596))	091091 094094 097097 106106 109110 112112 115116	1

MISSING ITEM NO. NOT APPLICABLE

– ITEM NOT ILLUSTRATED

IDENT	PART NUMBER	1234567 NOMENCLATURE	EFFECT FROM TO	UNITS PER ASSY
EL-CG	2TP1-3M	.SWITCH-	118118	1
		(V91929)	120120	
		(OPT (VK6596))	130131	
			133134	
			143143	
			146146	
			148149	
			164165	
			167167	
			177177	
			180180	
			182182	
			184184	
			186186	
			190190	
			192192	
			194194	
			197198	
			208208	
			210212	
			219219	
			222222	
			224224	
			226228	
			233233	
			235235	
			237237	
			258258	
EN-CG	4TP1-10	.SWITCH-	091091	1
		(V91929)	094094	
		(OPT (VK6596))	097097	
			106106	
			109110	
			112112	
			115116	
		MISSING ITEM NO. NOT APPLICABLE		

– ITEM NOT ILLUSTRATED

IDENT	PART NUMBER	1234567 NOMENCLATURE	EFFECT FROM TO	UNITS PER ASSY
EN-CG	4TP1-10M	.SWITCH-	118118	1
		(V91929)	120120	
		(DPT (VK6596))	130131	
			133134	
			143143	
			146146	
			148149	
			164165	
			167167	
			177177	
			180180	
			182182	
			184184	
			186186	
			190190	
			192192	
			194194	
			197198	
			208208	
			210212	
			219219	
			222222	
			224224	
			226228	
			233233	
			235235	
			237237	
			258258	
ES-CG	1TP1-1	.SWITCH-	091091	1
		(V91929)	094094	
			097097	
			106106	
			109110	
			112112	
			115116	
		MISSING ITEM NO. NOT APPLICABLE		

– ITEM NOT ILLUSTRATED

IDENT	PART NUMBER	1234567 NOMENCLATURE	EFFECT FROM TO	UNITS PER ASSY
ES-CG	1TP1-1M	.SWITCH- (V91929)	118118 120120 130131 133134 143143 146146 148149 164165 167167 177177 180180 182182 184184 186186 190190 192192 194194 197198 208208 210212 219219 222222 224224 226228 233233 235235 237237 258258	1
F1-GA	5920-99-0120076	.FUSE-5AMP (VK0657)		1
F1-ZL	5920-99-0120076	.FUSE-5AMP (VK0657)		1
F10-ZL	5920-99-0120075	.FUSE-3AMP (VK0657)		1
F11-DAC	5920-99-0120075	.FUSE-3AMP (VK0657)		1
F11-GA	L1330A500	.FUSE-500AMP (VU0154)		1
F12-GA	L133CA150	.FUSE-150AMP (VU0154)		1
F13-GA	UAM100	.FUSE-100AMP (VK0672)		1
F14-DAC	5920-99-0120076	.FUSE-5AMP (VK0657)		1
F14-GA	UAM100	.FUSE-100AMP (VK0672)		1
F15-ZL	5920-99-0120074	.FUSE-2AMP (VK0657)		1
F16-GA	5920-99-0120075	.FUSE-3AMP (VK0657)		1
		MISSING ITEM NO. NOT APPLICABLE		

– ITEM NOT ILLUSTRATED

IDENT	PART NUMBER	1234567 NOMENCLATURE	EFFECT FROM TO	UNITS PER ASSY
F2-ZL	5920-99-0120076	.FUSE-5AMP (VK0657)		1
F21-GA	L1330A500	.FUSE-500AMP (VU0154)		1
F21-ZL	5920-99-0120075	.FUSE-3AMP (VK0657)		1
F22-GA	L133CA150	.FUSE-150AMP (VU0154)		1
F23-GA	UAM100	.FUSE-100AMP (VK0672)		1
F24-GA	UAM100	.FUSE-100AMP (VK0672)		1
F25-ZL	5920-99-0120075	.FUSE-3AMP (VK0657)		1
F26-GA	5920-99-0120075	.FUSE-3AMP (VK0657)		1
F29-GA	5920-99-0120076	.FUSE-5AMP (VK0657)		1
F3-ZL	5920-99-0120076	.FUSE-5AMP (VK0657)		1
F30-ZL	5920-99-0120075	.FUSE-3AMP (VK0657)		1
F31-ZL	UAM100	.FUSE-100AMP (VK0657)		1
F32-ZL	UAM100	.FUSE-100AMP (VK0657)		1
F33-ZL	5920-99-0120075	.FUSE-3AMP (VK0657)		1
F34-ZL	5920-99-0120075	.FUSE-3AMP (VK0657)		1
F35-ZL	5920-99-0120075	.FUSE-3AMP (VK0657)		1
F36-ZL	5920-99-0120075	.FUSE-3AMP (VK0657)		1
F4-ZL	5920-99-0120075	.FUSE-3AMP (VK0657)		1
F55-ZK	5920-99-0120075	.FUSE-3AMP (VK0657)		1
F59-ZK	5920-99-0120075	.FUSE-3AMP (VK0657)		1
F7-ZL	5920-99-0120079	.FUSE-15AMP (VK0657)		1
F8-ZL	5920-99-0120075	.FUSE-3AMP (VK0657)		1
F9-ZL	5920-99-0120075	.FUSE-3AMP (VK0657)		1
G-ZL	1628	.SHUNT- (VK4383)		1
H-GA	A703ZS	.CONTACTOR- (V74063)		1
		MISSING ITEM NO. NOT APPLICABLE		

– ITEM NOT ILLUSTRATED

IDENT	PART NUMBER	1234567 NOMENCLATURE	EFFECT FROM TO	UNITS PER ASSY
H-ZL	1628	.SHUNT- (VK4383)		1
J-GG	HWBUN1146D10B	.TERMINAL BLOCK- (VK0574)		1
J-ZL	A770RSSA	.CONTACTOR- (V74063)		1
JG-DAH	U3626	.VOLTAGE CONTROLLER- (VK0023)		1
JR-CG	2132-01-0012	.INDICATOR-DC VOLTAGE (VU1588)		1
K-ZL	A770RSSA	.CONTACTOR- (V74063)		1
L-ZL	9124-9290	.CONTACTOR- (VK6265)		1
LL-CG	2TP1-70	.SWITCH- (V91929) (OPT (VK6596))	091091 094094 097097 106106 109110 112112 115116	1
LL-CG	2TP1-70M	.SWITCH- (V91929) (OPT (VK6596))	118118 120120 130131 133134 143143 146146 148149 164165 167167 177177 180180 182182 184184 186186 190190 192192 194194 197198 208208 210212 219219 222222 224224 226228 233233 235235 237237 258258	1
		MISSING ITEM NO. NOT APPLICABLE		

– ITEM NOT ILLUSTRATED

IDENT	PART NUMBER	1234567 NOMENCLATURE	EFFECT FROM TO	UNITS PER ASSY
LN-CG	WC1503	.SWITCH- (VK0653)		1
LP-CG	WC1503	.SWITCH- (VK0653)		1
LR-CG	9A60-02-1-6N	.SWITCH- (V81073)		1
M-ZL	9124-9290	.CONTACTOR- (VK6265)		1
N-ZL	CV7313	.DIODE- (VK0004) (OPT BYX38-600) (OPT BYX48-600) (POST SB24-317)		1
PP	HWBUN1146D10B	.TERMINAL BLOCK- (VK0574)		1
R-ZL	CV7313	.DIODE- (VK0004) (OPT BYX38-600) (OPT BYX48-600) (POST SB24-317)		1
RC-DAB	5905-99-0140445	.RESISTOR- (VK0064)		1
RD-DAB	5905-99-0140302	.RESISTOR- (VK0064)		1
RE-DAB	BAEREF000004352	.RESISTOR- (403CC80R6PM0-5PCT (VK0064))		1
RF-DAB	BAEREF000004352	.RESISTOR- (403CC80R6PM0-5PCT (VK0064))		1
S-ZL	CV7313	.DIODE- (VK0004) (OPT BYX38-600) (OPT BYX48-600) (POST SB24-317)		1
SR-DAJ	CV7313	.DIODE- (VK0004)		1
SS-DAJ	CV7313	.DIODE- (VK0004)		1
T-GA	LDA150A8	.CONTACTOR- (VK4358)		1
U-ZL	A84MAS	.CONTACTOR- (V74063)	091091 094094 097097 106106 110110 115116 118118 130131 133134	1
		MISSING ITEM NO. NOT APPLICABLE		

– ITEM NOT ILLUSTRATED

IDENT	PART NUMBER	1234567 NOMENCLATURE	EFFECT FROM TO	UNITS PER ASSY
U-ZL	A848MASMODA	.CONTACTOR- (V74063)	109109 112112 120120 143143 146146 148149 164165 167167 177177 180180 182182 184184 186186 190190 192192 194194 197198 208208 210212 219219 222222 224224 226228 233233 235235 237237 258258	1
V-GA	E311TS	.OVERVOLT SENSOR- (V74063)		1
VM	HWBUN1146S10B	.TERMINAL BLOCK- (VK0574)		1
W-GA	CV7313	.DIODE- (VK0004)		1
X13-DAB	MRTB20E04-111	.TERMINAL JUNCTION MODULE- (V14283)		1
X16-DAB	MRTB20E57-111	.TERMINAL JUNCTION MODULE- (V14283)		1
X3-DAB	MRTB20E57-111	.TERMINAL JUNCTION MODULE- (V14283)		1
X4-DAB	MRTB20E57-111	.TERMINAL JUNCTION MODULE- (V14283)		1
Y14-DAB	MRTB20E57-111	.TERMINAL JUNCTION MODULE- (V14283)		1
ZM	9750-0640	.BATTERY- (VU3764)		1
ZN	9750-0640	.BATTERY- (VU3764)		1
ZP	GCB3LV14GB183	.PLUG- (V71468) (OPT (VK0316))		1
		MISSING ITEM NO. NOT APPLICABLE		

– ITEM NOT ILLUSTRATED

ZONE F3

PANEL DA

SUB PANEL D

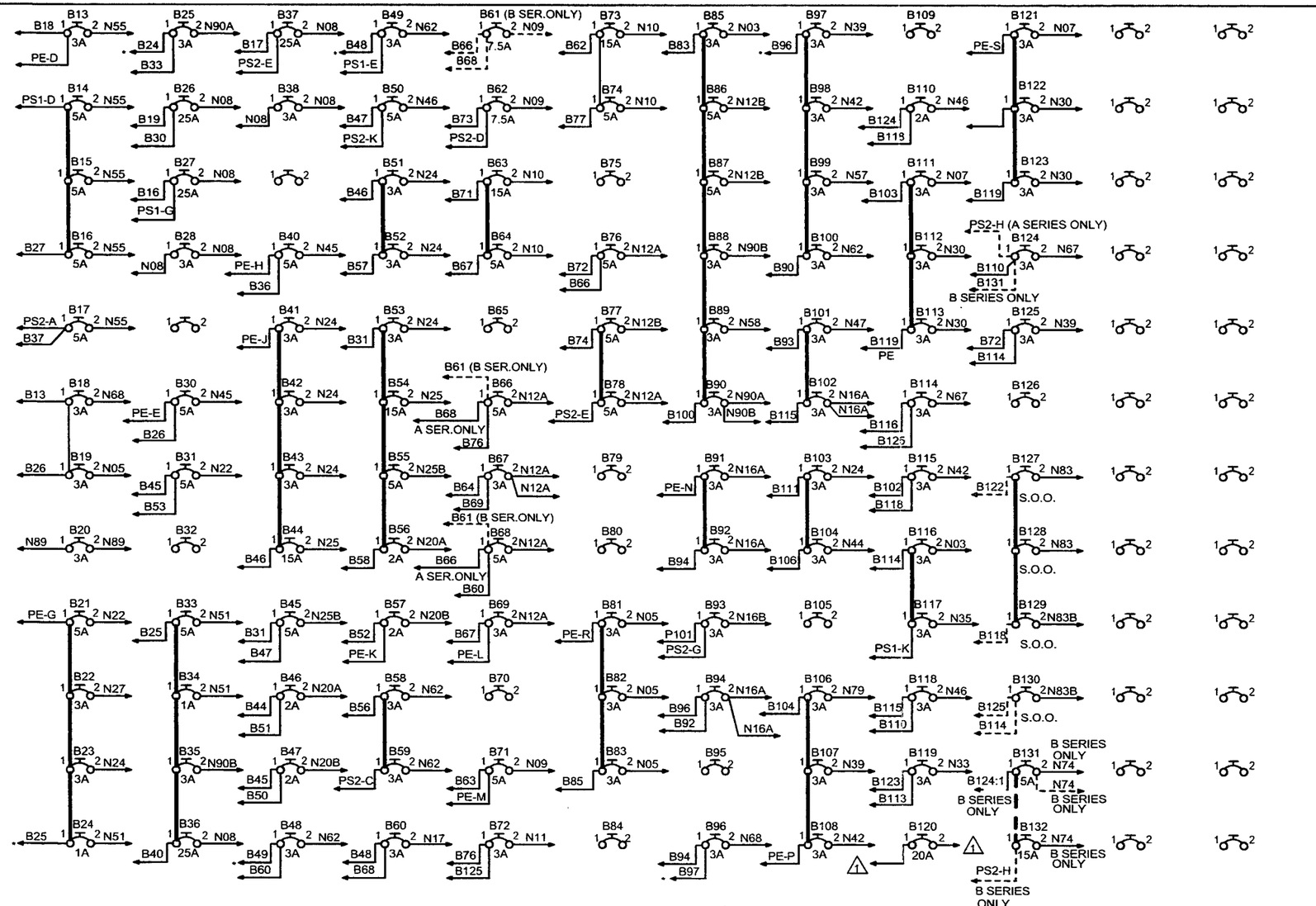

1. SYMBOL * DENOTES A SOLID LINK CONNECTION BETWEEN CIRCUIT BREAKERS EVEN THOUGH AN ARROW IS SHOWN.

2. ALL CIRCUIT BREAKER WIRE LINKS ARE TO BE SIZE 10 KP260 ANA TO SPEC S3200.

1 SEE SHEET 2

25-8NA5-703B SH1
DWG ISS - 6

ART ID # HA00F890048AA

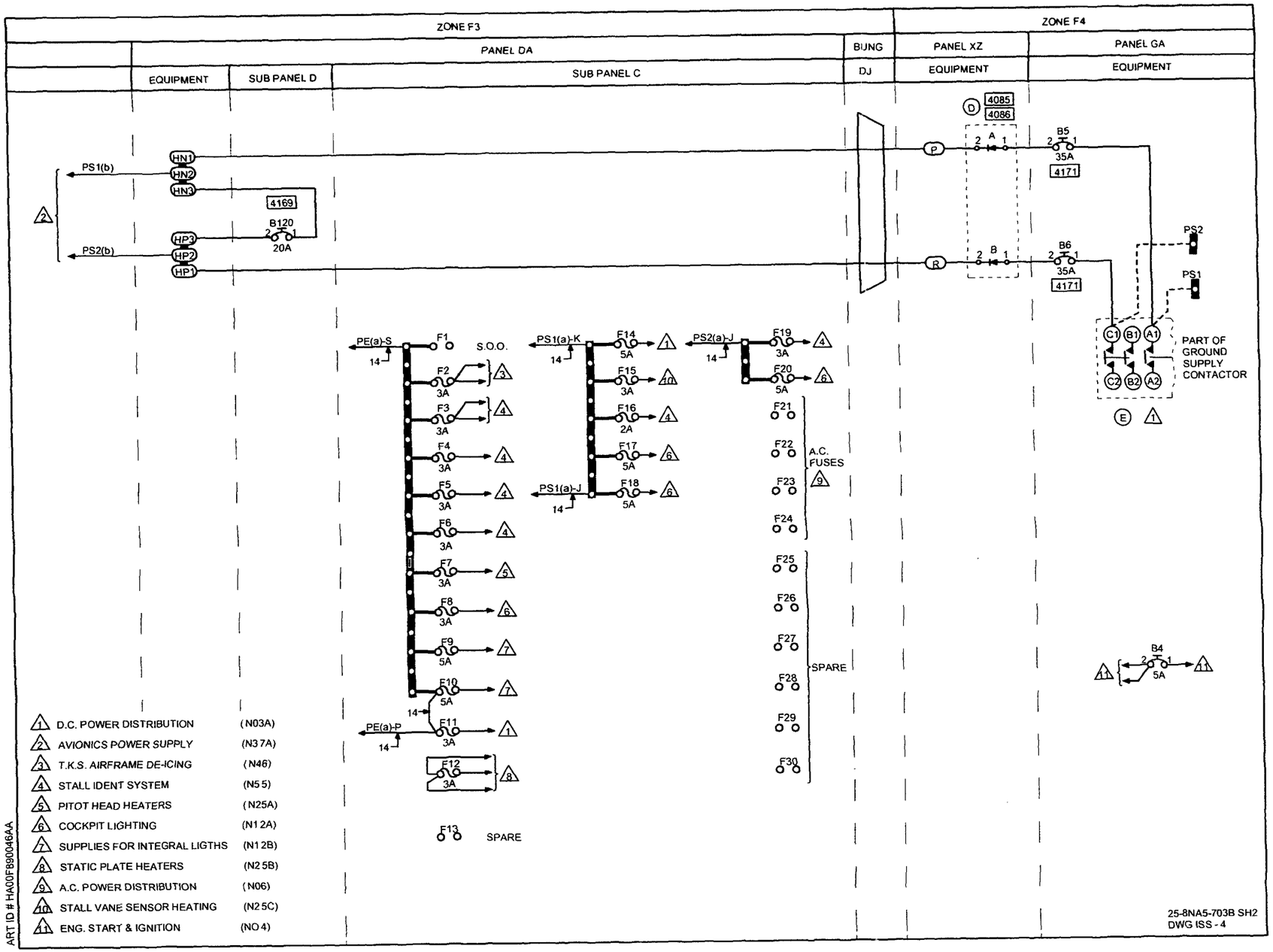
ZONE F3
ZONE F4
PANEL DA
BJNG
PANEL XZ
PANEL GA
EQUIPMENT
SUB PANEL D
SUB PANEL C
DJ
EQUIPMENT
EQUIPMENT
PS1(b)
PS2(b)
HN1
HN2
HN3
HP3
HP2
HP1
4169
B120
20A
4085
4086
B5
35A
4171
B6
35A
4171
PS2
PS1
C1
B1
A1
C2
B2
A2
PART OF GROUND SUPPLY CONTACTOR
PE(a)-S
PS1(a)-K
PS2(a)-J
PS1(a)-J
PE(a)-P
S.O.O.
A.C. FUSES
SPARE
SPARE
B4
5A
1 D.C. POWER DISTRIBUTION (N03A)
2 AVIONICS POWER SUPPLY (N37A)
3 T.K.S. AIRFRAME DE-ICING (N46)
4 STALL IDENT SYSTEM (N55)
5 PITOT HEAD HEATERS (N25A)
6 COCKPIT LIGHTING (N12A)
7 SUPPLIES FOR INTEGRAL LIGTHS (N12B)
8 STATIC PLATE HEATERS (N25B)
9 A.C. POWER DISTRIBUTION (N06)
10 STALL VANE SENSOR HEATING (N25C)
11 ENG. START & IGNITION (NO4)
25-8NA5-703B SH2
DWG ISS - 4
ART ID # HA00FB90046AA

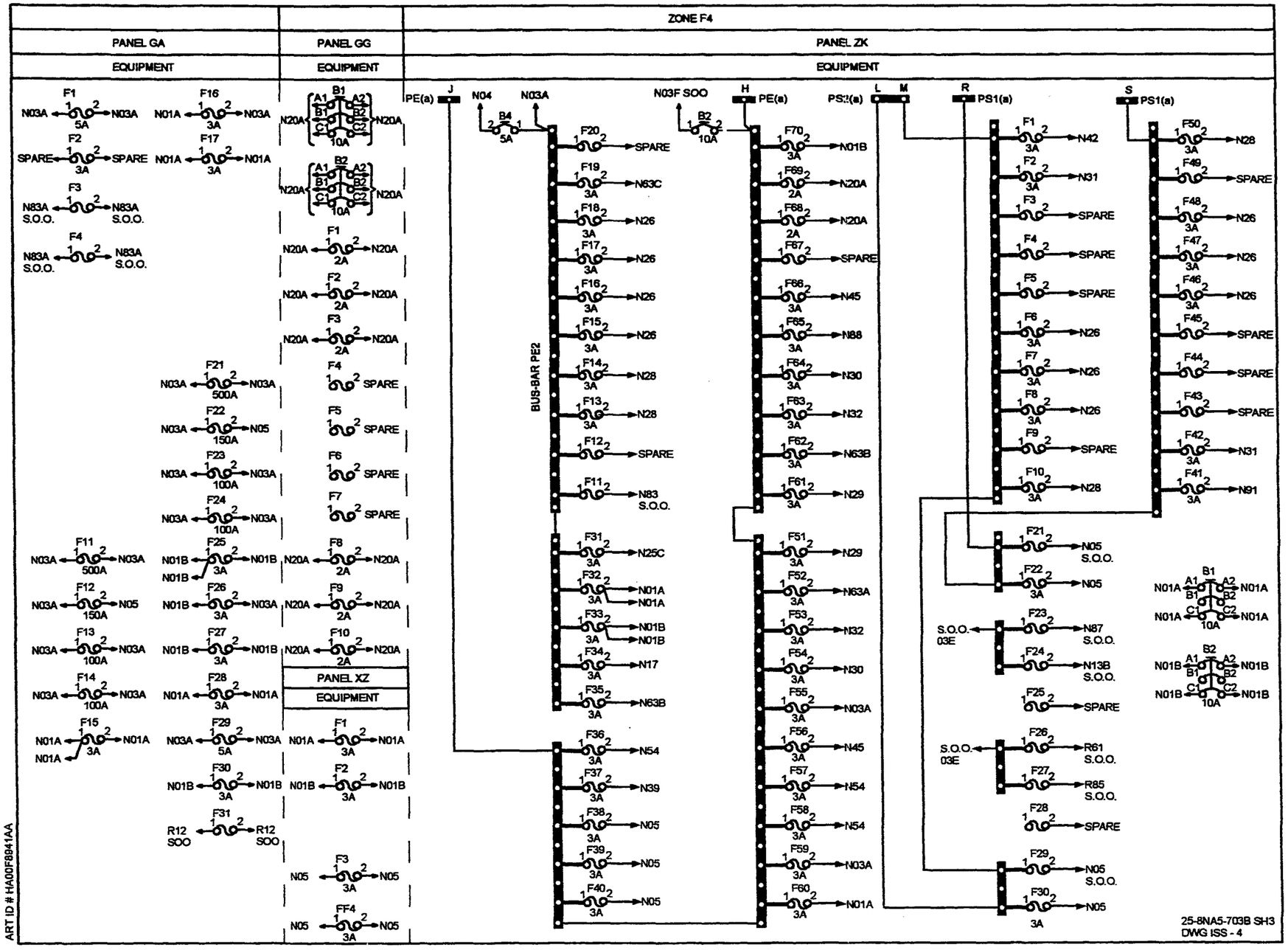
ZONE F4
PANEL GA
EQUIPMENT
PANEL GG
EQUIPMENT
PANEL ZK
EQUIPMENT
PANEL XZ
EQUIPMENT
BUS-BAR PE2
ART ID # HA00F8941AA
25-8NA5-703B SH3
DWG ISS - 4

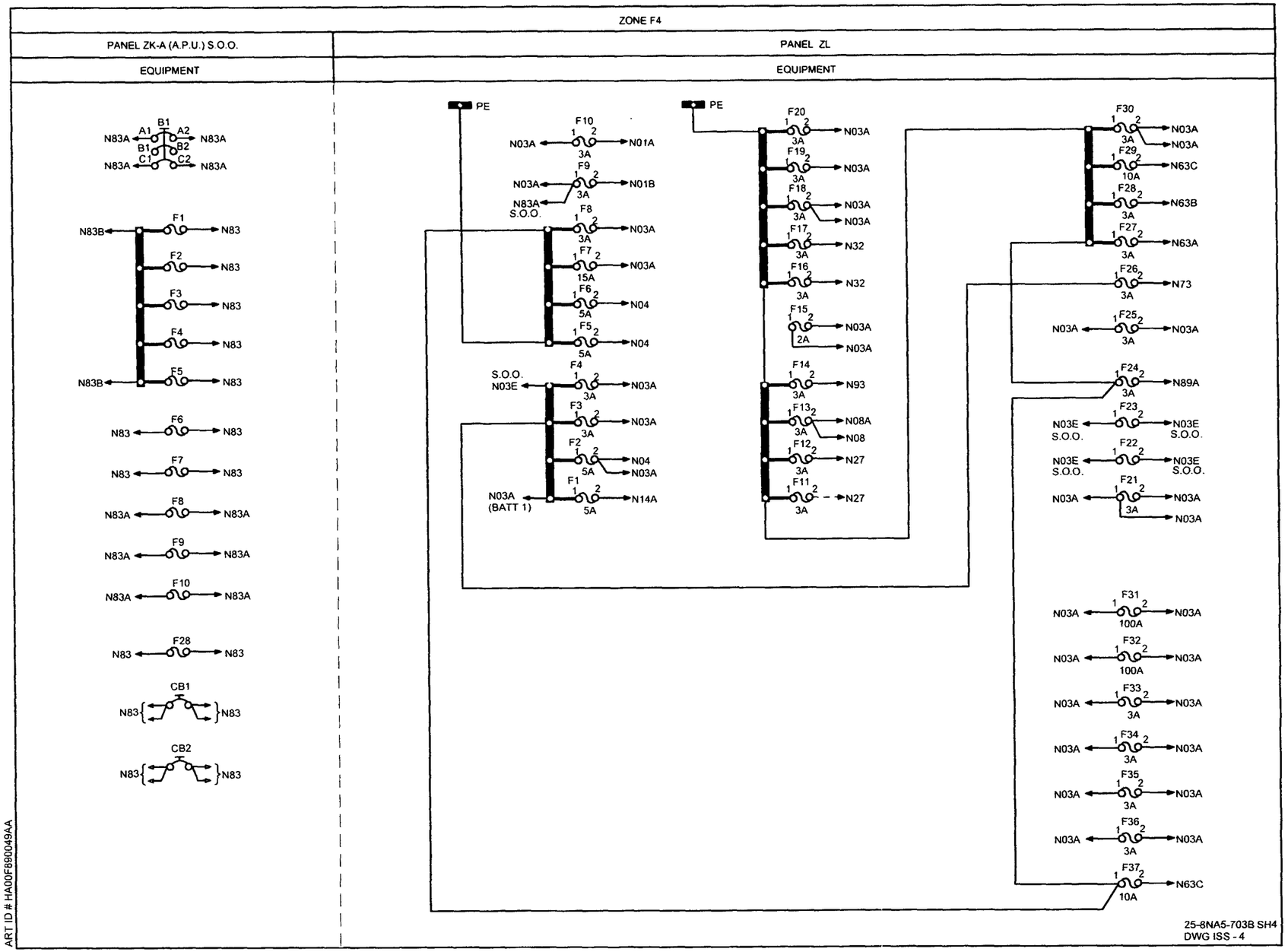
ZONE F4
PANEL ZK-A (A.P.U.) S.O.O.
EQUIPMENT
PANEL ZL
EQUIPMENT
PE
PE
B1
A1
A2
B1
B2
C1
C2
N83A
N83A
N83A
N83A
F1
N83B
N83
F2
N83
F3
N83
F4
N83
F5
N83B
N83
F6
N83
N83
F7
N83
N83
F8
N83A
N83A
F9
N83A
N83A
F10
N83A
N83A
F28
N83
N83
CB1
N83
N83
CB2
N83
N83
F10
N03A
3A
N01A
F9
N03A
3A
N01B
N83A
S.O.O.
F8
3A
N03A
F7
15A
N03A
F6
5A
N04
F5
5A
N04
F4
S.O.O.
N03E
3A
N03A
F3
3A
N03A
F2
5A
N04
N03A
F1
N03A
(BATT 1)
5A
N14A
F20
3A
N03A
F19
3A
N03A
F18
3A
N03A
N03A
F17
3A
N32
F16
3A
N32
F15
2A
N03A
N03A
F14
3A
N93
F13
3A
N08A
N08
F12
3A
N27
F11
3A
N27
F30
3A
N03A
N03A
F29
10A
N63C
F28
3A
N63B
F27
3A
N63A
F26
3A
N73
F25
N03A
3A
N03A
F24
3A
N89A
F23
N03E
S.O.O.
N03E
S.O.O.
F22
N03E
S.O.O.
N03E
S.O.O.
F21
N03A
3A
N03A
N03A
F31
N03A
100A
N03A
F32
N03A
100A
N03A
F33
N03A
3A
N03A
F34
N03A
3A
N03A
F35
N03A
3A
N03A
F36
N03A
3A
N03A
F37
10A
N63C
25-8NA5-703B SH4
DWG ISS - 4
ART ID # HA00F890049AA

IDENT	PART NUMBER	1234567 NOMENCLATURE	EFFECT FROM TO	UNITS PER ASSY
		DC POWER DISTRIBUTION	091093 095096 098098 100101	
	25-8NA5-703B	WIRING DIAGRAM- (MOD 253149C)		RF
A-D-XZ	S6GN55	.DIODE- (VK1152)		1
B-D-XZ	S6GN55	.DIODE- (VK1152)		1
B1-GG	583-96TCK14-10A	.CIRCUIT BREAKER-10AMP (VU0091)		1
B1-ZK	583-96TCK14-10A	.CIRCUIT BREAKER-10AMP (VU0091)		1
B1-ZKA	6TC14-10	.CIRCUIT BREAKER-10AMP (V82647)		1
B100-DAD	483TCG11J25-3A	.CIRCUIT BREAKER-3AMP (VU0091)		1
B101-DAD	483TCG11J25-3A	.CIRCUIT BREAKER-3AMP (VU0091)		1
B102-DAD	483TCG11J25-3A	.CIRCUIT BREAKER-3AMP (VU0091)		1
B103-DAD	483TCG11J25-3A	.CIRCUIT BREAKER-3AMP (VU0091)		1
B104-DAD	483TCG11J25-3A	.CIRCUIT BREAKER-3AMP (VU0091)		1
B105-DAD	SPARE	.SPARE-CIRCUIT BREAKER		1
B106-DAD	483TCG11J25-3A	.CIRCUIT BREAKER-3AMP (VU0091)		1
B107-DAD	483TCG11J25-3A	.CIRCUIT BREAKER-3AMP (VU0091)		1
B108-DAD	483TCG11J25-3A	.CIRCUIT BREAKER-3AMP (VU0091)		1
B109-DAD	SPARE	.SPARE-CIRCUIT BREAKER		1
B110-DAD	483TCG11J25-2A	.CIRCUIT BREAKER-2AMP (VU0091)		1
B111-DAD	483TCG11J25-3A	.CIRCUIT BREAKER-3AMP (VU0091)		1
B112-DAD	483TCG11J25-3A	.CIRCUIT BREAKER-3AMP (VU0091)		1
B113-DAD	483TCG11J25-3A	.CIRCUIT BREAKER-3AMP (VU0091)		1
B114-DAD	483TCG11J25-3A	.CIRCUIT BREAKER-3AMP (VU0091)		1
B115-DAD	483TCG11J25-3A	.CIRCUIT BREAKER-3AMP (VU0091)		1
B116-DAD	483TCG11J25-3A	.CIRCUIT BREAKER-3AMP (VU0091)		1
B117-DAD	483TCG11J25-3A	.CIRCUIT BREAKER-3AMP (VU0091)		1
		MISSING ITEM NO. NOT APPLICABLE		

– ITEM NOT ILLUSTRATED

IDENT	PART NUMBER	1234567 NOMENCLATURE	EFFECT FROM TO	UNITS PER ASSY
B118-DAD	483TCG11J25-3A	.CIRCUIT BREAKER-3AMP (VU0091)		1
B119-DAD	483TCG11J25-3A	.CIRCUIT BREAKER-3AMP (VU0091)		1
B120-DAD	25-8NF2217-20	.CIRCUIT BREAKER-20AMP (ALTERED FROM 483-96TCK14-20A (VU0091))		1
B121-DAD	483TCG11J25-3A	.CIRCUIT BREAKER-3AMP (VU0091)		1
B122-DAD	483TCG11J25-3A	.CIRCUIT BREAKER-3AMP (VU0091)		1
B123-DAD	483TCG11J25-3A	.CIRCUIT BREAKER-3AMP (VU0091)		1
B124-DAD	483TCG11J25-3A	.CIRCUIT BREAKER-3AMP (VU0091)		1
B125-DAD	483TCG11J25-3A	.CIRCUIT BREAKER-3AMP (VU0091)		1
B126-DAD	SPARE	.SPARE-CIRCUIT BREAKER		1
B127-DAD	SPARE	.SPARE-CIRCUIT BREAKER		1
B128-DAD	SPARE	.SPARE-CIRCUIT BREAKER		1
B129-DAD	SPARE	.SPARE-CIRCUIT BREAKER		1
B13-DAD	483TCG11J25-3A	.CIRCUIT BREAKER-3AMP (VU0091)		1
B130-DAD	SPARE	.SPARE-CIRCUIT BREAKER		1
B131-DAD	483TCG11J25-5A	.CIRCUIT BREAKER-5AMP (VU0091)		1
B132-DAD	25-8NF2217-15	.CIRCUIT BREAKER-15AMP (ALTERED FROM 483-96TCK14-15A (VU0091))		1
B14-DAD	483TCG11J25-5A	.CIRCUIT BREAKER-5AMP (VU0091)		1
B15-DAD	483TCG11J25-5A	.CIRCUIT BREAKER-5AMP (VU0091)		1
B16-DAD	483TCG11J25-5A	.CIRCUIT BREAKER-5AMP (VU0091)		1
B17-DAD	483TCG11J25-5A	.CIRCUIT BREAKER-5AMP (VU0091)		1
B18-DAD	483TCG11J25-3A	.CIRCUIT BREAKER-3AMP (VU0091)		1
B19-DAD	483TCG11J25-3A	.CIRCUIT BREAKER-3AMP (VU0091)		1
B2-GG	583-96TCK14-10A	.CIRCUIT BREAKER-10AMP (VU0091)		1
B2-ZK	583-96TCK14-10A	.CIRCUIT BREAKER-10AMP (VU0091)		1
B20-DAD	483TCG11J25-3A	.CIRCUIT BREAKER-3AMP (VU0091)		1
		MISSING ITEM NO. NOT APPLICABLE		

– ITEM NOT ILLUSTRATED

IDENT	PART NUMBER	1234567 NOMENCLATURE	EFFECT FROM TO	UNITS PER ASSY
B21-DAD	483TCG11J25-5A	.CIRCUIT BREAKER-5AMP (VU0091)		1
B22-DAD	483TCG11J25-3A	.CIRCUIT BREAKER-3AMP (VU0091)		1
B23-DAD	483TCG11J25-3A	.CIRCUIT BREAKER-3AMP (VU0091)		1
B24-DAD	483TCG11J25-1A	.CIRCUIT BREAKER-1AMP (VU0091)		1
B25-DAD	483TCG11J25-3A	.CIRCUIT BREAKER-3AMP (VU0091)		1
B26-DAD	25-8NF2217-25	.CIRCUIT BREAKER-25AMP (ALTERED FROM 483-96TCK14-25A (VU0091))		1
B27-DAD	25-8NF2217-25	.CIRCUIT BREAKER-25AMP (ALTERED FROM 483-96TCK14-25A (VU0091))		1
B28-DAD	483TCG11J25-3A	.CIRCUIT BREAKER-3AMP (VU0091)		1
B30-DAD	483TCG11J25-5A	.CIRCUIT BREAKER-5AMP (VU0091)		1
B31-DAD	483TCG11J25-5A	.CIRCUIT BREAKER-5AMP (VU0091)		1
B32-DAD	SPARE	.SPARE-CIRCUIT BREAKER		1
B33-DAD	483TCG11J25-5A	.CIRCUIT BREAKER-5AMP (VU0091)		1
B34-DAD	483TCG11J25-1A	.CIRCUIT BREAKER-1AMP (VU0091)		1
B35-DAD	483TCG11J25-3A	.CIRCUIT BREAKER-3AMP (VU0091)		1
B36-DAD	25-8NF2217-25	.CIRCUIT BREAKER-25AMP (ALTERED FROM 483-96TCK14-25A (VU0091))		1
B37-DAD	25-8NF2217-25	.CIRCUIT BREAKER-25AMP (ALTERED FROM 483-96TCK14-25A (VU0091))		1
B38-DAD	483TCG11J25-3A	.CIRCUIT BREAKER-3AMP (VU0091)		1
B4-GA	SPARE	.SPARE-CIRCUIT BREAKER,5AMP		1
B4-ZK	483TCG11J5-5A	.CIRCUIT BREAKER-5AMP (VU0091)		1
B40-DAD	483TCG11J25-5A	.CIRCUIT BREAKER-5AMP (VU0091)		1
B41-DAD	483TCG11J25-3A	.CIRCUIT BREAKER-3AMP (VU0091)		1
B42-DAD	483TCG11J25-3A	.CIRCUIT BREAKER-3AMP (VU0091)		1
		MISSING ITEM NO. NOT APPLICABLE		

– ITEM NOT ILLUSTRATED

IDENT	PART NUMBER	1234567 NOMENCLATURE	EFFECT FROM TO	UNITS PER ASSY
B43-DAD	483TCG11J25-3A	.CIRCUIT BREAKER-3AMP (VU0091)		1
B44-DAD	25-8NF2217-15	.CIRCUIT BREAKER-15AMP (ALTERED FROM 483-96TCK14-15A (VU0091))		1
B45-DAD	483TCG11J25-5A	.CIRCUIT BREAKER-5AMP (VU0091)		1
B46-DAD	483TCG11J25-2A	.CIRCUIT BREAKER-2AMP (VU0091)		1
B47-DAD	483TCG11J25-2A	.CIRCUIT BREAKER-2AMP (VU0091)		1
B48-DAD	483TCG11J25-3A	.CIRCUIT BREAKER-3AMP (VU0091)		1
B49-DAD	483TCG11J25-3A	.CIRCUIT BREAKER-3AMP (VU0091)		1
B5-GA	3TC2-35	.CIRCUIT BREAKER-35AMP (VK0142)		1
B50-DAD	483TCG11J25-5A	.CIRCUIT BREAKER-5AMP (VU0091)		1
B51-DAD	483TCG11J25-3A	.CIRCUIT BREAKER-3AMP (VU0091)		1
B52-DAD	483TCG11J25-3A	.CIRCUIT BREAKER-3AMP (VU0091)		1
B53-DAD	483TCG11J25-3A	.CIRCUIT BREAKER-3AMP (VU0091)		1
B54-DAD	25-8NF2217-15	.CIRCUIT BREAKER-15AMP (ALTERED FROM 483-96TCK14-15A (VU0091))		1
B55-DAD	483TCG11J25-5A	.CIRCUIT BREAKER-5AMP (VU0091)		1
B56-DAD	483TCG11J25-2A	.CIRCUIT BREAKER-2AMP (VU0091)		1
B57-DAD	483TCG11J25-2A	.CIRCUIT BREAKER-2AMP (VU0091)		1
B58-DAD	483TCG11J25-3A	.CIRCUIT BREAKER-3AMP (VU0091)		1
B59-DAD	483TCG11J25-3A	.CIRCUIT BREAKER-3AMP (VU0091)		1
B6-GA	3TC2-35	.CIRCUIT BREAKER-35AMP (VK0142)		1
B60-DAD	483TCG11J25-3A	.CIRCUIT BREAKER-3AMP (VU0091)		1
B61-DAD	25-8NF2217-7	.CIRCUIT BREAKER-7.5AMP (ALTERED FROM 483-96TCK14-7-5A (VU0091))		1
		MISSING ITEM NO. NOT APPLICABLE		

– ITEM NOT ILLUSTRATED

IDENT	PART NUMBER	1234567 NOMENCLATURE	EFFECT FROM TO	UNITS PER ASSY
B62-DAD	25-8NF2217-7	.CIRCUIT BREAKER-7.5AMP (ALTERED FROM 483-96TCK14-7-5A (VU0091))		1
B63-DAD	25-8NF2217-15	.CIRCUIT BREAKER-15AMP (ALTERED FROM 483-96TCK14-15A (VU0091))		1
B64-DAD	483TCG11J25-5A	.CIRCUIT BREAKER-5AMP (VU0091)		1
B65-DAD	SPARE	.SPARE-CIRCUIT BREAKER		1
B66-DAD	483TCG11J25-5A	.CIRCUIT BREAKER-5AMP (VU0091)		1
B67-DAD	483TCG11J25-3A	.CIRCUIT BREAKER-3AMP (VU0091)		1
B68-DAD	483TCG11J25-5A	.CIRCUIT BREAKER-5AMP (VU0091)		1
B69-DAD	483TCG11J25-3A	.CIRCUIT BREAKER-3AMP (VU0091)		1
B70-DAD	SPARE	.SPARE-CIRCUIT BREAKER		1
B71-DAD	483TCG11J25-5A	.CIRCUIT BREAKER-5AMP (VU0091)		1
B72-DAD	483TCG11J25-3A	.CIRCUIT BREAKER-3AMP (VU0091)		1
B73-DAD	25-8NF2217-15	.CIRCUIT BREAKER-15AMP (ALTERED FROM 483-96TCK14-15A (VU0091))		1
B74-DAD	483TCG11J25-5A	.CIRCUIT BREAKER-5AMP (VU0091)		1
B75-DAD	SPARE	.SPARE-CIRCUIT BREAKER		1
B76-DAD	483TCG11J25-5A	.CIRCUIT BREAKER-5AMP (VU0091)		1
B77-DAD	483TCG11J25-5A	.CIRCUIT BREAKER-5AMP (VU0091)		1
B78-DAD	483TCG11J25-5A	.CIRCUIT BREAKER-5AMP (VU0091)		1
B79-DAD	SPARE	.SPARE-CIRCUIT BREAKER		1
B80-DAD	SPARE	.SPARE-CIRCUIT BREAKER		1
B81-DAD	483TCG11J25-3A	.CIRCUIT BREAKER-3AMP (VU0091)		1
B82-DAD	483TCG11J25-3A	.CIRCUIT BREAKER-3AMP (VU0091)		1
B83-DAD	483TCG11J25-3A	.CIRCUIT BREAKER-3AMP (VU0091)		1
B84-DAD	SPARE	.SPARE-CIRCUIT BREAKER		1
B85-DAD	483TCG11J25-3A	.CIRCUIT BREAKER-3AMP (VU0091)		1
B86-DAD	483TCG11J25-5A	.CIRCUIT BREAKER-5AMP (VU0091)		1
		MISSING ITEM NO. NOT APPLICABLE		

– ITEM NOT ILLUSTRATED

IDENT	PART NUMBER	1234567 NOMENCLATURE	EFFECT FROM TO	UNITS PER ASSY
B87-DAD	483TCG11J25-5A	.CIRCUIT BREAKER-5AMP (VU0091)		1
B88-DAD	483TCG11J25-3A	.CIRCUIT BREAKER-3AMP (VU0091)		1
B89-DAD	483TCG11J25-3A	.CIRCUIT BREAKER-3AMP (VU0091)		1
B90-DAD	483TCG11J25-3A	.CIRCUIT BREAKER-3AMP (VU0091)		1
B91-DAD	483TCG11J25-3A	.CIRCUIT BREAKER-3AMP (VU0091)		1
B92-DAD	483TCG11J25-3A	.CIRCUIT BREAKER-3AMP (VU0091)		1
B93-DAD	483TCG11J25-3A	.CIRCUIT BREAKER-3AMP (VU0091)		1
B94-DAD	483TCG11J25-3A	.CIRCUIT BREAKER-3AMP (VU0091)		1
B95-DAD	SPARE	.SPARE-CIRCUIT BREAKER		1
B96-DAD	483TCG11J25-3A	.CIRCUIT BREAKER-3AMP (VU0091)		1
B97-DAD	483TCG11J25-3A	.CIRCUIT BREAKER-3AMP (VU0091)		1
B98-DAD	483TCG11J25-3A	.CIRCUIT BREAKER-3AMP (VU0091)		1
B99-DAD	483TCG11J25-3A	.CIRCUIT BREAKER-3AMP (VU0091)		1
CB1-ZKA	SPARE	.SPARE-CIRCUIT BREAKER		1
CB2-ZKA	SPARE	.SPARE-CIRCUIT BREAKER		1
D-XZ	25-8NF2371-31A	.HEATSINK ASSY- (COMPRISING OF: DIODES S6GN55 (VK1152))		1
DJ	422255-7	.BUNG- (VK1793)		1
E-GA	LDG150Y4	.CONTACTOR-35AMP (VK4358)		1
F1-GA	5920-99-0120076	.FUSE-5AMP (VK0657)		1
F1-GG	5920-99-0120074	.FUSE-2AMP (VK0657)		1
F1-XZ	SPARE	.SPARE-FUSE,3AMP		1
F1-ZK	5920-99-0120075	.FUSE-3AMP (VK0657)		1
F1-ZKA	SPARE	.SPARE-FUSE		1
F1-ZL	5920-99-0120076	.FUSE-5AMP (VK0657)		1
F10-DAC	5920-99-0120076	.FUSE-5AMP (VK0657)		1
F10-GG	5920-99-0120074	.FUSE-2AMP (VK0657)		1
		MISSING ITEM NO. NOT APPLICABLE		

- ITEM NOT ILLUSTRATED

IDENT	PART NUMBER	1234567 NOMENCLATURE	EFFECT FROM TO	UNITS PER ASSY
F10-ZK	5920-99-0120075	.FUSE-3AMP (VK0657)		1
F10-ZKA	SPARE	.SPARE-FUSE		1
F10-ZL	5920-99-0120075	.FUSE-3AMP (VK0657)		1
F11-DAC	5920-99-0120075	.FUSE-3AMP (VK0657)		1
F11-GA	L1330A500	.FUSE-500AMP (VU0154)		1
F11-ZK	SPARE	.SPARE-FUSE		1
F11-ZL	5920-99-0120075	.FUSE-3AMP (VK0657)		1
F12-DAC	5920-99-0120075	.FUSE-3AMP (VK0657)		1
F12-GA	L1330A150	.FUSE-150AMP (VU0154)		1
F12-ZK	SPARE	.SPARE-FUSE		1
F12-ZL	5920-99-0120075	.FUSE-3AMP (VK0657)		1
F13-GA	UAM100	.FUSE-100AMP (VK0672)		1
F13-ZK	5920-99-0120075	.FUSE-3AMP (VK0657)		1
F13-ZL	5920-99-0120075	.FUSE-3AMP (VK0657)		1
F14-DAC	5920-99-0120076	.FUSE-5AMP (VK0657)		1
F14-GA	UAM100	.FUSE-100AMP (VK0672)		1
F14-ZK	5920-99-0120075	.FUSE-3AMP (VK0657)		1
F14-ZL	5920-99-0120075	.FUSE-3AMP (VK0657)		1
F15-DAC	5920-99-0120075	.FUSE-3AMP (VK0657)		1
F15-GA	5920-99-0120075	.FUSE-3AMP (VK0657)		1
F15-ZK	5920-99-0120075	.FUSE-3AMP (VK0657)		1
F15-ZL	5920-99-0120074	.FUSE-2AMP (VK0657)		1
F16-DAC	5920-99-0120074	.FUSE-2AMP (VK0657)		1
F16-GA	5920-99-0120075	.FUSE-3AMP (VK0657)		1
F16-ZK	5920-99-0120075	.FUSE-3AMP (VK0657)		1
F16-ZL	5920-99-0120075	.FUSE-3AMP (VK0657)		1
		MISSING ITEM NO. NOT APPLICABLE		

– ITEM NOT ILLUSTRATED

IDENT	PART NUMBER	1234567 NOMENCLATURE	EFFECT FROM TO	UNITS PER ASSY
F17-DAC	5920-99-0120076	.FUSE-5AMP (VK0657)		1
F17-GA	5920-99-0120075	.FUSE-3AMP (VK0657)		1
F17-ZK	5920-99-0120075	.FUSE-3AMP (VK0657)		1
F17-ZL	5920-99-0120075	.FUSE-3AMP (VK0657)		1
F18-DAC	5920-99-0120076	.FUSE-5AMP (VK0657)		1
F18-ZK	5920-99-0120075	.FUSE-3AMP (VK0657)		1
F18-ZL	5920-99-0120075	.FUSE-3AMP (VK0657)		1
F19-DAC	5920-99-0120075	.FUSE-3AMP (VK0657)		1
F19-ZK	5920-99-0120075	.FUSE-3AMP (VK0657)		1
F19-ZL	5920-99-0120075	.FUSE-3AMP (VK0657)		1
F2-DAC	5920-99-0120075	.FUSE-3AMP (VK0657)		1
F2-GA	SPARE	.SPARE-FUSE,3AMP		1
F2-GG	5920-99-0120074	.FUSE-2AMP (VK0657)		1
F2-XZ	SPARE	.SPARE-FUSE,3AMP		1
F2-ZK	5920-99-0120075	.FUSE-3AMP (VK0657)		1
F2-ZKA	SPARE	.SPARE-FUSE		1
F2-ZL	5920-99-0120076	.FUSE-5AMP (VK0657)		1
F20-DAC	5920-99-0120076	.FUSE-5AMP (VK0657)		1
F20-ZK	SPARE	.SPARE-FUSE		1
F20-ZL	5920-99-0120075	.FUSE-3AMP (VK0657)		1
F21-GA	L1330A500	.FUSE-500AMP (VU0154)		1
F21-ZK	SPARE	.SPARE-FUSE		1
F21-ZL	SPARE	.SPARE-FUSE,3AMP		1
F22-GA	L1330A150	.FUSE-150AMP (VU0154)		1
F22-ZK	5920-99-0120075	.FUSE-3AMP (VK0657)		1
F22-ZL	SPARE	.SPARE-FUSE		1
F23-GA	UAM100	.FUSE-100AMP (VK0672)		1
F23-ZK	SPARE	.SPARE-FUSE		1
F23-ZL	SPARE	.SPARE-FUSE		1
		MISSING ITEM NO. NOT APPLICABLE		

– ITEM NOT ILLUSTRATED

IDENT	PART NUMBER	1234567 NOMENCLATURE	EFFECT FROM TO	UNITS PER ASSY
F24-GA	UAM100	.FUSE-100AMP (VK0672)		1
F24-ZK	SPARE	.SPARE-FUSE		1
F24-ZL	5920-99-0120075	.FUSE-3AMP (VK0657)		1
F25-GA	5920-99-0120075	.FUSE-3AMP (VK0657)		1
F25-ZK	SPARE	.SPARE-FUSE		1
F25-ZL	5920-99-0120075	.FUSE-3AMP (VK0657)		1
F26-GA	5920-99-0120075	.FUSE-3AMP (VK0657)		1
F26-ZK	SPARE	.SPARE-FUSE		1
F26-ZL	5920-99-0120075	.FUSE-3AMP (VK0657)		1
F27-GA	5920-99-0120075	.FUSE-3AMP (VK0657)		1
F27-ZK	SPARE	.SPARE-FUSE		1
F27-ZL	5920-99-0120075	.FUSE-3AMP (VK0657)		1
F28-GA	5920-99-0120075	.FUSE-3AMP (VK0657)		1
F28-ZK	SPARE	.SPARE-FUSE		1
F28-ZKA	SPARE	.SPARE-FUSE		1
F28-ZL	5920-99-0120075	.FUSE-3AMP (VK0657)		1
F29-GA	5920-99-0120076	.FUSE-5AMP (VK0657)		1
F29-ZK	SPARE	.SPARE-FUSE		1
F29-ZL	5920-99-0120078	.FUSE-10AMP (VK0657)		1
F3-DAC	5920-99-0120075	.FUSE-3AMP (VK0657)		1
F3-GA	SPARE	.SPARE-FUSE		1
F3-GG	5920-99-0120074	.FUSE-2AMP (VK0657)		1
F3-XZ	SPARE	.SPARE-FUSE,3AMP		1
F3-ZK	SPARE	.SPARE-FUSE		1
F3-ZKA	SPARE	.SPARE-FUSE		1
F3-ZL	5920-99-0120075	.FUSE-3AMP (VK0657)		1
F30-GA	5920-99-0120075	.FUSE-3AMP (VK0657)		1
F30-ZK	5920-99-0120075	.FUSE-3AMP (VK0657)		1
F30-ZL	5920-99-0120075	.FUSE-3AMP (VK0657)		1
F31-GA	SPARE	.SPARE-FUSE		1
F31-ZK	5920-99-0120075	.FUSE-3AMP (VK0657)		1
		MISSING ITEM NO. NOT APPLICABLE		

– ITEM NOT ILLUSTRATED

IDENT	PART NUMBER	1234567 NOMENCLATURE	EFFECT FROM TO	UNITS PER ASSY
F31-ZL	UAM100	.FUSE-100AMP (VK0672)		1
F32-ZK	5920-99-0120075	.FUSE-3AMP (VK0657)		1
F32-ZL	UAM100	.FUSE-100AMP (VK0672)		1
F33-ZK	5920-99-0120075	.FUSE-3AMP (VK0657)		1
F33-ZL	5920-99-0120075	.FUSE-3AMP (VK0657)		1
F34-ZK	5920-99-0120075	.FUSE-3AMP (VK0657)		1
F34-ZL	5920-99-0120075	.FUSE-3AMP (VK0657)		1
F35-ZK	5920-99-0120075	.FUSE-3AMP (VK0657)		1
F35-ZL	5920-99-0120075	.FUSE-3AMP (VK0657)		1
F36-ZK	5920-99-0120075	.FUSE-3AMP (VK0657)		1
F36-ZL	5920-99-0120075	.FUSE-3AMP (VK0657)		1
F37-ZK	5920-99-0120075	.FUSE-3AMP (VK0657)		1
F37-ZL	5920-99-0120078	.FUSE-10AMP (VK0657)		1
F38-ZK	5920-99-0120075	.FUSE-3AMP (VK0657)		1
F39-ZK	5920-99-0120075	.FUSE-3AMP (VK0657)		1
F4-DAC	5920-99-0120075	.FUSE-3AMP (VK0657)		1
F4-GA	SPARE	.SPARE-FUSE		1
F4-GG	SPARE	.SPARE-FUSE		1
F4-XZ	SPARE	.SPARE-FUSE,3AMP		1
F4-ZK	SPARE	.SPARE-FUSE		1
F4-ZKA	SPARE	.SPARE-FUSE		1
F4-ZL	5920-99-0120075	.FUSE-3AMP (VK0657)		1
F40-ZK	5920-99-0120075	.FUSE-3AMP (VK0657)		1
F41-ZK	5920-99-0120075	.FUSE-3AMP (VK0657)		1
F42-ZK	5920-99-0120075	.FUSE-3AMP (VK0657)		1
F43-ZK	SPARE	.SPARE-FUSE		1
F44-ZK	SPARE	.SPARE-FUSE		1
F45-ZK	SPARE	.SPARE-FUSE		1
F46-ZK	5920-99-0120075	.FUSE-3AMP (VK0657)		1
		MISSING ITEM NO. NOT APPLICABLE		

– ITEM NOT ILLUSTRATED

IDENT	PART NUMBER	1234567 NOMENCLATURE	EFFECT FROM TO	UNITS PER ASSY
F47-ZK	5920-99-0120075	.FUSE-3AMP (VK0657)		1
F48-ZK	5920-99-0120075	.FUSE-3AMP (VK0657)		1
F5-DAC	5920-99-0120075	.FUSE-3AMP (VK0657)		1
F5-GG	SPARE	.SPARE-FUSE		1
F5-ZK	SPARE	.SPARE-FUSE		1
F5-ZKA	SPARE	.SPARE-FUSE		1
F5-ZL	5920-99-0120076	.FUSE-5AMP (VK0657)		1
F50-ZK	5920-99-0120075	.FUSE-3AMP (VK0657)		1
F51-ZK	5920-99-0120075	.FUSE-3AMP (VK0657)		1
F52-ZK	5920-99-0120075	.FUSE-3AMP (VK0657)		1
F53-ZK	5920-99-0120075	.FUSE-3AMP (VK0657)		1
F54-ZK	5920-99-0120075	.FUSE-3AMP (VK0657)		1
F55-ZK	5920-99-0120075	.FUSE-3AMP (VK0657)		1
F56-ZK	5920-99-0120075	.FUSE-3AMP (VK0657)		1
F57-ZK	5920-99-0120075	.FUSE-3AMP (VK0657)		1
F58-ZK	5920-99-0120075	.FUSE-3AMP (VK0657)		1
F59-ZK	5920-99-0120075	.FUSE-3AMP (VK0657)		1
F6-DAC	5920-99-0120075	.FUSE-3AMP (VK0657)		1
F6-GG	SPARE	.SPARE-FUSE		1
F6-ZK	5920-99-0120075	.FUSE-3AMP (VK0657)		1
F6-ZKA	SPARE	.SPARE-FUSE		1
F6-ZL	5920-99-0120076	.FUSE-5AMP (VK0657)		1
F60-ZK	5920-99-0120075	.FUSE-3AMP (VK0657)		1
F61-ZK	5920-99-0120075	.FUSE-3AMP (VK0657)		1
F62-ZK	5920-99-0120075	.FUSE-3AMP (VK0657)		1
F63-ZK	5920-99-0120075	.FUSE-3AMP (VK0657)		1
F64-ZK	5920-99-0120075	.FUSE-3AMP (VK0657)		1
		MISSING ITEM NO. NOT APPLICABLE		

– ITEM NOT ILLUSTRATED

IDENT	PART NUMBER	1234567 NOMENCLATURE	EFFECT FROM TO	UNITS PER ASSY
F65-ZK	5920-99-0120075	.FUSE-3AMP (VK0657)		1
F66-ZK	5920-99-0120075	.FUSE-3AMP (VK0657)		1
F67-ZK	SPARE	.SPARE-FUSE		1
F68-ZK	5920-99-0120074	.FUSE-2AMP (VK0657)		1
F69-ZK	5920-99-0120074	.FUSE-2AMP (VK0657)		1
F7-DAC	5920-99-0120075	.FUSE-3AMP (VK0657)		1
F7-GG	SPARE	.SPARE-FUSE		1
F7-ZK	5920-99-0120075	.FUSE-3AMP (VK0657)		1
F7-ZKA	SPARE	.SPARE-FUSE		1
F7-ZL	5920-99-0120079	.FUSE-15AMP (VK0657)		1
F70-ZK	5920-99-0120075	.FUSE-3AMP (VK0657)		1
F8-DAC	5920-99-0120075	.FUSE-3AMP (VK0657)		1
F8-GG	5920-99-0120074	.FUSE-2AMP (VK0657)		1
F8-ZK	5920-99-0120075	.FUSE-3AMP (VK0657)		1
F8-ZKA	SPARE	.SPARE-FUSE		1
F8-ZL	5920-99-0120075	.FUSE-3AMP (VK0657)		1
F9-DAC	5920-99-0120076	.FUSE-5AMP (VK0657)		1
F9-GG	5920-99-0120074	.FUSE-2AMP (VK0657)		1
F9-ZK	SPARE	.SPARE-FUSE		1
F9-ZKA	SPARE	.SPARE-FUSE		1
F9-ZL	5920-99-0120075	.FUSE-3AMP (VK0657)		1
HN-DA	HWBUN1146S3B	.TERMINAL BLOCK- (VK0574)		1
HP-DA	HWBUN1146S3B	.TERMINAL BLOCK- (VK0574)		1

MISSING ITEM NO. NOT APPLICABLE

– ITEM NOT ILLUSTRATED

ZONE F3

PANEL DA

SUB PANEL D

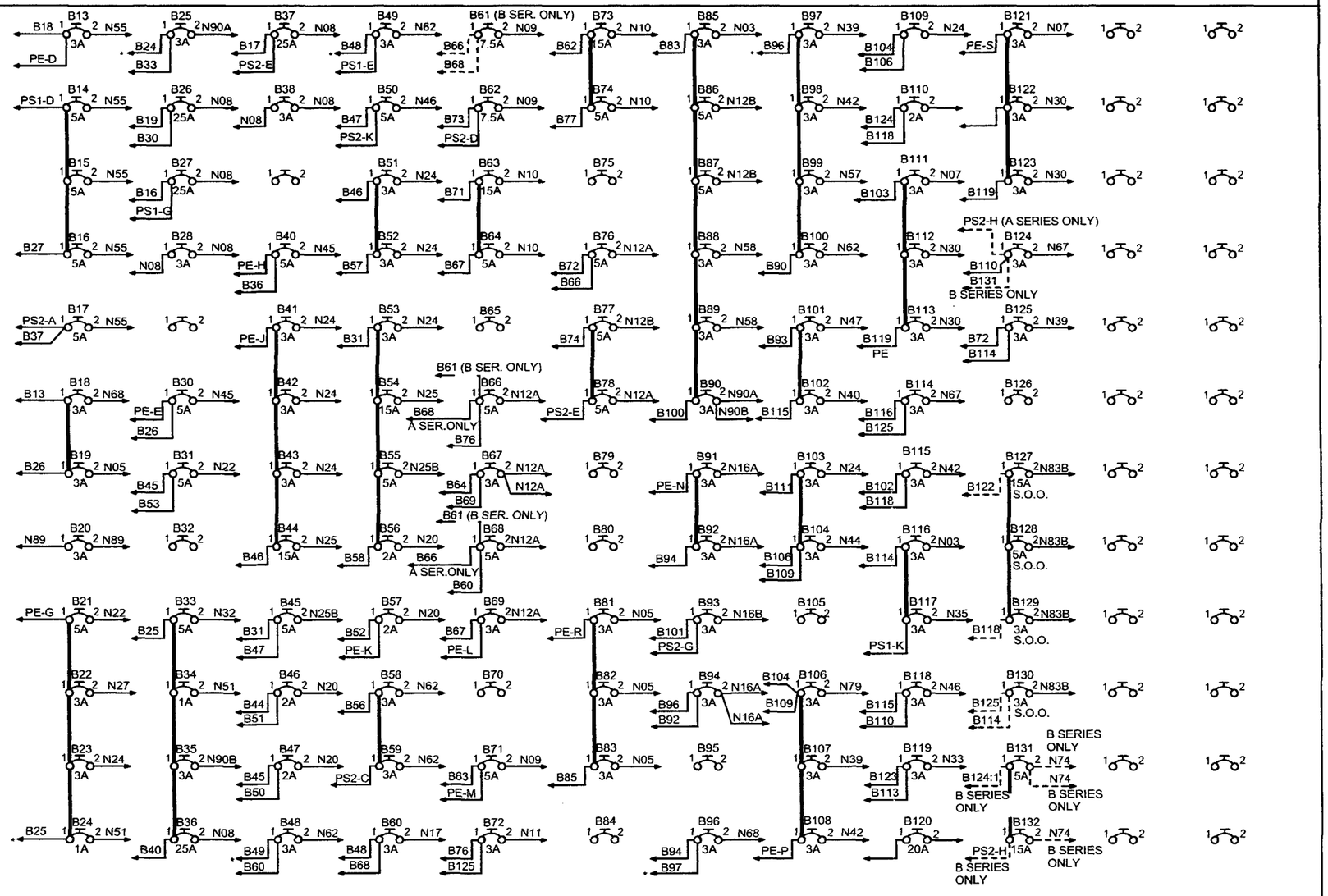

1. SYMBOL * DENOTES A SOLID LINK CONNECTION BETWEEN CIRCUIT BREAKERS EVEN THOUGH AN ARROW IS SHOWN.

2. ALL CIRCUIT BREAKER WIRE LINKS ARE TO BE SIZE 10 KP260 ANA TO SPEC S3200.

25-8NA5-1003B SH 1
DWG ISS - 2

ART ID # HA00F890054AA

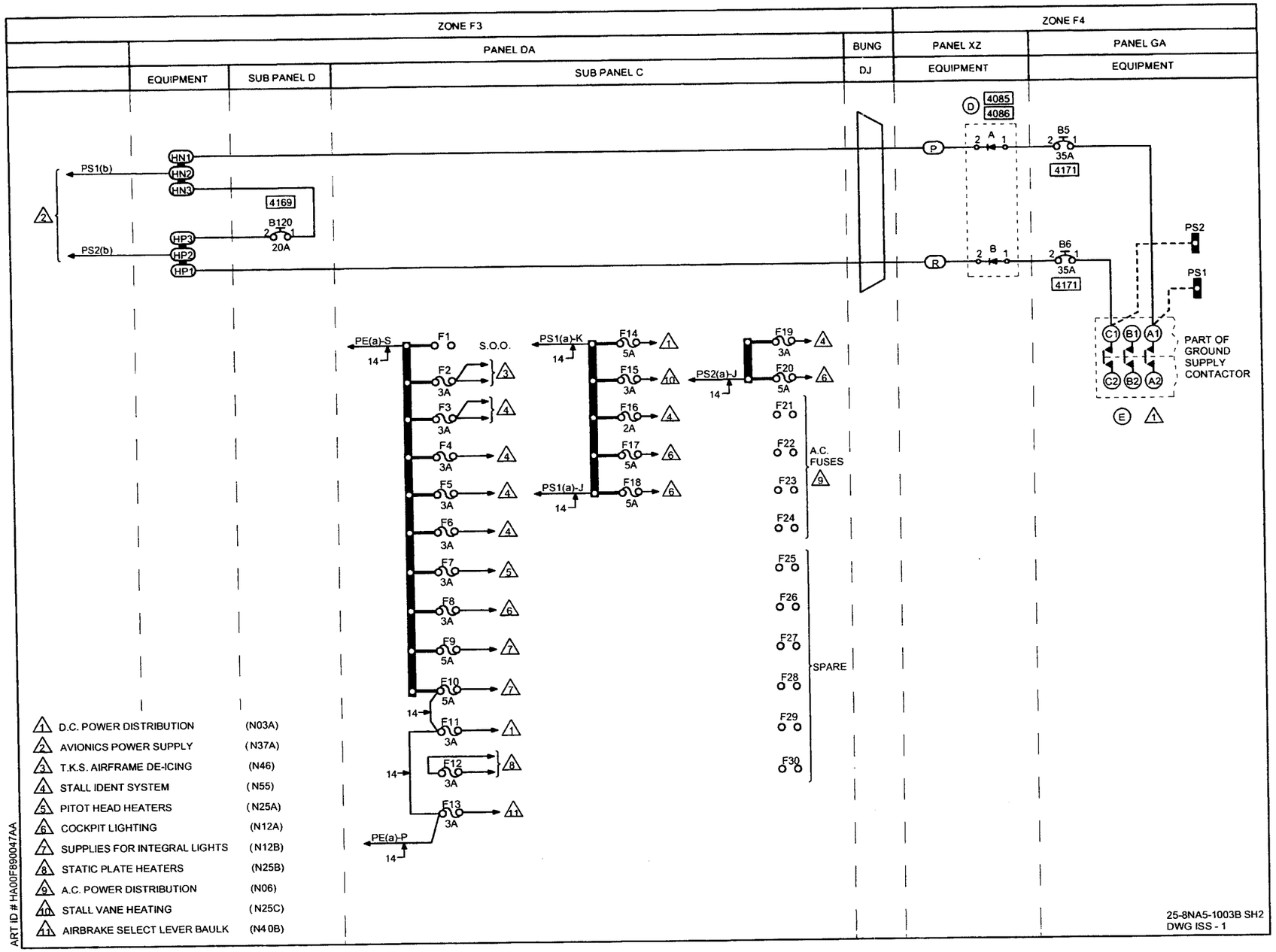
ZONE F3
ZONE F4
PANEL DA
BUNG
PANEL XZ
PANEL GA
EQUIPMENT
SUB PANEL D
SUB PANEL C
DJ
EQUIPMENT
EQUIPMENT
PS1(b)
PS2(b)
HN1
HN2
HN3
HP3
HP2
HP1
4169
B120
20A
4085
4086
B5
35A
4171
B6
35A
4171
PS2
PS1
C1 B1 A1
C2 B2 A2
PART OF GROUND SUPPLY CONTACTOR
PE(a)-S
S.O.O.
PS1(a)-K
PS1(a)-J
PS2(a)-J
PE(a)-P
F1
F2 3A
F3 3A
F4 3A
F5 3A
F6 3A
F7 3A
F8 3A
F9 5A
F10 5A
F11 3A
F12 3A
F13 3A
F14 5A
F15 3A
F16 2A
F17 5A
F18 5A
F19 3A
F20 5A
F21
F22
F23
F24
A.C. FUSES
F25
F26
F27
F28
F29
F30
SPARE
1 D.C. POWER DISTRIBUTION (N03A)
2 AVIONICS POWER SUPPLY (N37A)
3 T.K.S. AIRFRAME DE-ICING (N46)
4 STALL IDENT SYSTEM (N55)
5 PITOT HEAD HEATERS (N25A)
6 COCKPIT LIGHTING (N12A)
7 SUPPLIES FOR INTEGRAL LIGHTS (N12B)
8 STATIC PLATE HEATERS (N25B)
9 A.C. POWER DISTRIBUTION (N06)
10 STALL VANE HEATING (N25C)
11 AIRBRAKE SELECT LEVER BAULK (N40B)
ART ID # HA00F890047AA
25-8NA5-1003B SH2
DWG ISS - 1

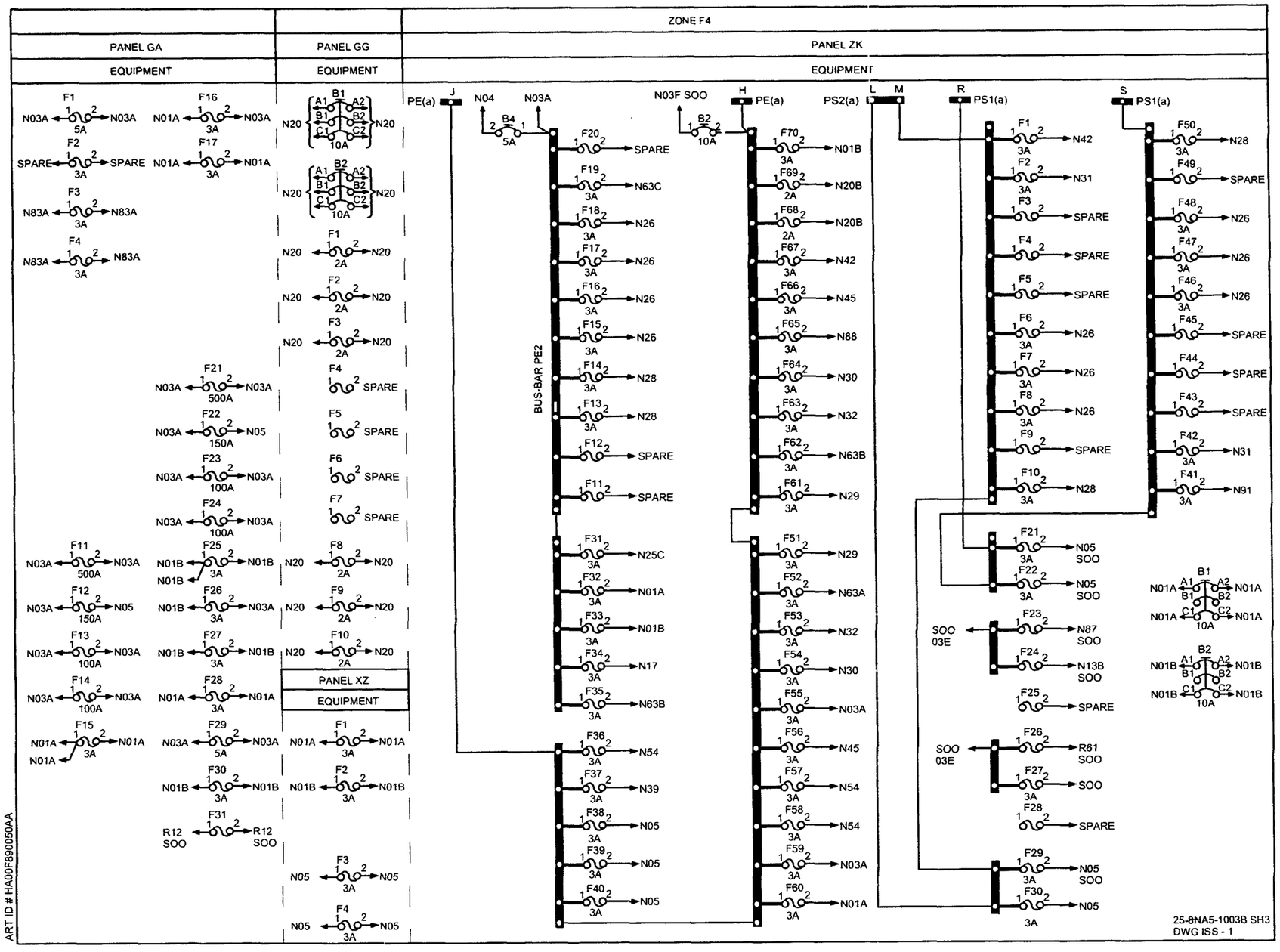
ZONE F4
PANEL GA
EQUIPMENT
PANEL GG
EQUIPMENT
PANEL ZK
EQUIPMENT
PANEL XZ
EQUIPMENT
BUS-BAR PE2
PE(a)
N04
N03A
N03F SOO
PE(a)
PS2(a)
PS1(a)
PS1(a)
SPARE
SOO
03E
25-8NA5-1003B SH3
DWG ISS - 1
ART ID # HA00F890050AA

ZONE F4

PANEL ZK-A (A.P.U.) S.O.O.	PANEL ZL
EQUIPMENT	EQUIPMENT

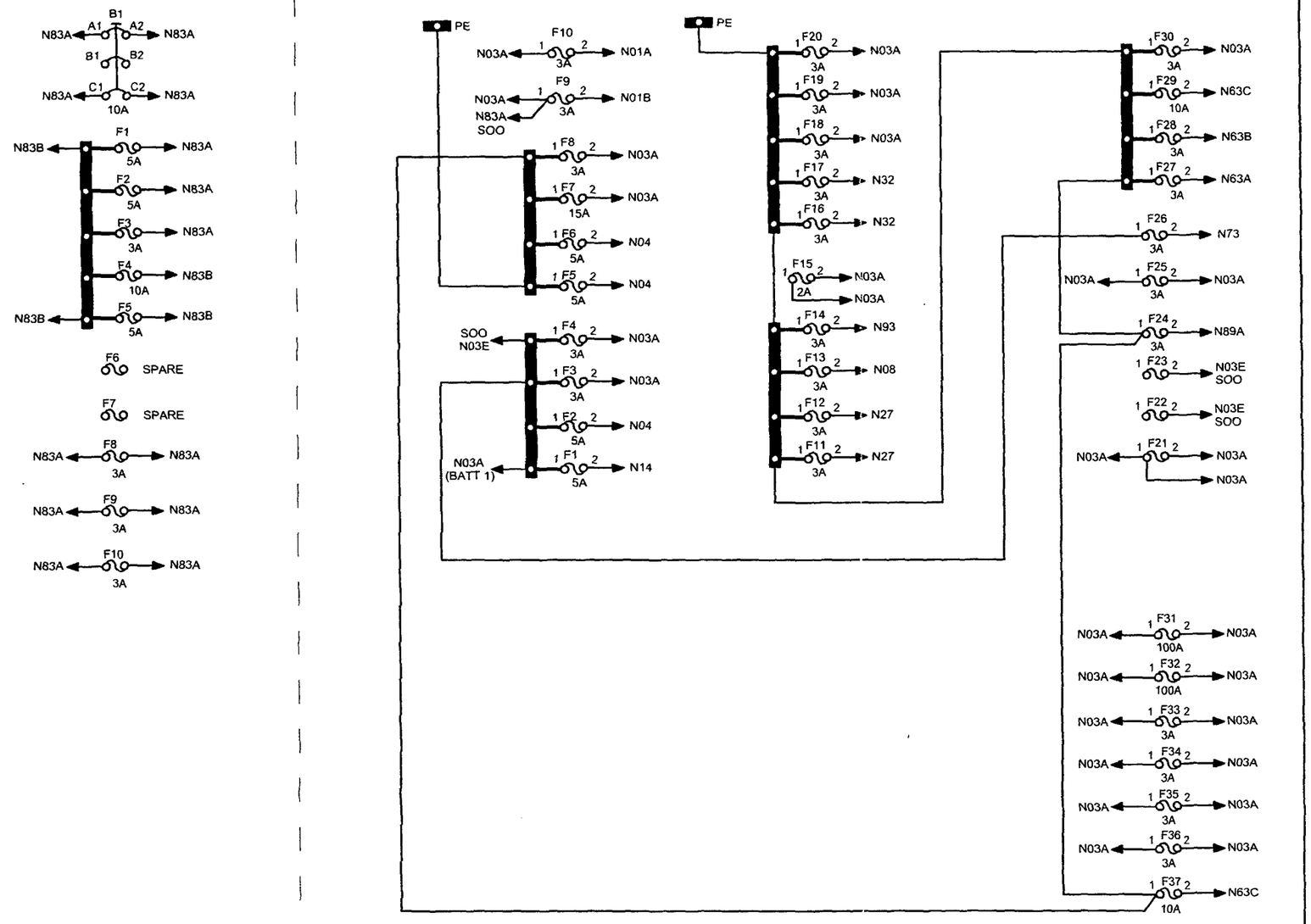

ART ID # HA00F890058AA

IDENT	PART NUMBER	1234567 NOMENCLATURE	EFFECT FROM TO	UNITS PER ASSY
		DC POWER DISTRIBUTION	099099	
	25-8NA5-1003B	WIRING DIAGRAM- (MOD 252994C)		RF
A-D-XZ	S6GN55	.DIODE- (VK1152) (USED ON 25-8NF2371-31A)		1
B-D-XZ	S6GN55	.DIODE- (VK1152) (USED ON 25-8NF2371-31A)		1
B1-GG	583-96TCK14-10A	.CIRCUIT BREAKER-10A (VU0091)		1
B1-ZK	583-96TCK14-10A	.CIRCUIT BREAKER-10A (VU0091)		1
B1-ZKA	6TC14-10	.CIRCUIT BREAKER-10A (V82647)		1
B100-DAD	483TCG11J25-3A	.CIRCUIT BREAKER-3A (VU0091)		1
B101-DAD	483TCG11J25-3A	.CIRCUIT BREAKER-3A (VU0091)		1
B102-DAD	483TCG11J25-3A	.CIRCUIT BREAKER-3A (VU0091)		1
B103-DAD	483TCG11J25-3A	.CIRCUIT BREAKER-3A (VU0091)		1
B104-DAD	483TCG11J25-3A	.CIRCUIT BREAKER-3A (VU0091)		1
B105-DAD	SPARE	.SPARE-CIRCUIT BREAKER		1
B106-DAD	483TCG11J25-3A	.CIRCUIT BREAKER-3A (VU0091)		1
B107-DAD	483TCG11J25-3A	.CIRCUIT BREAKER-3A (VU0091)		1
B108-DAD	483TCG11J25-3A	.CIRCUIT BREAKER-3A (VU0091)		1
B109-DAD	483TCG11J25-3A	.CIRCUIT BREAKER-3A (VU0091)		1
B110-DAD	483TCG11J25-2A	.CIRCUIT BREAKER-2A (VU0091)		1
B111-DAD	483TCG11J25-3A	.CIRCUIT BREAKER-3A (VU0091)		1
B112-DAD	483TCG11J25-3A	.CIRCUIT BREAKER-3A (VU0091)		1
B113-DAD	483TCG11J25-3A	.CIRCUIT BREAKER-3A (VU0091)		1
B114-DAD	483TCG11J25-3A	.CIRCUIT BREAKER-3A (VU0091)		1
B115-DAD	483TCG11J25-3A	.CIRCUIT BREAKER-3A (VU0091)		1
B116-DAD	483TCG11J25-3A	.CIRCUIT BREAKER-3A (VU0091)		1
B117-DAD	483TCG11J25-3A	.CIRCUIT BREAKER-3A (VU0091)		1
		MISSING ITEM NO. NOT APPLICABLE		

– ITEM NOT ILLUSTRATED

IDENT	PART NUMBER	1234567 NOMENCLATURE	EFFECT FROM TO	UNITS PER ASSY
B118-DAD	483TCG11J25-3A	.CIRCUIT BREAKER-3A (VU0091)		1
B119-DAD	483TCG11J25-3A	.CIRCUIT BREAKER-3A (VU0091)		1
B120-DAD	25-8NF2217-20	.CIRCUIT BREAKER-20AMP (ALTERED FROM 483-96TCK14-20A (VU0091))		1
B121-DAD	483TCG11J25-3A	.CIRCUIT BREAKER-3A (VU0091)		1
B122-DAD	483TCG11J25-3A	.CIRCUIT BREAKER-3A (VU0091)		1
B123-DAD	483TCG11J25-3A	.CIRCUIT BREAKER-3A (VU0091)		1
B124-DAD	483TCG11J25-3A	.CIRCUIT BREAKER-3A (VU0091)		1
B125-DAD	483TCG11J25-3A	.CIRCUIT BREAKER-3A (VU0091)		1
B126-DAD	SPARE	.SPARE-CIRCUIT BREAKER		1
B127-DAD	25-8NF2217-15	.CIRCUIT BREAKER-15AMP (ALTERED FROM 483-96TCK14-15A (VU0091))		1
B128-DAD	483TCG11J25-5A	.CIRCUIT BREAKER-5A (VU0091)		1
B129-DAD	483TCG11J25-3A	.CIRCUIT BREAKER-3A (VU0091)		1
B13-DAD	483TCG11J25-3A	.CIRCUIT BREAKER-3A (VU0091)		1
B130-DAD	483TCG11J25-3A	.CIRCUIT BREAKER-3A (VU0091)		1
B131-DAD	483TCG11J25-5A	.CIRCUIT BREAKER-5A (VU0091)		1
B132-DAD	25-8NF2217-15	.CIRCUIT BREAKER-15AMP (ALTERED FROM 483-96TCK14-15A (VU0091))		1
B14-DAD	483TCG11J25-5A	.CIRCUIT BREAKER-5A (VU0091)		1
B15-DAD	483TCG11J25-5A	.CIRCUIT BREAKER-5A (VU0091)		1
B16-DAD	483TCG11J25-5A	.CIRCUIT BREAKER-5A (VU0091)		1
B17-DAD	483TCG11J25-5A	.CIRCUIT BREAKER-5A (VU0091)		1
B18-DAD	483TCG11J25-3A	.CIRCUIT BREAKER-3A (VU0091)		1
B19-DAD	483TCG11J25-3A	.CIRCUIT BREAKER-3A (VU0091)		1
		MISSING ITEM NO. NOT APPLICABLE		

- ITEM NOT ILLUSTRATED

IDENT	PART NUMBER	1234567 NOMENCLATURE	EFFECT FROM TO	UNITS PER ASSY
B2-GG	583-96TCK14-10A	.CIRCUIT BREAKER-10A (VU0091)		1
B2-ZK	583-96TCK14-10A	.CIRCUIT BREAKER-10A (VU0091)		1
B20-DAD	483TCG11J25-3A	.CIRCUIT BREAKER-3A (VU0091)		1
B21-DAD	483TCG11J25-5A	.CIRCUIT BREAKER-5A (VU0091)		1
B22-DAD	483TCG11J25-3A	.CIRCUIT BREAKER-3A (VU0091)		1
B23-DAD	483TCG11J25-3A	.CIRCUIT BREAKER-3A (VU0091)		1
B24-DAD	483TCG11J25-1A	.CIRCUIT BREAKER-1A (VU0091)		1
B25-DAD	483TCG11J25-3A	.CIRCUIT BREAKER-3A (VU0091)		1
B26-DAD	25-8NF2217-25	.CIRCUIT BREAKER-25AMP (ALTERED FROM 483-96TCK14-25A (VU0091))		1
B27-DAD	25-8NF2217-25	.CIRCUIT BREAKER-25AMP (ALTERED FROM 483-96TCK14-25A (VU0091))		1
B28-DAD	483TCG11J25-3A	.CIRCUIT BREAKER-3A (VU0091)		1
B30-DAD	483TCG11J25-5A	.CIRCUIT BREAKER-5A (VU0091)		1
B31-DAD	483TCG11J25-5A	.CIRCUIT BREAKER-5A (VU0091)		1
B32-DAD	SPARE	.SPARE-CIRCUIT BREAKER		1
B33-DAD	483TCG11J25-5A	.CIRCUIT BREAKER-5A (VU0091)		1
B34-DAD	483TCG11J25-1A	.CIRCUIT BREAKER-1A (VU0091)		1
B35-DAD	483TCG11J25-3A	.CIRCUIT BREAKER-3A (VU0091)		1
B36-DAD	25-8NF2217-25	.CIRCUIT BREAKER-25AMP (ALTERED FROM 483-96TCK14-25A (VU0091))		1
B37-DAD	25-8NF2217-25	.CIRCUIT BREAKER-25AMP (ALTERED FROM 483-96TCK14-25A (VU0091))		1
B38-DAD	483TCG11J25-3A	.CIRCUIT BREAKER-3A (VU0091)		1
B4-ZK	483TCG11J5-5A	.CIRCUIT BREAKER-5A (VU0091)		1
		MISSING ITEM NO. NOT APPLICABLE		

– ITEM NOT ILLUSTRATED

IDENT	PART NUMBER	1234567 NOMENCLATURE	EFFECT FROM TO	UNITS PER ASSY
B40-DAD	483TCG11J25-5A	.CIRCUIT BREAKER-5A (VU0091)		1
B41-DAD	483TCG11J25-3A	.CIRCUIT BREAKER-3A (VU0091)		1
B42-DAD	483TCG11J25-3A	.CIRCUIT BREAKER-3A (VU0091)		1
B43-DAD	483TCG11J25-3A	.CIRCUIT BREAKER-3A (VU0091)		1
B44-DAD	25-8NF2217-15	.CIRCUIT BREAKER-15AMP (ALTERED FROM 483-96TCK14-15A (VU0091))		1
B45-DAD	483TCG11J25-5A	.CIRCUIT BREAKER-5A (VU0091)		1
B46-DAD	483TCG11J25-2A	.CIRCUIT BREAKER-2A (VU0091)		1
B47-DAD	483TCG11J25-2A	.CIRCUIT BREAKER-2A (VU0091)		1
B48-DAD	483TCG11J25-3A	.CIRCUIT BREAKER-3A (VU0091)		1
B49-DAD	483TCG11J25-3A	.CIRCUIT BREAKER-3A (VU0091)		1
B5-GA	3TC2-35	.CIRCUIT BREAKER-35A (VK0142)		1
B50-DAD	483TCG11J25-5A	.CIRCUIT BREAKER-5A (VU0091)		1
B51-DAD	483TCG11J25-3A	.CIRCUIT BREAKER-3A (VU0091)		1
B52-DAD	483TCG11J25-3A	.CIRCUIT BREAKER-3A (VU0091)		1
B53-DAD	483TCG11J25-3A	.CIRCUIT BREAKER-3A (VU0091)		1
B54-DAD	25-8NF2217-15	.CIRCUIT BREAKER-15AMP (ALTERED FROM 483-96TCK14-15A (VU0091))		1
B55-DAD	483TCG11J25-5A	.CIRCUIT BREAKER-5A (VU0091)		1
B56-DAD	483TCG11J25-2A	.CIRCUIT BREAKER-2A (VU0091)		1
B57-DAD	483TCG11J25-2A	.CIRCUIT BREAKER-2A (VU0091)		1
B58-DAD	483TCG11J25-3A	.CIRCUIT BREAKER-3A (VU0091)		1
B59-DAD	483TCG11J25-3A	.CIRCUIT BREAKER-3A (VU0091)		1
B6-GA	3TC2-35	.CIRCUIT BREAKER-35A (VK0142)		1
B60-DAD	483TCG11J25-3A	.CIRCUIT BREAKER-3A (VU0091)		1
		MISSING ITEM NO. NOT APPLICABLE		

– ITEM NOT ILLUSTRATED

IDENT	PART NUMBER	1234567 NOMENCLATURE	EFFECT FROM TO	UNITS PER ASSY
B61-DAD	25-8NF2217-7	.CIRCUIT BREAKER-7.5AMP (ALTERED FROM 483-96TCK14-7-5A (VU0091))		1
B62-DAD	25-8NF2217-7	.CIRCUIT BREAKER-7.5AMP (ALTERED FROM 483-96TCK14-7-5A (VU0091))		1
B63-DAD	25-8NF2217-15	.CIRCUIT BREAKER-15AMP (ALTERED FROM 483-96TCK14-15A (VU0091))		1
B64-DAD	483TCG11J25-5A	.CIRCUIT BREAKER-5A (VU0091)		1
B65-DAD	SPARE	.SPARE-CIRCUIT BREAKER		1
B66-DAD	483TCG11J25-5A	.CIRCUIT BREAKER-5A (VU0091)		1
B67-DAD	483TCG11J25-3A	.CIRCUIT BREAKER-3A (VU0091)		1
B68-DAD	483TCG11J25-5A	.CIRCUIT BREAKER-5A (VU0091)		1
B69-DAD	483TCG11J25-3A	.CIRCUIT BREAKER-3A (VU0091)		1
B70-DAD	SPARE	.SPARE-CIRCUIT BREAKER		1
B71-DAD	483TCG11J25-5A	.CIRCUIT BREAKER-5A (VU0091)		1
B72-DAD	483TCG11J25-3A	.CIRCUIT BREAKER-3A (VU0091)		1
B73-DAD	25-8NF2217-15	.CIRCUIT BREAKER-15AMP (ALTERED FROM 483-96TCK14-15A (VU0091))		1
B74-DAD	483TCG11J25-5A	.CIRCUIT BREAKER-5A (VU0091)		1
B75-DAD	SPARE	.SPARE-CIRCUIT BREAKER		1
B76-DAD	483TCG11J25-5A	.CIRCUIT BREAKER-5A (VU0091)		1
B77-DAD	483TCG11J25-5A	.CIRCUIT BREAKER-5A (VU0091)		1
B78-DAD	483TCG11J25-5A	.CIRCUIT BREAKER-5A (VU0091)		1
B79-DAD	SPARE	.SPARE-CIRCUIT BREAKER		1
B80-DAD	SPARE	.SPARE-CIRCUIT BREAKER		1
B81-DAD	483TCG11J25-3A	.CIRCUIT BREAKER-3A (VU0091)		1
B82-DAD	483TCG11J25-3A	.CIRCUIT BREAKER-3A (VU0091)		1
B83-DAD	483TCG11J25-3A	.CIRCUIT BREAKER-3A (VU0091)		1
B84-DAD	SPARE	.SPARE-CIRCUIT BREAKER		1
		MISSING ITEM NO. NOT APPLICABLE		

– ITEM NOT ILLUSTRATED

IDENT	PART NUMBER	1234567 NOMENCLATURE	EFFECT FROM TO	UNITS PER ASSY
B85-DAD	483TCG11J25-3A	.CIRCUIT BREAKER-3A (VU0091)		1
B86-DAD	483TCG11J25-5A	.CIRCUIT BREAKER-5A (VU0091)		1
B87-DAD	483TCG11J25-5A	.CIRCUIT BREAKER-5A (VU0091)		1
B88-DAD	483TCG11J25-3A	.CIRCUIT BREAKER-3A (VU0091)		1
B89-DAD	483TCG11J25-3A	.CIRCUIT BREAKER-3A (VU0091)		1
B90-DAD	483TCG11J25-3A	.CIRCUIT BREAKER-3A (VU0091)		1
B91-DAD	483TCG11J25-3A	.CIRCUIT BREAKER-3A (VU0091)		1
B92-DAD	483TCG11J25-3A	.CIRCUIT BREAKER-3A (VU0091)		1
B93-DAD	483TCG11J25-3A	.CIRCUIT BREAKER-3A (VU0091)		1
B94-DAD	483TCG11J25-3A	.CIRCUIT BREAKER-3A (VU0091)		1
B95-DAD	SPARE	.SPARE-CIRCUIT BREAKER		1
B96-DAD	483TCG11J25-3A	.CIRCUIT BREAKER-3A (VU0091)		1
B97-DAD	483TCG11J25-3A	.CIRCUIT BREAKER-3A (VU0091)		1
B98-DAD	483TCG11J25-3A	.CIRCUIT BREAKER-3A (VU0091)		1
B99-DAD	483TCG11J25-3A	.CIRCUIT BREAKER-3A (VU0091)		1
D-XZ	25-8NF2371-31A	.HEATSINK ASSY- (COMPRISING DIODES: S6GN55 (VK1152))		1
DJ	422255-7	.BUNG- (VK1793)		1
E-GA	LDG150Y4	.CONTACTOR-35A (VK4358)		1
F1-GA	5920-99-0120076	.FUSE-5A (VK0657)		1
F1-GG	5920-99-0120074	.FUSE-2A (VK0657)		1
F1-XZ	5920-99-0120075	.FUSE-3A (VK0657)		1
F1-ZK	5920-99-0120075	.FUSE-3A (VK0657)		1
F1-ZKA	5920-99-0120076	.FUSE-5A (VK0657)		1
F1-ZL	5920-99-0120076	.FUSE-5A (VK0657)		1
		MISSING ITEM NO. NOT APPLICABLE		

- ITEM NOT ILLUSTRATED

IDENT	PART NUMBER	1234567 NOMENCLATURE	EFFECT FROM TO	UNITS PER ASSY
F10-DAC	5920-99-0120076	.FUSE-5A (VK0657)		1
F10-GG	5920-99-0120074	.FUSE-2A (VK0657)		1
F10-ZK	5920-99-0120075	.FUSE-3A (VK0657)		1
F10-ZKA	5920-99-0120075	.FUSE-3A (VK0657)		1
F10-ZL	5920-99-0120075	.FUSE-3A (VK0657)		1
F11-DAC	5920-99-0120075	.FUSE-3A (VK0657)		1
F11-GA	L1330A500	.FUSE-500A (VU0154)		1
F11-ZK	SPARE	.SPARE-FUSE		1
F11-ZL	5920-99-0120075	.FUSE-3A (VK0657)		1
F12-DAC	5920-99-0120075	.FUSE-3A (VK0657)		1
F12-GA	L1330A150	.FUSE-150A (VU0154)		1
F12-ZK	SPARE	.SPARE-FUSE		1
F12-ZL	5920-99-0120075	.FUSE-3A (VK0657)		1
F13-DAC	5920-99-0120075	.FUSE-3A (VK0657)		1
F13-GA	UAM100	.FUSE-100A (VK0672)		1
F13-ZK	5920-99-0120075	.FUSE-3A (VK0657)		1
F13-ZL	5920-99-0120075	.FUSE-3A (VK0657)		1
F14-DAC	5920-99-0120076	.FUSE-5A (VK0657)		1
F14-GA	UAM100	.FUSE-100A (VK0672)		1
F14-ZK	5920-99-0120075	.FUSE-3A (VK0657)		1
F14-ZL	5920-99-0120075	.FUSE-3A (VK0657)		1
F15-DAC	5920-99-0120075	.FUSE-3A (VK0657)		1
F15-GA	5920-99-0120075	.FUSE-3A (VK0657)		1
F15-ZK	5920-99-0120075	.FUSE-3A (VK0657)		1
F15-ZL	5920-99-0120074	.FUSE-2A (VK0657)		1
F16-DAC	5920-99-0120074	.FUSE-2A (VK0657)		1
		MISSING ITEM NO. NOT APPLICABLE		

– ITEM NOT ILLUSTRATED

IDENT	PART NUMBER	1234567 NOMENCLATURE	EFFECT FROM TO	UNITS PER ASSY
F16-GA	5920-99-0120075	.FUSE-3A (VK0657)		1
F16-ZK	5920-99-0120075	.FUSE-3A (VK0657)		1
F16-ZL	5920-99-0120075	.FUSE-3A (VK0657)		1
F17-DAC	5920-99-0120076	.FUSE-5A (VK0657)		1
F17-GA	5920-99-0120075	.FUSE-3A (VK0657)		1
F17-ZK	5920-99-0120075	.FUSE-3A (VK0657)		1
F17-ZL	5920-99-0120075	.FUSE-3A (VK0657)		1
F18-DAC	5920-99-0120076	.FUSE-5A (VK0657)		1
F18-ZK	5920-99-0120075	.FUSE-3A (VK0657)		1
F18-ZL	5920-99-0120075	.FUSE-3A (VK0657)		1
F19-DAC	5920-99-0120075	.FUSE-3A (VK0657)		1
F19-ZK	5920-99-0120075	.FUSE-3A (VK0657)		1
F19-ZL	5920-99-0120075	.FUSE-3A (VK0657)		1
F2-DAC	5920-99-0120075	.FUSE-3A (VK0657)		1
F2-GA	SPARE	.SPARE-FUSE 3A		1
F2-GG	5920-99-0120074	.FUSE-2A (VK0657)		1
F2-XZ	5920-99-0120075	.FUSE-3A (VK0657)		1
F2-ZK	5920-99-0120075	.FUSE-3A (VK0657)		1
F2-ZKA	5920-99-0120076	.FUSE-5A (VK0657)		1
F2-ZL	5920-99-0120076	.FUSE-5A (VK0657)		1
F20-DAC	5920-99-0120076	.FUSE-5A (VK0657)		1
F20-ZK	SPARE	.SPARE-FUSE		1
F20-ZL	5920-99-0120075	.FUSE-3A (VK0657)		1
F21-GA	L1330A500	.FUSE-500A (VU0154)		1
F21-ZK	5920-99-0120075	.FUSE-3A (VK0657)		1
F21-ZL	SPARE	.SPARE-FUSE		1
		MISSING ITEM NO. NOT APPLICABLE		

– ITEM NOT ILLUSTRATED

IDENT	PART NUMBER	1234567 NOMENCLATURE	EFFECT FROM TO	UNITS PER ASSY
F22-GA	L1330A150	.FUSE-150A (VU0154)		1
F22-ZK	5920-99-0120075	.FUSE-3A (VK0657)		1
F22-ZL	SPARE	.SPARE-FUSE		1
F23-GA	UAM100	.FUSE-100A (VK0672)		1
F23-ZK	SPARE	.SPARE-FUSE		1
F23-ZL	SPARE	.SPARE-FUSE		1
F24-GA	UAM100	.FUSE-100A (VK0672)		1
F24-ZK	SPARE	.SPARE-FUSE		1
F24-ZL	5920-99-0120075	.FUSE-3A (VK0657)		1
F25-GA	5920-99-0120075	.FUSE-3A (VK0657)		1
F25-ZK	SPARE	.SPARE-FUSE		1
F25-ZL	5920-99-0120075	.FUSE-3A (VK0657)		1
F26-GA	5920-99-0120075	.FUSE-3A (VK0657)		1
F26-ZK	SPARE	.SPARE-FUSE		1
F26-ZL	5920-99-0120075	.FUSE-3A (VK0657)		1
F27-GA	5920-99-0120075	.FUSE-3A (VK0657)		1
F27-ZK	5920-99-0120075	.FUSE-3A (VK0657)		1
F27-ZL	5920-99-0120075	.FUSE-3A (VK0657)		1
F28-GA	5920-99-0120075	.FUSE-3A (VK0657)		1
F28-ZK	SPARE	.SPARE-FUSE		1
F28-ZL	5920-99-0120075	.FUSE-3A (VK0657)		1
F29-GA	5920-99-0120076	.FUSE-5A (VK0657)		1
F29-ZK	5920-99-0120075	.FUSE-3A (VK0657)		1
F29-ZL	5920-99-0120078	.FUSE-10A (VK0657)		1
F3-DAC	5920-99-0120075	.FUSE-3A (VK0657)		1
F3-GA	5920-99-0120075	.FUSE-3A (VK0657)		1
F3-GG	5920-99-0120074	.FUSE-2A (VK0657)		1
F3-XZ	5920-99-0120075	.FUSE-3A (VK0657)		1
F3-ZK	SPARE	.SPARE-FUSE		1
		MISSING ITEM NO. NOT APPLICABLE		

— ITEM NOT ILLUSTRATED

IDENT	PART NUMBER	1234567 NOMENCLATURE	EFFECT FROM TO	UNITS PER ASSY
F3-ZKA	5920-99-0120075	.FUSE-3A (VK0657)		1
F3-ZL	5920-99-0120075	.FUSE-3A (VK0657)		1
F30-GA	5920-99-0120075	.FUSE-3A (VK0657)		1
F30-ZK	5920-99-0120075	.FUSE-3A (VK0657)		1
F30-ZL	5920-99-0120075	.FUSE-3A (VK0657)		1
F31-GA	SPARE	.SPARE-FUSE		1
F31-ZK	5920-99-0120075	.FUSE-3A (VK0657)		1
F31-ZL	UAM100	.FUSE-100A (VK0672)		1
F32-ZK	5920-99-0120075	.FUSE-3A (VK0657)		1
F32-ZL	UAM100	.FUSE-100A (VK0672)		1
F33-ZK	5920-99-0120075	.FUSE-3A (VK0657)		1
F33-ZL	5920-99-0120075	.FUSE-3A (VK0657)		1
F34-ZK	5920-99-0120075	.FUSE-3A (VK0657)		1
F34-ZL	5920-99-0120075	.FUSE-3A (VK0657)		1
F35-ZK	5920-99-0120075	.FUSE-3A (VK0657)		1
F35-ZL	5920-99-0120075	.FUSE-3A (VK0657)		1
F36-ZK	5920-99-0120075	.FUSE-3A (VK0657)		1
F36-ZL	5920-99-0120075	.FUSE-3A (VK0657)		1
F37-ZK	5920-99-0120075	.FUSE-3A (VK0657)		1
F37-ZL	5920-99-0120078	.FUSE-10A (VK0657)		1
F38-ZK	5920-99-0120075	.FUSE-3A (VK0657)		1
F39-ZK	5920-99-0120075	.FUSE-3A (VK0657)		1
F4-DAC	5920-99-0120075	.FUSE-3A (VK0657)		1
F4-GA	5920-99-0120075	.FUSE-3A (VK0657)		1
F4-GG	SPARE	.SPARE-FUSE		1
F4-XZ	5920-99-0120075	.FUSE-3A (VK0657)		1
		MISSING ITEM NO. NOT APPLICABLE		

– ITEM NOT ILLUSTRATED

IDENT	PART NUMBER	1234567 NOMENCLATURE	EFFECT FROM TO	UNITS PER ASSY
F4-ZK	SPARE	.SPARE-FUSE		1
F4-ZKA	5920-99-0120078	.FUSE-10A (VK0657)		1
F4-ZL	5920-99-0120075	.FUSE-3A (VK0657)		1
F40-ZK	5920-99-0120075	.FUSE-3A (VK0657)		1
F41-ZK	5920-99-0120075	.FUSE-3A (VK0657)		1
F42-ZK	5920-99-0120075	.FUSE-3A (VK0657)		1
F43-ZK	SPARE	.SPARE-FUSE		1
F44-ZK	SPARE	.SPARE-FUSE		1
F45-ZK	SPARE	.SPARE-FUSE		1
F46-ZK	5920-99-0120075	.FUSE-3A (VK0657)		1
F47-ZK	5920-99-0120075	.FUSE-3A (VK0657)		1
F48-ZK	5920-99-0120075	.FUSE-3A (VK0657)		1
F49-ZK	SPARE	.SPARE-FUSE		1
F5-DAC	5920-99-0120075	.FUSE-3A (VK0657)		1
F5-GG	SPARE	.SPARE-FUSE		1
F5-ZK	SPARE	.SPARE-FUSE		1
F5-ZKA	5920-99-0120076	.FUSE-5A (VK0657)		1
F5-ZL	5920-99-0120076	.FUSE-5A (VK0657)		1
F50-ZK	5920-99-0120075	.FUSE-3A (VK0657)		1
F51-ZK	5920-99-0120075	.FUSE-3A (VK0657)		1
F52-ZK	5920-99-0120075	.FUSE-3A (VK0657)		1
F53-ZK	5920-99-0120075	.FUSE-3A (VK0657)		1
F54-ZK	5920-99-0120075	.FUSE-3A (VK0657)		1
F55-ZK	5920-99-0120075	.FUSE-3A (VK0657)		1
F56-ZK	5920-99-0120075	.FUSE-3A (VK0657)		1
F57-ZK	5920-99-0120075	.FUSE-3A (VK0657)		1
F58-ZK	5920-99-0120075	.FUSE-3A (VK0657)		1
F59-ZK	5920-99-0120075	.FUSE-3A (VK0657)		1
		MISSING ITEM NO. NOT APPLICABLE		

– ITEM NOT ILLUSTRATED

IDENT	PART NUMBER	1234567 NOMENCLATURE	EFFECT FROM TO	UNITS PER ASSY
F6-DAC	5920-99-0120075	.FUSE-3A (VK0657)		1
F6-GG	SPARE	.SPARE-FUSE		1
F6-ZK	5920-99-0120075	.FUSE-3A (VK0657)		1
F6-ZKA	SPARE	.SPARE-FUSE		1
F6-ZL	5920-99-0120076	.FUSE-5A (VK0657)		1
F60-ZK	5920-99-0120075	.FUSE-3A (VK0657)		1
F61-ZK	5920-99-0120075	.FUSE-3A (VK0657)		1
F62-ZK	5920-99-0120075	.FUSE-3A (VK0657)		1
F63-ZK	5920-99-0120075	.FUSE-3A (VK0657)		1
F64-ZK	5920-99-0120075	.FUSE-3A (VK0657)		1
F65-ZK	5920-99-0120075	.FUSE-3A (VK0657)		1
F66-ZK	5920-99-0120075	.FUSE-3A (VK0657)		1
F67-ZK	5920-99-0120075	.FUSE-3A (VK0657)		1
F68-ZK	5920-99-0120074	.FUSE-2A (VK0657)		1
F69-ZK	5920-99-0120074	.FUSE-2A (VK0657)		1
F7-DAC	5920-99-0120075	.FUSE-3A (VK0657)		1
F7-GG	SPARE	.SPARE-FUSE		1
F7-ZK	5920-99-0120075	.FUSE-3A (VK0657)		1
F7-ZKA	SPARE	.SPARE-FUSE		1
F7-ZL	5920-99-0120079	.FUSE-15A (VK0657)		1
F70-ZK	5920-99-0120075	.FUSE-3A (VK0657)		1
F8-DAC	5920-99-0120075	.FUSE-3A (VK0657)		1
F8-GG	5920-99-0120074	.FUSE-2A (VK0657)		1
F8-ZK	5920-99-0120075	.FUSE-3A (VK0657)		1
F8-ZKA	5920-99-0120075	.FUSE-3A (VK0657)		1
F8-ZL	5920-99-0120075	.FUSE-3A (VK0657)		1
F9-DAC	5920-99-0120076	.FUSE-5A (VK0657)		1
		MISSING ITEM NO. NOT APPLICABLE		

– ITEM NOT ILLUSTRATED

IDENT	PART NUMBER	1234567 NOMENCLATURE	EFFECT FROM TO	UNITS PER ASSY
F9-GG	5920-99-0120074	.FUSE-2A (VK0657)		1
F9-ZK	SPARE	.SPARE-FUSE		1
F9-ZKA	5920-99-0120075	.FUSE-3A (VK0657)		1
F9-ZL	5920-99-0120075	.FUSE-3A (VK0657)		1
HN-DA	HWBUN1146S3B	.TERMINAL BLOCK- (VK0574)		1
HP-DA	HWBUN1146S3B	.TERMINAL BLOCK- (VK0574)		1
		MISSING ITEM NO. NOT APPLICABLE		

– ITEM NOT ILLUSTRATED

ZONE F3

PANEL DA

SUB PANEL D

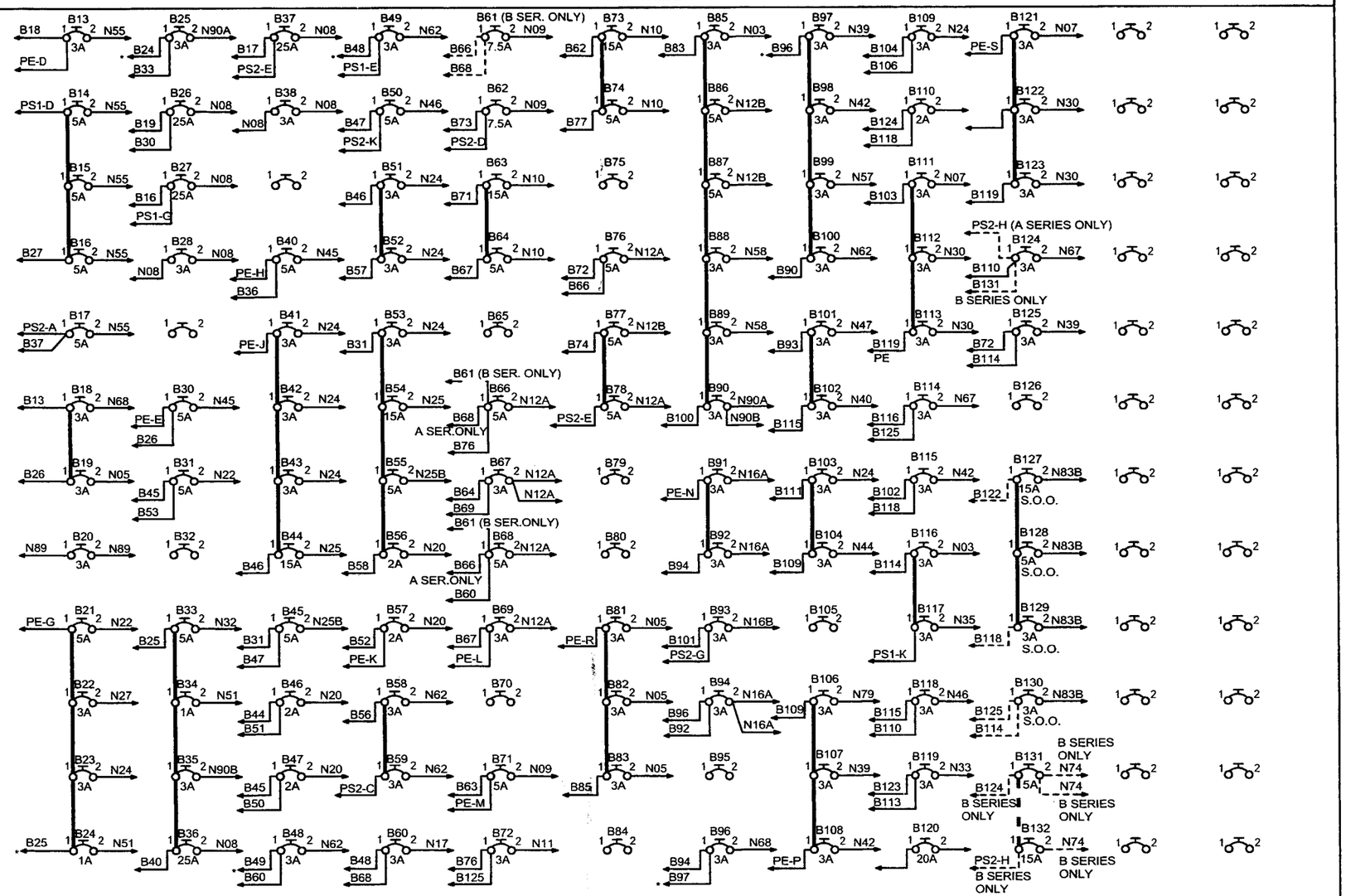

1. SYMBOL * DENOTES A SOLID LINK CONNECTION BETWEEN CIRCUIT BREAKERS EVEN THOUGH AN ARROW IS SHOWN.

2. ALL CIRCUIT BREAKER WIRE LINKS ARE TO BE SIZE 10 KP260 ANA TO SPEC S3200.

25-8NA5-1303B SH1
DWG ISS - 1

ART ID # HA00F890055AA

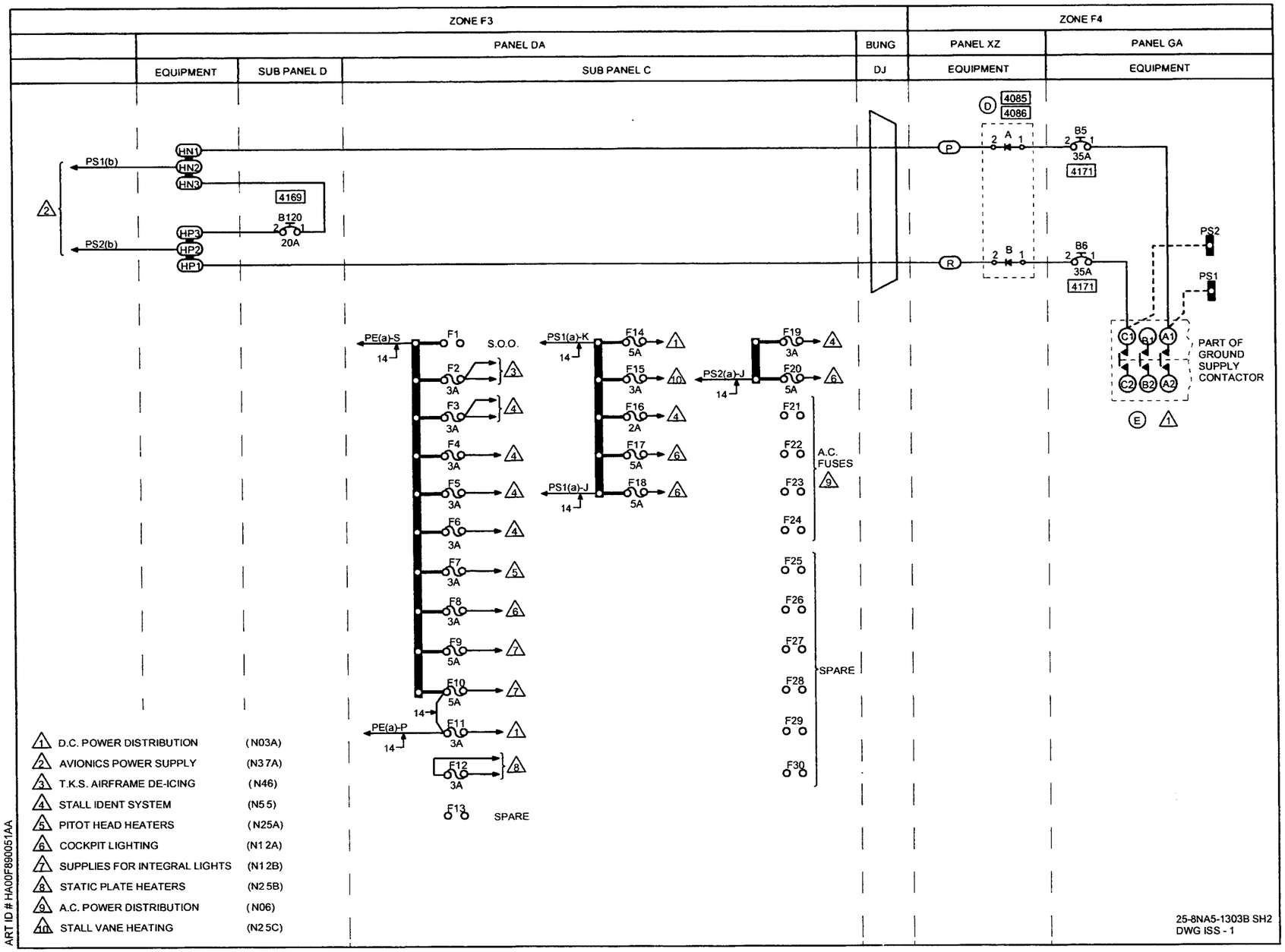
ZONE F3
ZONE F4
PANEL DA
BUNG
PANEL XZ
PANEL GA
EQUIPMENT
SUB PANEL D
SUB PANEL C
DJ
EQUIPMENT
EQUIPMENT
PS1(b)
PS2(b)
HN1
HN2
HN3
HP3
HP2
HP1
4169
B120
20A
4085
4086
B5
35A
4171
B6
35A
4171
PS2
PS1
PART OF GROUND SUPPLY CONTACTOR
PE(a)-S
PS1(a)-K
PS2(a)-J
PS1(a)-J
PE(a)-P
S.O.O.
A.C. FUSES
SPARE
SPARE
1 D.C. POWER DISTRIBUTION (N03A)
2 AVIONICS POWER SUPPLY (N37A)
3 T.K.S. AIRFRAME DE-ICING (N46)
4 STALL IDENT SYSTEM (N55)
5 PITOT HEAD HEATERS (N25A)
6 COCKPIT LIGHTING (N12A)
7 SUPPLIES FOR INTEGRAL LIGHTS (N12B)
8 STATIC PLATE HEATERS (N25B)
9 A.C. POWER DISTRIBUTION (N06)
10 STALL VANE HEATING (N25C)
ART ID # HA00F890051AA
25-8NA5-1303B SH2
DWG ISS - 1

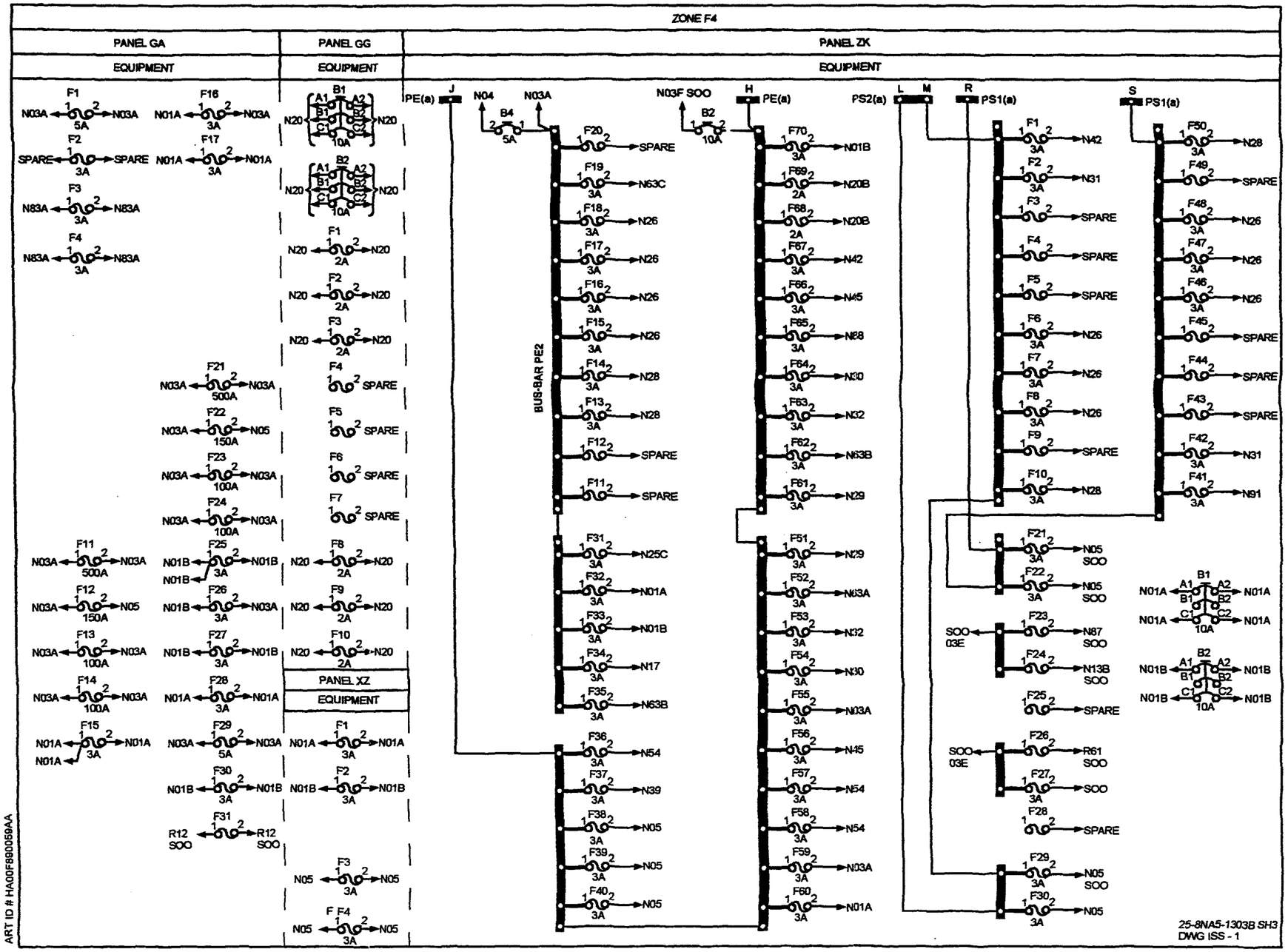
ZONE F4
PANEL GA
EQUIPMENT
PANEL GG
EQUIPMENT
PANEL ZK
EQUIPMENT
PANEL XZ
EQUIPMENT
BUS-BAR PE2
PE(a)
N04
N03A
N03F SOO
PE(a)
PS2(a)
PS1(a)
PS1(a)
25-8NA5-1303B SH3
DWG ISS - 1
ART ID # HA00F890059AA

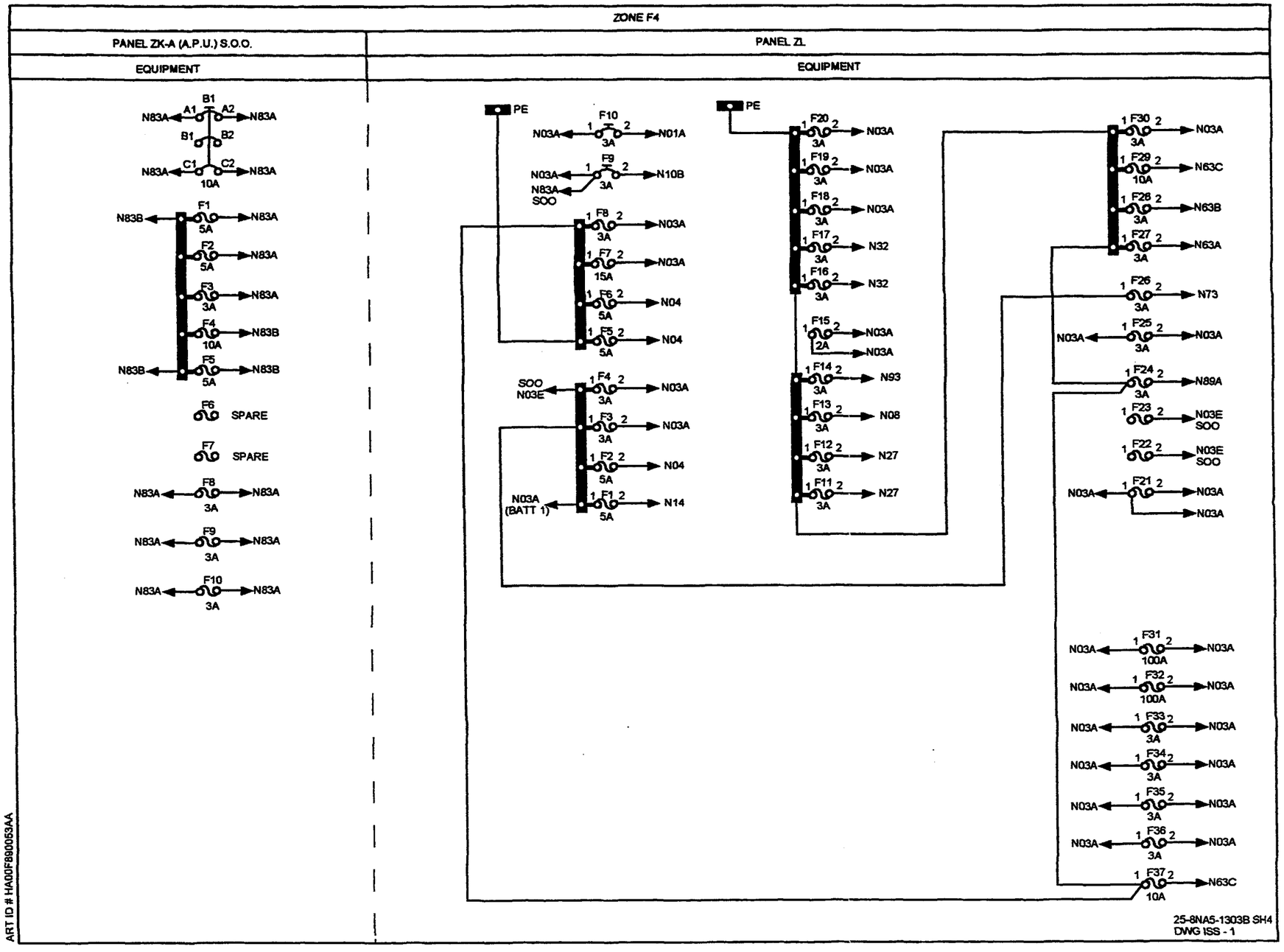
ZONE F4
PANEL ZK-A (A.P.U.) S.O.O.
PANEL ZL
EQUIPMENT
EQUIPMENT
B1 A1 A2 N83A N83A
B1 B2
N83A C1 C2 N83A
10A
F1 N83B N83A 5A
F2 N83A 5A
F3 N83A 3A
F4 N83B 10A
F5 N83B N83B 5A
F6 SPARE
F7 SPARE
F8 N83A N83A 3A
F9 N83A N83A 3A
F10 N83A N83A 3A
PE
F10 N03A N01A 3A
F9 N03A N83A SOO N10B 3A
F8 N03A 3A
F7 N03A 15A
F6 N04 5A
F5 N04 5A
F4 SOO N03E N03A 3A
F3 N03A 3A
F2 N04 5A
F1 N03A (BATT 1) N14 5A
PE
F20 N03A 3A
F19 N03A 3A
F18 N03A 3A
F17 N32 3A
F16 N32 3A
F15 N03A N03A 2A
F14 N93 3A
F13 N08 3A
F12 N27 3A
F11 N27 3A
F30 N03A 3A
F29 N63C 10A
F28 N63B 3A
F27 N63A 3A
F26 N73 3A
F25 N03A N03A 3A
F24 N89A 3A
F23 N03E SOO
F22 N03E SOO
F21 N03A N03A N03A
F31 N03A N03A 100A
F32 N03A N03A 100A
F33 N03A N03A 3A
F34 N03A N03A 3A
F35 N03A N03A 3A
F36 N03A N03A 3A
F37 N63C 10A
ART ID # HA00F890053AA
25-8NA5-1303B SH4
DWG ISS - 1

IDENT	PART NUMBER	1234567 NOMENCLATURE	EFFECT FROM TO	UNITS PER ASSY
		DC POWER DISTRIBUTION	094094 097097 102163 166166 168176 223223 225225 229232 234234 236236 238243 246252	
	25-8NA5-1303B	WIRING DIAGRAM- (MOD 253201B)		RF
A-D-XZ	S6GN55	.DIODE- (VK1152) (USED ON 25-8NF2371-31A)		1
B-D-XZ	S6GN55	.DIODE- (VK1152) (USED ON 25-8NF2371-31A)		1
B1-GG	583-96TCK14-10A	.CIRCUIT BREAKER-10A (VU0091)		1
B1-ZK	583-96TCK14-10A	.CIRCUIT BREAKER-10A (VU0091)		1
B1-ZKA	6TC14-10	.CIRCUIT BREAKER-10A (V82647)		1
B100-DAD	483TCG11J25-3A	.CIRCUIT BREAKER-3A (VU0091)		1
B101-DAD	483TCG11J25-3A	.CIRCUIT BREAKER-3A (VU0091)		1
B102-DAD	483TCG11J25-3A	.CIRCUIT BREAKER-3A (VU0091)		1
B103-DAD	483TCG11J25-3A	.CIRCUIT BREAKER-3A (VU0091)		1
B104-DAD	483TCG11J25-3A	.CIRCUIT BREAKER-3A (VU0091)		1
B105-DAD	SPARE	.SPARE-CIRCUIT BREAKER		1
B106-DAD	483TCG11J25-3A	.CIRCUIT BREAKER-3A (VU0091)		1
B107-DAD	483TCG11J25-3A	.CIRCUIT BREAKER-3A (VU0091)		1
B108-DAD	483TCG11J25-3A	.CIRCUIT BREAKER- (VU0091)		1
B109-DAD	483TCG11J25-3A	.CIRCUIT BREAKER-3A (VU0091)		1
B110-DAD	483TCG11J25-2A	.CIRCUIT BREAKER-2A (VU0091)		1
B111-DAD	483TCG11J25-3A	.CIRCUIT BREAKER-3A (VU0091)		1
		MISSING ITEM NO. NOT APPLICABLE		

– ITEM NOT ILLUSTRATED

IDENT	PART NUMBER	1234567 NOMENCLATURE	EFFECT FROM TO	UNITS PER ASSY
B112-DAD	483TCG11J25-3A	.CIRCUIT BREAKER-3A (VU0091)		1
B113-DAD	483TCG11J25-3A	.CIRCUIT BREAKER-3A (VU0091)		1
B114-DAD	483TCG11J25-3A	.CIRCUIT BREAKER-3A (VU0091)		1
B115-DAD	483TCG11J25-3A	.CIRCUIT BREAKER-3A (VU0091)		1
B116-DAD	483TCG11J25-3A	.CIRCUIT BREAKER-3A (VU0091)		1
B117-DAD	483TCG11J25-3A	.CIRCUIT BREAKER-3A (VU0091)		1
B118-DAD	483TCG11J25-3A	.CIRCUIT BREAKER-3A (VU0091)		1
B119-DAD	483TCG11J25-3A	.CIRCUIT BREAKER-3A (VU0091)		1
B120-DAD	25-8NF2217-20	.CIRCUIT BREAKER-20AMP (ALTERED FROM 483-96TCK14-20A (VU0091))		1
B121-DAD	483TCG11J25-3A	.CIRCUIT BREAKER-3A (VU0091)		1
B122-DAD	483TCG11J25-3A	.CIRCUIT BREAKER-3A (VU0091)		1
B123-DAD	483TCG11J25-3A	.CIRCUIT BREAKER-3A (VU0091)		1
B124-DAD	483TCG11J25-3A	.CIRCUIT BREAKER-3A (VU0091)		1
B125-DAD	483TCG11J25-3A	.CIRCUIT BREAKER-3A (VU0091)		1
B126-DAD	SPARE	.SPARE-CIRCUIT BREAKER		1
B127-DAD	25-8NF2217-15	.CIRCUIT BREAKER-15A (ALTERED FROM 483-96TCK14-15A (VU0091))		1
B128-DAD	483TCG11J25-5A	.CIRCUIT BREAKER-5A (VU0091)		1
B129-DAD	483TCG11J25-3A	.CIRCUIT BREAKER-3A (VU0091)		1
B13-DAD	483TCG11J25-3A	.CIRCUIT BREAKER-3A (VU0091)		1
B130-DAD	483TCG11J25-3A	.CIRCUIT BREAKER-3A (VU0091)		1
B131-DAD	483TCG11J25-5A	.CIRCUIT BREAKER-5A (VU0091)		1
B132-DAD	25-8NF2217-15	.CIRCUIT BREAKER-15A (ALTERED FROM 483-96TCK14-15A (VU0091))		1
		MISSING ITEM NO. NOT APPLICABLE		

– ITEM NOT ILLUSTRATED

IDENT	PART NUMBER	1234567 NOMENCLATURE	EFFECT FROM TO	UNITS PER ASSY
B14-DAD	483TCG11J25-5A	.CIRCUIT BREAKER-5A (VU0091)		1
B15-DAD	483TCG11J25-5A	.CIRCUIT BREAKER-5A (VU0091)		1
B16-DAD	483TCG11J25-5A	.CIRCUIT BREAKER-5A (VU0091)		1
B17-DAD	483TCG11J25-5A	.CIRCUIT BREAKER-5A (VU0091)		1
B18-DAD	483TCG11J25-3A	.CIRCUIT BREAKER-3A (VU0091)		1
B19-DAD	483TCG11J25-3A	.CIRCUIT BREAKER-3A (VU0091)		1
B2-GG	583-96TCK14-10A	.CIRCUIT BREAKER-10A (VU0091)		1
B2-ZK	583-96TCK14-10A	.CIRCUIT BREAKER-10A (VU0091)		1
B20-DAD	483TCG11J25-3A	.CIRCUIT BREAKER-3A (VU0091)		1
B21-DAD	483TCG11J25-5A	.CIRCUIT BREAKER-5A (VU0091)		1
B22-DAD	483TCG11J25-3A	.CIRCUIT BREAKER-3A (VU0091)		1
B23-DAD	483TCG11J25-3A	.CIRCUIT BREAKER-3A (VU0091)		1
B24-DAD	483TCG11J25-1A	.CIRCUIT BREAKER-1A (VU0091)		1
B25-DAD	483TCG11J25-3A	.CIRCUIT BREAKER-3A (VU0091)		1
B26-DAD	25-8NF2217-25	.CIRCUIT BREAKER-25AMP (ALTERED FROM 483-96TCK14-25A (VU0091))		1
B27-DAD	25-8NF2217-25	.CIRCUIT BREAKER-25AMP (ALTERED FROM 483-96TCK14-25A (VU0091))		1
B28-DAD	483TCG11J25-3A	.CIRCUIT BREAKER-3A (VU0091)		1
B30-DAD	483TCG11J25-5A	.CIRCUIT BREAKER-5A (VU0091)		1
B31-DAD	483TCG11J25-5A	.CIRCUIT BREAKER-5A (VU0091)		1
B32-DAD	SPARE	.SPARE-CIRCUIT BREAKER		1
B33-DAD	483TCG11J25-5A	.CIRCUIT BREAKER-5A (VU0091)		1
B34-DAD	483TCG11J25-1A	.CIRCUIT BREAKER-1A (VU0091)		1
B35-DAD	483TCG11J25-3A	.CIRCUIT BREAKER-3A (VU0091)		1
		MISSING ITEM NO. NOT APPLICABLE		

- ITEM NOT ILLUSTRATED

IDENT	PART NUMBER	1234567 NOMENCLATURE	EFFECT FROM TO	UNITS PER ASSY
B36-DAD	25-8NF2217-25	.CIRCUIT BREAKER-25AMP (ALTERED FROM 483-96TCK14-25A (VU0091))		1
B37-DAD	25-8NF2217-25	.CIRCUIT BREAKER-25AMP (ALTERED FROM 483-96TCK14-25A (VU0091))		1
B38-DAD	483TCG11J25-3A	.CIRCUIT BREAKER-3A (VU0091)		1
B4-ZK	483TCG11J5-5A	.CIRCUIT BREAKER-5A (VU0091)		1
B40-DAD	483TCG11J25-5A	.CIRCUIT BREAKER-5A (VU0091)		1
B41-DAD	483TCG11J25-3A	.CIRCUIT BREAKER-3A (VU0091)		1
B42-DAD	483TCG11J25-3A	.CIRCUIT BREAKER-3A (VU0091)		1
B43-DAD	483TCG11J25-3A	.CIRCUIT BREAKER-3A (VU0091)		1
B44-DAD	25-8NF2217-15	.CIRCUIT BREAKER-15A (ALTERED FROM 483-96TCK14-15A (VU0091))		1
B45-DAD	483TCG11J25-5A	.CIRCUIT BREAKER-5A (VU0091)		1
B46-DAD	483TCG11J25-2A	.CIRCUIT BREAKER-2A (VU0091)		1
B47-DAD	483TCG11J25-2A	.CIRCUIT BREAKER-2A (VU0091)		1
B48-DAD	483TCG11J25-3A	.CIRCUIT BREAKER-3A (VU0091)		1
B49-DAD	483TCG11J25-3A	.CIRCUIT BREAKER-3A (VU0091)		1
B5-GA	3TC2-35	.CIRCUIT BREAKER-35A (VK0142)		1
B50-DAD	483TCG11J25-5A	.CIRCUIT BREAKER-5A (VU0091)		1
B51-DAD	483TCG11J25-3A	.CIRCUIT BREAKER-3A (VU0091)		1
B52-DAD	483TCG11J25-3A	.CIRCUIT BREAKER-3A (VU0091)		1
B53-DAD	483TCG11J25-3A	.CIRCUIT BREAKER-3A (VU0091)		1
B54-DAD	25-8NF2217-15	.CIRCUIT BREAKER-15A (ALTERED FROM 483-96TCK14-15A (VU0091))		1
B55-DAD	483TCG11J25-5A	.CIRCUIT BREAKER-5A (VU0091)		1
		MISSING ITEM NO. NOT APPLICABLE		

– ITEM NOT ILLUSTRATED

IDENT	PART NUMBER	1234567 NOMENCLATURE	EFFECT FROM TO	UNITS PER ASSY
B56-DAD	483TCG11J25-2A	.CIRCUIT BREAKER-2A (VU0091)		1
B57-DAD	483TCG11J25-2A	.CIRCUIT BREAKER-2A (VU0091)		1
B58-DAD	483TCG11J25-3A	.CIRCUIT BREAKER-3A (VU0091)		1
B59-DAD	483TCG11J25-3A	.CIRCUIT BREAKER-3A (VU0091)		1
B6-GA	3TC2-35	.CIRCUIT BREAKER-35A (VK0142)		1
B60-DAD	483TCG11J25-3A	.CIRCUIT BREAKER-3A (VU0091)		1
B61-DAD	25-8NF2217-7	.CIRCUIT BREAKER-7.5AMP (ALTERED FROM 483-96TCK14-7-5A (VU0091))	094094 097097 106106 109110 112112 115116 118118 120120 130131 143143 146146 148149	1
B62-DAD	25-8NF2217-7	.CIRCUIT BREAKER-7.5AMP (ALTERED FROM 483-96TCK14-7-5A (VU0091))		1
B63-DAD	25-8NF2217-15	.CIRCUIT BREAKER-15A (ALTERED FROM 483-96TCK14-15A (VU0091))		1
B64-DAD	483TCG11J25-5A	.CIRCUIT BREAKER-5A (VU0091)		1
B65-DAD	SPARE	.SPARE-CIRCUIT BREAKER		1
B66-DAD	483TCG11J25-5A	.CIRCUIT BREAKER-5A (VU0091)		1
B67-DAD	483TCG11J25-3A	.CIRCUIT BREAKER-3A (VU0091)		1
B68-DAD	483TCG11J25-5A	.CIRCUIT BREAKER-5A (VU0091)		1
B69-DAD	483TCG11J25-3A	.CIRCUIT BREAKER-3A (VU0091)		1
B70-DAD	SPARE	.SPARE-CIRCUIT BREAKER		1
B71-DAD	483TCG11J25-5A	.CIRCUIT BREAKER-5A (VU0091)		1
B72-DAD	483TCG11J25-3A	.CIRCUIT BREAKER-3A (VU0091)		1
		MISSING ITEM NO. NOT APPLICABLE		

– ITEM NOT ILLUSTRATED

IDENT	PART NUMBER	1234567 NOMENCLATURE	EFFECT FROM TO	UNITS PER ASSY
B73-DAD	25-8NF2217-15	.CIRCUIT BREAKER-15A (ALTERED FROM 483-96TCK14-15A (VU0091))		1
B74-DAD	483TCG11J25-5A	.CIRCUIT BREAKER-5A (VU0091)		1
B75-DAD	SPARE	.SPARE-CIRCUIT BREAKER		1
B76-DAD	483TCG11J25-5A	.CIRCUIT BREAKER-5A (VU0091)		1
B77-DAD	483TCG11J25-5A	.CIRCUIT BREAKER-5A (VU0091)		1
B78-DAD	483TCG11J25-5A	.CIRCUIT BREAKER-5A (VU0091)		1
B79-DAD	SPARE	.SPARE-CIRCUIT BREAKER		1
B80-DAD	SPARE	.SPARE-CIRCUIT BREAKER		1
B81-DAD	483TCG11J25-3A	.CIRCUIT BREAKER-3A (VU0091)		1
B82-DAD	483TCG11J25-3A	.CIRCUIT BREAKER-3A (VU0091)		1
B83-DAD	483TCG11J25-3A	.CIRCUIT BREAKER-3A (VU0091)		1
B84-DAD	SPARE	.SPARE-CIRCUIT BREAKER		1
B85-DAD	483TCG11J25-3A	.CIRCUIT BREAKER-3A (VU0091)		1
B86-DAD	483TCG11J25-5A	.CIRCUIT BREAKER-5A (VU0091)		1
B87-DAD	483TCG11J25-5A	.CIRCUIT BREAKER-5A (VU0091)		1
B88-DAD	483TCG11J25-3A	.CIRCUIT BREAKER-3A (VU0091)		1
B89-DAD	483TCG11J25-3A	.CIRCUIT BREAKER-3A (VU0091)		1
B90-DAD	483TCG11J25-3A	.CIRCUIT BREAKER-3A (VU0091)		1
B91-DAD	483TCG11J25-3A	.CIRCUIT BREAKER-3A (VU0091)		1
B92-DAD	483TCG11J25-3A	.CIRCUIT BREAKER-3A (VU0091)		1
B93-DAD	483TCG11J25-3A	.CIRCUIT BREAKER-3A (VU0091)		1
B94-DAD	483TCG11J25-3A	.CIRCUIT BREAKER-3A (VU0091)		1
B95-DAD	SPARE	.SPARE-CIRCUIT BREAKER		1
B96-DAD	483TCG11J25-3A	.CIRCUIT BREAKER-3A (VU0091)		1
B97-DAD	483TCG11J25-3A	.CIRCUIT BREAKER-3A (VU0091)		1
B98-DAD	483TCG11J25-3A	.CIRCUIT BREAKER-3A (VU0091)		1
		MISSING ITEM NO. NOT APPLICABLE		

– ITEM NOT ILLUSTRATED

IDENT	PART NUMBER	1234567 NOMENCLATURE	EFFECT FROM TO	UNITS PER ASSY
B99-DAD	483TCG11J25-3A	.CIRCUIT BREAKER-3A (VU0091)		1
D-XZ	25-8NF2371-31A	.HEATSINK ASSY- (COMPRISING DIODES: S6GN55 (VK1152))		1
DJ	422255-7	.BUNG- (VK1793)		1
E-GA	LDG150Y4	.CONTACTOR- (VK4358)		1
F1-DAC	SPARE	.SPARE-FUSE		1
F1-GA	5920-99-0120076	.FUSE-5A (VK0657)		1
F1-GG	5920-99-0120074	.FUSE-2A (VK0657)		1
F1-XZ	5920-99-0120075	.FUSE-3A (VK0657)		1
F1-ZK	5920-99-0120075	.FUSE-3A (VK0657)		1
F1-ZKA	5920-99-0120076	.FUSE-5A (VK0657)		1
F1-ZL	5920-99-0120076	.FUSE-5A (VK0657)		1
F10-DAC	5920-99-0120076	.FUSE-5A (VK0657)		1
F10-GG	5920-99-0120074	.FUSE-2A (VK0657)		1
F10-ZK	5920-99-0120075	.FUSE-3A (VK0657)		1
F10-ZKA	5920-99-0120075	.FUSE-3A (VK0657)		1
F10-ZL	5920-99-0120075	.FUSE-3A (VK0657)		1
F11-DAC	5920-99-0120075	.FUSE-3A (VK0657)		1
F11-GA	L1330A500	.FUSE-500A (VU0154)		1
F11-ZK	SPARE	.SPARE-FUSE		1
F11-ZL	5920-99-0120075	.FUSE-3A (VK0657)		1
F12-DAC	5920-99-0120075	.FUSE-3A (VK0657)		1
F12-GA	L1330A150	.FUSE-150A (VU0154)		1
F12-ZK	SPARE	.SPARE-FUSE		1
F12-ZL	5920-99-0120075	.FUSE-3A (VK0657)		1
F13-GA	UAM100	.FUSE-100A (VK0672)		1
		MISSING ITEM NO. NOT APPLICABLE		

– ITEM NOT ILLUSTRATED

IDENT	PART NUMBER	1234567 NOMENCLATURE	EFFECT FROM TO	UNITS PER ASSY
F13-ZK	5920-99-0120075	.FUSE-3A (VK0657)		1
F13-ZL	5920-99-0120075	.FUSE-3A (VK0657)		1
F14-DAC	5920-99-0120076	.FUSE-5A (VK0657)		1
F14-GA	UAM100	.FUSE-100A (VK0672)		1
F14-ZK	5920-99-0120075	.FUSE-3A (VK0657)		1
F14-ZL	5920-99-0120075	.FUSE-3A (VK0657)		1
F15-DAC	5920-99-0120075	.FUSE-3A (VK0657)		1
F15-GA	5920-99-0120075	.FUSE-3A (VK0657)		1
F15-ZK	5920-99-0120075	.FUSE-3A (VK0657)		1
F15-ZL	5920-99-0120074	.FUSE-2A (VK0657)		1
F16-DAC	5920-99-0120074	.FUSE-2A (VK0657)		1
F16-GA	5920-99-0120075	.FUSE-3A (VK0657)		1
F16-ZK	5920-99-0120075	.FUSE-3A (VK0657)		1
F16-ZL	5920-99-0120075	.FUSE-3A (VK0657)		1
F17-DAC	5920-99-0120076	.FUSE-5A (VK0657)		1
F17-GA	5920-99-0120075	.FUSE-3A (VK0657)		1
F17-ZK	5920-99-0120075	.FUSE-3A (VK0657)		1
F17-ZL	5920-99-0120075	.FUSE-3A (VK0657)		1
F18-DAC	5920-99-0120076	.FUSE-5A (VK0657)		1
F18-ZK	5920-99-0120075	.FUSE-3A (VK0657)		1
F18-ZL	5920-99-0120075	.FUSE-3A (VK0657)		1
F19-DAC	5920-99-0120075	.FUSE-3A (VK0657)		1
F19-ZK	5920-99-0120075	.FUSE-3A (VK0657)		1
F19-ZL	5920-99-0120075	.FUSE-3A (VK0657)		1
F2-DAC	5920-99-0120075	.FUSE-3A (VK0657)		1
		MISSING ITEM NO. NOT APPLICABLE		

– ITEM NOT ILLUSTRATED

IDENT	PART NUMBER	1234567 NOMENCLATURE	EFFECT FROM TO	UNITS PER ASSY
F2-GA	SPARE	.SPARE-FUSE 3A		1
F2-GG	5920-99-0120074	.FUSE-2A (VK0657)		1
F2-XZ	5920-99-0120075	.FUSE-3A (VK0657)		1
F2-ZK	5920-99-0120075	.FUSE-3A (VK0657)		1
F2-ZKA	5920-99-0120076	.FUSE-5A (VK0657)		1
F2-ZL	5920-99-0120076	.FUSE-5A (VK0657)		1
F20-DAC	5920-99-0120076	.FUSE-5A (VK0657)		1
F20-ZK	SPARE	.SPARE-FUSE		1
F20-ZL	5920-99-0120075	.FUSE-3A (VK0657)		1
F21-GA	L1330A500	.FUSE-500A (VU0154)		1
F21-ZK	5920-99-0120075	.FUSE-3A (VK0657)		1
F21-ZL	SPARE	.SPARE-FUSE		1
F22-GA	L1330A150	.FUSE-150A (VU0154)		1
F22-ZK	5920-99-0120075	.FUSE-3A (VK0657)		1
F22-ZL	SPARE	.SPARE-FUSE		1
F23-GA	UAM100	.FUSE-100A (VK0672)		1
F23-ZK	SPARE	.SPARE-FUSE		1
F23-ZL	SPARE	.SPARE-FUSE		1
F24-GA	UAM100	.FUSE-100A (VK0672)		1
F24-ZK	SPARE	.SPARE-FUSE		1
F24-ZL	5920-99-0120075	.FUSE-3A (VK0657)		1
F25-GA	5920-99-0120075	.FUSE-3A (VK0657)		1
F25-ZK	SPARE	.SPARE-FUSE		1
F25-ZL	5920-99-0120075	.FUSE-3A (VK0657)		1
F26-GA	5920-99-0120075	.FUSE-3A (VK0657)		1
F26-ZK	SPARE	.SPARE-FUSE		1
F26-ZL	5920-99-0120075	.FUSE-3A (VK0657)		1
F27-GA	5920-99-0120075	.FUSE-3A (VK0657)		1
F27-ZK	SPARE	.SPARE-FUSE 3A		1
F27-ZL	5920-99-0120075	.FUSE-3A (VK0657)		1
		MISSING ITEM NO. NOT APPLICABLE		

– ITEM NOT ILLUSTRATED

IDENT	PART NUMBER	1234567 NOMENCLATURE	EFFECT FROM TO	UNITS PER ASSY
F28-GA	5920-99-0120075	.FUSE-3A (VK0657)		1
F28-ZK	SPARE	.SPARE-FUSE		1
F28-ZL	5920-99-0120075	.FUSE-3A (VK0657)		1
F29-GA	5920-99-0120076	.FUSE-5A (VK0657)		1
F29-ZK	5920-99-0120075	.FUSE-3A (VK0657)		1
F29-ZL	5920-99-0120078	.FUSE-10A (VK0657)		1
F3-DAC	5920-99-0120075	.FUSE-3A (VK0657)		1
F3-GA	5920-99-0120075	.FUSE-3A (VK0657)		1
F3-GG	5920-99-0120074	.FUSE-2A (VK0657)		1
F3-XZ	5920-99-0120075	.FUSE-3A (VK0657)		1
F3-ZK	SPARE	.SPARE-FUSE		1
F3-ZKA	5920-99-0120075	.FUSE-3A (VK0657)		1
F3-ZL	5920-99-0120075	.FUSE-3A (VK0657)		1
F30-GA	5920-99-0120075	.FUSE-3A (VK0657)		1
F30-ZK	5920-99-0120075	.FUSE-3A (VK0657)		1
F30-ZL	5920-99-0120075	.FUSE-3A (VK0657)		1
F31-GA	SPARE	.SPARE-FUSE		1
F31-ZK	5920-99-0120075	.FUSE-3A (VK0657)		1
F31-ZL	UAM100	.FUSE-100A (VK0672)		1
F32-ZK	5920-99-0120075	.FUSE-3A (VK0657)		1
F32-ZL	UAM100	.FUSE-100A (VK0672)		1
F33-ZK	5920-99-0120075	.FUSE-3A (VK0657)		1
F33-ZL	5920-99-0120075	.FUSE-3A (VK0657)		1
F34-ZK	5920-99-0120075	.FUSE-3A (VK0657)		1
F34-ZL	5920-99-0120075	.FUSE-3A (VK0657)		1
F35-ZK	5920-99-0120075	.FUSE-3A (VK0657)		1
		MISSING ITEM NO. NOT APPLICABLE		

– ITEM NOT ILLUSTRATED

IDENT	PART NUMBER	1234567 NOMENCLATURE	EFFECT FROM TO	UNITS PER ASSY
F35-ZL	5920-99-0120075	.FUSE-3A (VK0657)		1
F36-ZK	5920-99-0120075	.FUSE-3A (VK0657)		1
F36-ZL	5920-99-0120075	.FUSE-3A (VK0657)		1
F37-ZK	5920-99-0120075	.FUSE-3A (VK0657)		1
F37-ZL	5920-99-0120078	.FUSE-10A (VK0657)		1
F38-ZK	5920-99-0120075	.FUSE-3A (VK0657)		1
F39-ZK	5920-99-0120075	.FUSE-3A (VK0657)		1
F4-DAC	5920-99-0120075	.FUSE-3A (VK0657)		1
F4-GA	5920-99-0120075	.FUSE-3A (VK0657)		1
F4-GG	SPARE	.SPARE-FUSE		1
F4-XZ	5920-99-0120075	.FUSE-3A (VK0657)		1
F4-ZK	SPARE	.SPARE-FUSE		1
F4-ZKA	5920-99-0120078	.FUSE-10A (VK0657)		1
F4-ZL	5920-99-0120075	.FUSE-3A (VK0657)		1
F40-ZK	5920-99-0120075	.FUSE-3A (VK0657)		1
F41-ZK	5920-99-0120075	.FUSE-3A (VK0657)		1
F42-ZK	5920-99-0120075	.FUSE-3A (VK0657)		1
F43-ZK	SPARE	.SPARE-FUSE		1
F44-ZK	SPARE	.SPARE-FUSE		1
F45-ZK	SPARE	.SPARE-FUSE		1
F46-ZK	5920-99-0120075	.FUSE-3A (VK0657)		1
F47-ZK	5920-99-0120075	.FUSE-3A (VK0657)		1
F48-ZK	5920-99-0120075	.FUSE-3A (VK0657)		1
F49-ZK	SPARE	.SPARE-FUSE		1
F5-DAC	5920-99-0120075	.FUSE-3A (VK0657)		1
F5-GG	SPARE	.SPARE-FUSE		1
F5-ZK	SPARE	.SPARE-FUSE		1
F5-ZKA	5920-99-0120076	.FUSE-5A (VK0657)		1
F5-ZL	5920-99-0120076	.FUSE-5A (VK0657)		1
		MISSING ITEM NO. NOT APPLICABLE		

– ITEM NOT ILLUSTRATED

IDENT	PART NUMBER	1234567 NOMENCLATURE	EFFECT FROM TO	UNITS PER ASSY
F50-ZK	5920-99-0120075	.FUSE-3A (VK0657)		1
F51-ZK	5920-99-0120075	.FUSE-3A (VK0657)		1
F52-ZK	5920-99-0120075	.FUSE-3A (VK0657)		1
F53-ZK	5920-99-0120075	.FUSE-3A (VK0657)		1
F54-ZK	5920-99-0120075	.FUSE-3A (VK0657)		1
F55-ZK	5920-99-0120075	.FUSE-3A (VK0657)		1
F56-ZK	5920-99-0120075	.FUSE-3A (VK0657)		1
F57-ZK	5920-99-0120075	.FUSE-3A (VK0657)		1
F58-ZK	5920-99-0120075	.FUSE-3A (VK0657)		1
F59-ZK	5920-99-0120075	.FUSE-3A (VK0657)		1
F6-DAC	5920-99-0120075	.FUSE-3A (VK0657)		1
F6-GG	SPARE	.SPARE-FUSE		1
F6-ZK	5920-99-0120075	.FUSE-3A (VK0657)		1
F6-ZKA	SPARE	.SPARE-FUSE		1
F6-ZL	5920-99-0120076	.FUSE-5A (VK0657)		1
F60-ZK	5920-99-0120075	.FUSE-3A (VK0657)		1
F61-ZK	5920-99-0120075	.FUSE-3A (VK0657)		1
F62-ZK	5920-99-0120075	.FUSE-3A (VK0657)		1
F63-ZK	5920-99-0120075	.FUSE-3A (VK0657)		1
F64-ZK	5920-99-0120075	.FUSE-3A (VK0657)		1
F65-ZK	5920-99-0120075	.FUSE-3A (VK0657)		1
F66-ZK	5920-99-0120075	.FUSE-3A (VK0657)		1
F67-ZK	5920-99-0120075	.FUSE-3A (VK0657)		1
F68-ZK	5920-99-0120074	.FUSE-2A (VK0657)		1
F69-ZK	5920-99-0120074	.FUSE-2A (VK0657)		1
F7-DAC	5920-99-0120075	.FUSE-3A (VK0657)		1
		MISSING ITEM NO. NOT APPLICABLE		

– ITEM NOT ILLUSTRATED

IDENT	PART NUMBER	1234567 NOMENCLATURE	EFFECT FROM TO	UNITS PER ASSY
F7-GG	SPARE	.SPARE-FUSE		1
F7-ZK	5920-99-0120075	.FUSE-3A (VK0657)		1
F7-ZKA	SPARE	.SPARE-FUSE		1
F7-ZL	5920-99-0120079	.FUSE-15A (VK0657)		1
F70-ZK	5920-99-0120075	.FUSE-3A (VK0657)		1
F8-DAC	5920-99-0120075	.FUSE-3A (VK0657)		1
F8-GG	5920-99-0120074	.FUSE-2A (VK0657)		1
F8-ZK	5920-99-0120075	.FUSE-3A (VK0657)		1
F8-ZKA	5920-99-0120075	.FUSE-3A (VK0657)		1
F8-ZL	5920-99-0120075	.FUSE-3A (VK0657)		1
F9-DAC	5920-99-0120076	.FUSE-5A (VK0657)		1
F9-GG	5920-99-0120074	.FUSE-2A (VK0657)		1
F9-ZK	SPARE	.SPARE-FUSE		1
F9-ZKA	5920-99-0120075	.FUSE-3A (VK0657)		1
F9-ZL	5920-99-0120075	.FUSE-3A (VK0657)		1
HN-DA	HWBUN1146S3B	.TERMINAL BLOCK- (VK0574)		1
HP-DA	HWBUN1146S3B	.TERMINAL BLOCK- (VK0574)		1
		MISSING ITEM NO. NOT APPLICABLE		

– ITEM NOT ILLUSTRATED

ZONE F3

PANEL DA

SUB PANEL D

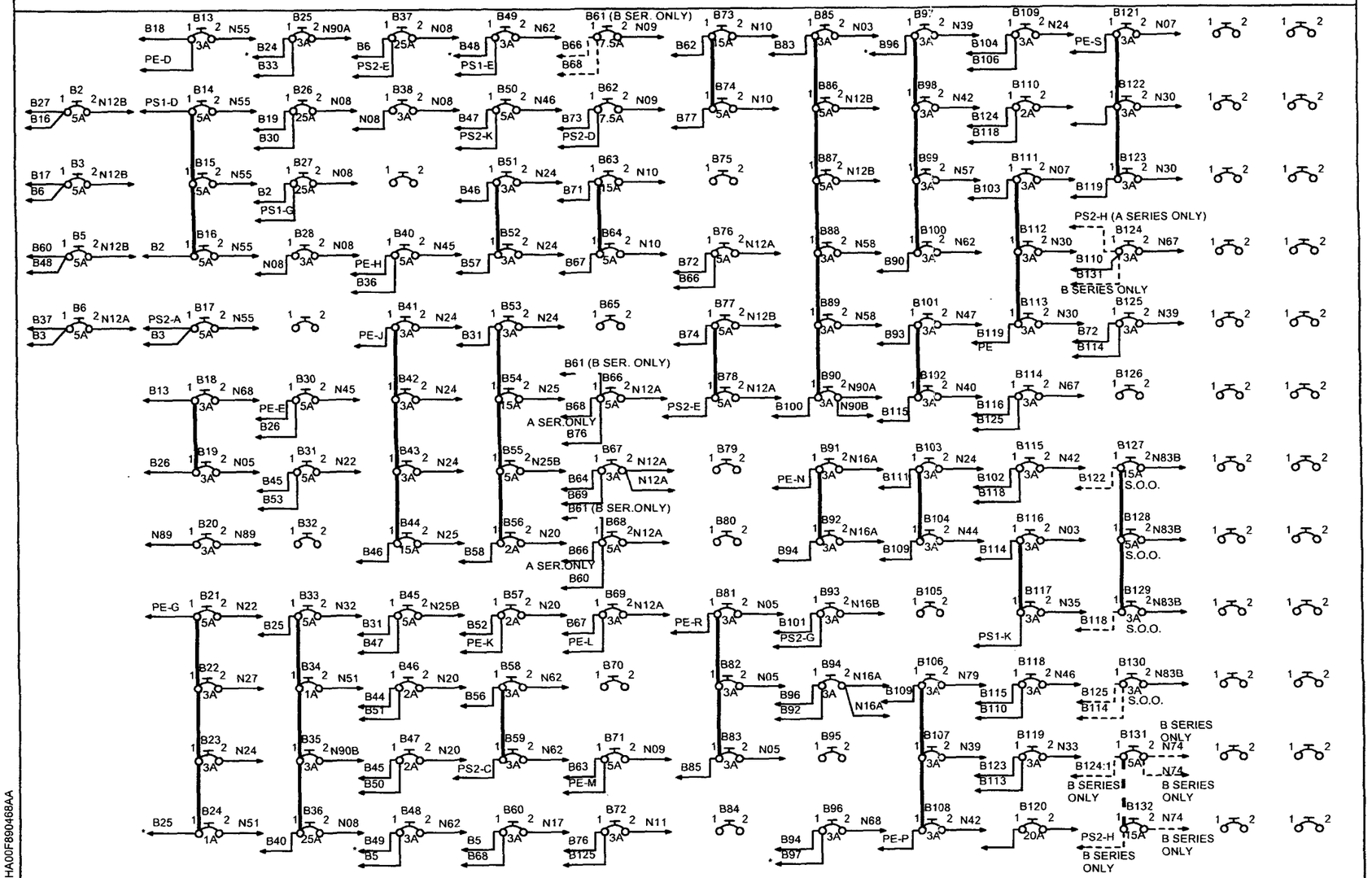

1. SYMBOL * DENOTES A SOLID LINK CONNECTION BETWEEN CIRCUIT BREAKERS EVEN THOUGH AN ARROW IS SHOWN.

2. ALL CIRCUIT BREAKER WIRE LINKS ARE TO BE SIZE 10 KP260 ANA TO SPEC S3200.

25-8NA5-1403B SH 1
DWG ISS -2

ART ID # HA00F890468AA

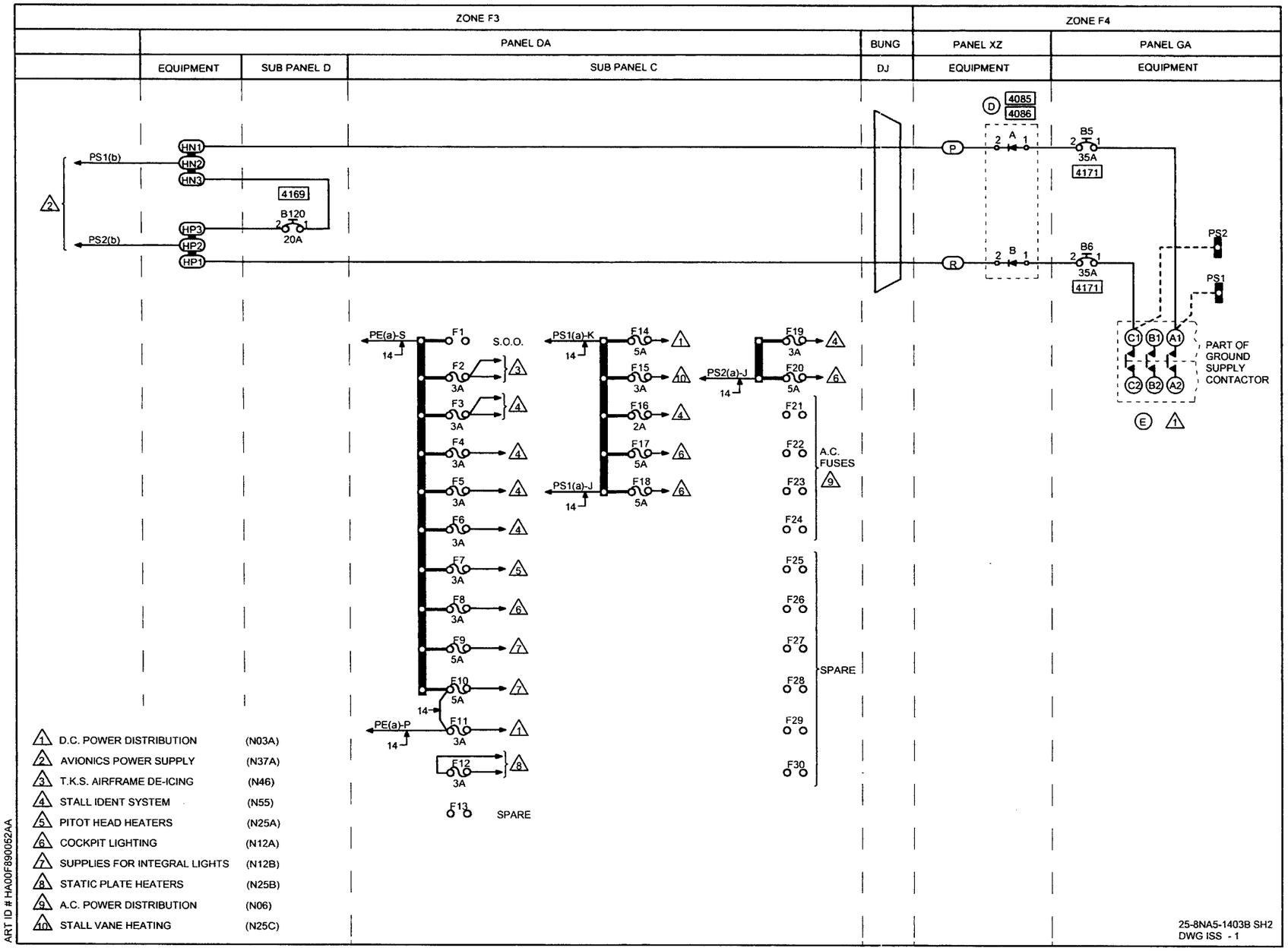
ZONE F3
ZONE F4
PANEL DA
BUNG
PANEL XZ
PANEL GA
EQUIPMENT
SUB PANEL D
SUB PANEL C
DJ
EQUIPMENT
EQUIPMENT
PS1(b)
PS2(b)
HN1
HN2
HN3
HP3
HP2
HP1
4169
B120
20A
4085
4086
B5
35A
4171
B6
35A
4171
PS2
PS1
C1 B1 A1
C2 B2 A2
PART OF GROUND SUPPLY CONTACTOR
PE(a)-S
PS1(a)-K
PS1(a)-J
PS2(a)-J
PE(a)-P
S.O.O.
F1 F2 F3 F4 F5 F6 F7 F8 F9 F10 F11 F12 F13
F14 F15 F16 F17 F18
F19 F20 F21 F22 F23 F24 F25 F26 F27 F28 F29 F30
A.C. FUSES
SPARE
SPARE
1 D.C. POWER DISTRIBUTION (N03A)
2 AVIONICS POWER SUPPLY (N37A)
3 T.K.S. AIRFRAME DE-ICING (N46)
4 STALL IDENT SYSTEM (N55)
5 PITOT HEAD HEATERS (N25A)
6 COCKPIT LIGHTING (N12A)
7 SUPPLIES FOR INTEGRAL LIGHTS (N12B)
8 STATIC PLATE HEATERS (N25B)
9 A.C. POWER DISTRIBUTION (N06)
10 STALL VANE HEATING (N25C)
ART ID # HA00F890062AA
25-8NA5-1403B SH2
DWG ISS - 1

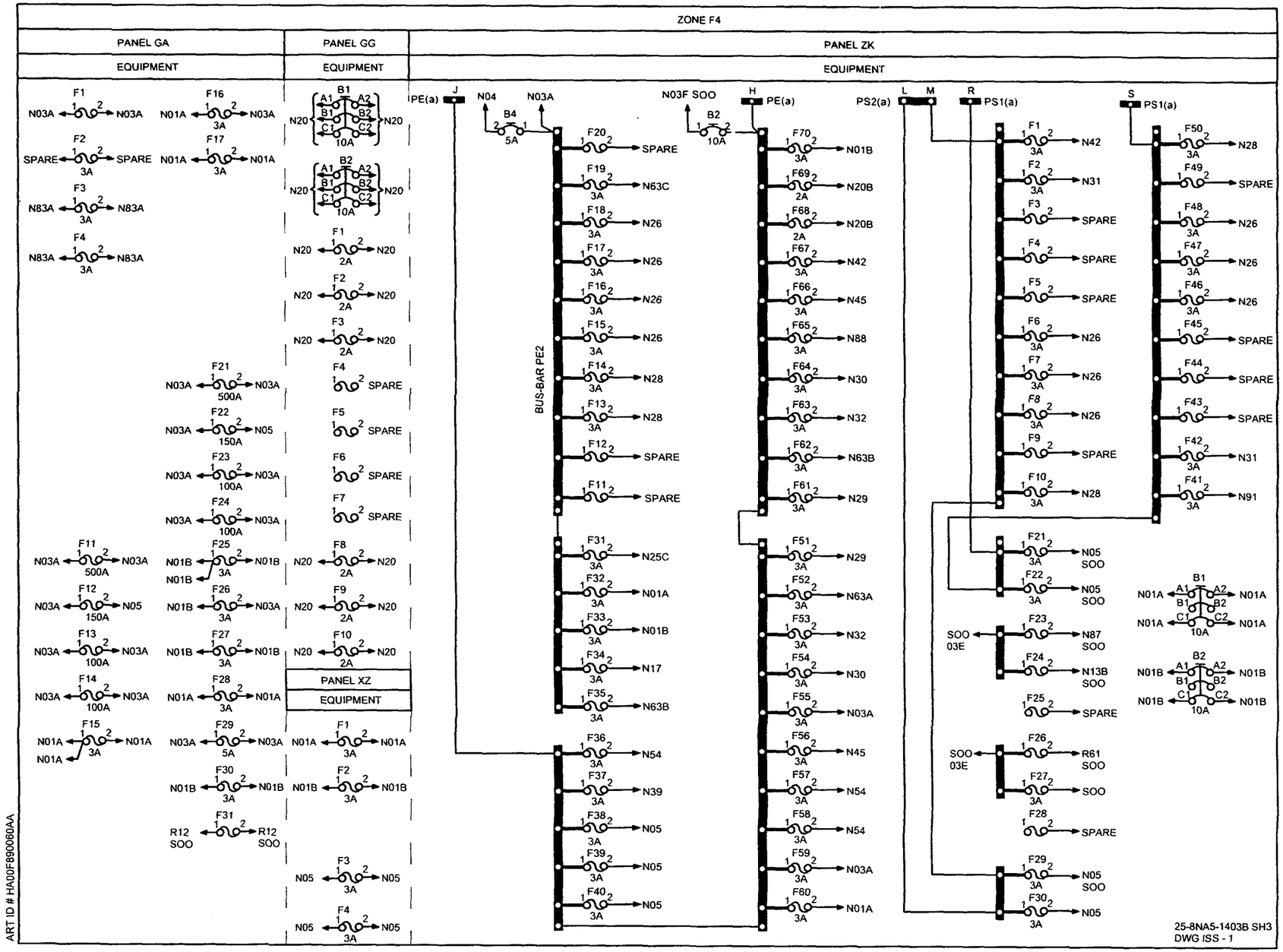
ZONE F4
PANEL GA
EQUIPMENT
PANEL GG
EQUIPMENT
PANEL ZK
EQUIPMENT
PANEL XZ
EQUIPMENT
BUS-BAR PE2
PE(a)
N04
N03A
N03F SOO
PE(a)
PS2(a)
PS1(a)
PS1(a)
25-8NA5-1403B SH3
DWG ISS - 1
ART ID # HA00F890060AA

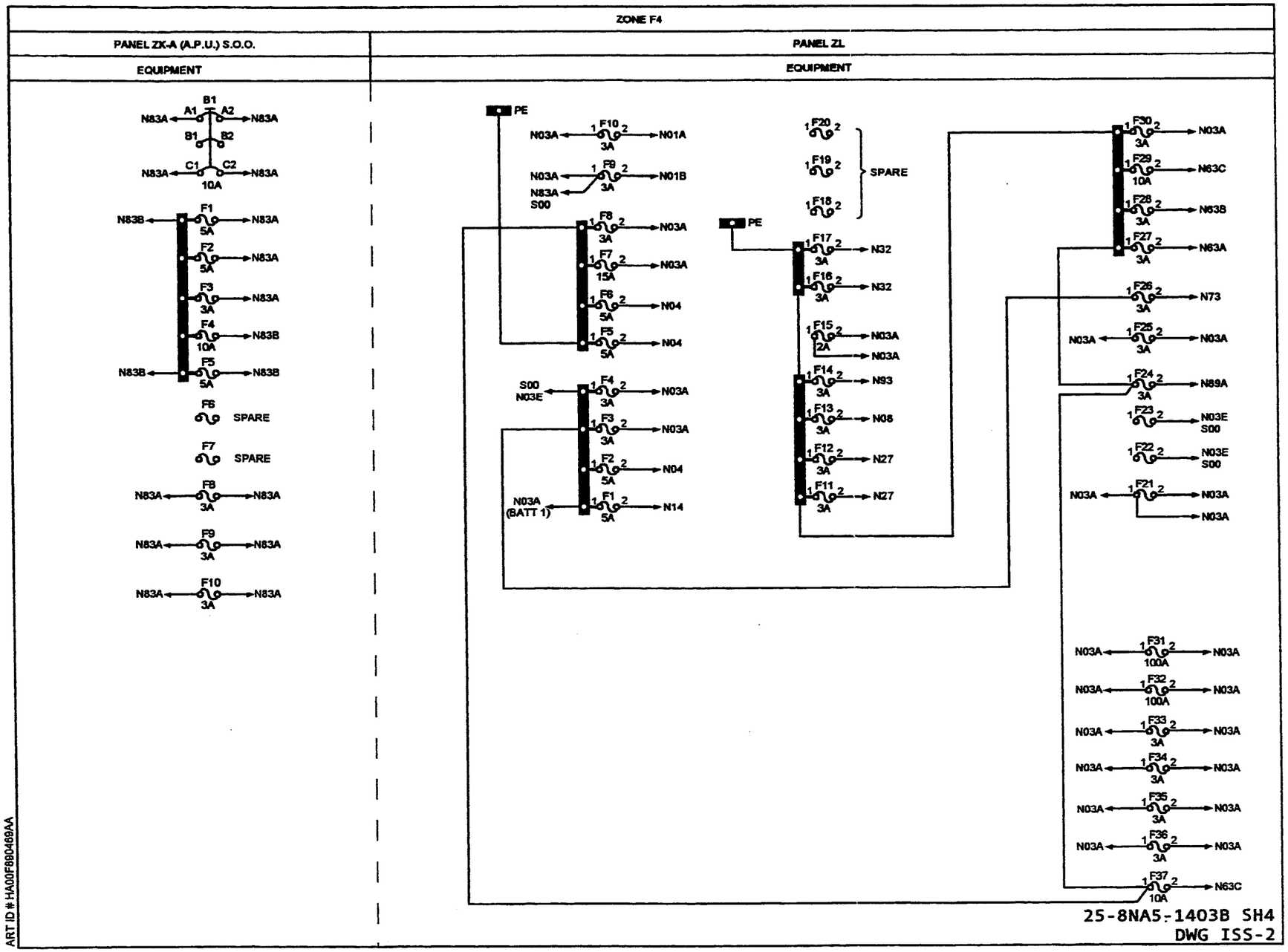
ZONE F4
PANEL ZK-A (A.P.U.) S.O.O.
EQUIPMENT
PANEL ZL
EQUIPMENT
B1
A1
A2
N83A
B1
B2
C1
C2
10A
F1
5A
F2
5A
F3
3A
F4
10A
F5
5A
N83B
F6
SPARE
F7
SPARE
F8
3A
F9
3A
F10
3A
PE
F10
3A
N01A
F9
3A
N01B
S00
F8
3A
N03A
F7
15A
F6
5A
N04
F5
5A
S00
N03E
F4
3A
F3
3A
F2
5A
N03A
(BATT 1)
F1
5A
N14
F20
F19
F18
SPARE
F17
3A
N32
F16
3A
F15
2A
F14
3A
N93
F13
3A
N08
F12
3A
N27
F11
3A
F30
3A
F29
10A
N63C
F28
3A
N63B
F27
3A
N63A
F26
3A
N73
F25
3A
F24
3A
N89A
F23
F22
F21
F31
100A
F32
100A
F33
3A
F34
3A
F35
3A
F36
3A
F37
10A
25-8NA5-1403B SH4
DWG ISS-2
ART ID # HA00F880469AA

IDENT	PART NUMBER	1234567 NOMENCLATURE	EFFECT FROM TO	UNITS PER ASSY
		DC POWER DISTRIBUTION	164165 167167 177179 181221 244245 253257 259276	
	25-8NA5-1403B	WIRING DIAGRAM- (MOD 253247A)		RF
A-D-XZ	S6GN55	.DIODE- (VK1152) (USED ON 25-8NF2371-31A)		1
B-D-XZ	S6GN55	.DIODE- (VK1152) (USED ON 25-8NF2371-31A)		1
B1-GG	583-96TCK14-10A	.CIRCUIT BREAKER-10A (VU0091)		1
B1-ZK	583-96TCK14-10A	.CIRCUIT BREAKER-10A (VU0091)		1
B1-ZKA	6TC14-10	.CIRCUIT BREAKER-10A (V82647)		1
B100-DAD	483TCG11J25-3A	.CIRCUIT BREAKER-3A (VU0091)		1
B101-DAD	483TCG11J25-3A	.CIRCUIT BREAKER-3A (VU0091)		1
B102-DAD	483TCG11J25-3A	.CIRCUIT BREAKER-3A (VU0091)		1
B103-DAD	483TCG11J25-3A	.CIRCUIT BREAKER-3A (VU0091)		1
B104-DAD	483TCG11J25-3A	.CIRCUIT BREAKER-3A (VU0091)		1
B105-DAD	SPARE	.SPARE-CIRCUIT BREAKER		1
B106-DAD	483TCG11J25-3A	.CIRCUIT BREAKER-3A (VU0091)		1
B107-DAD	483TCG11J25-3A	.CIRCUIT BREAKER-3A (VU0091)		1
B108-DAD	483TCG11J25-3A	.CIRCUIT BREAKER-3A (VU0091)		1
B109-DAD	483TCG11J25-3A	.CIRCUIT BREAKER-3A (VU0091)		1
B110-DAD	483TCG11J25-2A	.CIRCUIT BREAKER-2A (VU0091)		1
B111-DAD	483TCG11J25-3A	.CIRCUIT BREAKER-3A (VU0091)		1
B112-DAD	483TCG11J25-3A	.CIRCUIT BREAKER-3A (VU0091)		1
B113-DAD	483TCG11J25-3A	.CIRCUIT BREAKER-3A (VU0091)		1
B114-DAD	483TCG11J25-3A	.CIRCUIT BREAKER-3A (VU0091)		1
		MISSING ITEM NO. NOT APPLICABLE		

– ITEM NOT ILLUSTRATED

IDENT	PART NUMBER	1234567 NOMENCLATURE	EFFECT FROM TO	UNITS PER ASSY
B115-DAD	483TCG11J25-3A	.CIRCUIT BREAKER-3A (VU0091)		1
B116-DAD	483TCG11J25-3A	.CIRCUIT BREAKER-3A (VU0091)		1
B117-DAD	483TCG11J25-3A	.CIRCUIT BREAKER-3A (VU0091)		1
B118-DAD	483TCG11J25-3A	.CIRCUIT BREAKER-3A (VU0091)		1
B119-DAD	483TCG11J25-3A	.CIRCUIT BREAKER-3A (VU0091)		1
B120-DAD	25-8NF2217-20	.CIRCUIT BREAKER-20AMP (ALTERED FROM 483-96TCK14-20A (VU0091))		1
B121-DAD	483TCG11J25-3A	.CIRCUIT BREAKER-3A (VU0091)		1
B122-DAD	483TCG11J25-3A	.CIRCUIT BREAKER-3A (VU0091)		1
B123-DAD	483TCG11J25-3A	.CIRCUIT BREAKER-3A (VU0091)		1
B124-DAD	483TCG11J25-3A	.CIRCUIT BREAKER-3A (VU0091)		1
B125-DAD	483TCG11J25-3A	.CIRCUIT BREAKER-3A (VU0091)		1
B126-DAD	SPARE	.SPARE-CIRCUIT BREAKER		1
B127-DAD	25-8NF2217-15	.CIRCUIT BREAKER-15A (ALTERED FROM 483-96TCK14-15A (VU0091))		1
B128-DAD	483TCG11J25-5A	.CIRCUIT BREAKER-5A (VU0091)		1
B129-DAD	483TCG11J25-3A	.CIRCUIT BREAKER-3A (VU0091)		1
B13-DAD	483TCG11J25-3A	.CIRCUIT BREAKER-3A (VU0091)		1
B130-DAD	483TCG11J25-3A	.CIRCUIT BREAKER-3A (VU0091)		1
B131-DAD	483TCG11J25-5A	.CIRCUIT BREAKER-5A (VU0091)		1
B132-DAD	25-8NF2217-15	.CIRCUIT BREAKER-15A (ALTERED FROM 483-96TCK14-15A (VU0091))		1
B14-DAD	483TCG11J25-5A	.CIRCUIT BREAKER-5A (VU0091)		1
B15-DAD	483TCG11J25-5A	.CIRCUIT BREAKER-5A (VU0091)		1
B16-DAD	483TCG11J25-5A	.CIRCUIT BREAKER-5A (VU0091)		1
		MISSING ITEM NO. NOT APPLICABLE		

– ITEM NOT ILLUSTRATED

IDENT	PART NUMBER	1234567 NOMENCLATURE	EFFECT FROM TO	UNITS PER ASSY
B17-DAD	483TCG11J25-5A	.CIRCUIT BREAKER-5A (VU0091)		1
B18-DAD	483TCG11J25-3A	.CIRCUIT BREAKER-3A (VU0091)		1
B19-DAD	483TCG11J25-3A	.CIRCUIT BREAKER-3A (VU0091)		1
B2-DAD	483TCG11J25-5A	.CIRCUIT BREAKER-5A (VU0091)		1
B2-GG	583-96TCK14-10A	.CIRCUIT BREAKER-10A (VU0091)		1
B2-ZK	583-96TCK14-10A	.CIRCUIT BREAKER-10A (VU0091)		1
B20-DAD	483TCG11J25-3A	.CIRCUIT BREAKER-3A (VU0091)		1
B21-DAD	483TCG11J25-5A	.CIRCUIT BREAKER-5A (VU0091)		1
B22-DAD	483TCG11J25-3A	.CIRCUIT BREAKER-3A (VU0091)		1
B23-DAD	483TCG11J25-3A	.CIRCUIT BREAKER-3A (VU0091)		1
B24-DAD	483TCG11J25-1A	.CIRCUIT BREAKER-1A (VU0091)		1
B25-DAD	483TCG11J25-3A	.CIRCUIT BREAKER-3A (VU0091)		1
B26-DAD	25-8NF2217-25	.CIRCUIT BREAKER-25AMP (ALTERED FROM 483-96TCK14-25A (VU0091))		1
B27-DAD	25-8NF2217-25	.CIRCUIT BREAKER-25AMP (ALTERED FROM 483-96TCK14-25A (VU0091))		1
B28-DAD	483TCG11J25-3A	.CIRCUIT BREAKER-3AMP (VU0091)		1
B3-DAD	483TCG11J25-5A	.CIRCUIT BREAKER-5AMP (VU0091)		1
B30-DAD	483TCG11J25-5A	.CIRCUIT BREAKER-5AMP (VU0091)		1
B31-DAD	483TCG11J25-5A	.CIRCUIT BREAKER-5AMP (VU0091)		1
B32-DAD	SPARE	.SPARE-CIRCUIT BREAKER		1
B33-DAD	483TCG11J25-5A	.CIRCUIT BREAKER-5AMP (VU0091)		1
B34-DAD	483TCG11J25-1A	.CIRCUIT BREAKER-1AMP (VU0091)		1
B35-DAD	483TCG11J25-3A	.CIRCUIT BREAKER-3AMP (VU0091)		1
		MISSING ITEM NO. NOT APPLICABLE		

— ITEM NOT ILLUSTRATED

IDENT	PART NUMBER	1234567 NOMENCLATURE	EFFECT FROM TO	UNITS PER ASSY
B36-DAD	25-8NF2217-25	.CIRCUIT BREAKER-25AMP (ALTERED FROM 483-96TCK14-25A (VU0091))		1
B37-DAD	25-8NF2217-25	.CIRCUIT BREAKER-25AMP (ALTERED FROM 483-96TCK14-25A (VU0091))		1
B38-DAD	483TCG11J25-3A	.CIRCUIT BREAKER-3AMP (VU0091)		1
B4-ZK	483TCG11J5-5A	.CIRCUIT BREAKER-5AMP (VU0091)		1
B40-DAD	483TCG11J25-5A	.CIRCUIT BREAKER-5AMP (VU0091)		1
B41-DAD	483TCG11J25-3A	.CIRCUIT BREAKER-3AMP (VU0091)		1
B42-DAD	483TCG11J25-3A	.CIRCUIT BREAKER-3AMP (VU0091)		1
B43-DAD	483TCG11J25-3A	.CIRCUIT BREAKER-3AMP (VU0091)		1
B44-DAD	25-8NF2217-15	.CIRCUIT BREAKER-15AMP (ALTERED FROM 483-96TCK14-15A (VU0091))		1
B45-DAD	483TCG11J25-5A	.CIRCUIT BREAKER-5AMP (VU0091)		1
B46-DAD	483TCG11J25-2A	.CIRCUIT BREAKER-2AMP (VU0091)		1
B47-DAD	483TCG11J25-2A	.CIRCUIT BREAKER-2AMP (VU0091)		1
B48-DAD	483TCG11J25-3A	.CIRCUIT BREAKER-3AMP (VU0091)		1
B49-DAD	483TCG11J25-3A	.CIRCUIT BREAKER-3AMP (VU0091)		1
B5-DAD	483TCG11J25-5A	.CIRCUIT BREAKER-5AMP (VU0091)		1
B5-GA	3TC2-35	.CIRCUIT BREAKER-35AMP (VK0142)		1
B50-DAD	483TCG11J25-5A	.CIRCUIT BREAKER-5AMP (VU0091)		1
B51-DAD	483TCG11J25-3A	.CIRCUIT BREAKER-3AMP (VU0091)		1
B52-DAD	483TCG11J25-3A	.CIRCUIT BREAKER-3AMP (VU0091)		1
B53-DAD	483TCG11J25-3A	.CIRCUIT BREAKER-3AMP (VU0091)		1
B54-DAD	25-8NF2217-15	.CIRCUIT BREAKER-15AMP (ALTERED FROM 483-96TCK14-15A (VU0091))		1
		MISSING ITEM NO. NOT APPLICABLE		

– ITEM NOT ILLUSTRATED

IDENT	PART NUMBER	1234567 NOMENCLATURE	EFFECT FROM TO	UNITS PER ASSY
B55-DAD	483TCG11J25-5A	.CIRCUIT BREAKER-5AMP (VU0091)		1
B56-DAD	483TCG11J25-2A	.CIRCUIT BREAKER-2AMP (VU0091)		1
B57-DAD	483TCG11J25-2A	.CIRCUIT BREAKER-2AMP (VU0091)		1
B58-DAD	483TCG11J25-3A	.CIRCUIT BREAKER-3AMP (VU0091)		1
B59-DAD	483TCG11J25-3A	.CIRCUIT BREAKER-3AMP (VU0091)		1
B6-DAD	483TCG11J25-5A	.CIRCUIT BREAKER-5AMP (VU0091)		1
B6-GA	3TC2-35	.CIRCUIT BREAKER-35AMP (VK0142)		1
B60-DAD	483TCG11J25-3A	.CIRCUIT BREAKER-3AMP (VU0091)		1
B61-DAD	25-8NF2217-7	.CIRCUIT BREAKER-7.5AMP (ALTERED FROM 483-96TCK14-7-5A (VU0091))		1
B62-DAD	25-8NF2217-7	.CIRCUIT BREAKER-7.5AMP (ALTERED FROM 483-96TCK14-7-5A (VU0091))		1
B63-DAD	25-8NF2217-15	.CIRCUIT BREAKER-15A (ALTERED FROM 483-96TCK14-15A (VU0091))		1
B64-DAD	483TCG11J25-5A	.CIRCUIT BREAKER-5A (VU0091)		1
B65-DAD	SPARE	.SPARE-CIRCUIT BREAKER		1
B66-DAD	483TCG11J25-5A	.CIRCUIT BREAKER-5A (VU0091)		1
B67-DAD	483TCG11J25-3A	.CIRCUIT BREAKER-3A (VU0091)		1
B68-DAD	483TCG11J25-5A	.CIRCUIT BREAKER-5A (VU0091)		1
B69-DAD	483TCG11J25-3A	.CIRCUIT BREAKER-3A (VU0091)		1
B70-DAD	SPARE	.SPARE-CIRCUIT BREAKER		1
B71-DAD	483TCG11J25-5A	.CIRCUIT BREAKER-5A (VU0091)		1
B72-DAD	483TCG11J25-3A	.CIRCUIT BREAKER-3A (VU0091)		1
B73-DAD	25-8NF2217-15	.CIRCUIT BREAKER-15A (ALTERED FROM 483-96TCK14-15A (VU0091))		1
B74-DAD	483TCG11J25-5A	.CIRCUIT BREAKER-5A (VU0091)		1
		MISSING ITEM NO. NOT APPLICABLE		

– ITEM NOT ILLUSTRATED

IDENT	PART NUMBER	1234567 NOMENCLATURE	EFFECT FROM TO	UNITS PER ASSY
B75-DAD	SPARE	.SPARE-CIRCUIT BREAKER		1
B76-DAD	483TCG11J25-5A	.CIRCUIT BREAKER-5A (VU0091)		1
B77-DAD	483TCG11J25-5A	.CIRCUIT BREAKER-5A (VU0091)		1
B78-DAD	483TCG11J25-5A	.CIRCUIT BREAKER-5A (VU0091)		1
B79-DAD	SPARE	.SPARE-CIRCUIT BREAKER		1
B80-DAD	SPARE	.SPARE-CIRCUIT BREAKER		1
B81-DAD	483TCG11J25-3A	.CIRCUIT BREAKER-3A (VU0091)		1
B82-DAD	483TCG11J25-3A	.CIRCUIT BREAKER-3A (VU0091)		1
B83-DAD	483TCG11J25-3A	.CIRCUIT BREAKER-3A (VU0091)		1
B84-DAD	SPARE	.SPARE-CIRCUIT BREAKER		1
B85-DAD	483TCG11J25-3A	.CIRCUIT BREAKER-3A (VU0091)		1
B86-DAD	483TCG11J25-5A	.CIRCUIT BREAKER-5A (VU0091)		1
B87-DAD	483TCG11J25-5A	.CIRCUIT BREAKER-5A (VU0091)		1
B88-DAD	483TCG11J25-3A	.CIRCUIT BREAKER-3A (VU0091)		1
B89-DAD	483TCG11J25-3A	.CIRCUIT BREAKER-3A (VU0091)		1
B90-DAD	483TCG11J25-3A	.CIRCUIT BREAKER-3A (VU0091)		1
B91-DAD	483TCG11J25-3A	.CIRCUIT BREAKER-3A (VU0091)		1
B92-DAD	483TCG11J25-3A	.CIRCUIT BREAKER-3A (VU0091)		1
B93-DAD	483TCG11J25-3A	.CIRCUIT BREAKER-3A (VU0091)		1
B94-DAD	483TCG11J25-3A	.CIRCUIT BREAKER-3A (VU0091)		1
B95-DAD	SPARE	.SPARE-CIRCUIT BREAKER		1
B96-DAD	483TCG11J25-3A	.CIRCUIT BREAKER-3A (VU0091)		1
B97-DAD	483TCG11J25-3A	.CIRCUIT BREAKER-3A (VU0091)		1
B98-DAD	483TCG11J25-3A	.CIRCUIT BREAKER-3A (VU0091)		1
B99-DAD	483TCG11J25-3A	.CIRCUIT BREAKER-3A (VU0091)		1
D-XZ	25-8NF2371-31A	.HEATSINK ASSY- (COMPRISING DIODES: S6GN55 (VK1152))		1
		MISSING ITEM NO. NOT APPLICABLE		

– ITEM NOT ILLUSTRATED

IDENT	PART NUMBER	1234567 NOMENCLATURE	EFFECT FROM TO	UNITS PER ASSY
DJ	422255-7	.BUNG- (VK1793)		1
E-GA	LDG150Y4	.CONTACTOR- (VK4358)		1
F1-GA	5920-99-0120076	.FUSE-5A (VK0657)		1
F1-GG	5920-99-0120074	.FUSE-2A (VK0657)		1
F1-XZ	5920-99-0120075	.FUSE-3A (VK0657)		1
F1-ZK	5920-99-0120075	.FUSE-3A (VK0657)		1
F1-ZKA	5920-99-0120076	.FUSE-5A (VK0657)		1
F1-ZL	5920-99-0120076	.FUSE-5A (VK0657)		1
F10-DAC	5920-99-0120076	.FUSE-5A (VK0657)		1
F10-GG	5920-99-0120074	.FUSE-2A (VK0657)		1
F10-ZK	5920-99-0120075	.FUSE-3A (VK0657)		1
F10-ZKA	5920-99-0120075	.FUSE-3A (VK0657)		1
F10-ZL	5920-99-0120075	.FUSE-3A (VK0657)		1
F11-DAC	5920-99-0120075	.FUSE-3A (VK0657)		1
F11-GA	L1330A500	.FUSE-500A (VU0154)		1
F11-ZK	SPARE	.SPARE-FUSE		1
F11-ZL	5920-99-0120075	.FUSE-3A (VK0657)		1
F12-DAC	5920-99-0120075	.FUSE-3A (VK0657)		1
F12-GA	L1330A150	.FUSE-150A (VU0154)		1
F12-ZK	SPARE	.SPARE-FUSE		1
F12-ZL	5920-99-0120075	.FUSE-3A (VK0657)		1
F13-GA	UAM100	.FUSE-100A (VK0672)		1
F13-ZK	5920-99-0120075	.FUSE-3A (VK0657)		1
F13-ZL	5920-99-0120075	.FUSE-3A (VK0657)		1
F14-DAC	5920-99-0120076	.FUSE-5A (VK0657)		1
F14-GA	UAM100	.FUSE-100A (VK0672)		1
		MISSING ITEM NO. NOT APPLICABLE		

– ITEM NOT ILLUSTRATED

IDENT	PART NUMBER	1 2 3 4 5 6 7 NOMENCLATURE	EFFECT FROM TO	UNITS PER ASSY
F14-ZK	5920-99-0120075	.FUSE-3A (VK0657)		1
F14-ZL	5920-99-0120075	.FUSE-3A (VK0657)		1
F15-DAC	5920-99-0120075	.FUSE-3A (VK0657)		1
F15-GA	5920-99-0120075	.FUSE-3A (VK0657)		1
F15-ZK	5920-99-0120075	.FUSE-3A (VK0657)		1
F15-ZL	5920-99-0120074	.FUSE-2A (VK0657)		1
F16-DAC	5920-99-0120074	.FUSE-2A (VK0657)		1
F16-GA	5920-99-0120075	.FUSE-3A (VK0657)		1
F16-ZK	5920-99-0120075	.FUSE-3A (VK0657)		1
F16-ZL	5920-99-0120075	.FUSE-3A (VK0657)		1
F17-DAC	5920-99-0120076	.FUSE-5A (VK0657)		1
F17-GA	5920-99-0120075	.FUSE-3A (VK0657)		1
F17-ZK	5920-99-0120075	.FUSE-3A (VK0657)		1
F17-ZL	5920-99-0120075	.FUSE-3A (VK0657)		1
F18-DAC	5920-99-0120076	.FUSE-5A (VK0657)		1
F18-ZK	5920-99-0120075	.FUSE-3A (VK0657)		1
F18-ZL	SPARE	.SPARE-FUSE		1
F19-DAC	5920-99-0120075	.FUSE-3A (VK0657)		1
F19-ZK	5920-99-0120075	.FUSE-3A (VK0657)		1
F19-ZL	SPARE	.SPARE-FUSE		1
F2-DAC	5920-99-0120075	.FUSE-3A (VK0657)		1
F2-GA	SPARE	.SPARE-FUSE 3A		1
F2-GG	5920-99-0120074	.FUSE-2A (VK0657)		1
F2-XZ	5920-99-0120075	.FUSE-3A (VK0657)		1
F2-ZK	5920-99-0120075	.FUSE-3A (VK0657)		1
F2-ZKA	5920-99-0120076	.FUSE-5A (VK0657)		1
		MISSING ITEM NO. NOT APPLICABLE		

– ITEM NOT ILLUSTRATED

IDENT	PART NUMBER	1234567 NOMENCLATURE	EFFECT FROM TO	UNITS PER ASSY
F2-ZL	5920-99-0120076	.FUSE-5A (VK0657)		1
F20-DAC	5920-99-0120076	.FUSE-5A (VK0657)		1
F20-ZK	SPARE	.SPARE-FUSE		1
F20-ZL	SPARE	.SPARE-FUSE		1
F21-GA	L1330A500	.FUSE-500A (VU0154)		1
F21-ZK	5920-99-0120075	.FUSE-3A (VK0657)		1
F21-ZL	SPARE	.SPARE-FUSE		1
F22-GA	L1330A150	.FUSE-150A (VU0154)		1
F22-ZK	5920-99-0120075	.FUSE-3A (VK0657)		1
F22-ZL	SPARE	.SPARE-FUSE		1
F23-GA	UAM100	.FUSE-100A (VK0672)		1
F23-ZK	SPARE	.SPARE-FUSE		1
F23-ZL	SPARE	.SPARE-FUSE		1
F24-GA	UAM100	.FUSE-100A (VK0672)		1
F24-ZK	SPARE	.SPARE-FUSE		1
F24-ZL	5920-99-0120075	.FUSE-3A (VK0657)		1
F25-GA	5920-99-0120075	.FUSE-3A (VK0657)		1
F25-ZK	SPARE	.SPARE-FUSE		1
F25-ZL	5920-99-0120075	.FUSE-3A (VK0657)		1
F26-GA	5920-99-0120075	.FUSE-3A (VK0657)		1
F26-ZK	SPARE	.SPARE-FUSE		1
F26-ZL	5920-99-0120075	.FUSE-3A (VK0657)		1
F27-GA	5920-99-0120075	.FUSE-3A (VK0657)		1
F27-ZK	SPARE	.SPARE-FUSE 3A		1
F27-ZL	5920-99-0120075	.FUSE-3A (VK0657)		1
F28-GA	5920-99-0120075	.FUSE-3A (VK0657)		1
F28-ZK	SPARE	.SPARE-FUSE		1
F28-ZL	5920-99-0120075	.FUSE-3A (VK0657)		1
F29-GA	5920-99-0120076	.FUSE-5A (VK0657)		1
F29-ZK	5920-99-0120075	.FUSE-3A (VK0657)		1
		MISSING ITEM NO. NOT APPLICABLE		

— ITEM NOT ILLUSTRATED

IDENT	PART NUMBER	1234567 NOMENCLATURE	EFFECT FROM TO	UNITS PER ASSY
F29-ZL	5920-99-0120078	.FUSE-10A (VK0657)		1
F3-DAC	5920-99-0120075	.FUSE-3A (VK0657)		1
F3-GA	5920-99-0120075	.FUSE-3A (VK0657)		1
F3-GG	5920-99-0120074	.FUSE-2A (VK0657)		1
F3-XZ	5920-99-0120075	.FUSE-3A (VK0657)		1
F3-ZK	SPARE	.SPARE-FUSE		1
F3-ZKA	5920-99-0120075	.FUSE-3A (VK0657)		1
F3-ZL	5920-99-0120075	.FUSE-3A (VK0657)		1
F30-GA	5920-99-0120075	.FUSE-3A (VK0657)		1
F30-ZK	5920-99-0120075	.FUSE-3A (VK0657)		1
F30-ZL	5920-99-0120075	.FUSE-3A (VK0657)		1
F31-GA	SPARE	.SPARE-FUSE		1
F31-ZK	5920-99-0120075	.FUSE-3A (VK0657)		1
F31-ZL	UAM100	.FUSE-100A (VK0672)		1
F32-ZK	5920-99-0120075	.FUSE-3A (VK0657)		1
F32-ZL	UAM100	.FUSE-100A (VK0672)		1
F33-ZK	5920-99-0120075	.FUSE-3A (VK0657)		1
F33-ZL	5920-99-0120075	.FUSE-3A (VK0657)		1
F34-ZK	5920-99-0120075	.FUSE-3A (VK0657)		1
F34-ZL	5920-99-0120075	.FUSE-3A (VK0657)		1
F35-ZK	5920-99-0120075	.FUSE-3A (VK0657)		1
F35-ZL	5920-99-0120075	.FUSE-3A (VK0657)		1
F36-ZK	5920-99-0120075	.FUSE-3A (VK0657)		1
F36-ZL	5920-99-0120075	.FUSE-3A (VK0657)		1
F37-ZK	5920-99-0120075	.FUSE-3A (VK0657)		1
F37-ZL	5920-99-0120078	.FUSE-10A (VK0657)		1
		MISSING ITEM NO. NOT APPLICABLE		

– ITEM NOT ILLUSTRATED

IDENT	PART NUMBER	1234567 NOMENCLATURE	EFFECT FROM TO	UNITS PER ASSY
F38-ZK	5920-99-0120075	.FUSE-3A (VK0657)		1
F39-ZK	5920-99-0120075	.FUSE-3A (VK0657)		1
F4-DAC	5920-99-0120075	.FUSE-3A (VK0657)		1
F4-GA	5920-99-0120075	.FUSE-3A (VK0657)		1
F4-GG	SPARE	.SPARE-FUSE		1
F4-XZ	5920-99-0120075	.FUSE-3A (VK0657)		1
F4-ZK	SPARE	.SPARE-FUSE		1
F4-ZKA	5920-99-0120078	.FUSE-10A (VK0657)		1
F4-ZL	5920-99-0120075	.FUSE-3A (VK0657)		1
F40-ZK	5920-99-0120075	.FUSE-3A (VK0657)		1
F41-ZK	5920-99-0120075	.FUSE-3A (VK0657)		1
F42-ZK	5920-99-0120075	.FUSE-3A (VK0657)		1
F43-ZK	SPARE	.SPARE-FUSE		1
F44-ZK	SPARE	.SPARE-FUSE		1
F45-ZK	SPARE	.SPARE-FUSE		1
F46-ZK	5920-99-0120075	.FUSE-3A (VK0657)		1
F47-ZK	5920-99-0120075	.FUSE-3A (VK0657)		1
F48-ZK	5920-99-0120075	.FUSE-3A (VK0657)		1
F49-ZK	SPARE	.SPARE-FUSE		1
F5-DAC	5920-99-0120075	.FUSE-3A (VK0657)		1
F5-GG	SPARE	.SPARE-FUSE		1
F5-ZK	SPARE	.SPARE-FUSE		1
F5-ZKA	5920-99-0120076	.FUSE-5A (VK0657)		1
F5-ZL	5920-99-0120076	.FUSE-5A (VK0657)		1
F50-ZK	5920-99-0120075	.FUSE-3A (VK0657)		1
F51-ZK	5920-99-0120075	.FUSE-3A (VK0657)		1
F52-ZK	5920-99-0120075	.FUSE-3A (VK0657)		1
F53-ZK	5920-99-0120075	.FUSE-3A (VK0657)		1
F54-ZK	5920-99-0120075	.FUSE-3A (VK0657)		1
		MISSING ITEM NO. NOT APPLICABLE		

– ITEM NOT ILLUSTRATED

IDENT	PART NUMBER	1234567 NOMENCLATURE	EFFECT FROM TO	UNITS PER ASSY
F55-ZK	5920-99-0120075	.FUSE-3A (VK0657)		1
F56-ZK	5920-99-0120075	.FUSE-3A (VK0657)		1
F57-ZK	5920-99-0120075	.FUSE-3A (VK0657)		1
F58-ZK	5920-99-0120075	.FUSE-3A (VK0657)		1
F59-ZK	5920-99-0120075	.FUSE-3A (VK0657)		1
F6-DAC	5920-99-0120075	.FUSE-3A (VK0657)		1
F6-GG	SPARE	.SPARE-FUSE		1
F6-ZK	5920-99-0120075	.FUSE-3A (VK0657)		1
F6-ZKA	SPARE	.SPARE-FUSE		1
F6-ZL	5920-99-0120076	.FUSE-5A (VK0657)		1
F60-ZK	5920-99-0120075	.FUSE-3A (VK0657)		1
F61-ZK	5920-99-0120075	.FUSE-3A (VK0657)		1
F62-ZK	5920-99-0120075	.FUSE-3A (VK0657)		1
F63-ZK	5920-99-0120075	.FUSE-3A (VK0657)		1
F64-ZK	5920-99-0120075	.FUSE-3A (VK0657)		1
F65-ZK	5920-99-0120075	.FUSE-3A (VK0657)		1
F66-ZK	5920-99-0120075	.FUSE-3A (VK0657)		1
F67-ZK	5920-99-0120075	.FUSE-3A (VK0657)		1
F68-ZK	5920-99-0120074	.FUSE-2A (VK0657)		1
F69-ZK	5920-99-0120074	.FUSE-2A (VK0657)		1
F7-DAC	5920-99-0120075	.FUSE-3A (VK0657)		1
F7-GG	SPARE	.SPARE-FUSE		1
F7-ZK	5920-99-0120075	.FUSE-3A (VK0657)		1
F7-ZKA	SPARE	.SPARE-FUSE		1
F7-ZL	5920-99-0120079	.FUSE-15A (VK0657)		1
F70-ZK	5920-99-0120075	.FUSE-3A (VK0657)		1
F8-DAC	5920-99-0120075	.FUSE-3A (VK0657)		1
		MISSING ITEM NO. NOT APPLICABLE		

- ITEM NOT ILLUSTRATED

IDENT	PART NUMBER	1234567 NOMENCLATURE	EFFECT FROM TO	UNITS PER ASSY
F8-GG	5920-99-0120074	.FUSE-2A (VK0657)		1
F8-ZK	5920-99-0120075	.FUSE-3A (VK0657)		1
F8-ZKA	5920-99-0120075	.FUSE-3A (VK0657)		1
F8-ZL	5920-99-0120075	.FUSE-3A (VK0657)		1
F9-DAC	5920-99-0120076	.FUSE-5A (VK0657)		1
F9-GG	5920-99-0120074	.FUSE-2A (VK0657)		1
F9-ZK	SPARE	.SPARE-FUSE		1
F9-ZKA	5920-99-0120075	.FUSE-3A (VK0657)		1
F9-ZL	5920-99-0120075	.FUSE-3A (VK0657)		1
HN-DA	HWBUN1146S3B	.TERMINAL BLOCK- (VK0574)		1
HP-DA	HWBUN1146S3B	.TERMINAL BLOCK- (VK0574)		1
		MISSING ITEM NO. NOT APPLICABLE		

– ITEM NOT ILLUSTRATED

ZONE F2

PANEL DA

SUB PANEL D

ART ID # HA00F89098BAA

1 D.C. POWER DISTRIBUTION (N03A)

25-8NA5-6603E SH 1
DWG ISS - 2

IDENT	PART NUMBER	1234567 NOMENCLATURE	EFFECT FROM TO	UNITS PER ASSY
		DC POWER DISTRIBUTION	212212 240240 243243	
	25-8NA5-6603E	.WIRING DIAGRAM- (MOD 25A684B)		RF
B144-DAD	25-8NF2217-15	.CIRCUIT BREAKER-15A (ALTERED FROM 483-96TCK14-15A (VU0091))		1
B151-DAD	25-8NF2217-15	.CIRCUIT BREAKER-15A (ALTERED FROM 483-96TCK14-15A (VU0091))		1
B152-DAD	25-8NF2217-15	.CIRCUIT BREAKER-15A (ALTERED FROM 483-96TCK14-15A (VU0091))		1

MISSING ITEM NO. NOT APPLICABLE

– ITEM NOT ILLUSTRATED

AC POWER DISTRIBUTION

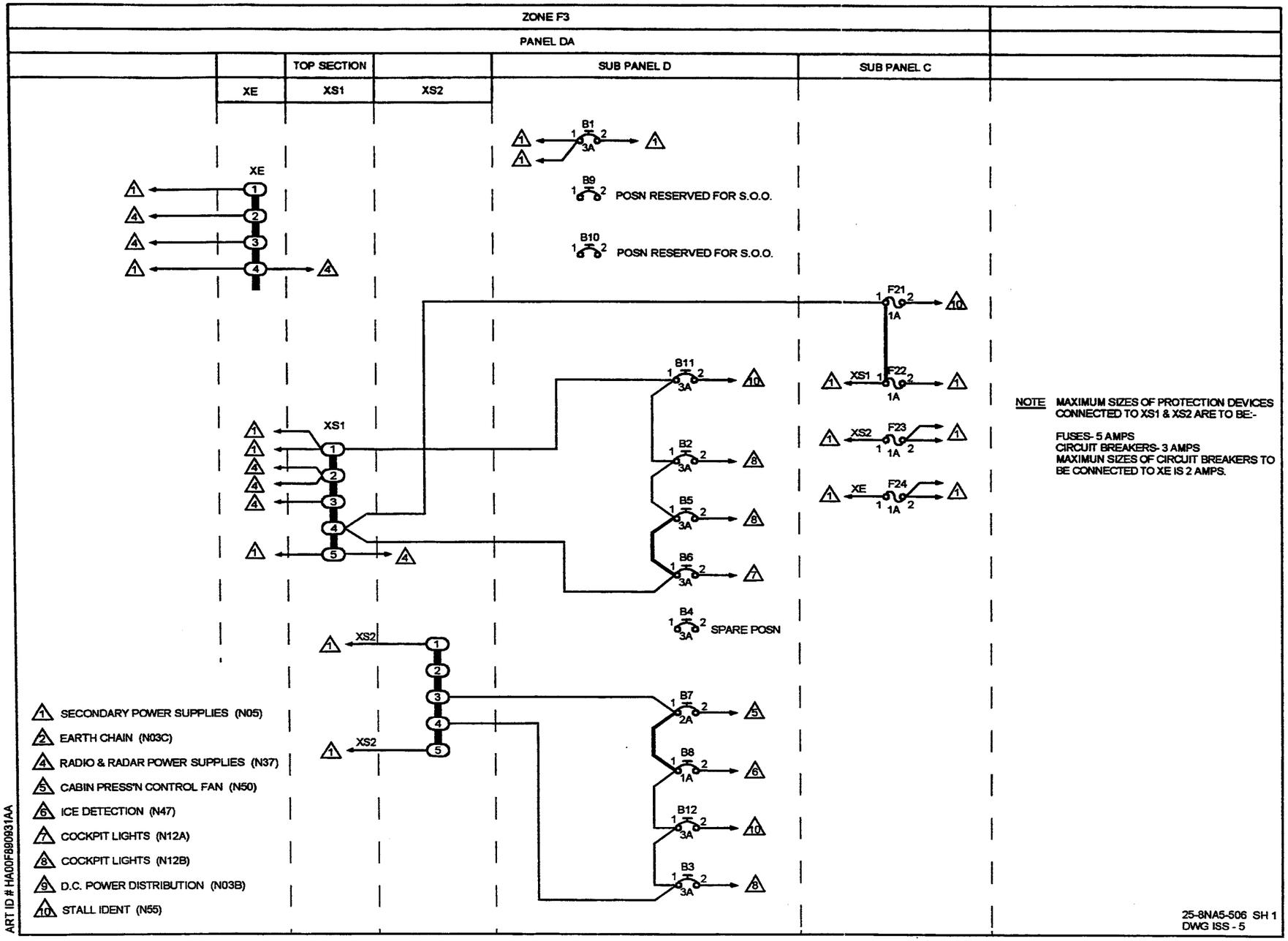
ZONE F3
PANEL DA
TOP SECTION
SUB PANEL D
SUB PANEL C
XE
XS1
XS2
B1
3A
B9
POSN RESERVED FOR S.O.O.
B10
POSN RESERVED FOR S.O.O.
F21
1A
B11
3A
F22
1A
XS1
XS2
F23
1A
B2
3A
XE
F24
1A
B5
3A
B6
3A
B4
3A
SPARE POSN
B7
2A
B8
1A
B12
3A
B3
3A
NOTE MAXIMUM SIZES OF PROTECTION DEVICES CONNECTED TO XS1 & XS2 ARE TO BE:-
FUSES- 5 AMPS
CIRCUIT BREAKERS- 3 AMPS
MAXIMUN SIZES OF CIRCUIT BREAKERS TO BE CONNECTED TO XE IS 2 AMPS.
1 SECONDARY POWER SUPPLIES (N05)
2 EARTH CHAIN (N03C)
4 RADIO & RADAR POWER SUPPLIES (N37)
5 CABIN PRESS'N CONTROL FAN (N50)
6 ICE DETECTION (N47)
7 COCKPIT LIGHTS (N12A)
8 COCKPIT LIGHTS (N12B)
9 D.C. POWER DISTRIBUTION (N03B)
10 STALL IDENT (N55)
ART ID # HA00F980931AA
25-8NA5-506 SH 1
DWG ISS - 5

IDENT	PART NUMBER	1234567 NOMENCLATURE	EFFECT FROM TO	UNITS PER ASSY
		AC POWER DISTRIBUTION	091163 166166 168176 223223 225225 229232 234234 236236 238243 246252	
	25-8NA5-506	WIRING DIAGRAM- (MOD 253149C)		RF
B1-DAD	483TCG11J25-3A	.CIRCUIT BREAKER-3A (VU0091)		1
B11-DAD	483TCG11J25-3A	.CIRCUIT BREAKER-3A (VU0091)		1
B12-DAD	483TCG11J25-3A	.CIRCUIT BREAKER-3A (VU0091)		1
B2-DAD	483TCG11J25-3A	.CIRCUIT BREAKER-3A (VU0091)		1
B3-DAD	483TCG11J25-3A	.CIRCUIT BREAKER-3A (VU0091)		1
B5-DAD	483TCG11J25-3A	.CIRCUIT BREAKER-3A (VU0091)		1
B6-DAD	483TCG11J25-3A	.CIRCUIT BREAKER-3A (VU0091)		1
B7-DAD	483TCG11J25-2A	.CIRCUIT BREAKER-2A (VU0091)		1
B8-DAD	483TCG11J25-1A	.CIRCUIT BREAKER-1A (VU0091)		1
F21-DAC	5920-99-0120073	.FUSE-1A (VK0657)		1
F22-DAC	5920-99-0120073	.FUSE-1A (VK0657)		1
F23-DAC	5920-99-0120073	.FUSE-1A (VK0657)		1
F24-DAC	5920-99-0120073	.FUSE-1A (VK0657)		1
XE	HWBUN1736S5B	.TERMINAL BLOCK- (VK0574)		1
XS1	HWBUN1736S5B	.TERMINAL BLOCK- (VK0574)		1
XS2	HWBUN1736S5B	.TERMINAL BLOCK- (VK0574)		1
		MISSING ITEM NO. NOT APPLICABLE		

– ITEM NOT ILLUSTRATED

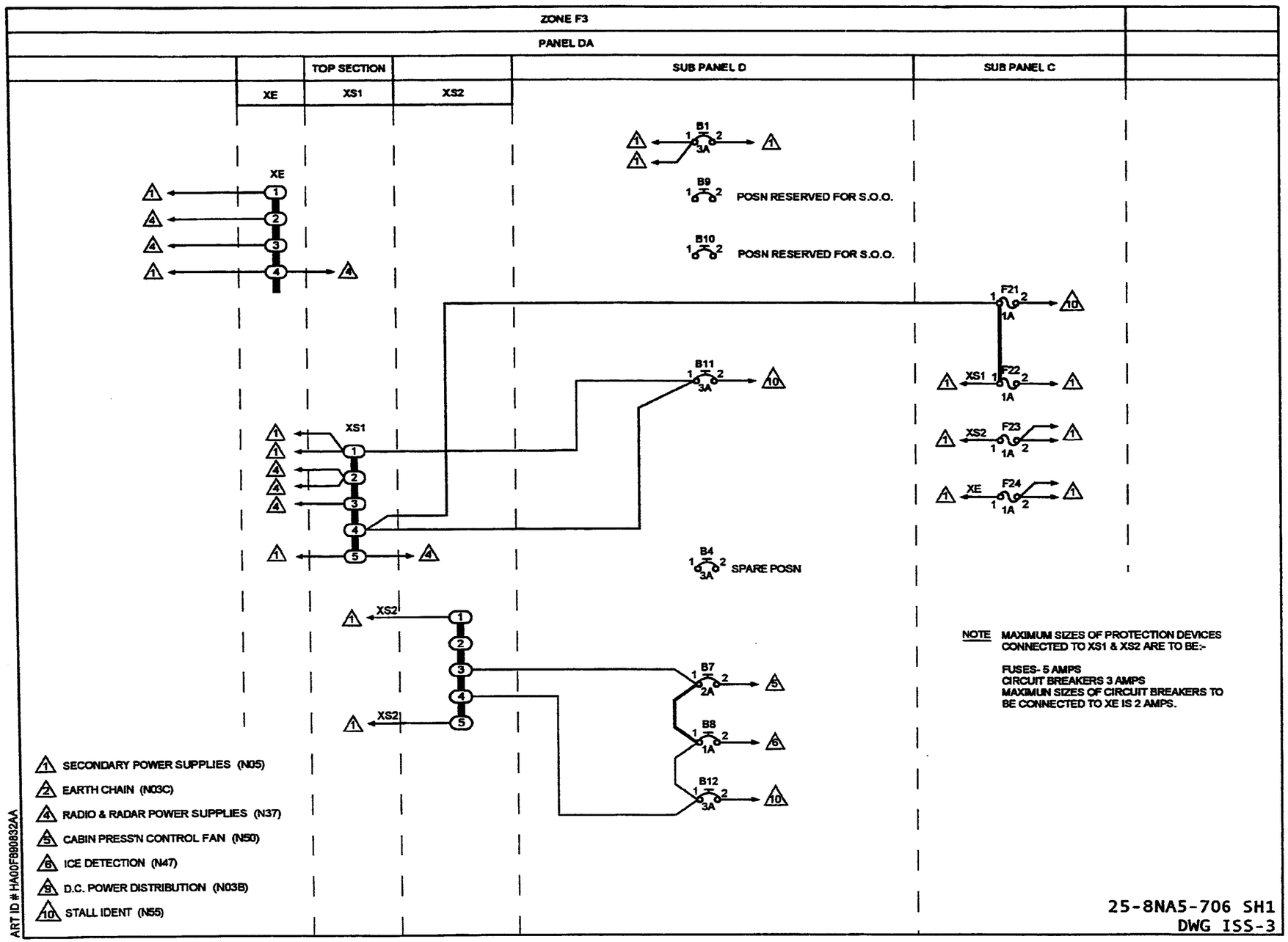
ZONE F3
PANEL DA
TOP SECTION
SUB PANEL D
SUB PANEL C
XE
XS1
XS2
B1
3A
B9
POSN RESERVED FOR S.O.O.
B10
POSN RESERVED FOR S.O.O.
F21
1A
F22
1A
F23
1A
F24
1A
B11
3A
B4
3A
SPARE POSN
B7
2A
B8
1A
B12
3A
NOTE MAXIMUM SIZES OF PROTECTION DEVICES CONNECTED TO XS1 & XS2 ARE TO BE:-
FUSES- 5 AMPS
CIRCUIT BREAKERS 3 AMPS
MAXIMUN SIZES OF CIRCUIT BREAKERS TO BE CONNECTED TO XE IS 2 AMPS.
1 SECONDARY POWER SUPPLIES (N05)
2 EARTH CHAIN (N03C)
4 RADIO & RADAR POWER SUPPLIES (N37)
5 CABIN PRESS'N CONTROL FAN (N50)
6 ICE DETECTION (N47)
9 D.C. POWER DISTRIBUTION (N03B)
10 STALL IDENT (N55)
ART ID # HA00F990832AA
25-8NA5-706 SH1
DWG ISS-3

IDENT	PART NUMBER	1234567 NOMENCLATURE	EFFECT FROM TO	UNITS PER ASSY
		AC POWER DISTRIBUTION	164165 167167 177222 224224 226228 233233 235235 237237 244245 253276	
	25-8NA5-706	WIRING DIAGRAM- (MOD 253247A) (MOD 25F505A)		RF
B1-DAD	483TCG11J25-3A	.CIRCUIT BREAKER-3AMP (VU0091)		1
B11-DAD	483TCG11J25-3A	.CIRCUIT BREAKER-3AMP (VU0091)		1
B12-DAD	483TCG11J25-3A	.CIRCUIT BREAKER-3AMP (VU0091)		1
B7-DAD	483TCG11J25-2A	.CIRCUIT BREAKER-2AMP (VU0091)		1
B8-DAD	483TCG11J25-1A	.CIRCUIT BREAKER-1AMP (VU0091)		1
F21-DAC	5920-99-0120073	.FUSE-1AMP (VK0657)		1
F22-DAC	5920-99-0120073	.FUSE-1AMP (VK0657)		1
F23-DAC	5920-99-0120073	.FUSE-1AMP (VK0657)		1
F24-DAC	5920-99-0120073	.FUSE-1A (VK0657)		1
XE	HWBUN1736S5B	.TERMINAL BLOCK- (VK0574)		1
XS1	HWBUN1736S5B	.TERMINAL BLOCK- (VK0574)		1
XS2	HWBUN1736S5B	.TERMINAL BLOCK- (VK0574)		1
		MISSING ITEM NO. NOT APPLICABLE		

– ITEM NOT ILLUSTRATED

EARTH/GROUND STATIONS

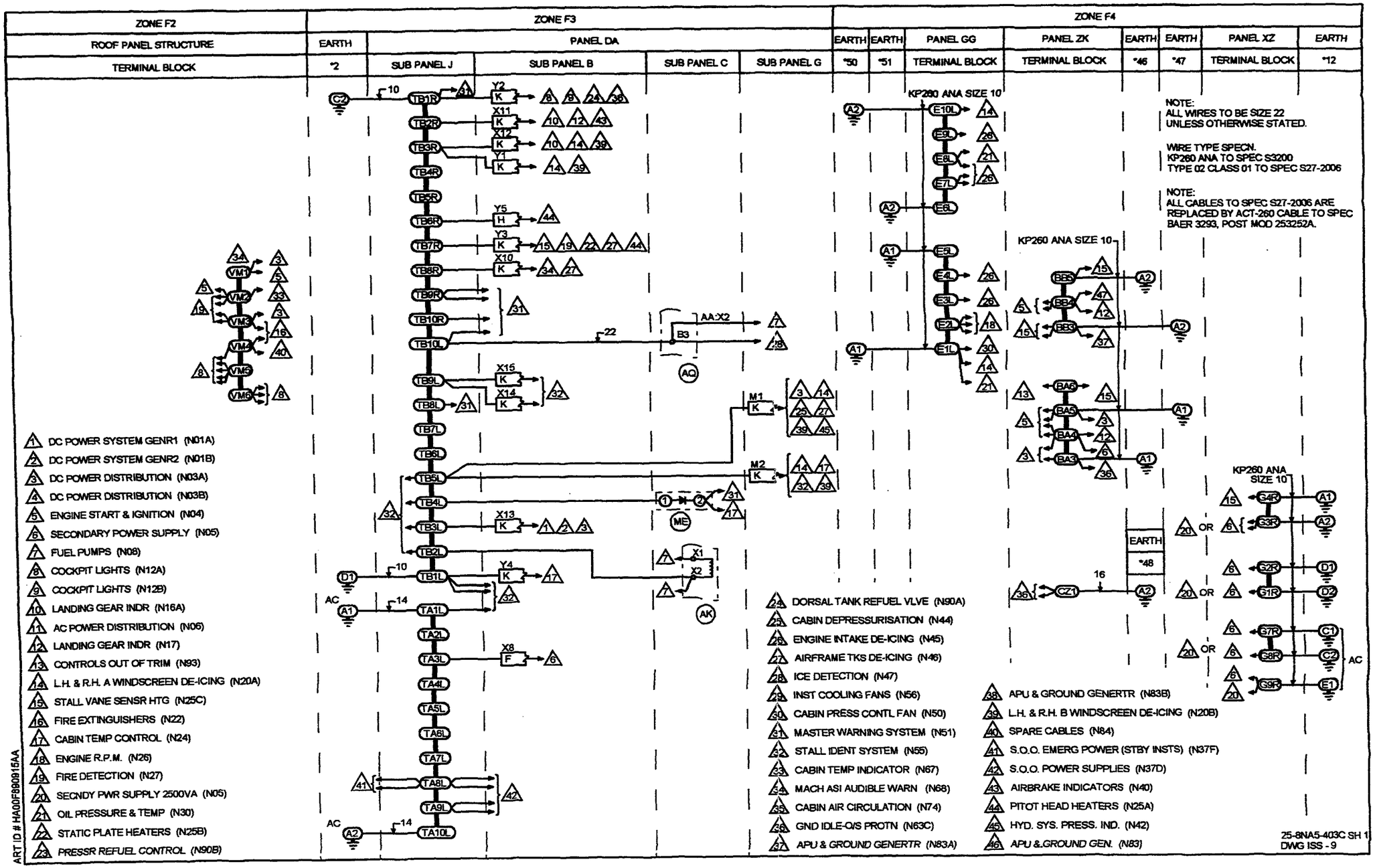
ZONE F2
ZONE F3
ZONE F4
ROOF PANEL STRUCTURE
EARTH
PANEL DA
EARTH
EARTH
PANEL GG
PANEL ZK
EARTH
EARTH
PANEL XZ
EARTH
TERMINAL BLOCK
*2
SUB PANEL J
SUB PANEL B
SUB PANEL C
SUB PANEL G
*50
*51
TERMINAL BLOCK
TERMINAL BLOCK
*46
*47
TERMINAL BLOCK
*12
KP260 ANA SIZE 10
NOTE:
ALL WIRES TO BE SIZE 22
UNLESS OTHERWISE STATED.
WIRE TYPE SPECN.
KP260 ANA TO SPEC S3200
TYPE 02 CLASS 01 TO SPEC S27-2006
NOTE:
ALL CABLES TO SPEC S27-2006 ARE
REPLACED BY ACT-260 CABLE TO SPEC
BAER 3293, POST MOD 253252A.
KP260 ANA SIZE 10
KP260 ANA
SIZE 10
EARTH
*48
OR
AC
1 DC POWER SYSTEM GENR1 (N01A)
2 DC POWER SYSTEM GENR2 (N01B)
3 DC POWER DISTRIBUTION (N03A)
4 DC POWER DISTRIBUTION (N03B)
5 ENGINE START & IGNITION (N04)
6 SECONDARY POWER SUPPLY (N05)
7 FUEL PUMPS (N08)
8 COCKPIT LIGHTS (N12A)
9 COCKPIT LIGHTS (N12B)
10 LANDING GEAR INDR (N16A)
11 AC POWER DISTRIBUTION (N06)
12 LANDING GEAR INDR (N17)
13 CONTROLS OUT OF TRIM (N93)
14 L.H. & R.H. A WINDSCREEN DE-ICING (N20A)
15 STALL VANE SENSR HTG (N25C)
16 FIRE EXTINGUISHERS (N22)
17 CABIN TEMP CONTROL (N24)
18 ENGINE R.P.M. (N26)
19 FIRE DETECTION (N27)
20 SECNDY PWR SUPPLY 2500VA (N05)
21 OIL PRESSURE & TEMP (N30)
22 STATIC PLATE HEATERS (N25B)
23 PRESSR REFUEL CONTROL (N90B)
24 DORSAL TANK REFUEL VLVE (N90A)
25 CABIN DEPRESSURISATION (N44)
26 ENGINE INTAKE DE-ICING (N45)
27 AIRFRAME TKS DE-ICING (N46)
28 ICE DETECTION (N47)
29 INST COOLING FANS (N56)
30 CABIN PRESS CONTL FAN (N50)
31 MASTER WARNING SYSTEM (N51)
32 STALL IDENT SYSTEM (N55)
33 CABIN TEMP INDICATOR (N67)
34 MACH ASI AUDIBLE WARN (N68)
35 CABIN AIR CIRCULATION (N74)
36 GND IDLE-O/S PROTN (N63C)
37 APU & GROUND GENERTR (N83A)
38 APU & GROUND GENERTR (N83B)
39 L.H. & R.H. B WINDSCREEN DE-ICING (N20B)
40 SPARE CABLES (N84)
41 S.O.O. EMERG POWER (STBY INSTS) (N37F)
42 S.O.O. POWER SUPPLIES (N37D)
43 AIRBRAKE INDICATORS (N40)
44 PITOT HEAD HEATERS (N25A)
45 HYD. SYS. PRESS. IND. (N42)
46 APU &.GROUND GEN. (N83)
ART ID # HA00F890815AA
25-8NA5-403C SH 1
DWG ISS - 9

IDENT	PART NUMBER	1234567 NOMENCLATURE	EFFECT FROM TO	UNITS PER ASSY
		EARTH CHAIN	091151	
	25-8NA5-403C	WIRING DIAGRAM- (MOD 253149C)		RF
AK-DAC	9330-4026	.RELAY- (VK6265)		1
AQ-DAC	25-8NF4661-1A	.TIME DELAY UNIT		1
BA-ZK	HWBUN1146S10B	.TERMINAL BLOCK- (VK0574)		1
BB-ZK	HWBUN1146S10B	.TERMINAL BLOCK- (VK0574)		1
E-GG	HWBUN1146D10B	.TERMINAL BLOCK- (VK0574)		1
G-XZ	HWBUN1146D10B	.TERMINAL BLOCK- (VK0574)		1
ME-DAC	BYW54	.DIODE- (VK0004)		1
M1-DAG	MRTB20E04-111	.TERMINAL JUNCTION MODULE- (V14283)		1
M2-DAG	MRTB20E04-111	.TERMINAL JUNCTION MODULE- (V14283)		1
TA-DAJ	HWB1736D10B	.TERMINAL BLOCK- (VK0574)		1
TB-DAJ	HWB1736D10B	.TERMINAL BLOCK- (VK0574)		1
VM	HWBUN1146S10B	.TERMINAL BLOCK- (VK0574)		1
X10-DAB	MRTB20E04-111	.TERMINAL JUNCTION MODULE- (V14283)		1
X11-DAB	MRTB20E04-111	.TERMINAL JUNCTION MODULE- (V14283)		1
X12-DAB	MRTB20E04-111	.TERMINAL JUNCTION MODULE- (V14283)		1
X13-DAB	MRTB20E04-111	.TERMINAL JUNCTION MODULE- (V14283)		1
X14-DAB	MRTB20E04-111	.TERMINAL JUNCTION MODULE- (V14283)		1
X15-DAB	MRTB20E04-111	.TERMINAL JUNCTION MODULE- (V14283)		1
X8-DAB	MRTB20E04-111	.TERMINAL JUNCTION MODULE- (V14283)		1
Y1-DAB	MRTB20E04-111	.TERMINAL JUNCTION MODULE- (V14283)		1
Y2-DAB	MRTB20E04-111	.TERMINAL JUNCTION MODULE- (V14283)		1
Y3-DAB	MRTB20E04-111	.TERMINAL JUNCTION MODULE- (V14283)		1
Y4-DAB	MRTB20E04-111	.TERMINAL JUNCTION MODULE- (V14283)		1
Y5-DAB	MRTB16E04-111	.TERMINAL JUNCTION MODULE- (V14283)		1
		MISSING ITEM NO. NOT APPLICABLE		

– ITEM NOT ILLUSTRATED

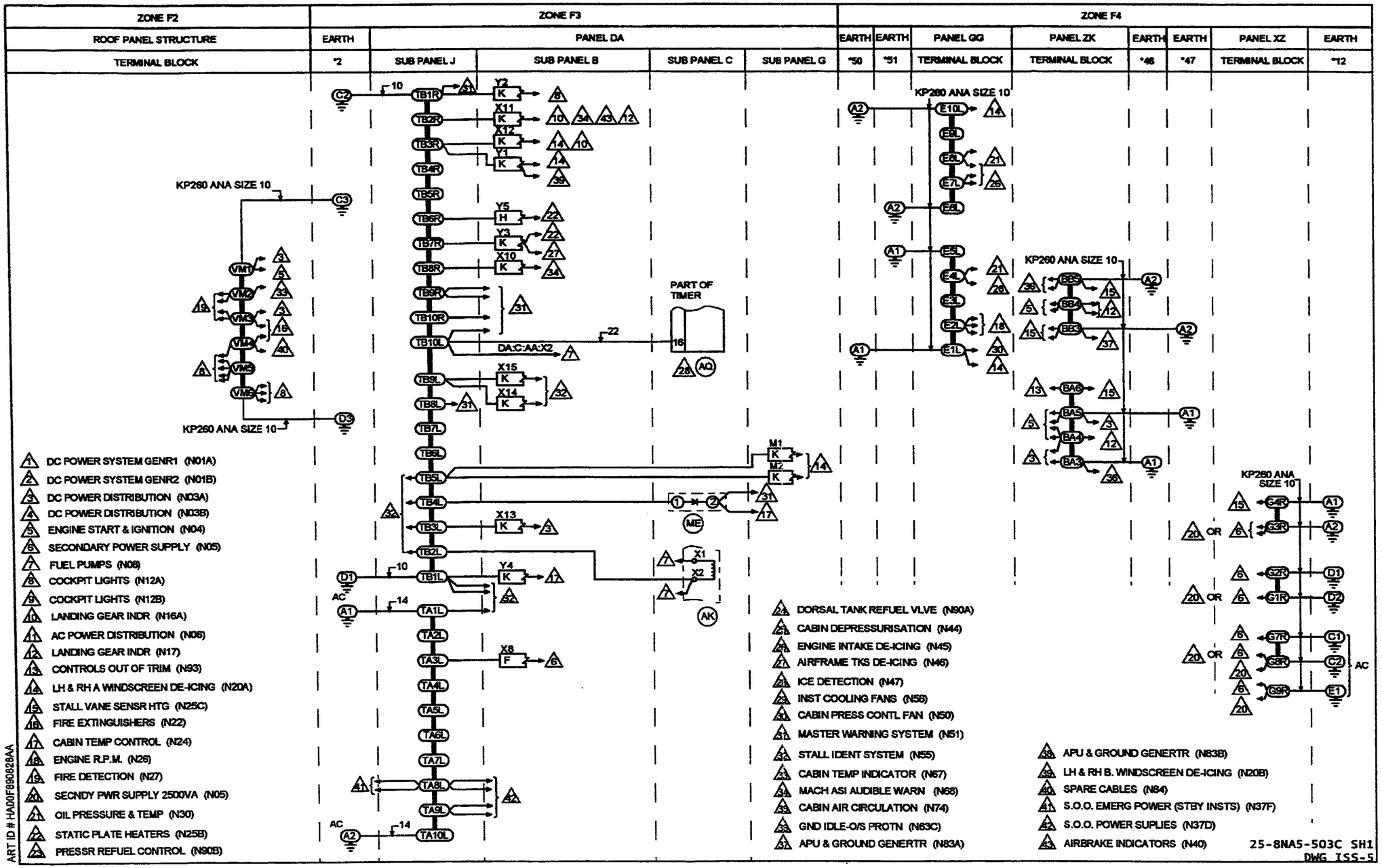
ZONE F2
ZONE F3
ZONE F4
ROOF PANEL STRUCTURE
EARTH
PANEL DA
EARTH
EARTH
PANEL GG
PANEL ZK
EARTH
EARTH
PANEL XZ
EARTH
TERMINAL BLOCK
*2
SUB PANEL J
SUB PANEL B
SUB PANEL C
SUB PANEL G
*50
*51
TERMINAL BLOCK
TERMINAL BLOCK
*46
*47
TERMINAL BLOCK
*12
KP260 ANA SIZE 10
PART OF TIMER
DA:C:AA:X2
1 DC POWER SYSTEM GENR1 (N01A)
2 DC POWER SYSTEM GENR2 (N01B)
3 DC POWER DISTRIBUTION (N03A)
4 DC POWER DISTRIBUTION (N03B)
5 ENGINE START & IGNITION (N04)
6 SECONDARY POWER SUPPLY (N05)
7 FUEL PUMPS (N08)
8 COCKPIT LIGHTS (N12A)
9 COCKPIT LIGHTS (N12B)
10 LANDING GEAR INDR (N16A)
11 AC POWER DISTRIBUTION (N06)
12 LANDING GEAR INDR (N17)
13 CONTROLS OUT OF TRIM (N93)
14 LH & RH A WINDSCREEN DE-ICING (N20A)
15 STALL VANE SENSR HTG (N25C)
16 FIRE EXTINGUISHERS (N22)
17 CABIN TEMP CONTROL (N24)
18 ENGINE R.P.M. (N26)
19 FIRE DETECTION (N27)
20 SECNDY PWR SUPPLY 2500VA (N05)
21 OIL PRESSURE & TEMP (N30)
22 STATIC PLATE HEATERS (N25B)
23 PRESSR REFUEL CONTROL (N90B)
24 DORSAL TANK REFUEL VLVE (N90A)
25 CABIN DEPRESSURISATION (N44)
26 ENGINE INTAKE DE-ICING (N45)
27 AIRFRAME TKS DE-ICING (N46)
28 ICE DETECTION (N47)
29 INST COOLING FANS (N56)
30 CABIN PRESS CONTL FAN (N50)
31 MASTER WARNING SYSTEM (N51)
32 STALL IDENT SYSTEM (N55)
33 CABIN TEMP INDICATOR (N67)
34 MACH ASI AUDIBLE WARN (N68)
35 CABIN AIR CIRCULATION (N74)
36 GND IDLE-O/S PROTN (N63C)
37 APU & GROUND GENERTR (N83A)
38 APU & GROUND GENERTR (N83B)
39 LH & RH B. WINDSCREEN DE-ICING (N20B)
40 SPARE CABLES (N84)
41 S.O.O. EMERG POWER (STBY INSTS) (N37F)
42 S.O.O. POWER SUPLIES (N37D)
43 AIRBRAKE INDICATORS (N40)
25-8NA5-503C SH1
DWG ISS-5
ART ID # HA00F890828AA

IDENT	PART NUMBER	1234567 NOMENCLATURE	EFFECT FROM TO	UNITS PER ASSY
		EARTH CHAIN	152276	
	25-8NA5-503C	WIRING DIAGRAM- (MOD 253214A) (MOD 25F505A)		RF
AK-DAC	9330-4026	.RELAY- (VK6265)		1
AQ-DAC	25-8NF4661-1A	.TIME DELAY UNIT		1
BA-ZK	HWBUN1146S10B	.TERMINAL BLOCK- (VK0574)		1
BB-ZK	HWBUN1146S10B	.TERMINAL BLOCK- (VK0574)		1
E-GG	HWBUN1146D10B	.TERMINAL BLOCK- (VK0574)		1
G-XZ	HWBUN1146D10B	.TERMINAL BLOCK- (VK0574)		1
ME-DAC	BYW54	.DIODE- (VK0004)		1
M1-DAG	MRTB20E04-111	.TERMINAL JUNCTION MODULE- (V14283)		1
M2-DAG	MRTB20E04-111	.TERMINAL JUNCTION MODULE- (V14283)		1
TA-DAJ	HWB1736D10B	.TERMINAL BLOCK- (VK0574)		1
TB-DAJ	HWB1736D10B	.TERMINAL BLOCK- (VK0574)		1
VM	HWBUN1146S10B	.TERMINAL BLOCK- (VK0574)		1
X10-DAB	MRTB20E04-111	.TERMINAL JUNCTION MODULE- (V14283)		1
X11-DAB	MRTB20E04-111	.TERMINAL JUNCTION MODULE- (V14283)		1
X12-DAB	MRTB20E04-111	.TERMINAL JUNCTION MODULE- (V14283)		1
X13-DAB	MRTB20E04-111	.TERMINAL JUNCTION MODULE- (V14283)		1
X14-DAB	MRTB20E04-111	.TERMINAL JUNCTION MODULE- (V14283)		1
X15-DAB	MRTB20E04-111	.TERMINAL JUNCTION MODULE- (V14283)		1
X8-DAB	MRTB20E04-111	.TERMINAL JUNCTION MODULE- (V14283)		1
Y1-DAB	MRTB20E04-111	.TERMINAL JUNCTION MODULE- (V14283)		1
Y2-DAB	MRTB20E04-111	.TERMINAL JUNCTION MODULE- (V14283)		1
Y3-DAB	MRTB20E04-111	.TERMINAL JUNCTION MODULE- (V14283)		1
Y4-DAB	MRTB20E04-111	.TERMINAL JUNCTION MODULE- (V14283)		1
		MISSING ITEM NO. NOT APPLICABLE		

– ITEM NOT ILLUSTRATED

IDENT	PART NUMBER	1234567 NOMENCLATURE	EFFECT FROM TO	UNITS PER ASSY
Y5-DAB	MRTB16E04-111	.TERMINAL JUNCTION MODULE- (V14283)		1
		MISSING ITEM NO. NOT APPLICABLE		

– ITEM NOT ILLUSTRATED

CHAPTER

26

FIRE PROTECTION

CHAPTER 26 - FIRE PROTECTION

TABLE OF CONTENTS

SUBJECT	CHAPTER SECTION UNIT	FIGURE	EFFECT
DETECTION	26-10-00		
FIRE DETECTION	26-10-10	3	091276
REAR EQUIPMENT BAY OVERHEAT DETECTORS	26-10-30	3	091276
REAR LUGGAGE BAY SMOKE DETECTION	26-10-20	2	091179
			181234
			236236
			238276

CHAPTER 26 - FIRE PROTECTION

TABLE OF CONTENTS

SUBJECT	CHAPTER SECTION UNIT	FIGURE	EFFECT
EXTINGUISHING	26-20-00		
FIRE EXTINGUISHERS	26-20-10	3	091276

CH-SECT-UNIT-FIG	PAGE NO.	DATE
*26	1	AUG 31/03
*26	2	AUG 31/03
26-10-00	1	MAY 31/02
26-10-10- 3	0	NOV 30/02
*26-10-10- 3	1	AUG 31/03
*26-10-10- 3	2	AUG 31/03
*26-10-10- 3	3	AUG 31/03
*26-10-10- 3	4	AUG 31/03
*26-10-10- 3	5	AUG 31/03
26-10-10- 3	6	MAY 31/02
26-10-10- 3	7	MAY 31/02
26-10-20- 2	0	MAY 31/02
26-10-20- 2	1	MAY 31/02
26-10-20- 2	2	MAY 31/02
26-10-30- 3	0	MAY 31/02
26-10-30- 3	1	MAY 31/02
26-10-30- 3	2	MAY 31/02
26-10-30- 3	3	MAY 31/02
26-20-00	1	MAY 31/02
26-20-10- 3	0	MAY 31/02
26-20-10- 3	1	MAY 31/02
26-20-10- 3	2	MAY 31/02
26-20-10- 3	3	MAY 31/02
26-20-10- 3	4	MAY 31/02

CH-SECT-UNIT-FIG	PAGE NO.	DATE

*THE ASTERISK INDICATES PAGES CHANGED OR ADDED BY THE CURRENT REVISION

DETECTION

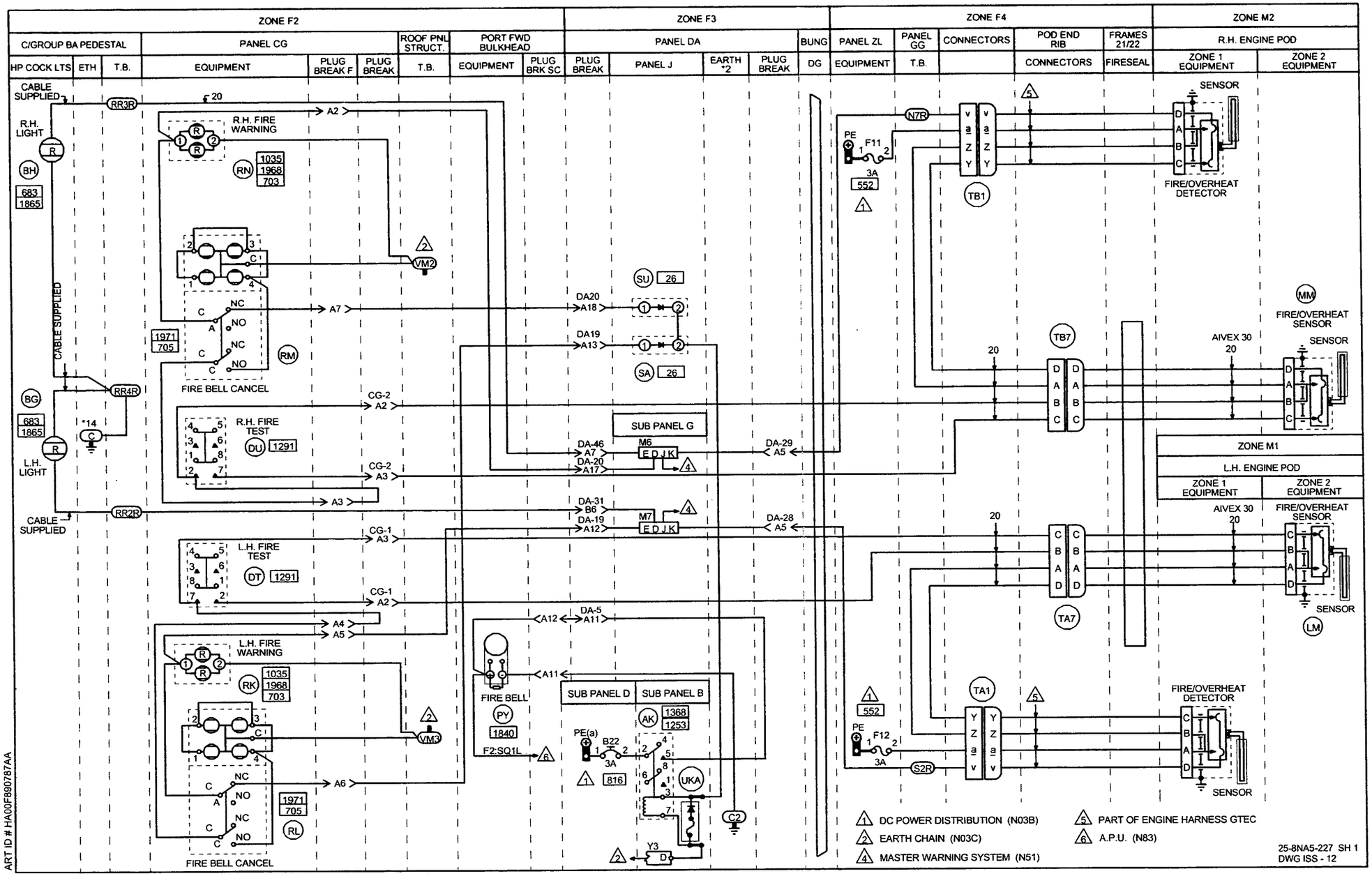
ZONE F2
ZONE F3
ZONE F4
ZONE M2
C/GROUP BA PEDESTAL
PANEL CG
ROOF PNL STRUCT.
PORT FWD BULKHEAD
PANEL DA
BUNG
PANEL ZL
PANEL GG
CONNECTORS
POD END RIB
FRAMES 21/22
R.H. ENGINE POD
HP COCK LTS
ETH
T.B.
EQUIPMENT
PLUG BREAK F
PLUG BREAK
T.B.
EQUIPMENT
PLUG BRK SC
PLUG BREAK
PANEL J
EARTH *2
PLUG BREAK
DG
EQUIPMENT
T.B.
CONNECTORS
FIRESEAL
ZONE 1 EQUIPMENT
ZONE 2 EQUIPMENT
CABLE SUPPLIED
R.H. LIGHT
L.H. LIGHT
R.H. FIRE WARNING
FIRE BELL CANCEL
R.H. FIRE TEST
L.H. FIRE TEST
L.H. FIRE WARNING
FIRE BELL
SUB PANEL G
SUB PANEL D
SUB PANEL B
SENSOR
FIRE/OVERHEAT DETECTOR
FIRE/OVERHEAT SENSOR
AIVEX 30
ZONE M1
L.H. ENGINE POD
DC POWER DISTRIBUTION (N03B)
EARTH CHAIN (N03C)
MASTER WARNING SYSTEM (N51)
PART OF ENGINE HARNESS GTEC
A.P.U. (N83)
25-8NA5-227 SH 1
DWG ISS - 12
ART ID # HA00F890787AA

	IDENT	PART NUMBER	1234567 NOMENCLATURE	EFFECT FROM TO	UNITS PER ASSY
			FIRE DETECTION	091276	
R		25-8NA5-227	WIRING DIAGRAM-		RF
R			(MOD 253149C)		
R			(MOD 25F505A)		
R			(MOD 25F973A)		
	AK-DAB	HDS8SF3J06	.RELAY-		1
			(VK1793)		
			(USED WITH SOCKET:		
			RSE120074		
			(V58982))		
	BG-BA	01-0923	.PILLAR LAMP-		1
			(VK0690)		
	BH-BA	01-0923	.PILLAR LAMP-		1
			(VK0690)		
	B22-DAD	483TCG11J25-3A	.CIRCUIT BREAKER-3AMP		1
			(VU0091)		
	CG1-P	MTC100YH2-009	.SHELL-PLUG	091254	1
			(VK1010)		
			(USED WITH WAFERS:		
			TYPE A, MTC100KT2-1101		
			TYPE B, MTC100KT2-1102)		
	CG1-P	MTC100YH2-009	.SHELL-PLUG	255276	1
			(VK1010)		
			(USED WITH INSERTS:		
			PRIMARY MTC100YC1-001		
			SECONDARY MTC100YC1-002)		
	CG1-R	MTC100YH2-010	.SHELL-RECEPTACLE	091254	1
			(VK1010)		
			(USED WITH WAFERS:		
			TYPE A, MTC100KT2-1103		
			TYPE B, MTC100KT2-1104)		
	CG1-R	MTC100YH2-010	.SHELL-RECEPTACLE	255276	1
			(VK1010)		
			(USED WITH INSERTS:		
			PRIMARY MTC100YC1-003		
			SECONDARY MTC100YC1-004)		
	CG2-P	MTC100YH2-009	.SHELL-PLUG	091254	1
			(VK1010)		
			(USED WITH WAFERS:		
			TYPE A, MTC100KT2-1101		
			TYPE B, MTC100KT2-1102)		
	CG2-P	MTC100YH2-009	.SHELL-PLUG	255276	1
			(VK1010)		
			(USED WITH INSERTS:		
			PRIMARY MTC100YC1-001		
			SECONDARY MTC100YC1-002)		
			MISSING ITEM NO. NOT APPLICABLE		

– ITEM NOT ILLUSTRATED

IDENT	PART NUMBER	1234567 NOMENCLATURE	EFFECT FROM TO	UNITS PER ASSY
CG2-R	MTC100YH2-010	.SHELL-RECEPTACLE (VK1010) (USED WITH WAFERS: TYPE A, MTC100KT2-1103 TYPE B, MTC100KT2-1104)	091254	1
CG2-R	MTC100YH2-010	.SHELL-RECEPTACLE (VK1010) (USED WITH INSERTS: PRIMARY MTC100YC1-003 SECONDARY MTC100YC1-004)	255276	1
DA19-P	MTC100YH2-009	.SHELL-PLUG (VK1010) (USED WITH WAFERS: TYPE A, MTC100KT2-1101 TYPE B, MTC100KT2-1102)	091254	1
DA19-P	MTC100YH2-009	.SHELL-PLUG (VK1010) (USED WITH INSERTS: PRIMARY MTC100YC1-001 SECONDARY MTC100YC1-002)	255276	1
DA19-R	MTC100YH2-010	.SHELL-RECEPTACLE (VK1010) (USED WITH WAFERS: TYPE A, MTC100KT2-1103 TYPE B, MTC100KT2-1104)	091254	1
DA19-R	MTC100YH2-010	.SHELL-RECEPTACLE (VK1010) (USED WITH INSERTS: PRIMARY MTC100YC1-003 SECONDARY MTC100YC1-004)	255276	1
DA20-P	MTC100YH2-009	.SHELL-PLUG (VK1010) (USED WITH WAFERS: TYPE A, MTC100KT2-1101 TYPE B, MTC100KT2-1102)	091254	1
DA20-P	MTC100YH2-009	.SHELL-PLUG (VK1010) (USED WITH INSERTS: PRIMARY MTC100YC1-001 SECONDARY MTC100YC1-002)	255276	1
DA20-R	MTC100YH2-010	.SHELL-RECEPTACLE (VK1010) (USED WITH WAFERS: TYPE A, MTC100KT2-1103 TYPE B, MTC100KT2-1104)	091254	1
DA20-R	MTC100YH2-010	.SHELL-RECEPTACLE (VK1010) (USED WITH INSERTS: PRIMARY MTC100YC1-003 SECONDARY MTC100YC1-004)	255276	1
		MISSING ITEM NO. NOT APPLICABLE		

– ITEM NOT ILLUSTRATED

IDENT	PART NUMBER	1 2 3 4 5 6 7 NOMENCLATURE	EFFECT FROM TO	UNITS PER ASSY
DA28-P	MTC100YH1-003	.SHELL-PLUG (VK1010) (USED WITH WAFERS: TYPE A, MTC100KT1-1101 TYPE B, MTC100KT1-1102)	091254	1
DA28-P	MTC100YH1-003	.SHELL-PLUG (VK1010) (USED WITH INSERT: MTC100YC1-005)	255276	1
DA28-R	MTC100YH1-004	.SHELL-RECEPTACLE (VK1010) (USED WITH WAFERS: TYPE A, MTC100KT1-1103 TYPE B, MTC100KT1-1104)	091254	1
DA28-R	MTC100YH1-004	.SHELL-RECEPTACLE (VK1010) (USED WITH INSERT: MTC100YC1-006)	255276	1
DA29-P	MTC100YH1-003	.SHELL-PLUG (VK1010) (USED WITH WAFERS: TYPE A, MTC100KT1-1101 TYPE B, MTC100KT1-1102)	091254	1
DA29-P	MTC100YH1-003	.SHELL-PLUG (VK1010) (USED WITH INSERT: MTC100YC1-005)	255276	1
DA29-R	MTC100YH1-004	.SHELL-RECEPTACLE (VK1010) (USED WITH WAFERS: TYPE A, MTC100KT1-1103 TYPE B, MTC100KT1-1104)	091254	1
DA29-R	MTC100YH1-004	.SHELL-RECEPTACLE (VK1010) (USED WITH INSERT: MTC100YC1-006)	255276	1
DA31-P	MTC100YH2-009	.SHELL-PLUG (VK1010) (USED WITH WAFERS: TYPE A, MTC100KT2-1101 TYPE B, MTC100KT2-1102)	091254	1
DA31-P	MTC100YH2-009	.SHELL-PLUG (VK1010) (USED WITH INSERTS: PRIMARY MTC100YC1-001 SECONDARY MTC100YC1-002)	255276	1
		MISSING ITEM NO. NOT APPLICABLE		

– ITEM NOT ILLUSTRATED

IDENT	PART NUMBER	1234567 NOMENCLATURE	EFFECT FROM TO	UNITS PER ASSY
DA31-R	MTC100YH2-010	.SHELL-RECEPTACLE (VK1010) (USED WITH WAFERS: TYPE A, MTC100KT2-1103 TYPE B, MTC100KT2-1104)	091254	1
DA31-R	MTC100YH2-010	.SHELL-RECEPTACLE (VK1010) (USED WITH INSERTS: PRIMARY MTC100YC1-003 SECONDARY MTC100YC1-004)	255276	1
DA46-P	MTC100YH1-003	.SHELL-PLUG (VK1010) (USED WITH WAFERS: TYPE A, MTC100KT1-1101 TYPE B, MTC100KT1-1102)	091254	1
DA46-P	MTC100YH1-003	.SHELL-PLUG (VK1010) (USED WITH INSERT: MTC100YC1-005)	255276	1
DA46-R	MTC100YH1-004	.SHELL-RECEPTACLE (VK1010) (USED WITH WAFERS: TYPE A, MTC100KT1-1103 TYPE B, MTC100KT1-1104)	091254	1
DA46-R	MTC100YH1-004	.SHELL-RECEPTACLE (VK1010) (USED WITH INSERT: MTC100YC1-006)	255276	1
DA5-P	MTC100YH2-009	.SHELL-PLUG (VK1010) (USED WITH WAFERS: TYPE A, MTC100KT2-1101 TYPE B, MTC100KT2-1102)	091254	1
DA5-P	MTC100YH2-009	.SHELL-PLUG (VK1010) (USED WITH INSERTS: PRIMARY MTC100YC1-001 SECONDARY MTC100YC1-002)	255276	1
DA5-R	MTC100YH2-010	.SHELL-RECEPTACLE (VK1010) (USED WITH WAFERS: TYPE A, MTC100KT2-1103 TYPE B, MTC100KT2-1104)	091254	1
DA5-R	MTC100YH2-010	.SHELL-RECEPTACLE (VK1010) (USED WITH INSERTS: PRIMARY MTC100YC1-003 SECONDARY MTC100YC1-004)	255276	1
DG	422255-8	.BUNG- (VK1793)		1
		MISSING ITEM NO. NOT APPLICABLE		

– ITEM NOT ILLUSTRATED

IDENT	PART NUMBER	1234567 NOMENCLATURE	EFFECT FROM TO	UNITS PER ASSY
DT-CG	WC1503	.SWITCH- (VK0653)		1
DU-CG	WC1503	.SWITCH- (VK0653)		1
F-CG-P	MTC100YH1-003	.SHELL-PLUG (VK1010) (USED WITH WAFERS: TYPE A, MTC100KT1-1103 TYPE B, MTC100KT1-1104)	091254	1
F-CG-P	MTC100YH1-003	.SHELL-PLUG (VK1010) (USED WITH INSERT: MTC100YC1-006)	255276	1
F-CG-R	MTC100YH1-004	.SHELL-RECEPTACLE (VK1010) (USED WITH WAFERS: TYPE A, MTC100KT1-1101 TYPE B, MTC100KT1-1102)	091254	1
F-CG-R	MTC100YH1-004	.SHELL-RECEPTACLE (VK1010) (USED WITH INSERT: MTC100YC1-005)	255276	1
F11-ZL	5920-99-0120075	.FUSE-3AMP (VK0657)		1
F12-ZL	5920-99-0120075	.FUSE-3AMP (VK0657)		1
LM	3001-133	.DETECTOR-FIRE/OVERHEAT (VK7761) (USED WITH: CONNECTOR MS3456KT14S5S OUTLET MS3417-14N (V96906))		1
MM	3001-133	.DETECTOR-FIRE/OVERHEAT (VK7761) (USED WITH: CONNECTOR MS3456KT14S5S OUTLET MS3417-14N (V96906))		1
M6-DAG	MRTB20E57-111	.TERMINAL JUNCTION MODULE- (V14283)		1
M7-DAG	MRTB20E57-111	.TERMINAL JUNCTION MODULE- (V14283)		1
N-GG	HWBUN1146D10B	.TERMINAL BLOCK- (VK0574)		1
PY	25-7NF2257-1A	.BELL-WARNING,FIRE (PRE MOD 253523A) (FOR SPARES PROCURE 25-8NF5031-1A)	091276	1
		MISSING ITEM NO. NOT APPLICABLE		

– ITEM NOT ILLUSTRATED

IDENT	PART NUMBER	1234567 NOMENCLATURE	EFFECT FROM TO	UNITS PER ASSY
PY	25-8NF5031-1A	.BELL-WARNING,FIRE (MOD 253523A) (PRE MOD 253561D) (FOR SPARES PROCURE IN LIEU OF 25-7NF2257-1A) (FOR SPARES PROCURE 25-8NF6225-1A)	091276	1
PY	25-8NF6225-1A	.BELL-WARNING,FIRE (MOD 253561D) (FOR SPARE PROCURE IN LIEU OF 25-8NF5031-1A)	091276	1
RK-CG	C9032-047	.LIGHT MODULE- (VK0673)		1
RL-CG	99-222	.PUSHBUTTON SWITCH- (V32245)		1
RM-CG	99-222	.PUSHBUTTON SWITCH- (V32245)		1
RN-CG	C9032-048	.LIGHT MODULE- (VK0673)		1
RR-BA	HWBUN1146D10B	.TERMINAL BLOCK- (VK0574)		1
S-GG	HWBUN1146D10B	.TERMINAL BLOCK- (VK0574)		1
SA-DAJ	CV7313	.DIODE- (VK0004)		1
SC-P	MTC100YH2-009	.SHELL-PLUG (VK1010) (USED WITH WAFERS: TYPE A, MTC100KT2-1103 DUMMY B, MTCX2X200-200)	091254	1
SC-P	MTC100YH2-009	.SHELL-PLUG (VK1010) (USED WITH INSERTS: PRIMARY MTC100YC1-003 SECONDARY MTC100YC1-004)	255276	1
SC-R	MTC100YH2-010	.SHELL-RECEPTACLE (VK1010) (USED WITH WAFERS: TYPE A, MTC100KT2-1101 DUMMY B, MTCX2X200-200)	091254	1
SC-R	MTC100YH2-010	.SHELL-RECEPTACLE (VK1010) (USED WITH INSERTS: PRIMARY MTC100YC1-001 SECONDARY MTC100YC1-002)	255276	1
SU-DAJ	CV7313	.DIODE- (VK0004)		1
		MISSING ITEM NO. NOT APPLICABLE		

– ITEM NOT ILLUSTRATED

IDENT	PART NUMBER	1234567 NOMENCLATURE	EFFECT FROM TO	UNITS PER ASSY
TA1-R	D38999-20KG39SN	.CONNECTOR-SOCKET (VU0026)		1
TA7-P	MS3456KT14S5P	.CONNECTOR-PIN (V96906) (USED WITH OUTLET: MS3417-14N)		1
TA7-R	MS3450KT14S5S	.CONNECTOR-SOCKET (V96906) (USED WITH OUTLET: MS3417-14N)		1
TB1-R	D38999-20KG39SN	.CONNECTOR-SOCKET (VU0026) (USED WITH CLAMP: G8801S21)		1
TB7-P	MS3456KT14S5P	.CONNECTOR-PIN (V96906) (USED WITH OUTLET: MS3417-14N)		1
TB7-R	MS3450KT14S5S	.CONNECTOR-SOCKET (V96906) (USED WITH OUTLET: MS3417-14N)		1
VM	HWBUN1146S10B	.TERMINAL BLOCK- (VK0574)		1
Y3-DAB	MRTB20E04-111	.TERMINAL JUNCTION MODULE- (V14283)		1
		MISSING ITEM NO. NOT APPLICABLE		

— ITEM NOT ILLUSTRATED

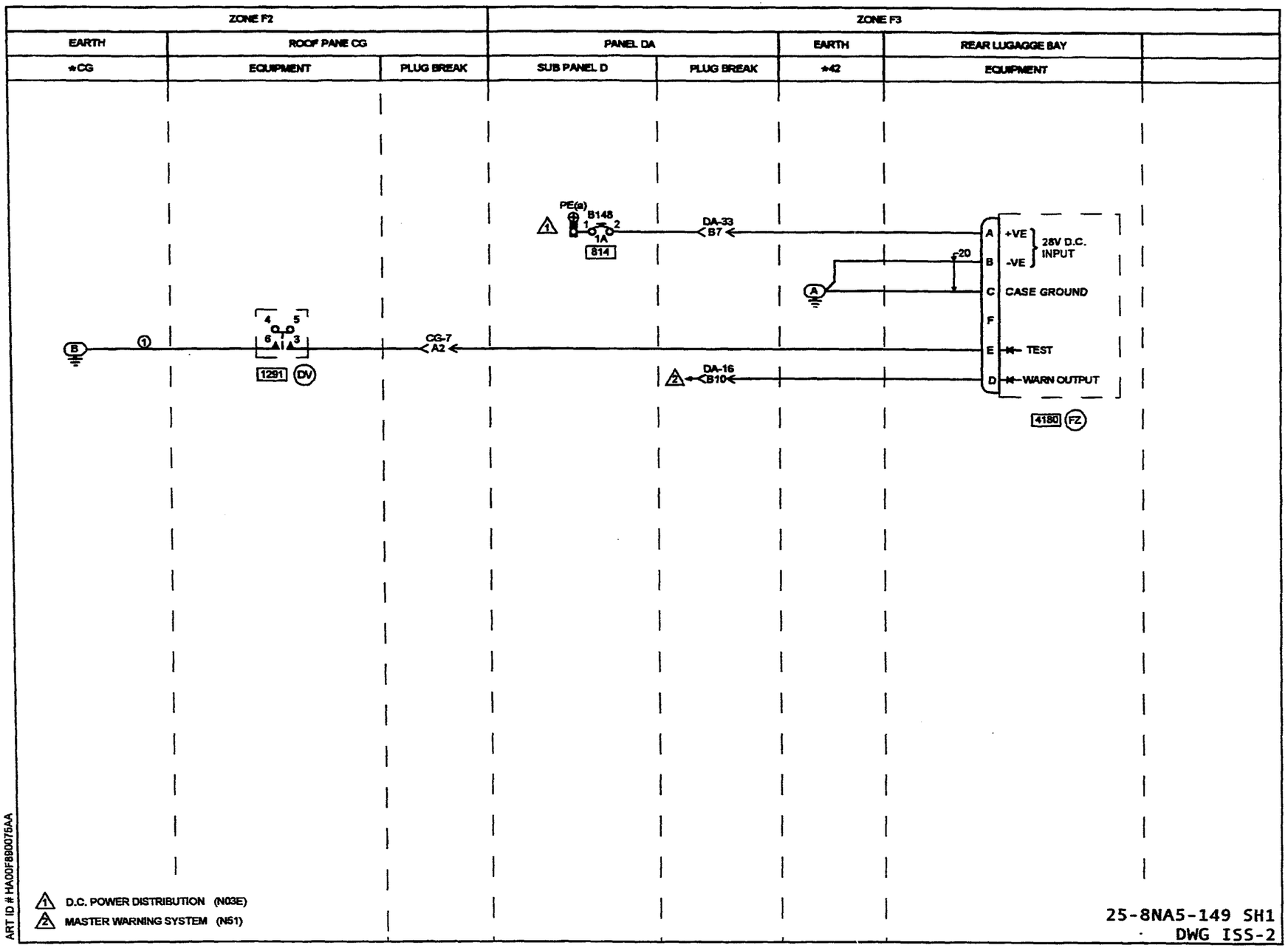
ZONE F2
ZONE F3
EARTH
ROOF PANE CG
PANEL DA
EARTH
REAR LUGAGGE BAY
*CG
EQUIPMENT
PLUG BREAK
SUB PANEL D
PLUG BREAK
*42
EQUIPMENT
PE(a)
B148
1
2
1A
814
DA-33
B7
20
A
+VE
-VE
28V D.C.
INPUT
C
CASE GROUND
F
E
TEST
D
WARN OUTPUT
4180
FZ
B
1
4
5
6
7
3
1291
DV
CG-7
A2
DA-16
B10
D.C. POWER DISTRIBUTION (N03E)
MASTER WARNING SYSTEM (N51)
25-8NA5-149 SH1
DWG ISS-2
ART ID # HA00F88007 5AA

IDENT	PART NUMBER	1234567 NOMENCLATURE	EFFECT FROM TO	UNITS PER ASSY
		REAR LUGGAGE BAY SMOKE DETECTION	091179 181234 236236 238276	
	25-8NA5-149	WIRING DIAGRAM- (MOD 253149C) (MOD 259429B) (MOD 259434B) (MOD 259479A) (MOD 25A096A) (MOD 25A096B) (MOD 25A529A)		RF
B148-DAD	483TCG11J25-1A	.CIRCUIT BREAKER-1A (VU0091)		1
CG7-P	MTC100YH2-009	.SHELL-PLUG (VK1010) (USED WITH WAFERS: TYPE A,MTC100KT2-1101 TYPE B,MTC100KT2-1102)	091179 181234 236236 238254	1
CG7-P	MTC100YH2-009	.SHELL-PLUG (VK1010) (USED WITH INSERTS: PRIMARY MTC100YC1-001 SECONDARY MTC100YC1-002) (MOD 253252A)	255276	1
CG7-R	MTC100YH2-010	.SHELL-RECEPTACLE (VK1010) (USED WITH WAFERS: TYPE A,MTC100KT2-1103 TYPE B,MTC100KT2-1104)	091179 181234 236236 238254	1
CG7-R	MTC100YH2-010	.SHELL-RECEPTACLE (VK1010) (USED WITH INSERTS: PRIMARY MTC100YC1-003 SECONDARY MTC100YC1-004) (MOD 253252A)	255276	1
DA16-P	MTC100YH1-003	.SHELL-PLUG (VK1010) (USED WITH WAFERS: TYPE A,MTC100KT1-1101 TYPE B,MTC100KT1-1102)	091179 181234 236236 238254	1
DA16-P	MTC100YH1-003	.SHELL-PLUG (VK1010) (USED WITH INSERT: MTC100YC1-005) (MOD 253252A)	255276	1
		MISSING ITEM NO. NOT APPLICABLE		

– ITEM NOT ILLUSTRATED

IDENT	PART NUMBER	1234567 NOMENCLATURE	EFFECT FROM TO	UNITS PER ASSY
DA16-R	MTC100YH1-004	.SHELL-RECEPTACLE (VK1010) (USED WITH WAFERS: TYPE A, MTC100KT1-1103 TYPE B, MTC100KT1-1104)	091179 181234 236236 238254	1
DA16-R	MTC100YH1-004	.SHELL-RECEPTACLE (VK1010) (USED WITH INSERT: MTC100YC1-006) (MOD 253252A)	255276	1
DA33-P	MTC100YH2-009	.SHELL-PLUG (VK1010) (USED WITH WAFERS: TYPE A,MTC100KT2-1101 TYPE B,MTC100KT2-1102)	091179 181234 236236 238254	1
DA33-P	MTC100YH2-009	.SHELL-PLUG (VK1010) (USED WITH INSERTS: PRIMARY MTC100YC1-001 SECONDARY MTC100YC1-002) (MOD 253252A)	255276	1
DA33-R	MTC100YH2-010	.SHELL-RECEPTACLE (VK1010) (USED WITH WAFERS: TYPE A,MTC100KT2-1103 TYPE B,MTC100KT2-1104)	091179 181234 236236 238254	1
DA33-R	MTC100YH2-010	.SHELL-RECEPTACLE (VK1010) (USED WITH INSERTS: PRIMARY MTC100YC1-003 SECONDARY MTC100YC1-004) (MOD 253252A)	255276	1
DV-CG	WC1503	.SWITCH- (VK0653)		1
FZ	CG7PT	.SMOKE DETECTOR- (V+0225)		1
FZ-R	125REF000000425	.CONNECTOR-SOCKET (8525-16R10B6SN002) (VK4161) (OPT PVWR610-6SNS57) (V+0862))		1

MISSING ITEM NO. NOT APPLICABLE

– ITEM NOT ILLUSTRATED

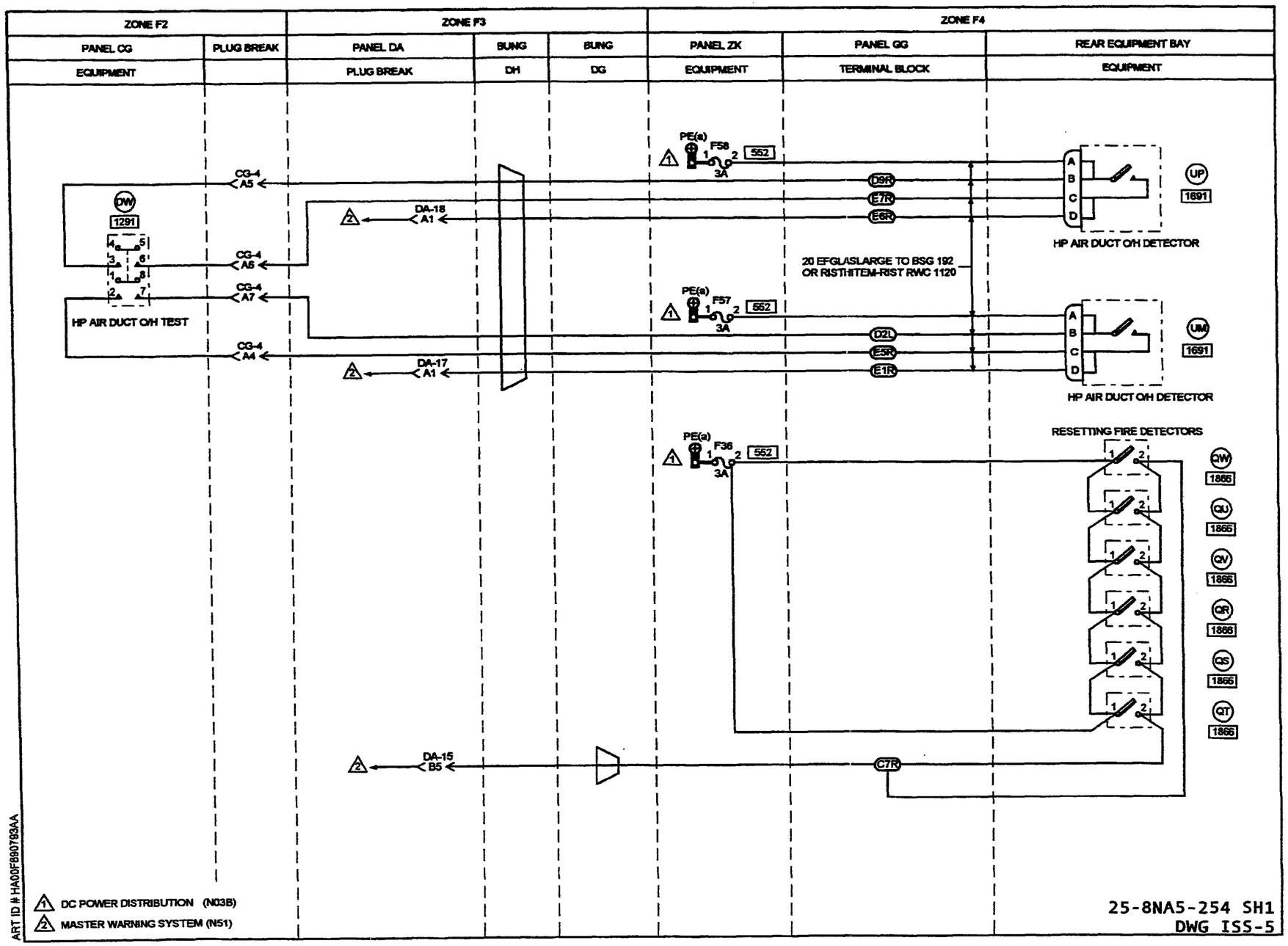
ZONE F2
ZONE F3
ZONE F4
PANEL CG
PLUG BREAK
PANEL DA
BUNG
BUNG
PANEL ZK
PANEL GG
REAR EQUIPMENT BAY
EQUIPMENT
PLUG BREAK
DH
DG
EQUIPMENT
TERMINAL BLOCK
EQUIPMENT
DW
1291
HP AIR DUCT O/H TEST
CG-4 A5
CG-4 A6
CG-4 A7
CG-4 A4
DA-18 A1
DA-17 A1
DA-15 B5
PE(a) F58 552 3A
PE(a) F57 552 3A
PE(a) F36 552 3A
D9R
E7R
E6R
D2L
E5R
E1R
C7R
20 EFGLASLARGE TO BSG 192
OR RISTHITEM-RIST RWC 1120
UP
1691
HP AIR DUCT O/H DETECTOR
UM
1691
HP AIR DUCT O/H DETECTOR
RESETTING FIRE DETECTORS
QW 1865
QU 1865
QV 1865
QR 1865
QS 1865
QT 1865
DC POWER DISTRIBUTION (N03B)
MASTER WARNING SYSTEM (N51)
ART ID # HA00F890783AA
25-8NA5-254 SH1
DWG ISS-5

IDENT	PART NUMBER	1234567 NOMENCLATURE	EFFECT FROM TO	UNITS PER ASSY
		REAR EQUIPMENT BAY OVERHEAT DETECTORS	091276	
	25-8NA5-254	WIRING DIAGRAM- (MOD 253149C) (MOD 25F505A)		RF
C-GG	HWBUN1146D10B	.TERMINAL BLOCK- (VK0574)		1
CG4-P	MTC100YH1-003	.SHELL-PLUG (VK1010) (USED WITH WAFERS: TYPE A, MTC100KT1-1101 TYPE B, MTC100KT1-1102)	091254	1
CG4-P	MTC100YH1-003	.SHELL-PLUG (VK1010) (USED WITH INSERT: MTC100YC1-005)	255276	1
CG4-R	MTC100YH1-004	.SHELL-RECEPTACLE (VK1010) (USED WITH WAFERS: TYPE A, MTC100KT1-1103 TYPE B, MTC100KT1-1104)	091254	1
CG4-R	MTC100YH1-004	.SHELL-RECEPTACLE (VK1010) (USED WITH INSERT: MTC100YC1-006)	255276	1
D-GG	HWBUN1146D10B	.TERMINAL BLOCK- (VK0574)		1
DA15-P	MTC100YH1-003	.SHELL-PLUG (VK1010) (USED WITH WAFERS: TYPE A, MTC100KT1-1101 TYPE B, MTC100KT1-1102)	091254	1
DA15-P	MTC100YH1-003	.SHELL-PLUG (VK1010) (USED WITH INSERT: MTC100YC1-005)	255276	1
DA15-R	MTC100YH1-004	.SHELL-RECEPTACLE (VK1010) (USED WITH WAFERS: TYPE A, MTC100KT1-1103 TYPE B, MTC100KT1-1104)	091254	1
DA15-R	MTC100YH1-004	.SHELL-RECEPTACLE (VK1010) (USED WITH INSERT: MTC100YC1-006)	255276	1
DA17-P	MTC100YH1-003	.SHELL-PLUG (VK1010) (USED WITH WAFERS: TYPE A, MTC100KT1-1101 DUMMY, MTCX1X100-100)	091254	1
		MISSING ITEM NO. NOT APPLICABLE		

– ITEM NOT ILLUSTRATED

IDENT	PART NUMBER	1234567 NOMENCLATURE	EFFECT FROM TO	UNITS PER ASSY
DA17-P	MTC100YH1-003	.SHELL-PLUG (VK1010) (USED WITH INSERT: MTC100YC1-005)	255276	1
DA17-R	MTC100YH1-004	.SHELL-RECEPTACLE (VK1010) (USED WITH WAFERS: TYPE A, MTC100KT1-1103 DUMMY, MTCX1X100-100)	091254	1
DA17-R	MTC100YH1-004	.SHELL-RECEPTACLE (VK1010) (USED WITH INSERT: MTC100YC1-006)	255276	1
DA18-P	MTC100YH1-003	.SHELL-PLUG (VK1010) (USED WITH WAFERS: TYPE A, MTC100KT1-1101 DUMMY, MTCX1X100-100)	091254	1
DA18-P	MTC100YH1-003	.SHELL-PLUG (VK1010) (USED WITH INSERT: MTC100YC1-005)	255276	1
DA18-R	MTC100YH1-004	.SHELL-RECEPTACLE (VK1010) (USED WITH WAFERS: TYPE A, MTC100KT1-1103 DUMMY, MTCX1X100-100)	091254	1
DA18-R	MTC100YH1-004	.SHELL-RECEPTACLE (VK1010) (USED WITH INSERT: MTC100YC1-006)	255276	1
DG	422255-8	.BUNG- (VK1793)		1
DH	422254-9	.BUNG- (VK1793)		1
DW-CG	WC1503	.SWITCH- (VK0653)		1
E-GG	HWBUN1146D10B	.TERMINAL BLOCK- (VK0574)		1
F36-ZK	5920-99-0120075	.FUSE-3AMP (VK0657)		1
F57-ZK	5920-99-0120075	.FUSE-3AMP (VK0657)		1
F58-ZK	5920-99-0120075	.FUSE-3AMP (VK0657)		1
QR	150D01-100-2	.DETECTOR-OVERHEAT (UNIT EXCHANGE ITEM) (VK1536)		1
		MISSING ITEM NO. NOT APPLICABLE		

– ITEM NOT ILLUSTRATED

IDENT	PART NUMBER	1234567 NOMENCLATURE	EFFECT FROM TO	UNITS PER ASSY
QS	150D01-100-2	.DETECTOR-OVERHEAT (UNIT EXCHANGE ITEM) (VK1536)		1
QT	150D01-100-2	.DETECTOR-OVERHEAT (UNIT EXCHANGE ITEM) (VK1536)		1
QU	150D01-100-2	.DETECTOR-OVERHEAT (UNIT EXCHANGE ITEM) (VK1536)		1
QV	150D01-100-2	.DETECTOR-OVERHEAT (UNIT EXCHANGE ITEM) (VK1536)		1
QW	150D01-100-2	.DETECTOR-OVERHEAT (UNIT EXCHANGE ITEM) (VK1536)		1
UM	156D05-315	.TEMPERATURE SWITCH- (VK1536)		1
UP	156D05-315	.TEMPERATURE SWITCH- (VK1536)		1
		MISSING ITEM NO. NOT APPLICABLE		

- ITEM NOT ILLUSTRATED

EXTINGUISHING

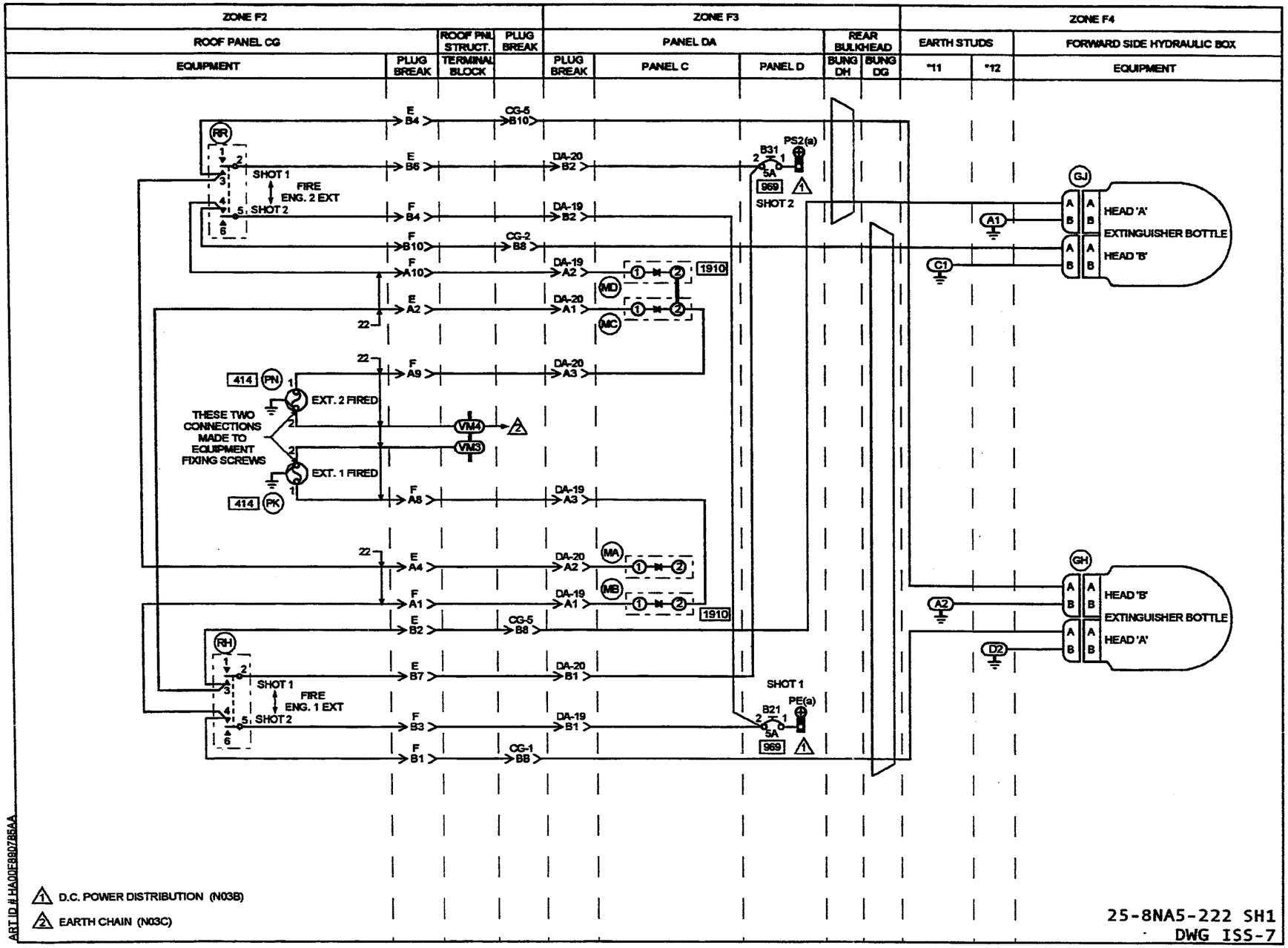
ZONE F2
ZONE F3
ZONE F4
ROOF PANEL CG
ROOF PNL STRUCT.
PLUG BREAK
PANEL DA
REAR BULKHEAD
EARTH STUDS
FORWARD SIDE HYDRAULIC BOX
EQUIPMENT
PLUG BREAK
TERMINAL BLOCK
PLUG BREAK
PANEL C
PANEL D
BUNG DH
BUNG DG
*11
*12
EQUIPMENT
RR
SHOT 1
FIRE ENG. 2 EXT
SHOT 2
E B4
CG-5 B10
E B6
DA-20 B2
F B4
DA-19 B2
F B10
CG-2 B8
F A10
DA-19 A2
E A2
DA-20 A1
22
F A9
DA-20 A3
414 PN
EXT. 2 FIRED
THESE TWO CONNECTIONS MADE TO EQUIPMENT FIXING SCREWS
VM4
VM3
EXT. 1 FIRED
414 PK
F A8
DA-19 A3
E A4
DA-20 A2
F A1
DA-19 A1
1910
E B2
CG-5 B8
RH
E B7
DA-20 B1
SHOT 1
FIRE ENG. 1 EXT
SHOT 2
F B3
DA-19 B1
F B1
CG-1 B8
B31
PS2(a)
5A
969
SHOT 2
B21
PE(a)
SHOT 1
GJ
HEAD 'A'
EXTINGUISHER BOTTLE
HEAD 'B'
A1
C1
GH
HEAD 'B'
EXTINGUISHER BOTTLE
HEAD 'A'
A2
D2
D.C. POWER DISTRIBUTION (N03B)
EARTH CHAIN (N03C)
ART ID # HA00F8807B6AA
25-8NA5-222 SH1
DWG ISS-7

IDENT	PART NUMBER	1234567 NOMENCLATURE	EFFECT FROM TO	UNITS PER ASSY
		FIRE EXTINGUISHERS	091276	
	25-8NA5-222	WIRING DIAGRAM-		RF
		(MOD 253149C)		
		(MOD 25F505A)		
B21-DAD	483TCG11J25-5A	.CIRCUIT BREAKER-5AMP		1
		(VU0091)		
B31-DAD	483TCG11J25-5A	.CIRCUIT BREAKER-5AMP		1
		(VU0091)		
CG1-P	MTC100YH2-009	.SHELL-PLUG	091254	1
		(VK1010)		
		(USED WITH WAFERS:		
		TYPE A, MTC100KT2-1101		
		TYPE B, MTC100KT2-1102)		
CG1-P	MTC100YH2-009	.SHELL-PLUG	255276	1
		(VK1010)		
		(USED WITH INSERTS:		
		PRIMARY MTC100YC1-001		
		SECONDARY MTC100YC1-002)		
CG1-R	MTC100YH2-010	.SHELL-RECEPTACLE	091254	1
		(VK1010)		
		(USED WITH WAFERS:		
		TYPE A, MTC100KT2-1103		
		TYPE B, MTC100KT2-1104)		
CG1-R	MTC100YH2-010	.SHELL-RECEPTACLE	255276	1
		(VK1010)		
		(USED WITH INSERTS:		
		PRIMARY MTC100YC1-003		
		SECONDARY MTC100YC1-004)		
CG2-P	MTC100YH2-009	.SHELL-PLUG	091254	1
		(VK1010)		
		(USED WITH WAFERS:		
		TYPE A, MTC100KT2-1101		
		TYPE B, MTC100KT2-1102)		
CG2-P	MTC100YH2-009	.SHELL-PLUG	255276	1
		(VK1010)		
		(USED WITH INSERTS:		
		PRIMARY MTC100YC1-001		
		SECONDARY MTC100YC1-002)		
CG2-R	MTC100YH2-010	.SHELL-RECEPTACLE	091254	1
		(VK1010)		
		(USED WITH WAFERS:		
		TYPE A, MTC100KT2-1103		
		TYPE B, MTC100KT2-1104)		
CG2-R	MTC100YH2-010	.SHELL-RECEPTACLE	255276	1
		(VK1010)		
		(USED WITH INSERTS:		
		PRIMARY MTC100YC1-003		
		SECONDARY MTC100YC1-004)		
		MISSING ITEM NO. NOT APPLICABLE		

— ITEM NOT ILLUSTRATED

IDENT	PART NUMBER	1234567 NOMENCLATURE	EFFECT FROM TO	UNITS PER ASSY
CG5-P	MTC100YH1-003	.SHELL-PLUG (VK1010) (USED WITH WAFERS: TYPE A, MTC100KT1-1101 TYPE B, MTC100KT2-1102)	091254	1
CG5-P	MTC100YH1-003	.SHELL-PLUG (VK1010) (USED WITH INSERTS: MTC100YC1-005)	255276	1
CG5-R	MTC100YH1-004	.SHELL-RECEPTACLE (VK1010) (USED WITH WAFERS: TYPE A, MTC100KT1-1103 TYPE B, MTC100KT2-1104)	091254	1
CG5-R	MTC100YH1-004	.SHELL-RECEPTACLE (VK1010) (USED WITH INSERTS: MTC100YC1-006)	255276	1
DA19-P	MTC100YH2-009	.SHELL-PLUG (VK1010) (USED WITH WAFERS: TYPE A, MTC100KT2-1101 TYPE B, MTC100KT2-1102)	091254	1
DA19-P	MTC100YH2-009	.SHELL-PLUG (VK1010) (USED WITH INSERTS: PRIMARY MTC100YC1-001 SECONDARY MTC100YC1-002)	255276	1
DA19-R	MTC100YH2-010	.SHELL-RECEPTACLE (VK1010) (USED WITH WAFERS: TYPE A, MTC100KT2-1103 TYPE B, MTC100KT2-1104)	091254	1
DA19-R	MTC100YH2-010	.SHELL-RECEPTACLE (VK1010) (USED WITH INSERTS: PRIMARY MTC100YC1-003 SECONDARY MTC100YC1-004)	255276	1
DA20-P	MTC100YH2-009	.SHELL-PLUG (VK1010) (USED WITH WAFERS: TYPE A, MTC100KT2-1101 TYPE B, MTC100KT2-1102)	091254	1
DA20-P	MTC100YH2-009	.SHELL-PLUG (VK1010) (USED WITH INSERTS: PRIMARY MTC100YC1-001 SECONDARY MTC100YC1-002)	255276	1
		MISSING ITEM NO. NOT APPLICABLE		

– ITEM NOT ILLUSTRATED

IDENT	PART NUMBER	1234567 NOMENCLATURE	EFFECT FROM TO	UNITS PER ASSY
DA20-R	MTC100YH2-010	.SHELL-RECEPTACLE (VK1010) (USED WITH WAFERS: TYPE A, MTC100KT2-1103 TYPE B, MTC100KT2-1104)	091254	1
DA20-R	MTC100YH2-010	.SHELL-RECEPTACLE (VK1010) (USED WITH INSERTS: PRIMARY MTC100YC1-003 SECONDARY MTC100YC1-004)	255276	1
DG	422255-8	.BUNG- (VK1793)		1
DH	422254-9	.BUNG- (VK1793)		1
E-CG-P	MTC100YH1-003	.SHELL-PLUG (VK1010) (USED WITH WAFERS: TYPE A, MTC100KT1-1103 TYPE B, MTC100KT1-1104)	091254	1
E-CG-P	MTC100YH1-003	.SHELL-PLUG (VK1010) (USED WITH INSERT: MTC100YC1-006)	255276	1
E-CG-R	MTC100YH1-004	.SHELL-RECEPTACLE (VK1010) (USED WITH WAFERS: TYPE A, MTC100KT1-1101 TYPE B, MTC100KT1-1102)	091254	1
E-CG-R	MTC100YH1-004	.SHELL-RECEPTACLE (VK1010) (USED WITH INSERT: MTC100YC1-005)	255276	1
F-CG-P	MTC100YH1-003	.SHELL-PLUG (VK1010) (USED WITH WAFERS: TYPE A, MTC100KT1-1103 TYPE B, MTC100KT1-1104)	091254	1
F-CG-P	MTC100YH1-003	.SHELL-PLUG (VK1010) (USED WITH INSERT: MTC100YC1-006)	255276	1
F-CG-R	MTC100YH1-004	.SHELL-RECEPTACLE (VK1010) (USED WITH WAFERS: TYPE A, MTC100KT1-1101 TYPE B, MTC100KT1-1102)	091254	1
F-CG-R	MTC100YH1-004	.SHELL-RECEPTACLE (VK1010) (USED WITH INSERT: MTC100YC1-005)	255276	1
		MISSING ITEM NO. NOT APPLICABLE		

– ITEM NOT ILLUSTRATED

IDENT	PART NUMBER	1234567 NOMENCLATURE	EFFECT FROM TO	UNITS PER ASSY
GH	33200002	.EXTINGUISHER ASSY-FIRE, AUTOMATIC (V05167) (OPT 33200002-3)		1
GH-A-R	PC06E8-2SSR	.CONNECTOR-SOCKET,HEAD A (V88917)		1
GH-B-R	PC06E8-2SSR	.CONNECTOR-SOCKET,HEAD B (V88917)		1
GJ	33200002	.EXTINGUISHER ASSY-FIRE, AUTOMATIC (V05167) (OPT 33200002-3)		1
GJ-A-R	PC06E8-2SSR	.CONNECTOR-SOCKET,HEAD A (V88917)		1
GJ-B-R	PC06E8-2SSR	.CONNECTOR-SOCKET,HEAD B (V88917)		1
MA-DAC	BYW54	.DIODE- (VK0004)		1
MB-DAC	BYW54	.DIODE- (VK0004)		1
MC-DAC	BYW54	.DIODE- (VK0004)		1
MD-DAC	BYW54	.DIODE- (VK0004)		1
PK-CG	A656	.HOLDER-BOTTLE GONE, INDICATOR (VK1536) (USED WITH FUSE: A1003)		1
PN-CG	A656	.HOLDER-BOTTLE GONE, INDICATOR (VK1536) (USED WITH FUSE: A1003)		1
RH-CG	2TP1-7	.SWITCH- (V91929) (OPT (VK6596))	091116	1
RH-CG	2TP1-7M	.SWITCH- (V91929) (OPT (VK6596))	117276	1
RR-CG	2TP1-7	.SWITCH- (V91929) (OPT (VK6596))	091116	1
RR-CG	2TP1-7M	.SWITCH- (V91929) (OPT (VK6596))	117276	1
VM	HWBUN1146S10B	.TERMINAL BLOCK- (VK0574)		1
		MISSING ITEM NO. NOT APPLICABLE		

– ITEM NOT ILLUSTRATED

CHAPTER

27

FLIGHT CONTROLS

CHAPTER 27 - FLIGHT CONTROLS

TABLE OF CONTENTS

SUBJECT	CHAPTER SECTION UNIT	FIGURE	EFFECT
GENERAL	27-00-00		
CONTROL SURFACES OUT OF TRIM	27-00-10	3	092093
			095096
			098110
			112112
			114120
			231231
			234234
CONTROL SURFACES OUT OF TRIM	27-00-10	4	091091
			094094
			097097
			111111
			113113
			121230
			232233
			235276

CHAPTER 27 - FLIGHT CONTROLS

TABLE OF CONTENTS

SUBJECT	CHAPTER SECTION UNIT	FIGURE	EFFECT
RUDDER BIAS	27-24-00		
RUDDER BIAS	27-24-10	2	091120
RUDDER BIAS	27-24-10	3	121276

CHAPTER 27 - FLIGHT CONTROLS

TABLE OF CONTENTS

SUBJECT	CHAPTER SECTION UNIT	FIGURE	EFFECT
ELEVATOR AND TAB	27-30-00		
ELEVATOR ELECTRIC TRIM	27-30-10	7	091098
			100104
			106120
			122160
			162162
			164276
ELEVATOR ELECTRIC TRIM	27-30-10	8	099099
			105105
			121121
			161161
			163163
STALL IDENT/WARNING	27-33-00		
STALL IDENT SYSTEM	27-33-00	5	091110
STALL IDENT SYSTEM	27-33-00	7	111232
			234234
			236236
			238276

CHAPTER 27 - FLIGHT CONTROLS

TABLE OF CONTENTS

SUBJECT	CHAPTER SECTION UNIT	FIGURE	EFFECT
FLAPS	27-50-00		
FLAP POSITION INDICATOR	27-50-10	2	091276

CHAPTER 27 - FLIGHT CONTROLS

TABLE OF CONTENTS

SUBJECT	CHAPTER SECTION UNIT	FIGURE	EFFECT
AIRBRAKE INDICATION/SELECTION	27-61-00		
AIR BRAKE INDICATORS	27-61-10	3	092093
			095096
			098110
			112112
			114120
			231231
			234234
AIR BRAKE INDICATORS	27-61-10	4	091091
			094094
			097097
			111111
			113113
			121179
			181181
			183185
			187196
			198230
			232233
			235257
			259263
			267276
AIR BRAKE INDICATORS	27-61-10	8	258258
			264265
AIRBRAKE SELECTOR LEVER BAULK	27-61-20	4	099099
			105105
			121121
			161161
			163163

CH-SECT-UNIT-FIG	PAGE NO.	DATE
*27	1	AUG 31/03
*27	2	AUG 31/03
*27	3	AUG 31/03
*27	4	AUG 31/03
*27	5	AUG 31/03
27-00-00	1	MAY 31/02
27-00-10- 3	0	MAY 31/02
27-00-10- 3	1	MAY 31/02
27-00-10- 3	2	MAY 31/02
27-00-10- 4	0	NOV 30/02
27-00-10- 4	1	MAY 31/02
*27-00-10- 4	2	AUG 31/03
*27-00-10- 4	3	AUG 31/03
27-24-00	1	MAY 31/02
27-24-10- 2	0	MAY 31/02
27-24-10- 2	1	MAY 31/02
27-24-10- 2	2	MAY 31/02
27-24-10- 2	3	MAY 31/02
27-24-10- 2	4	MAY 31/02
27-24-10- 3	0	MAY 31/02
27-24-10- 3	1	MAY 31/02
27-24-10- 3	2	MAY 31/02
27-24-10- 3	3	MAY 31/02
27-24-10- 3	4	MAY 31/02
27-24-10- 3	5	MAY 31/02
27-30-00	1	MAY 31/02
27-30-10- 7	0	MAY 31/02
27-30-10- 7	1	MAY 31/02
27-30-10- 7	2	MAY 31/02
27-30-10- 8	0	MAY 31/02
27-30-10- 8	1	MAY 31/02
27-30-10- 8	2	MAY 31/02
27-33-00	1	MAY 31/02
27-33-00- 5	0	MAY 31/02
27-33-00- 5	0A	MAY 31/02
27-33-00- 5	0B	MAY 31/02
27-33-00- 5	0C	MAY 31/02
27-33-00- 5	0D	MAY 31/02
27-33-00- 5	0E	MAY 31/02
27-33-00- 5	0F	MAY 31/02
27-33-00- 5	0G	MAY 31/02
27-33-00- 5	0H	MAY 31/02
27-33-00- 5	1	MAY 31/02
27-33-00- 5	2	MAY 31/02
27-33-00- 5	3	MAY 31/02
27-33-00- 5	4	MAY 31/02
27-33-00- 5	5	MAY 31/02
27-33-00- 5	6	MAY 31/02
27-33-00- 5	7	MAY 31/02
27-33-00- 5	8	MAY 31/02
27-33-00- 5	9	MAY 31/02
27-33-00- 5	10	MAY 31/02
27-33-00- 5	11	MAY 31/02
27-33-00- 5	12	MAY 31/02
27-33-00- 7	0	NOV 30/02
27-33-00- 7	0A	NOV 30/02
27-33-00- 7	0B	NOV 30/02
27-33-00- 7	0C	NOV 30/02
27-33-00- 7	0D	NOV 30/02
27-33-00- 7	0E	NOV 30/02
27-33-00- 7	0F	NOV 30/02
27-33-00- 7	0G	NOV 30/02
27-33-00- 7	0H	NOV 30/02
27-33-00- 7	1	NOV 30/02
27-33-00- 7	2	MAY 31/02
27-33-00- 7	3	MAY 31/02
27-33-00- 7	4	MAY 31/02
27-33-00- 7	5	MAY 31/02
27-33-00- 7	6	MAY 31/02
27-33-00- 7	7	MAY 31/02
27-33-00- 7	8	MAY 31/02
27-33-00- 7	9	MAY 31/02
27-33-00- 7	10	MAY 31/02
*27-33-00- 7	11	AUG 31/03
*27-33-00- 7	12	AUG 31/03
*27-33-00- 7	13	AUG 31/03
*27-33-00- 7	14	AUG 31/03
*27-33-00- 7	15	AUG 31/03
*27-33-00- 7	16	AUG 31/03
*27-33-00- 7	17	AUG 31/03
27-50-00	1	MAY 31/02
27-50-10- 2	0	NOV 30/02
27-50-10- 2	1	MAY 31/02
27-61-00	1	MAY 31/02
27-61-10- 3	0	NOV 30/02
27-61-10- 3	1	MAY 31/02
27-61-10- 3	2	MAY 31/02
27-61-10- 4	0	NOV 30/02
27-61-10- 4	1	MAY 31/02
27-61-10- 4	2	MAY 31/02
27-61-10- 4	3	MAY 31/02
27-61-10- 4	4	MAY 31/02
27-61-10- 8	0	MAY 31/02
27-61-10- 8	1	NOV 30/02
27-61-10- 8	2	MAY 31/02
27-61-10- 8	3	MAY 31/02
27-61-20- 4	0	MAY 31/02
27-61-20- 4	1	MAY 31/02
27-61-20- 4	2	MAY 31/02

*THE ASTERISK INDICATES PAGES CHANGED OR ADDED BY THE CURRENT REVISION

GENERAL

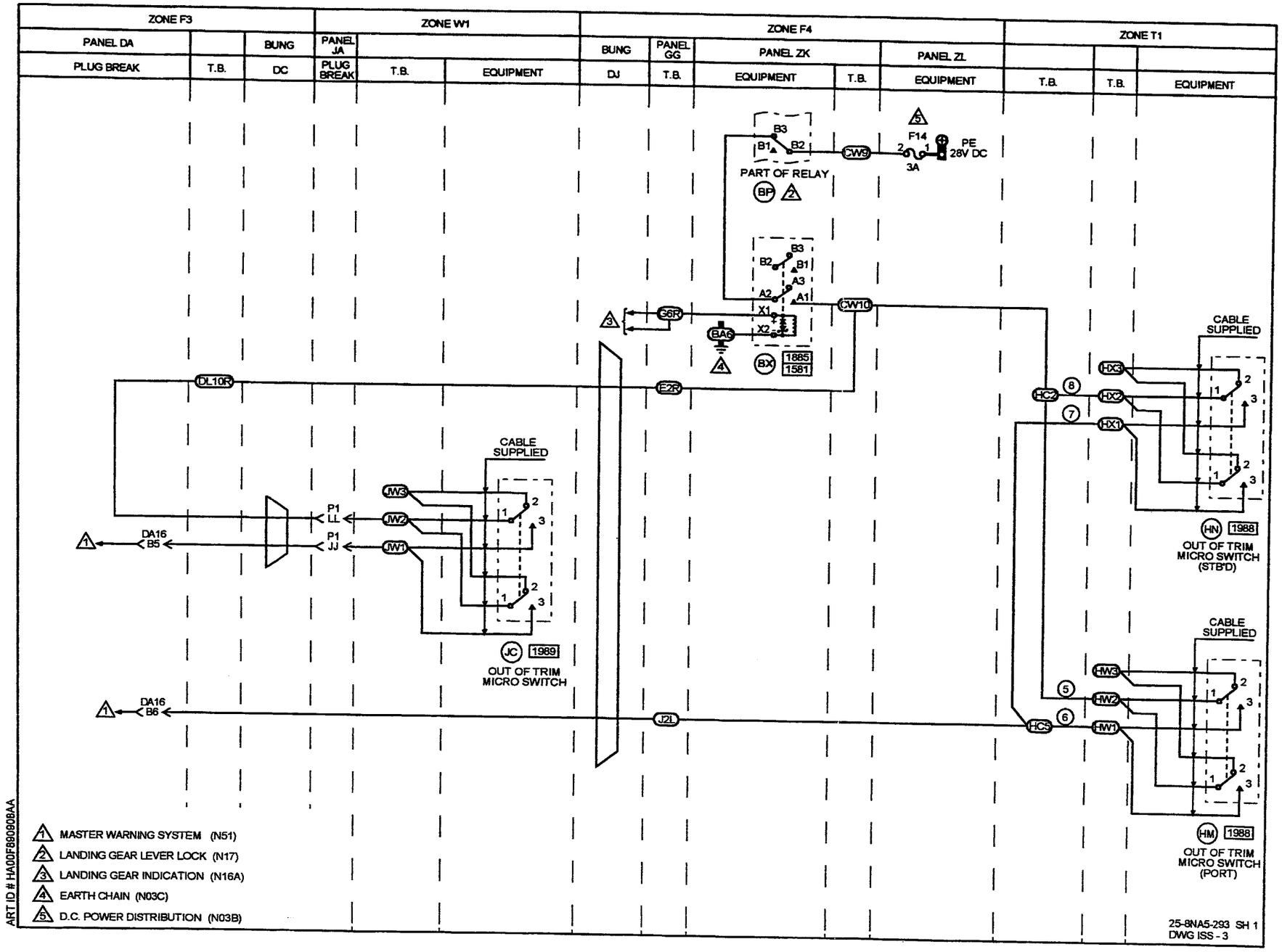
ZONE F3
PANEL DA
PLUG BREAK
T.B.
BUNG
DC
ZONE W1
PANEL JA
PLUG BREAK
T.B.
EQUIPMENT
ZONE F4
BUNG
DJ
PANEL GG
T.B.
PANEL ZK
EQUIPMENT
T.B.
PANEL ZL
EQUIPMENT
ZONE T1
T.B.
T.B.
EQUIPMENT
B3
B1
B2
CW9
F14
2
1
3A
PE
28V DC
PART OF RELAY
BP
B3
B2
B1
A3
A2
A1
X1
X2
CW10
S6R
BA6
BX
1885
1581
DL10R
E2R
CABLE SUPPLIED
JW3
JW2
JW1
P1
LL
P1
JJ
DA16
B5
JC
1989
OUT OF TRIM
MICRO SWITCH
DA16
B6
J2L
HC2
HC3
HX3
HX2
HX1
HW3
HW2
HW1
HN
1988
OUT OF TRIM
MICRO SWITCH
(STB'D)
HM
1988
OUT OF TRIM
MICRO SWITCH
(PORT)
MASTER WARNING SYSTEM (N51)
LANDING GEAR LEVER LOCK (N17)
LANDING GEAR INDICATION (N16A)
EARTH CHAIN (N03C)
D.C. POWER DISTRIBUTION (N03B)
ART ID # HA00F890808AA
25-8NA5-293 SH 1
DWG ISS - 3

IDENT	PART NUMBER	1234567 NOMENCLATURE	EFFECT FROM TO	UNITS PER ASSY
		CONTROL SURFACES OUT OF TRIM	092093 095096 098110 112112 114120 231231 234234	
	25-8NA5-293	WIRING DIAGRAM- (MOD 253149C)		RF
BP-ZK	M300-1264	.RELAY- (VK6265) (USED WITH SOCKET: M12883-41-16 (V81349))		1
BX-ZK	M300-1264	.RELAY- (VK6265) (USED WITH SOCKET: M12883-41-16 (V81349))		1
CW-ZK	HWBUN1146S10B	.TERMINAL BLOCK- (VK0574)		1
DA16-P	MTC100YH1-003	.SHELL-PLUG (VK1010) (USED WITH WAFERS: TYPE A,MTC100KT2-1101 TYPE B,MTC100KT2-1102)		1
DA16-R	MTC100YH1-004	.SHELL-RECEPTACLE (VK1010) (USED WITH WAFERS: TYPE A,MTC100KT1-1103 TYPE B,MTC100KT1-1104)		1
DC	422254-8	.BUNG- (VK1793)		1
DJ	422255-7	.BUNG- (VK1793)		1
DL	HWBUN1146D10B	.TERMINAL BLOCK- (VK0574)		1
E-GG	HWBUN1146D10B	.TERMINAL BLOCK- (VK0574)		1
F14-ZL	5920-99-0120075	.FUSE-3AMP (VK0657)		1
G-GG	HWBUN1146D10B	.TERMINAL BLOCK- (VK0574)		1
HC	HWBUN1146S5B	.TERMINAL BLOCK- (VK0574)		1
HM	21EN108-6	.MICRO SWITCH- (V91929) (OPT (VK6596))		1
		MISSING ITEM NO. NOT APPLICABLE		

– ITEM NOT ILLUSTRATED

IDENT	PART NUMBER	1234567 NOMENCLATURE	EFFECT FROM TO	UNITS PER ASSY
HN	21EN108-6	.MICRO SWITCH- (V91929) (OPT (VK6596))		1
HW	HWBUN1146S3B	.TERMINAL BLOCK- (VK0574)		1
HX	HWBUN1146S3B	.TERMINAL BLOCK- (VK0574)		1
J-GG	HWBUN1146D10B	.TERMINAL BLOCK- (VK0574)		1
JC	602EN1-6	.MICRO SWITCH- (V91929) (OPT (VK6596))		1
JW	HWBUN1146S3B	.TERMINAL BLOCK- (VK0574)		1
P1-JA-P	BAEREF000004328	.CONNECTOR-SOCKET (6027-24-61SWCONDD (VK1793))		1
P1-JA-R	BAEREF000003898	.CONNECTOR-PIN (6026-24-61PWCONDD (VK1793))		1
		MISSING ITEM NO. NOT APPLICABLE		

– ITEM NOT ILLUSTRATED

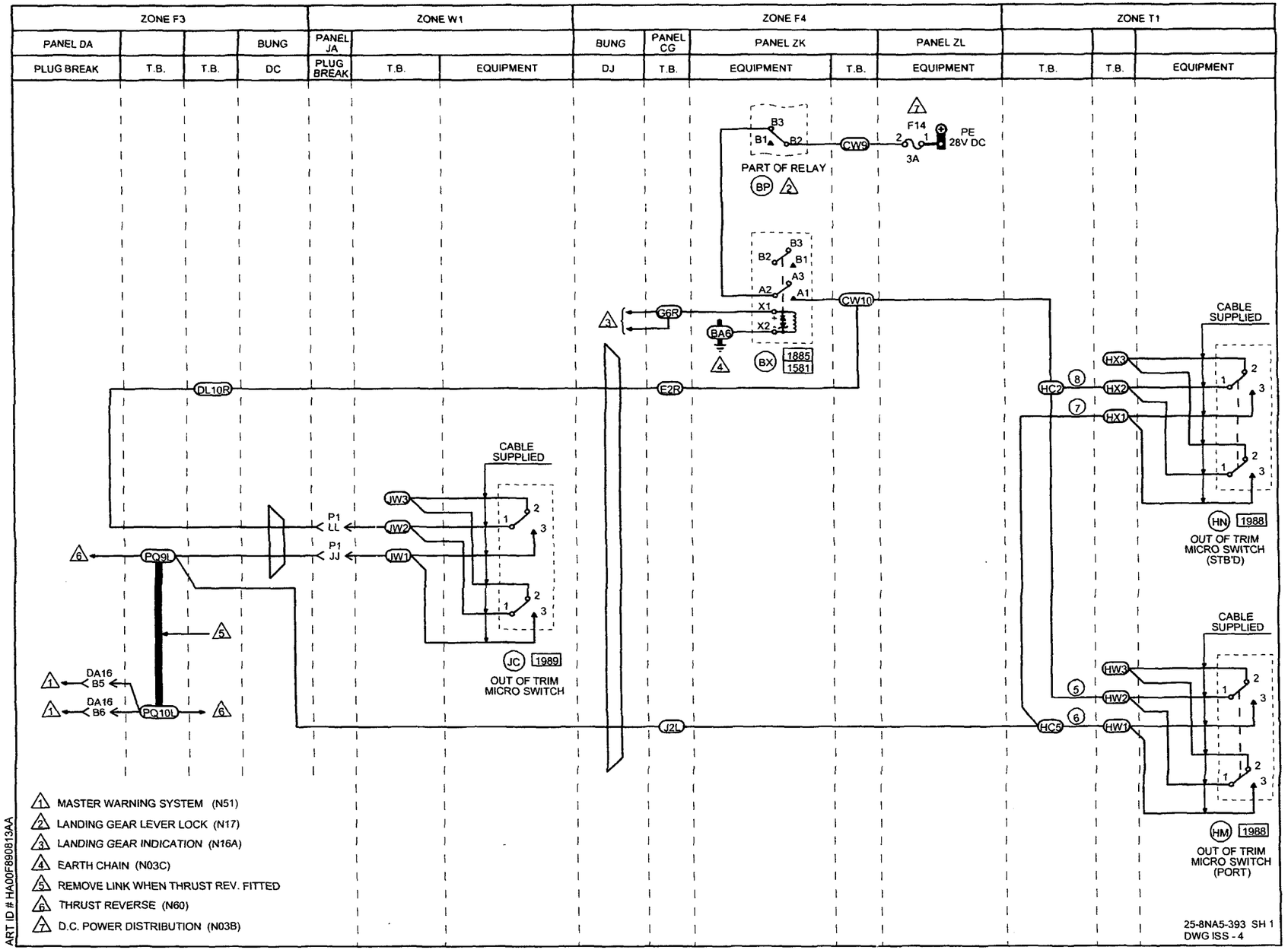
ZONE F3
ZONE W1
ZONE F4
ZONE T1
PANEL DA
BUNG
PANEL JA
BUNG
PANEL CG
PANEL ZK
PANEL ZL
PLUG BREAK
T.B.
T.B.
DC
PLUG BREAK
T.B.
EQUIPMENT
DJ
T.B.
EQUIPMENT
T.B.
EQUIPMENT
T.B.
T.B.
EQUIPMENT
B3
B1
B2
CW9
F14
3A
PE
28V DC
PART OF RELAY
BP
B3
B2
B1
A3
A2
A1
X1
X2
CW10
G6R
BA6
BX
1885
1581
DL10R
E2R
CABLE SUPPLIED
HX3
HX2
HX1
HC2
HN
1988
OUT OF TRIM MICRO SWITCH (STB'D)
CABLE SUPPLIED
JW3
JW2
JW1
P1 LL
P1 JJ
PQ9L
JC
1989
OUT OF TRIM MICRO SWITCH
DA16 B5
DA16 B6
PQ10L
J2L
HC5
HW3
HW2
HW1
HM
1988
OUT OF TRIM MICRO SWITCH (PORT)
1 MASTER WARNING SYSTEM (N51)
2 LANDING GEAR LEVER LOCK (N17)
3 LANDING GEAR INDICATION (N16A)
4 EARTH CHAIN (N03C)
5 REMOVE LINK WHEN THRUST REV. FITTED
6 THRUST REVERSE (N60)
7 D.C. POWER DISTRIBUTION (N03B)
ART ID # HA00F890813AA
25-8NA5-393 SH 1
DWG ISS - 4

IDENT	PART NUMBER	1234567 NOMENCLATURE	EFFECT FROM TO	UNITS PER ASSY
		CONTROL SURFACES OUT OF TRIM	091091 094094 097097 111111 113113 121230 232233 235276	
	25-8NA5-393	WIRING DIAGRAM- (MOD 259283A) (MOD 25F505A)		RF
BP-ZK	M300-1264	.RELAY- (VK6265) (USED WITH SOCKET: M12883-41-16 (V81349))		1
BX-ZK	M300-1264	.RELAY- (VK6265) (USED WITH SOCKET: M12883-41-16 (V81349))		1
CW-ZK	HWBUN1146S10B	.TERMINAL BLOCK- (VK0574)		1
DA16-P	MTC100YH1-003	.SHELL-PLUG (VK1010) (USED WITH WAFERS: TYPE A,MTC100KT2-1101 TYPE B,MTC100KT2-1102)	091091 094094 097097 111111 113113 121230 232233 235254	1
DA16-P	MTC100YH1-003	.SHELL-PLUG (VK1010) (USED WITH INSERT: MTC100YC1-005)	255276	1
DA16-R	MTC100YH1-004	.SHELL-RECEPTACLE (VK1010) (USED WITH WAFERS: TYPE A,MTC100KT1-1103 TYPE B,MTC100KT1-1104)	091091 094094 097097 111111 113113 121230 232233 235254	1
DA16-R	MTC100YH1-004	.SHELL-RECEPTACLE (VK1010) (USED WITH INSERT: MTC100YC1-006)	255276	1
DC	422254-8	.BUNG- (VK1793)		1
		MISSING ITEM NO. NOT APPLICABLE		

– ITEM NOT ILLUSTRATED

	IDENT	PART NUMBER	1234567 NOMENCLATURE	EFFECT FROM TO	UNITS PER ASSY
	DJ	422255-7	.BUNG- (VK1793)		1
	DL	HWBUN1146D10B	.TERMINAL BLOCK- (VK0574)		1
	E-GG	HWBUN1146D10B	.TERMINAL BLOCK- (VK0574)		1
	F14-ZL	5920-99-0120075	.FUSE-3AMP (VK0657)		1
	G-GG	HWBUN1146D10B	.TERMINAL BLOCK- (VK0574)		1
	HC	HWBUN1146S5B	.TERMINAL BLOCK- (VK0574)		1
R	HM	21EN108-6	.MICRO SWITCH-	091091	1
R			(V91929)	094094	
R			(OPT (VK6596))	097097	
R			(PRE MOD 25G055A)	111111	
R			(FOR SPARES PROCURE	113113	
R			IN LIEU OF	121230	
R			9002EN16)	232233	
R				235276	
R	HM	9002EN16	.MICRO SWITCH-	091091	1
R			(V91929)	094094	
R			(OPT (VK6596))	097097	
R			(PRE MOD 25G055A)	111111	
R			(FOR SPARES PROCURE	113113	
R			21EN108-6)	121230	
R				232233	
R				235276	
R	HN	21EN108-6	.MICRO SWITCH-	091091	1
R			(V91929)	094094	
R			(OPT (VK6596))	097097	
R			(PRE MOD 25G055A)	111111	
R			(FOR SPARES PROCURE	113113	
R			IN LIEU OF	121230	
R			9002EN16)	232233	
R				235276	
R	HN	9002EN16	.MICRO SWITCH-	091091	1
R			(V91929)	094094	
R			(OPT (VK6596))	097097	
R			(PRE MOD 25G055A)	111111	
R			(FOR SPARES PROCURE	113113	
R			21EN108-6)	121230	
R				232233	
R				235276	
	HW	HWBUN1146S3B	.TERMINAL BLOCK- (VK0574)		1
	HX	HWBUN1146S3B	.TERMINAL BLOCK- (VK0574)		1
	J-GG	HWBUN1146D10B	.TERMINAL BLOCK- (VK0574)		1
			MISSING ITEM NO. NOT APPLICABLE		

– ITEM NOT ILLUSTRATED

IDENT	PART NUMBER	1234567 NOMENCLATURE	EFFECT FROM TO	UNITS PER ASSY
JC	602EN1-6	.MICRO SWITCH- (V91929) (OPT (VK6596))		1
JW	HWBUN1146S3B	.TERMINAL BLOCK- (VK0574)		1
PQ	HWBUN1146D10B	.TERMINAL BLOCK- (VK0574)		1
P1-JA-P	BAEREF000003898	.CONNECTOR-PIN (6026-24-61PWCONDD (VK1793))		1
P1-JA-R	BAEREF000004313	.CONNECTOR-SOCKET (6027-24-61SWCONDD (VK1793))		1
		MISSING ITEM NO. NOT APPLICABLE		

– ITEM NOT ILLUSTRATED

RUDDER BIAS

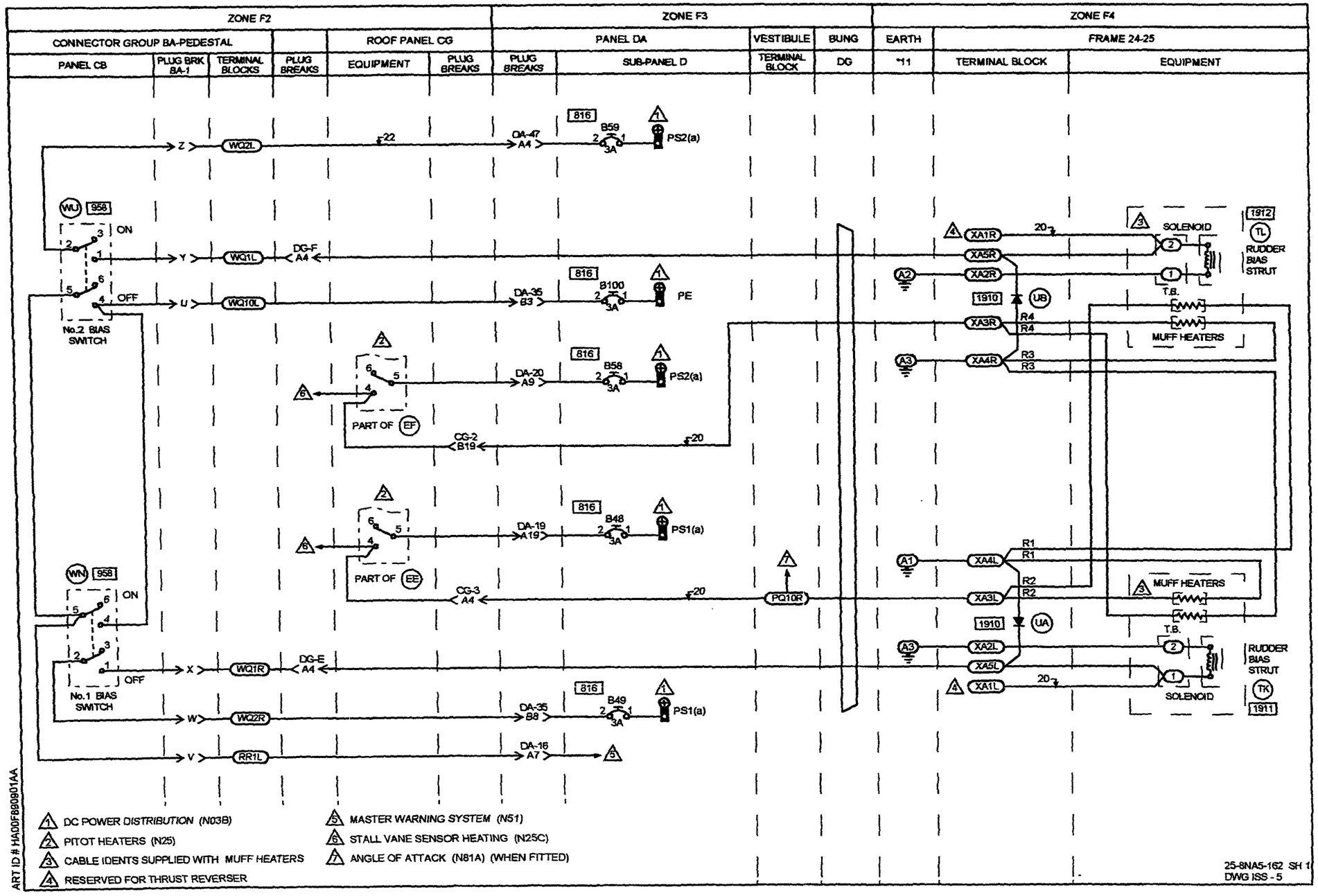
ZONE F2
ZONE F3
ZONE F4
CONNECTOR GROUP BA-PEDESTAL
ROOF PANEL CG
PANEL DA
VESTIBULE
BUNG
EARTH
FRAME 24-25
PANEL CB
PLUG BRK BA-1
TERMINAL BLOCKS
PLUG BREAKS
EQUIPMENT
PLUG BREAKS
PLUG BREAKS
SUB-PANEL D
TERMINAL BLOCK
DG
*11
TERMINAL BLOCK
EQUIPMENT
WQ2L
WQ1L
WQ10L
WQ1R
WQ2R
RR1L
DA-47 A4
DA-35 B3
DA-20 A9
DA-19 A19
DA-35 B8
DA-16 A7
DG-F A4
DG-E A4
CG-2 B19
CG-3 A4
B59
B100
B58
B48
B49
PS2(a)
PE
PS1(a)
PART OF EF
PART OF EE
PQ10R
No.2 BIAS SWITCH
No.1 BIAS SWITCH
ON
OFF
SOLENOID
RUDDER BIAS STRUT
MUFF HEATERS
T.B.
XA1R
XA5R
XA2R
XA3R
XA4R
XA4L
XA3L
XA2L
XA5L
XA1L
1910
1912
1911
1. DC POWER DISTRIBUTION (N03B)
2. PITOT HEATERS (N25)
3. CABLE IDENTS SUPPLIED WITH MUFF HEATERS
4. RESERVED FOR THRUST REVERSER
5. MASTER WARNING SYSTEM (N51)
6. STALL VANE SENSOR HEATING (N25C)
7. ANGLE OF ATTACK (N81A) (WHEN FITTED)
ART ID # HA00F8809001AA
25-8NA5-162 SH 1
DWG ISS - 5

IDENT	PART NUMBER	1234567 NOMENCLATURE	EFFECT FROM TO	UNITS PER ASSY
		RUDDER BIAS	091120	
	25-8NA5-162	WIRING DIAGRAM- (MOD 253149C)		RF
BA1-P	BAEREF000003205	.CONNECTOR-SOCKET (6027-18-32SNCONDB) (VK1793)		1
BA1-R	BAEREF000003662	.CONNECTOR-PIN (6026-18-32PNCONDB) (VK1793) (USED WITH OUTLET: GTR71-18NACS1 (VU0419))		1
B100-DAD	483TCG11J25-3A	.CIRCUIT BREAKER-3A (VU0091)		1
B48-DAD	483TCG11J25-3A	.CIRCUIT BREAKER-3A (VU0091)		1
B49-DAD	483TCG11J25-3A	.CIRCUIT BREAKER-3A (VU0091)		1
B58-DAD	483TCG11J25-3A	.CIRCUIT BREAKER-3A (VU0091)		1
B59-DAD	483TCG11J25-3A	.CIRCUIT BREAKER-3A (VU0091)		1
CG2-P	MTC100YH2-009	.SHELL-PLUG (VK1010) (USED WITH WAFERS: TYPE A, MTC100KT2-1101 TYPE B, MTC100KT2-1102)		1
CG2-R	MTC100YH2-010	.SHELL-RECEPTACLE (VK1010) (USED WITH WAFERS: TYPE A, MTC100KT2-1103 TYPE B, MTC100KT2-1104)		1
CG3-P	MTC100YH1-003	.SHELL-PLUG (VK1010) (USED WITH WAFERS: TYPE A, MTC100KT1-1101 DUMMY, MTCX1X100-100)		1
CG3-R	MTC100YH1-004	.SHELL-RECEPTACLE (VK1010) (USED WITH WAFERS: TYPE A, MTC100KT1-1103 DUMMY, MTCX1X100-100)		1
DA16-P	MTC100YH1-003	.SHELL-PLUG (VK1010) (USED WITH WAFERS: TYPE A, MTC100KT1-1101 TYPE B, MTC100KT1-1102)		1
		MISSING ITEM NO. NOT APPLICABLE		

– ITEM NOT ILLUSTRATED

IDENT	PART NUMBER	1234567 NOMENCLATURE	EFFECT FROM TO	UNITS PER ASSY
DA16-R	MTC100YH1-004	.SHELL-RECEPTACLE (VK1010) (USED WITH WAFERS: TYPE A, MTC100KT1-1103 TYPE B, MTC100KT1-1104)		1
DA19-P	MTC100YH2-009	.SHELL-PLUG (VK1010) (USED WITH WAFERS: TYPE A, MTC100KT2-1101 TYPE B, MTC100KT2-1102)		1
DA19-R	MTC100YH2-010	.SHELL-RECEPTACLE (VK1010) (USED WITH WAFERS: TYPE A, MTC100KT2-1103 TYPE B, MTC100KT2-1104)		1
DA20-P	MTC100YH2-009	.SHELL-PLUG (VK1010) (USED WITH WAFERS: TYPE A, MTC100KT2-1101 TYPE B, MTC100KT2-1102)		1
DA20-R	MTC100YH2-010	.SHELL-RECEPTACLE (VK1010) (USED WITH WAFERS: TYPE A, MTC100KT2-1103 TYPE B, MTC100KT2-1104)		1
DA35-P	MTC100YH2-009	.SHELL-PLUG (VK1010) (USED WITH WAFERS: TYPE A, MTC100KT2-1101 TYPE B, MTC100KT2-1102)		1
DA35-R	MTC100YH2-010	.SHELL-RECEPTACLE (VK1010) (USED WITH WAFERS: TYPE A, MTC100KT2-1103 TYPE B, MTC100KT2-1104)		1
DA47-P	MTC100YH1-003	.SHELL-PLUG (VK1010) (USED WITH WAFERS: TYPE A, MTC100KT1-1101 TYPE B, MTC100KT1-1102)		1
DA47-R	MTC100YH1-004	.SHELL-RECEPTACLE (VK1010) (USED WITH WAFERS: TYPE A, MTC100KT1-1103 TYPE B, MTC100KT1-1104)		1
DG	422255-8	.BUNG- (VK1793)		1
		MISSING ITEM NO. NOT APPLICABLE		

– ITEM NOT ILLUSTRATED

IDENT	PART NUMBER	1234567 NOMENCLATURE	EFFECT FROM TO	UNITS PER ASSY
DGE-P	MTC100YH2-009	.SHELL-PLUG (VK1010) (USED WITH WAFERS: TYPE A, MTC100KT2-1103 TYPE B, MTC100KT2-1104)		1
DGE-R	MTC100YH2-010	.SHELL-RECEPTACLE (VK1010) (USED WITH WAFERS: TYPE A, MTC100KT2-1101 TYPE B, MTC100KT2-1102)		1
DGF-P	MTC100YH2-009	.SHELL-PLUG (VK1010) (USED WITH WAFERS: TYPE A, MTC100KT2-1103 TYPE B, MTC100KT2-1104)		1
DGF-R	MTC100YH2-010	.SHELL-RECEPTACLE (VK1010) (USED WITH WAFERS: TYPE A, MTC100KT2-1101 TYPE B, MTC100KT2-1102)		1
EE-CG	2TP1-3	.SWITCH- (V91929) (OPT (VK6596)) (PRE MOD 253210A)	091116	1
EE-CG	2TP1-3M	.SWITCH- (V91929) (OPT (VK6596)) (MOD 253210A)		1
EF-CG	2TP1-3	.SWITCH- (V91929) (OPT (VK6596)) (PRE MOD 253210A)	091116	1
EF-CG	2TP1-3M	.SWITCH- (V91929) (OPT (VK6596)) (MOD 253210A)		1
PQ	HWBUN1146D10B	.TERMINAL BLOCK- (VK0574)		1
RR-BA	HWBUN1146D10B	.TERMINAL BLOCK- (VK0574)		1
TK	ACA1218	.RUDDER BIAS STRUT- (VK1037) (USED WITH HEATER: XC5732 (VK2692))		1
TL	ACA1218	.RUDDER BIAS STRUT- (VK1037) (USED WITH HEATER: XC5732 (VK2692))		1
		MISSING ITEM NO. NOT APPLICABLE		

– ITEM NOT ILLUSTRATED

IDENT	PART NUMBER	1234567 NOMENCLATURE	EFFECT FROM TO	UNITS PER ASSY
UA	25-7NF1815-5A	.DIODE ASSY		1
UB	25-7NF1815-5A	.DIODE ASSY		1
WN-CB-BA	2TL1-3	.SWITCH- (V91929) (OPT (VK6596))		1
WQ-BA	HWBUN1736D10B	.TERMINAL BLOCK- (VK0574)		1
WU-CB-BA	2TL1-3	.SWITCH- (V91929) (OPT (VK6596))		1
XA	HWBUN1146D5B	.TERMINAL BLOCK- (VK0574)		1
		MISSING ITEM NO. NOT APPLICABLE		

– ITEM NOT ILLUSTRATED

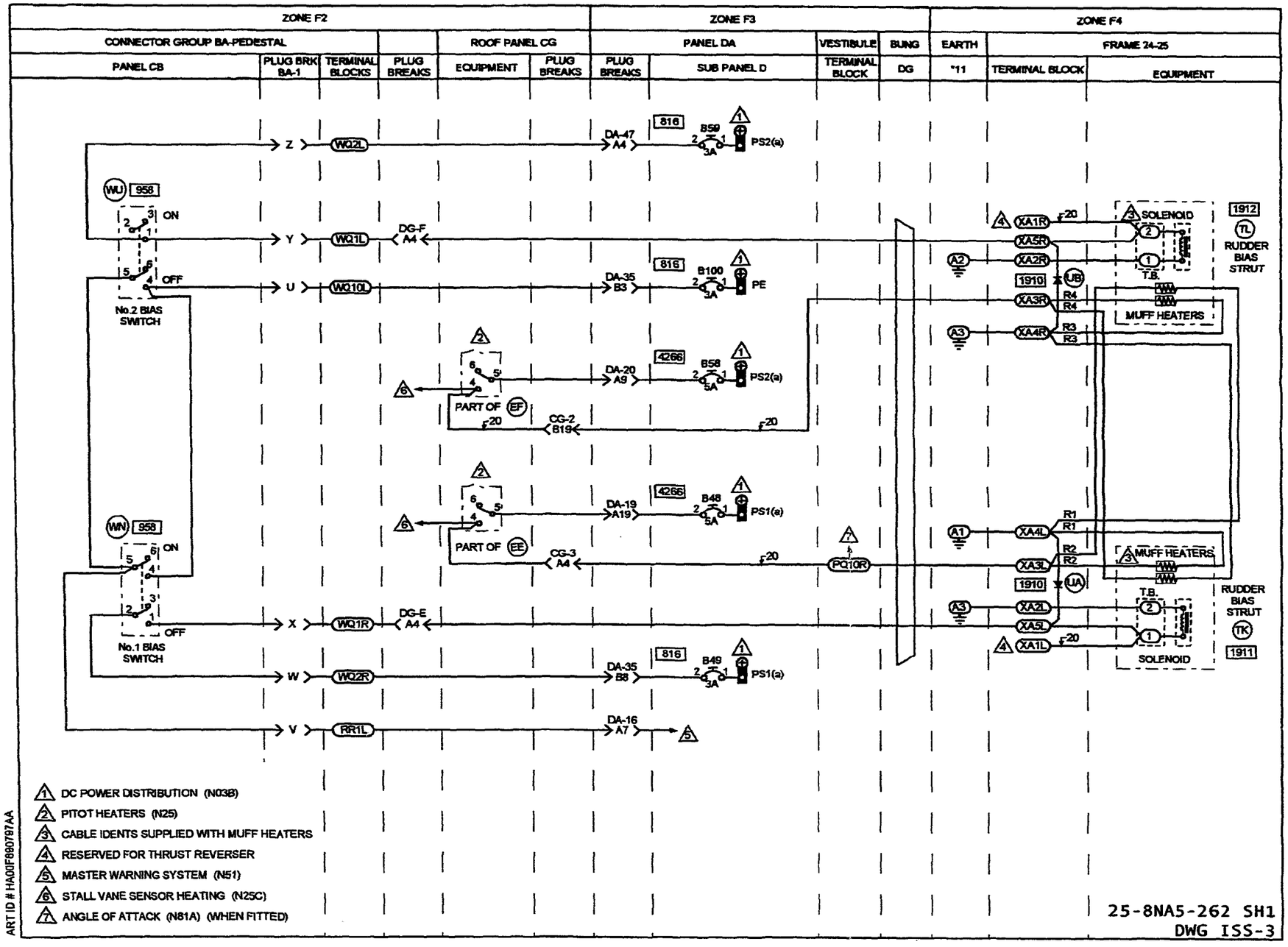

ART ID # HA00F980797AA

IDENT	PART NUMBER	1234567 NOMENCLATURE	EFFECT FROM TO	UNITS PER ASSY
		RUDDER BIAS	121276	
	25-8NA5-262	WIRING DIAGRAM-		RF
		(MOD 253215B)		
		(MOD 25F505A)		
BA1-P	BAEREF000003662	.CONNECTOR-PIN		1
		(6026-18-32PNCONDB		
		(VK1793))		
		(USED WITH OUTLET:		
		GTR71-18NACS1		
		(VU0419))		
BA1-R	BAEREF000003205	.CONNECTOR-SOCKET		1
		(6027-18-32SNCONDB		
		(VK1793))		
B100-DAD	483TCG11J25-3A	.CIRCUIT BREAKER-3AMP		1
		(VU0091)		
B48-DAD	483TCG11J25-5A	.CIRCUIT BREAKER-5AMP		1
		(VU0091)		
B49-DAD	483TCG11J25-3A	.CIRCUIT BREAKER-3AMP		1
		(VU0091)		
B58-DAD	483TCG11J25-5A	.CIRCUIT BREAKER-5AMP		1
		(VU0091)		
B59-DAD	483TCG11J25-3A	.CIRCUIT BREAKER-3AMP		1
		(VU0091)		
CG2-P	MTC100YH2-009	.SHELL-PLUG	121254	1
		(VK1010)		
		(USED WITH WAFERS:		
		TYPE A, MTC100KT2-1101		
		TYPE B, MTC100KT2-1102)		
CG2-P	MTC100YH2-009	.SHELL-PLUG	255276	1
		(VK1010)		
		(USED WITH INSERTS:		
		PRIMARY MTC100YC1-001		
		SECONDARY MTC100YC1-002)		
CG2-R	MTC100YH2-010	.SHELL-RECEPTACLE	121254	1
		(VK1010)		
		(USED WITH WAFERS:		
		TYPE A, MTC100KT2-1103		
		TYPE B, MTC100KT2-1104)		
CG2-R	MTC100YH2-010	.SHELL-RECEPTACLE	255276	1
		(VK1010)		
		(USED WITH INSERTS:		
		PRIMARY MTC100YC1-003		
		SECONDARY MTC100YC1-004)		
CG3-P	MTC100YH1-003	.SHELL-PLUG	121254	1
		(VK1010)		
		(USED WITH WAFERS:		
		TYPE A, MTC100KT1-1101		
		DUMMY, MTCX1X100-100)		
		MISSING ITEM NO. NOT APPLICABLE		

– ITEM NOT ILLUSTRATED

IDENT	PART NUMBER	1234567 NOMENCLATURE	EFFECT FROM TO	UNITS PER ASSY
CG3-P	MTC100YH1-003	.SHELL-PLUG (VK1010) (USED WITH INSERT: MTC100YC1-005)	255276	1
CG3-R	MTC100YH1-004	.SHELL-RECEPTACLE (VK1010) (USED WITH WAFERS: TYPE A, MTC100KT1-1103 DUMMY, MTCX1X100-100)	121254	1
CG3-R	MTC100YH1-004	.SHELL-RECEPTACLE (VK1010) (USED WITH INSERT: MTC100YC1-006)	255276	1
DA16-P	MTC100YH1-003	.SHELL-PLUG (VK1010) (USED WITH WAFERS: TYPE A, MTC100KT1-1101 TYPE B, MTC100KT1-1102)	121254	1
DA16-P	MTC100YH1-003	.SHELL-PLUG (VK1010) (USED WITH INSERT: MTC100YC1-005)	255276	1
DA16-R	MTC100YH1-004	.SHELL-RECEPTACLE (VK1010) (USED WITH WAFERS: TYPE A, MTC100KT1-1103 TYPE B, MTC100KT1-1104)	121254	1
DA16-R	MTC100YH1-004	.SHELL-RECEPTACLE (VK1010) (USED WITH INSERT: MTC100YC1-006)	255276	1
DA19-P	MTC100YH2-009	.SHELL-PLUG (VK1010) (USED WITH WAFERS: TYPE A, MTC100KT2-1101 TYPE B, MTC100KT2-1102)	121254	1
DA19-P	MTC100YH2-009	.SHELL-PLUG (VK1010) (USED WITH INSERTS: PRIMARY MTC100YC1-001 SECONDARY MTC100YC1-002)	255276	1
DA19-R	MTC100YH2-010	.SHELL-RECEPTACLE (VK1010) (USED WITH WAFERS: TYPE A, MTC100KT2-1103 TYPE B, MTC100KT2-1104)	121254	1
		MISSING ITEM NO. NOT APPLICABLE		

– ITEM NOT ILLUSTRATED

IDENT	PART NUMBER	1234567 NOMENCLATURE	EFFECT FROM TO	UNITS PER ASSY
DA19-R	MTC100YH2-010	.SHELL-RECEPTACLE (VK1010) (USED WITH INSERTS: PRIMARY MTC100YC1-003 SECONDARY MTC100YC1-004)	255276	1
DA20-P	MTC100YH2-009	.SHELL-PLUG (VK1010) (USED WITH WAFERS: TYPE A, MTC100KT2-1101 TYPE B, MTC100KT2-1102)	121254	1
DA20-P	MTC100YH2-009	.SHELL-PLUG (VK1010) (USED WITH INSERTS: PRIMARY MTC100YC1-001 SECONDARY MTC100YC1-002)	255276	1
DA20-R	MTC100YH2-010	.SHELL-RECEPTACLE (VK1010) (USED WITH WAFERS: TYPE A, MTC100KT2-1103 TYPE B, MTC100KT2-1104)	121254	1
DA20-R	MTC100YH2-010	.SHELL-RECEPTACLE (VK1010) (USED WITH INSERTS: PRIMARY MTC100YC1-003 SECONDARY MTC100YC1-004)	255276	1
DA35-P	MTC100YH2-009	.SHELL-PLUG (VK1010) (USED WITH WAFERS: TYPE A, MTC100KT2-1101 TYPE B, MTC100KT2-1102)	121254	1
DA35-P	MTC100YH2-009	.SHELL-PLUG (VK1010) (USED WITH INSERTS: PRIMARY MTC100YC1-001 SECONDARY MTC100YC1-002)	255276	1
DA35-R	MTC100YH2-010	.SHELL-RECEPTACLE (VK1010) (USED WITH WAFERS: TYPE A, MTC100KT2-1103 TYPE B, MTC100KT2-1104)	121254	1
DA35-R	MTC100YH2-010	.SHELL-RECEPTACLE (VK1010) (USED WITH INSERTS: PRIMARY MTC100YC1-003 SECONDARY MTC100YC1-004)	255276	1
DA47-P	MTC100YH1-003	.SHELL-PLUG (VK1010) (USED WITH WAFERS: TYPE A, MTC100KT1-1101 TYPE B, MTC100KT1-1102)	121254	1
		MISSING ITEM NO. NOT APPLICABLE		

– ITEM NOT ILLUSTRATED

IDENT	PART NUMBER	1234567 NOMENCLATURE	EFFECT FROM TO	UNITS PER ASSY
DA47-P	MTC100YH1-003	.SHELL-PLUG (VK1010) (USED WITH INSERT: MTC100YC1-005)	255276	1
DA47-R	MTC100YH1-004	.SHELL-RECEPTACLE (VK1010) (USED WITH WAFERS: TYPE A, MTC100KT1-1103 TYPE B, MTC100KT1-1104)	121254	1
DA47-R	MTC100YH1-004	.SHELL-RECEPTACLE (VK1010) (USED WITH INSERT: MTC100YC1-006)	255276	1
DG	422255-8	.BUNG- (VK1793)		1
DGE-P	MTC100YH2-009	.SHELL-PLUG (VK1010) (USED WITH WAFERS: TYPE A, MTC100KT2-1103 TYPE B, MTC100KT2-1104)	121254	1
DGE-P	MTC100YH2-009	.SHELL-PLUG (VK1010) (USED WITH INSERTS: PRIMARY MTC100YC1-003 SECONDARY MTC100YC1-004)	255276	1
DGE-R	MTC100YH2-010	.SHELL-RECEPTACLE (VK1010) (USED WITH WAFERS: TYPE A, MTC100KT2-1101 TYPE B, MTC100KT2-1102)	121254	1
DGE-R	MTC100YH2-010	.SHELL-RECEPTACLE (VK1010) (USED WITH INSERTS: PRIMARY MTC100YC1-001 SECONDARY MTC100YC1-002)	255276	1
DGF-P	MTC100YH2-009	.SHELL-PLUG (VK1010) (USED WITH WAFERS: TYPE A, MTC100KT2-1103 TYPE B, MTC100KT2-1104)	121254	1
DGF-P	MTC100YH2-009	.SHELL-PLUG (VK1010) (USED WITH INSERTS: PRIMARY MTC100YC1-003 SECONDARY MTC100YC1-004)	255276	1
DGF-R	MTC100YH2-010	.SHELL-RECEPTACLE (VK1010) (USED WITH WAFERS: TYPE A, MTC100KT2-1101 TYPE B, MTC100KT2-1102)	121254	1
		MISSING ITEM NO. NOT APPLICABLE		

– ITEM NOT ILLUSTRATED

IDENT	PART NUMBER	1234567 NOMENCLATURE	EFFECT FROM TO	UNITS PER ASSY
DGF-R	MTC100YH2-010	.SHELL-RECEPTACLE (VK1010) (USED WITH INSERTS: PRIMARY MTC100YC1-001 SECONDARY MTC100YC1-002)	255276	1
EE-CG	2TP1-3M	.SWITCH- (V91929) (OPT (VK6596))		1
EF-CG	2TP1-3M	.SWITCH- (V91929) (OPT (VK6596))		1
PQ	HWBUN1146D10B	.TERMINAL BLOCK- (VK0574)		1
RR-BA	HWBUN1146D10B	.TERMINAL BLOCK- (VK0574)		1
TK	ACA1218	.RUDDER BIAS STRUT- (VK1037) (USED WITH HEATER: XC5732 (VK2692))		1
TL	ACA1218	.RUDDER BIAS STRUT- (VK1037) (USED WITH HEATER: XC5732 (VK2692))		1
UA	25-7NF1815-5A	.DIODE ASSY		1
UB	25-7NF1815-5A	.DIODE ASSY		1
WN-CB	2TL1-3	.SWITCH- (V91929) (OPT (VK6596))		1
WQ-BA	HWBUN1736D10B	.TERMINAL BLOCK- (VK0574)		1
WU-CB	2TL1-3	.SWITCH- (V91929) (OPT (VK6596))		1
XA	HWBUN1146D5B	.TERMINAL BLOCK- (VK0574)		1
		MISSING ITEM NO. NOT APPLICABLE		

- ITEM NOT ILLUSTRATED

ELEVATOR AND TAB

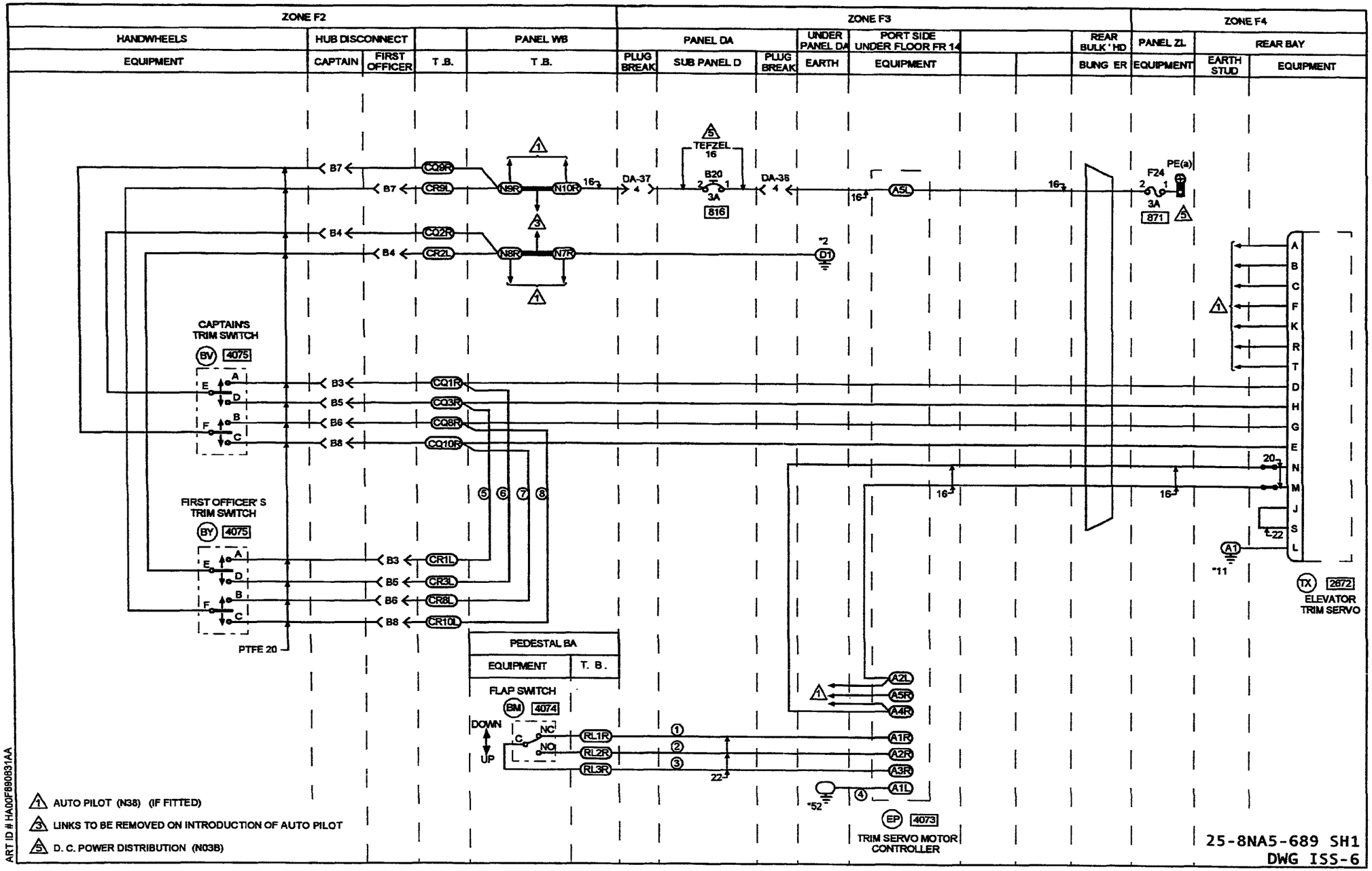
ZONE F2
ZONE F3
ZONE F4
HANDWHEELS
EQUIPMENT
HUB DISCONNECT
CAPTAIN
FIRST OFFICER
T.B.
PANEL WB
T.B.
PANEL DA
PLUG BREAK
SUB PANEL D
PLUG BREAK
UNDER PANEL DA
EARTH
PORT SIDE UNDER FLOOR FR 14
EQUIPMENT
REAR BULK'HD
BUNG ER
PANEL ZL
EQUIPMENT
REAR BAY
EARTH STUD
EQUIPMENT
TEFZEL 16
B20
3A
816
DA-37
DA-36
A5L
F24
PE(a)
3A
871
CAPTAINS TRIM SWITCH
BV 4075
FIRST OFFICER'S TRIM SWITCH
BY 4075
PTFE 20
PEDESTAL BA
EQUIPMENT
T. B.
FLAP SWITCH
BM 4074
DOWN
UP
NC
NO
TX 2672
ELEVATOR TRIM SERVO
EP 4073
TRIM SERVO MOTOR CONTROLLER
1 AUTO PILOT (N38) (IF FITTED)
3 LINKS TO BE REMOVED ON INTRODUCTION OF AUTO PILOT
5 D. C. POWER DISTRIBUTION (N03B)
ART ID # HA00F980831AA
25-8NA5-689 SH1
DWG ISS-6

IDENT	PART NUMBER	1234567 NOMENCLATURE	EFFECT FROM TO	UNITS PER ASSY
		ELEVATOR ELECTRIC TRIM	091098 100104 106120 122160 162162 164276	
	25-8NA5-689	WIRING DIAGRAM- (MOD 253149C)		RF
A-EP	HWBUN1736D5B	.TERMINAL BLOCK- (VK0574) (USED ON 25-8NF841-1A)		1
B-CAPT	TJ12E02-02	.TERMINAL MODULE- (VK1793)		1
B-FO	TJ12E02-02	.TERMINAL MODULE- (VK1793)		1
BM-BA	1SX1T	.MICRO SWITCH-FLAP (V91929) (OPT (VK6596))		1
BV	309-4316	.SWITCH- (V81579)		1
BY	309-4316	.SWITCH- (V81579)		1
B20-DAD	483TCG11J5-3A	.CIRCUIT BREAKER-3A (VU0091)		1
B3-CAPT	1841-1-5620	.CONTACT- (VK1793)		2
B3-FO	1841-1-5620	.CONTACT- (VK1793)		2
B4-CAPT	1841-1-5620	.CONTACT- (VK1793)		2
B4-FO	1841-1-5620	.CONTACT- (VK1793)		2
B5-CAPT	1841-1-5620	.CONTACT- (VK1793)		2
B5-FO	1841-1-5620	.CONTACT- (VK1793)		2
B6-CAPT	1841-1-5620	.CONTACT- (VK1793)		2
B6-FO	1841-1-5620	.CONTACT- (VK1793)		2
B7-CAPT	1841-1-5620	.CONTACT- (VK1793)		2
B7-FO	1841-1-5620	.CONTACT- (VK1793)		2
B8-CAPT	1841-1-5620	.CONTACT- (VK1793)		2
B8-FO	1841-1-5620	.CONTACT- (VK1793)		2
CQ	HWBUN1146D10B	.TERMINAL BLOCK- (VK0574)		1
		MISSING ITEM NO. NOT APPLICABLE		

– ITEM NOT ILLUSTRATED

IDENT	PART NUMBER	1234567 NOMENCLATURE	EFFECT FROM TO	UNITS PER ASSY
CR	HWBUN1146D10B	.TERMINAL BLOCK- (VK0574)		1
DA36-P	MTCR16104P	.CONNECTOR-PIN (VK1010)		1
DA36-R	MTCR10104S	.CONNECTOR-SOCKET (VK1010)		1
DA37-P	MTCR16104P	.CONNECTOR-PIN (VK1010)		1
DA37-R	MTCR10104S	.CONNECTOR-SOCKET (VK1010)		1
EP	25-8NF841-1A	.TRIM SERVO CONTROLLER- (COMPRISING: TERMINAL BLOCK HWBUN1736D5B (VK0574))		1
ER	422252-12	.BUNG- (VK1793)		1
F24-ZL	5920-99-0120075	.FUSE-3A (VK0657)		1
N-WB	72444-030-0AV2	.TERMINAL BLOCK- (VK0574)		1
RL-BA	HWBUN1736D5B	.TERMINAL BLOCK- (VK0574)		1
TX	622-3260-001	.SERVOMOTOR-ELEVATOR TRIM (VK0652) (USED WITH CONNECTORS: 6020-14-19SNCONDD (VK1793) 320559 (VK1636))		1
		MISSING ITEM NO. NOT APPLICABLE		

– ITEM NOT ILLUSTRATED

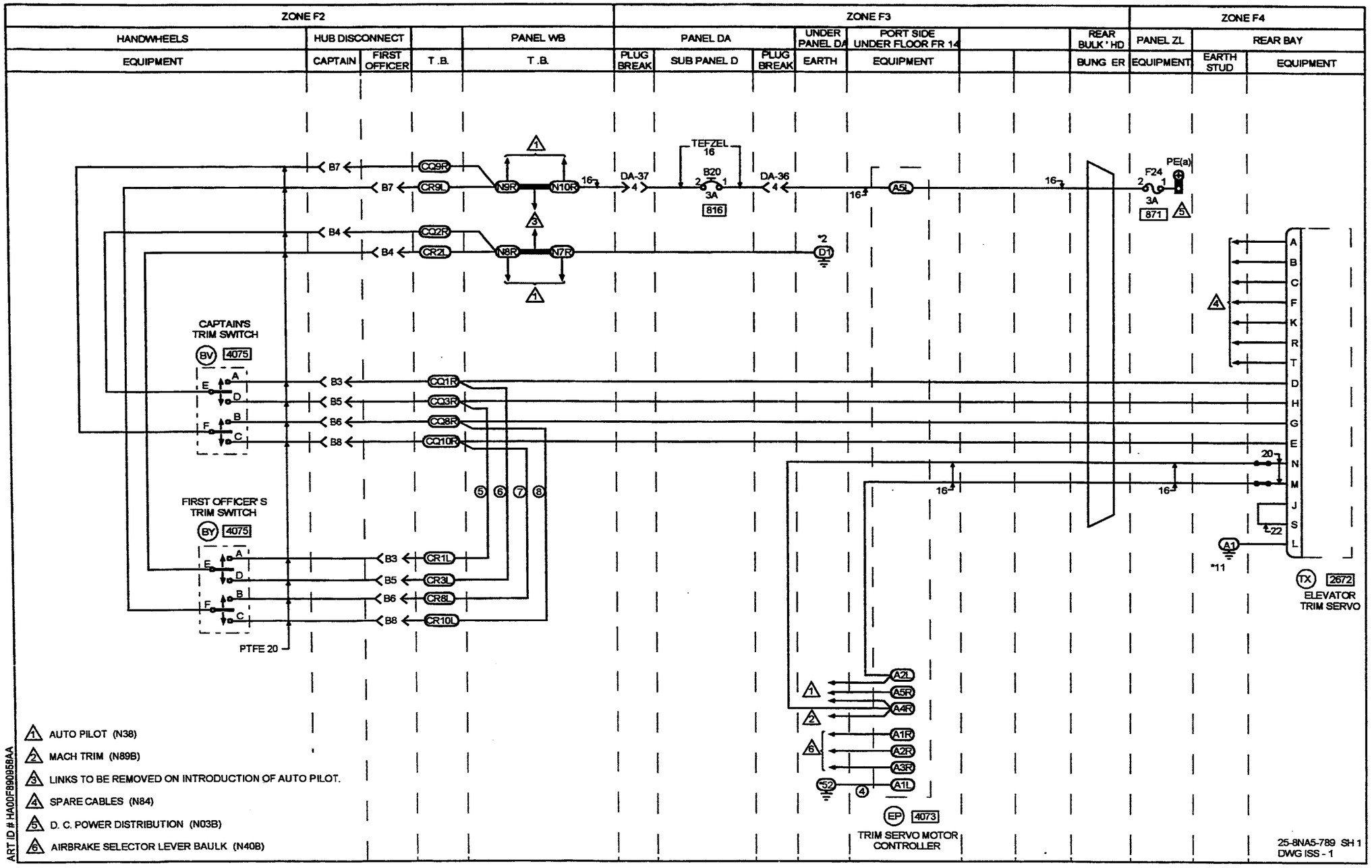
ZONE F2
ZONE F3
ZONE F4
HANDWHEELS
HUB DISCONNECT
PANEL WB
PANEL DA
UNDER PANEL DA
PORT SIDE UNDER FLOOR FR 14
REAR BULK' HD
PANEL ZL
REAR BAY
EQUIPMENT
CAPTAIN
FIRST OFFICER
T.B.
T.B.
PLUG BREAK
SUB PANEL D
PLUG BREAK
EARTH
EQUIPMENT
BUNG ER
EQUIPMENT
EARTH STUD
EQUIPMENT
TEFZEL 16
B20
3A
816
DA-37
DA-36
PE(a)
F24
3A
871
CAPTAIN'S TRIM SWITCH
BV 4075
FIRST OFFICER'S TRIM SWITCH
BY 4075
PTFE 20
TX 2672
ELEVATOR TRIM SERVO
EP 4073
TRIM SERVO MOTOR CONTROLLER
1 AUTO PILOT (N38)
2 MACH TRIM (N89B)
3 LINKS TO BE REMOVED ON INTRODUCTION OF AUTO PILOT.
4 SPARE CABLES (N84)
5 D. C. POWER DISTRIBUTION (N03B)
6 AIRBRAKE SELECTOR LEVER BAULK (N40B)
ART ID # HA00F8909B8AA
25-8NA5-789 SH 1
DWG ISS - 1

IDENT	PART NUMBER	1234567 NOMENCLATURE	EFFECT FROM TO	UNITS PER ASSY
		ELEVATOR ELECTRIC TRIM	099099 105105 121121 161161 163163	
	25-8NA5-789	WIRING DIAGRAM- (MOD 252994C)		RF
A-EP	HWBUN1736D5B	.TERMINAL BLOCK- (VK0574) (USED ON 25-8NF841-1A)		1
B-CAPT	TJ12E02-02	.TERMINAL MODULE- (VK1793)		1
B-FO	TJ12E02-02	.TERMINAL MODULE- (VK1793)		1
BV	309-4316	.SWITCH- (V81579)		1
BY	309-4316	.SWITCH- (V81579)		1
B20-DAD	483TCG11J5-3A	.CIRCUIT BREAKER-3A (VU0091)		1
B3-CAPT	1841-1-5620	.CONTACT- (VK1793)		2
B3-FO	1841-1-5620	.CONTACT- (VK1793)		2
B4-CAPT	1841-1-5620	.CONTACT- (VK1793)		2
B4-FO	1841-1-5620	.CONTACT- (VK1793)		2
B5-CAPT	1841-1-5620	.CONTACT- (VK1793)		2
B5-FO	1841-1-5620	.CONTACT- (VK1793)		2
B6-CAPT	1841-1-5620	.CONTACT- (VK1793)		2
B6-FO	1841-1-5620	.CONTACT- (VK1793)		2
B7-CAPT	1841-1-5620	.CONTACT- (VK1793)		2
B7-FO	1841-1-5620	.CONTACT- (VK1793)		2
B8-CAPT	1841-1-5620	.CONTACT- (VK1793)		2
B8-FO	1841-1-5620	.CONTACT- (VK1793)		2
CQ	HWBUN1146D10B	.TERMINAL BLOCK- (VK0574)		1
CR	HWBUN1146D10B	.TERMINAL BLOCK- (VK0574)		1
DA36-P	MTCR16104P	.CONNECTOR-PIN (VK1010)		1
		MISSING ITEM NO. NOT APPLICABLE		

– ITEM NOT ILLUSTRATED

IDENT	PART NUMBER	1234567 NOMENCLATURE	EFFECT FROM TO	UNITS PER ASSY
DA36-R	MTCR10104S	.CONNECTOR-SOCKET (VK1010)		1
DA37-P	MTCR16104P	.CONNECTOR-PIN (VK1010)		1
DA37-R	MTCR10104S	.CONNECTOR-SOCKET (VK1010)		1
EP	25-8NF841-1A	.TRIM SERVO CONTROLLER- (COMPRISING: TERMINAL BLOCK HWBUN1736D5B (VK0574))		1
ER	422252-12	.BUNG- (VK1793)		1
F24-ZL	5920-99-0120075	.FUSE-3A (VK0657)		1
N-WB	72444-030-0AV2	.TERMINAL BLOCK- (VK0574)		1
TX	622-3260-001	.SERVOMOTOR-ELEVATOR TRIM (VK0652) (USED WITH CONNECTORS: 6020-14-19SNCONDD (VK1793) 320559 (VK1636))		1
		MISSING ITEM NO. NOT APPLICABLE		

– ITEM NOT ILLUSTRATED

STALL IDENT/WARNING

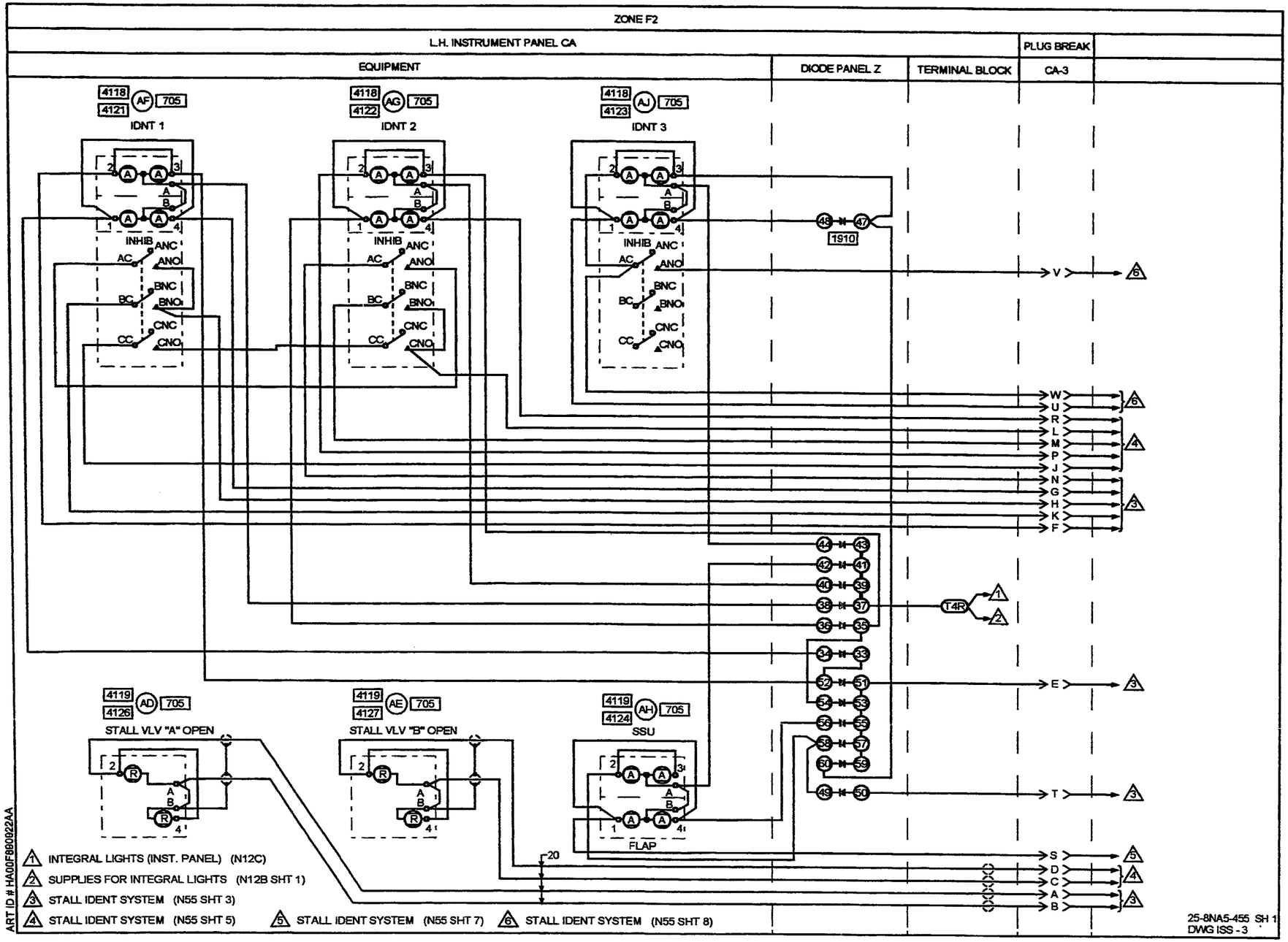
ZONE F2
L.H. INSTRUMENT PANEL CA
PLUG BREAK
EQUIPMENT
DIODE PANEL Z
TERMINAL BLOCK
CA-3
4118 4121 AF 705
IDNT 1
4118 4122 AG 705
IDNT 2
4118 4123 AJ 705
IDNT 3
INHIB
ANC
ANO
BNC
BNO
CNC
CNO
AC
BC
CC
1910
T4R
4119 4126 AD 705
STALL VLV "A" OPEN
4119 4127 AE 705
STALL VLV "B" OPEN
4119 4124 AH 705
SSU
FLAP
V
W
U
R
L
M
P
J
N
G
H
K
F
E
T
S
D
C
A
B
1 INTEGRAL LIGHTS (INST. PANEL) (N12C)
2 SUPPLIES FOR INTEGRAL LIGHTS (N12B SHT 1)
3 STALL IDENT SYSTEM (N55 SHT 3)
4 STALL IDENT SYSTEM (N55 SHT 5)
5 STALL IDENT SYSTEM (N55 SHT 7)
6 STALL IDENT SYSTEM (N55 SHT 8)
ART ID # HA00F980922AA
25-8NA5-455 SH 1
DWG ISS - 3

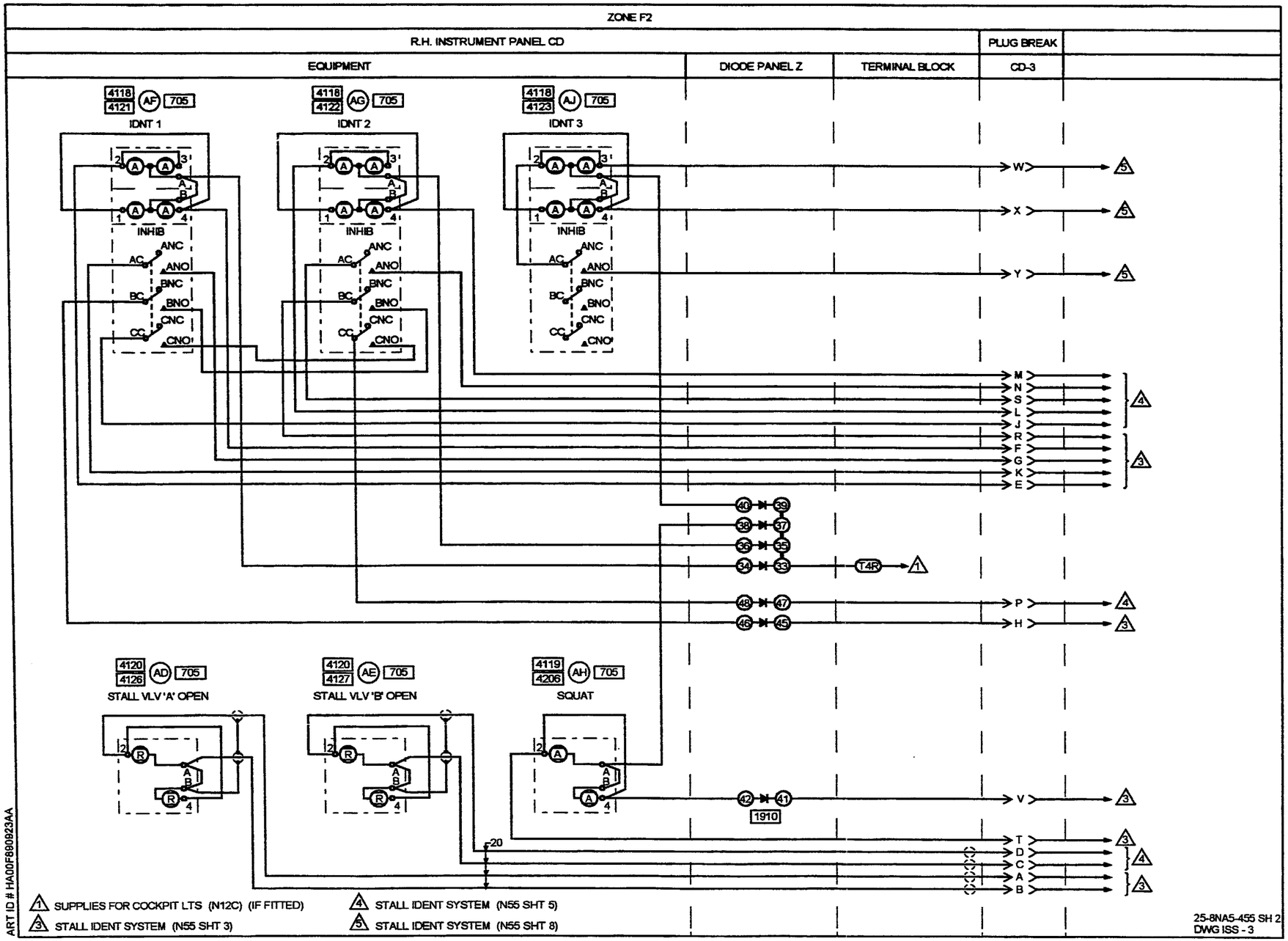
ZONE F2
R.H. INSTRUMENT PANEL CD
PLUG BREAK
EQUIPMENT
DIODE PANEL Z
TERMINAL BLOCK
CD-3
4118 4121 AF 705
IDNT 1
4118 4122 AG 705
IDNT 2
4118 4123 AJ 705
IDNT 3
INHIB
ANC
ANO
BNC
BNO
CNC
CNO
W
X
Y
M
N
S
L
J
R
F
G
K
E
T4R
P
H
4120 4126 AD 705
STALL VLV 'A' OPEN
4120 4127 AE 705
STALL VLV 'B' OPEN
4119 4206 AH 705
SQUAT
1910
V
T
D
C
A
B
20
1 SUPPLIES FOR COCKPIT LTS (N12C) (IF FITTED)
3 STALL IDENT SYSTEM (N55 SHT 3)
4 STALL IDENT SYSTEM (N55 SHT 5)
5 STALL IDENT SYSTEM (N55 SHT 8)
25-8NA5-455 SH 2
DWG ISS - 3
ART ID # HA00F890923AA

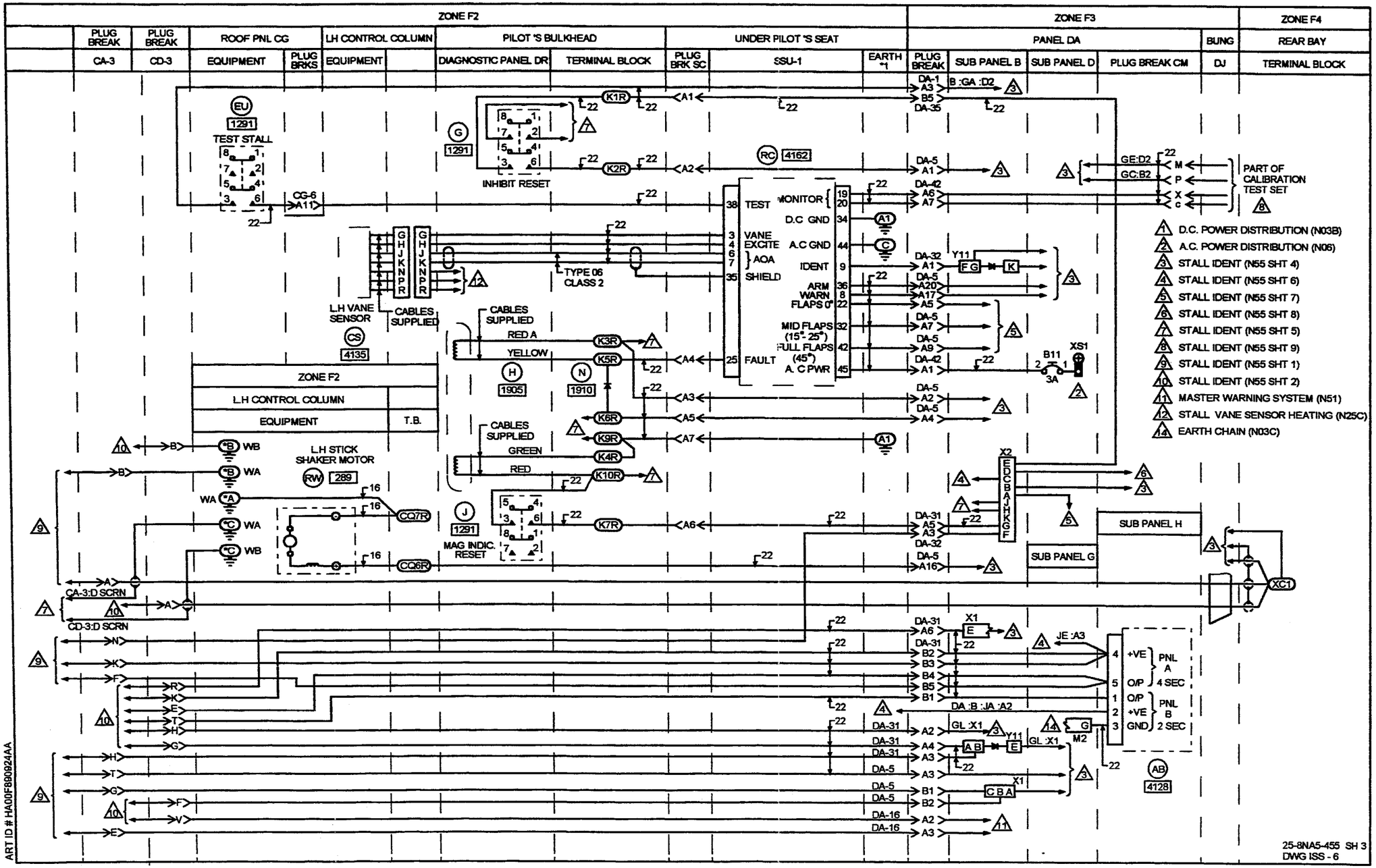
ZONE F2
ZONE F3
ZONE F4
PLUG BREAK
ROOF PNL CG
LH CONTROL COLUMN
PILOT 'S BULKHEAD
UNDER PILOT 'S SEAT
PANEL DA
BUNG
REAR BAY
CA-3
CD-3
EQUIPMENT
PLUG BRKS
DIAGNOSTIC PANEL DR
TERMINAL BLOCK
PLUG BRK SC
SSU-1
EARTH *1
SUB PANEL B
SUB PANEL D
PLUG BREAK CM
DJ
TEST STALL
INHIBIT RESET
TEST
MONITOR
D.C GND
VANE EXCITE
A.C GND
AOA
IDENT
SHIELD
ARM WARN
FLAPS 0°
MID FLAPS (15°-25°)
FULL FLAPS (45°)
FAULT
A.C PWR
PART OF CALIBRATION TEST SET
D.C. POWER DISTRIBUTION (N03B)
A.C. POWER DISTRIBUTION (N06)
STALL IDENT (N55 SHT 4)
STALL IDENT (N55 SHT 6)
STALL IDENT (N55 SHT 7)
STALL IDENT (N55 SHT 8)
STALL IDENT (N55 SHT 5)
STALL IDENT (N55 SHT 9)
STALL IDENT (N55 SHT 1)
STALL IDENT (N55 SHT 2)
MASTER WARNING SYSTEM (N51)
STALL VANE SENSOR HEATING (N25C)
EARTH CHAIN (N03C)
L.H VANE SENSOR
CABLES SUPPLIED
TYPE 06 CLASS 2
RED A
YELLOW
GREEN
RED
L.H STICK SHAKER MOTOR
MAG INDIC. RESET
SUB PANEL H
SUB PANEL G
CA-3:D SCRN
CD-3:D SCRN
PNL A 4 SEC
PNL B 2 SEC
25-8NA5-455 SH 3
DWG ISS - 6
ART ID # HA00F890924AA

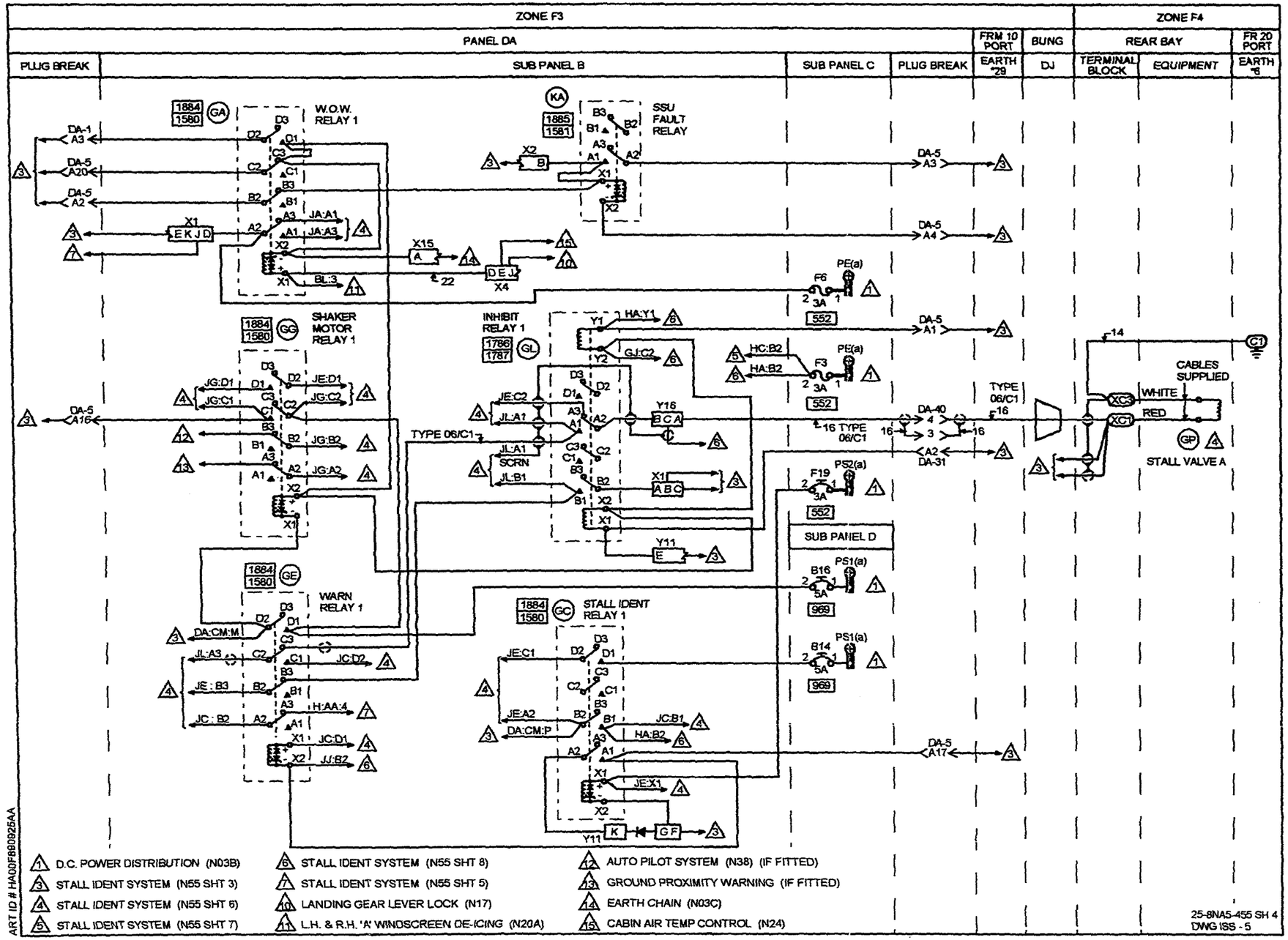
ZONE F3
ZONE F4
PANEL DA
FRM 10 PORT
BUNG
REAR BAY
FR 20 PORT
PLUG BREAK
SUB PANEL B
SUB PANEL C
PLUG BREAK
EARTH *29
DJ
TERMINAL BLOCK
EQUIPMENT
EARTH *6
W.O.W. RELAY 1
SSU FAULT RELAY
SHAKER MOTOR RELAY 1
INHIBIT RELAY 1
WARN RELAY 1
STALL IDENT RELAY 1
SUB PANEL D
CABLES SUPPLIED
WHITE
RED
STALL VALVE A
TYPE 06/C1
1 D.C. POWER DISTRIBUTION (N03B)
3 STALL IDENT SYSTEM (N55 SHT 3)
4 STALL IDENT SYSTEM (N55 SHT 6)
5 STALL IDENT SYSTEM (N55 SHT 7)
6 STALL IDENT SYSTEM (N55 SHT 8)
7 STALL IDENT SYSTEM (N55 SHT 5)
10 LANDING GEAR LEVER LOCK (N17)
11 L.H. & R.H. 'A' WINDSCREEN DE-ICING (N20A)
12 AUTO PILOT SYSTEM (N38) (IF FITTED)
13 GROUND PROXIMITY WARNING (IF FITTED)
14 EARTH CHAIN (N03C)
15 CABIN AIR TEMP CONTROL (N24)
ART ID # HA00F690925AA
25-8NA5-455 SH 4
DWG ISS - 5

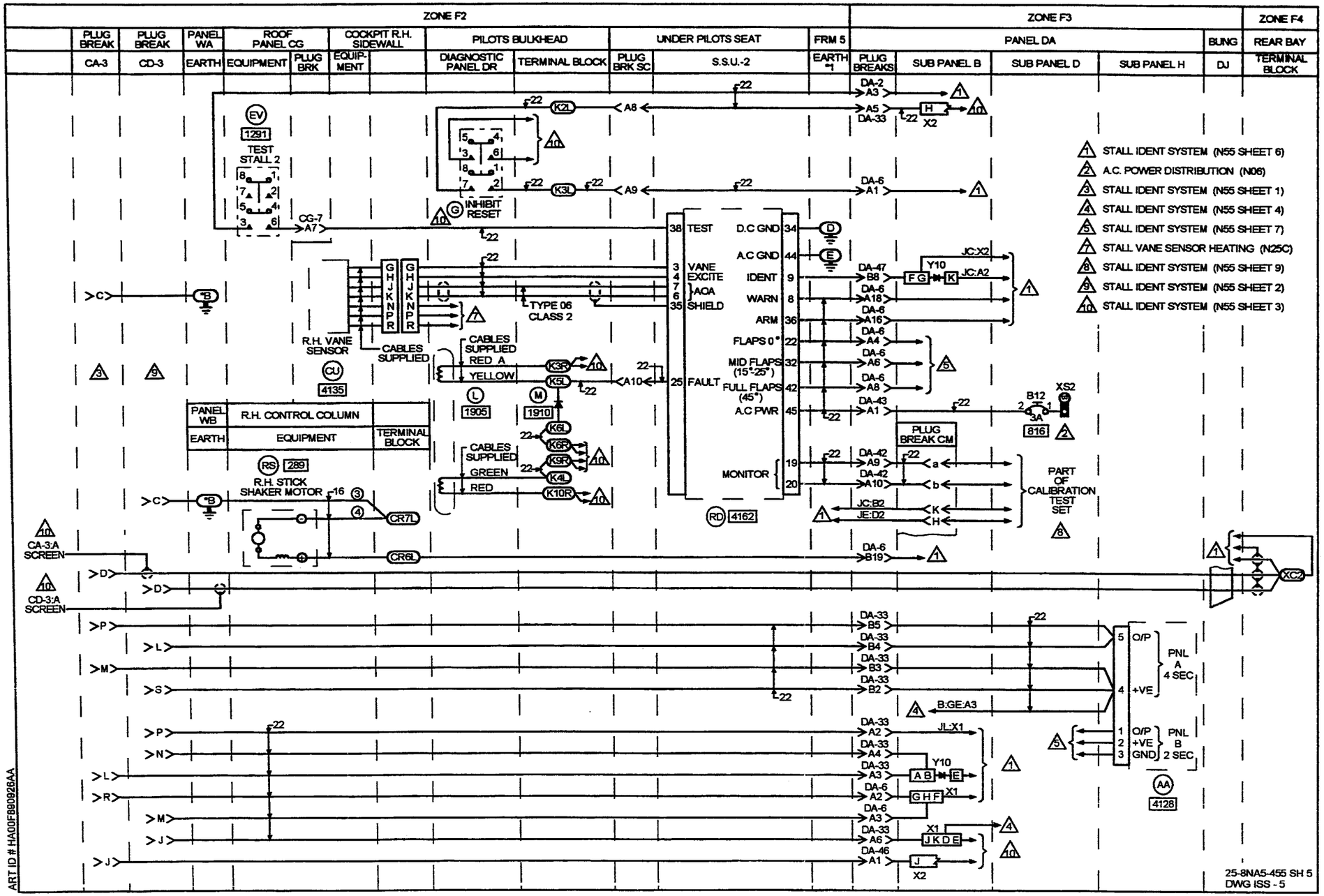
ZONE F2
ZONE F3
ZONE F4
PLUG BREAK CA-3
PLUG BREAK CD-3
PANEL WA EARTH
ROOF PANEL CG EQUIPMENT
PLUG BRK
COCKPIT R.H. SIDEWALL EQUIPMENT
PILOTS BULKHEAD DIAGNOSTIC PANEL DR
TERMINAL BLOCK
UNDER PILOTS SEAT PLUG BRK SC
S.S.U.-2
FRM 5 EARTH #1
PANEL DA PLUG BREAKS
SUB PANEL B
SUB PANEL D
SUB PANEL H
BUNG DJ
REAR BAY TERMINAL BLOCK
TEST STALL 2
INHIBIT RESET
TEST
VANE EXCITE
AOA
SHIELD
FAULT
MONITOR
D.C GND
A.C GND
IDENT
WARN
ARM
FLAPS 0°
MID FLAPS (15°-25°)
FULL FLAPS (45°)
A.C PWR
TYPE 06 CLASS 2
R.H. VANE SENSOR
CABLES SUPPLIED
RED A
YELLOW
GREEN
RED
PANEL WB
R.H. CONTROL COLUMN
EARTH
EQUIPMENT
TERMINAL BLOCK
R.H. STICK SHAKER MOTOR
PLUG BREAK CM
PART OF CALIBRATION TEST SET
CA-3:A SCREEN
CD-3:A SCREEN
O/P
+VE
GND
PNL A 4 SEC
PNL B 2 SEC
STALL IDENT SYSTEM (N55 SHEET 6)
A.C. POWER DISTRIBUTION (N06)
STALL IDENT SYSTEM (N55 SHEET 1)
STALL IDENT SYSTEM (N55 SHEET 4)
STALL IDENT SYSTEM (N55 SHEET 7)
STALL VANE SENSOR HEATING (N25C)
STALL IDENT SYSTEM (N55 SHEET 9)
STALL IDENT SYSTEM (N55 SHEET 2)
STALL IDENT SYSTEM (N55 SHEET 3)
ART ID # HA00F890926AA
25-8NA5-455 SH 5
DWG ISS - 5

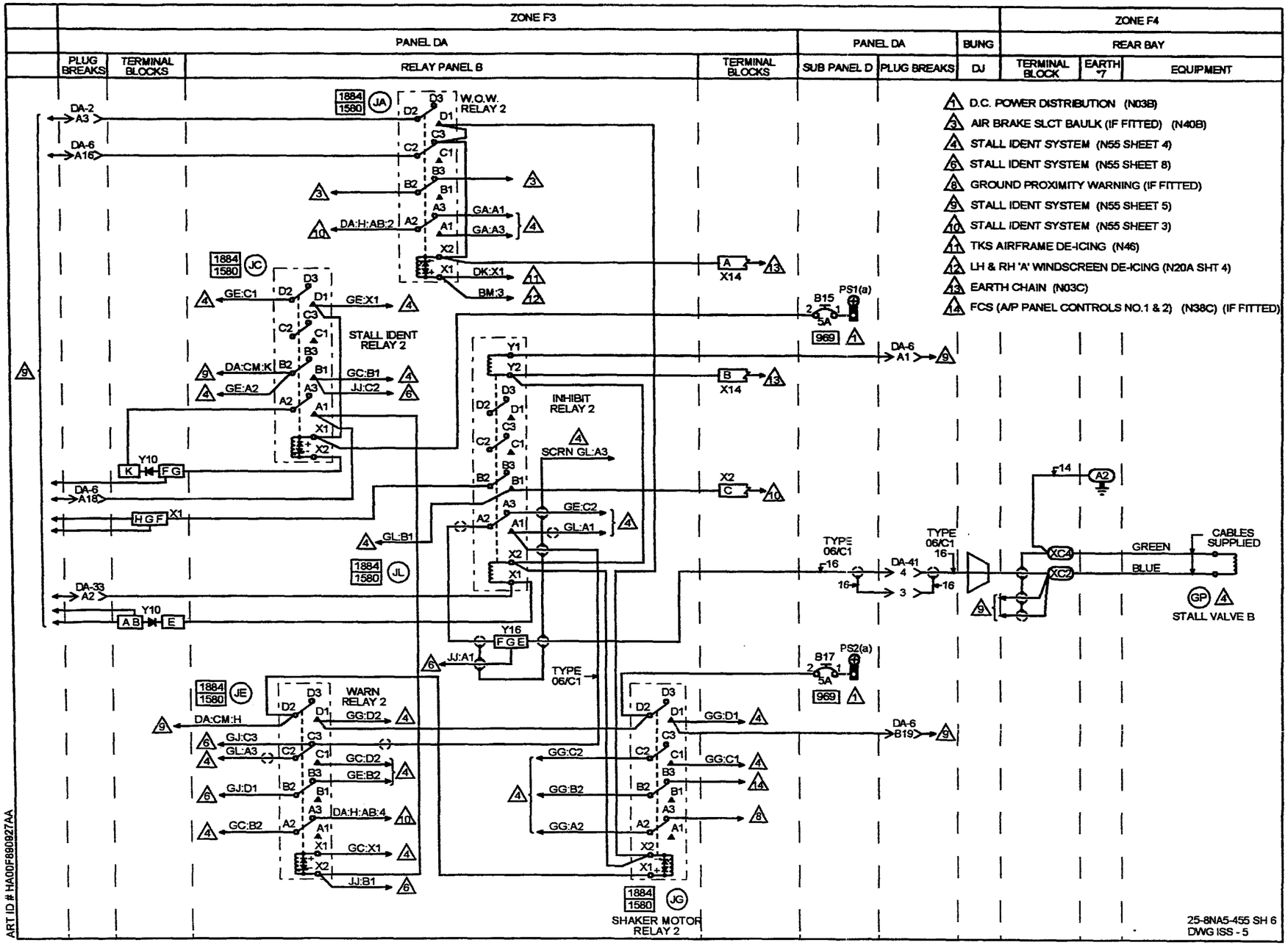
ZONE F3
ZONE F4
PANEL DA
PANEL DA
BUNG
REAR BAY
PLUG BREAKS
TERMINAL BLOCKS
RELAY PANEL B
TERMINAL BLOCKS
SUB PANEL D
PLUG BREAKS
DJ
TERMINAL BLOCK
EARTH *7
EQUIPMENT
W.O.W. RELAY 2
STALL IDENT RELAY 2
INHIBIT RELAY 2
WARN RELAY 2
SHAKER MOTOR RELAY 2
TYPE 06/C1
CABLES SUPPLIED
GREEN
BLUE
STALL VALVE B
PS1(a)
PS2(a)
1 D.C. POWER DISTRIBUTION (N03B)
3 AIR BRAKE SLCT BAULK (IF FITTED) (N40B)
4 STALL IDENT SYSTEM (N55 SHEET 4)
6 STALL IDENT SYSTEM (N55 SHEET 8)
8 GROUND PROXIMITY WARNING (IF FITTED)
9 STALL IDENT SYSTEM (N55 SHEET 5)
10 STALL IDENT SYSTEM (N55 SHEET 3)
11 TKS AIRFRAME DE-ICING (N46)
12 LH & RH 'A' WINDSCREEN DE-ICING (N20A SHT 4)
13 EARTH CHAIN (N03C)
14 FCS (A/P PANEL CONTROLS NO.1 & 2) (N38C) (IF FITTED)
ART ID # HA0DF680927AA
25-8NA5-455 SH 6
DWG ISS - 5

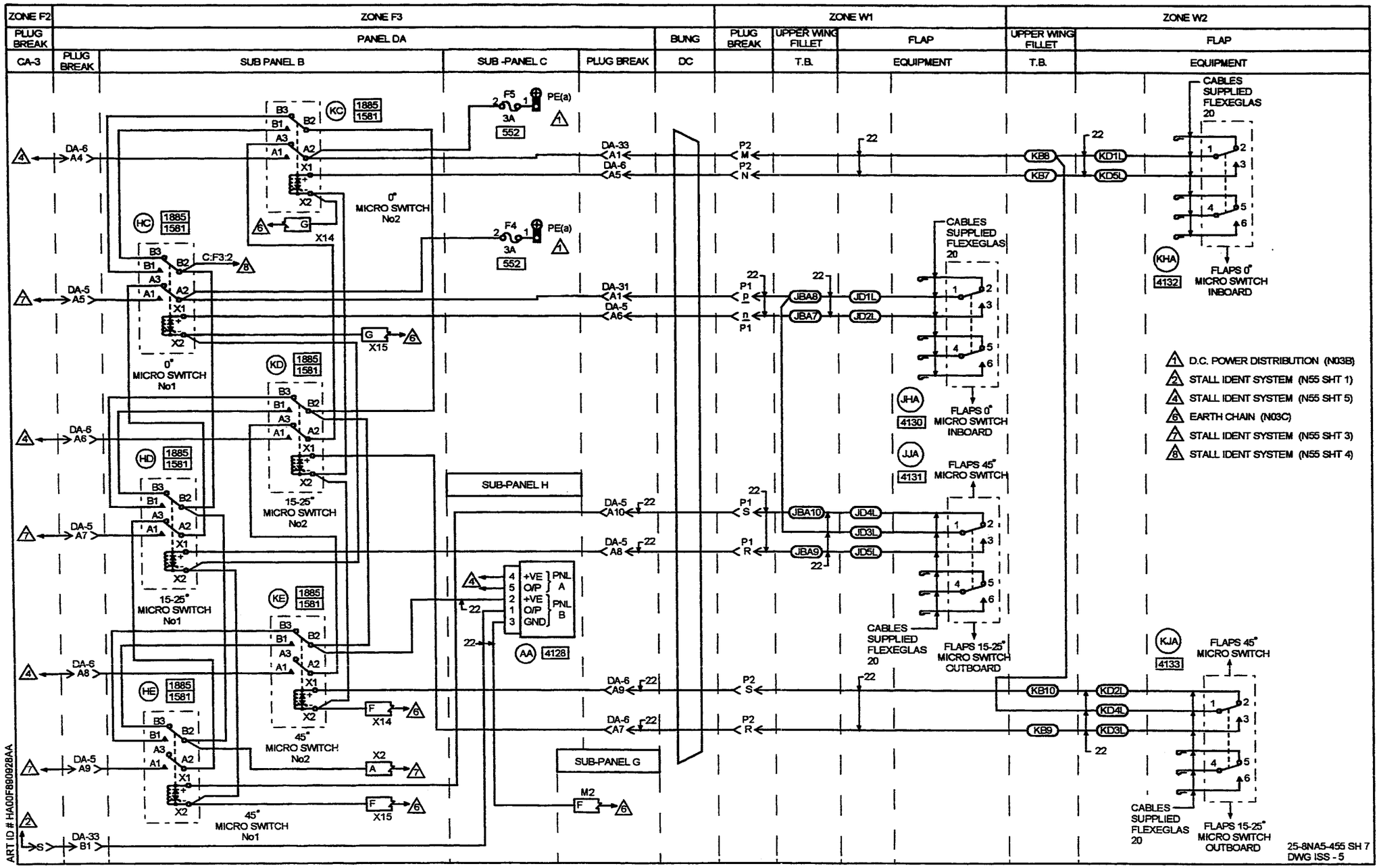
ZONE F2
ZONE F3
ZONE W1
ZONE W2
PLUG BREAK
PANEL DA
BUNG
PLUG BREAK
UPPER WING FILLET
FLAP
UPPER WING FILLET
FLAP
CA-3
PLUG BREAK
SUB PANEL B
SUB -PANEL C
PLUG BREAK
DC
T.B.
EQUIPMENT
T.B.
EQUIPMENT
CABLES SUPPLIED FLEXEGLAS 20
0° MICRO SWITCH No2
0° MICRO SWITCH No1
15-25° MICRO SWITCH No2
15-25° MICRO SWITCH No1
45° MICRO SWITCH No2
45° MICRO SWITCH No1
SUB-PANEL H
SUB-PANEL G
+VE O/P
+VE O/P
GND
PNL A
PNL B
FLAPS 0° MICRO SWITCH INBOARD
FLAPS 45° MICRO SWITCH
FLAPS 15-25° MICRO SWITCH OUTBOARD
1 D.C. POWER DISTRIBUTION (N03B)
2 STALL IDENT SYSTEM (N55 SHT 1)
4 STALL IDENT SYSTEM (N55 SHT 5)
6 EARTH CHAIN (N03C)
7 STALL IDENT SYSTEM (N55 SHT 3)
8 STALL IDENT SYSTEM (N55 SHT 4)
25-8NA5-455 SH 7
DWG ISS - 5
ART ID # HA00F690928AA

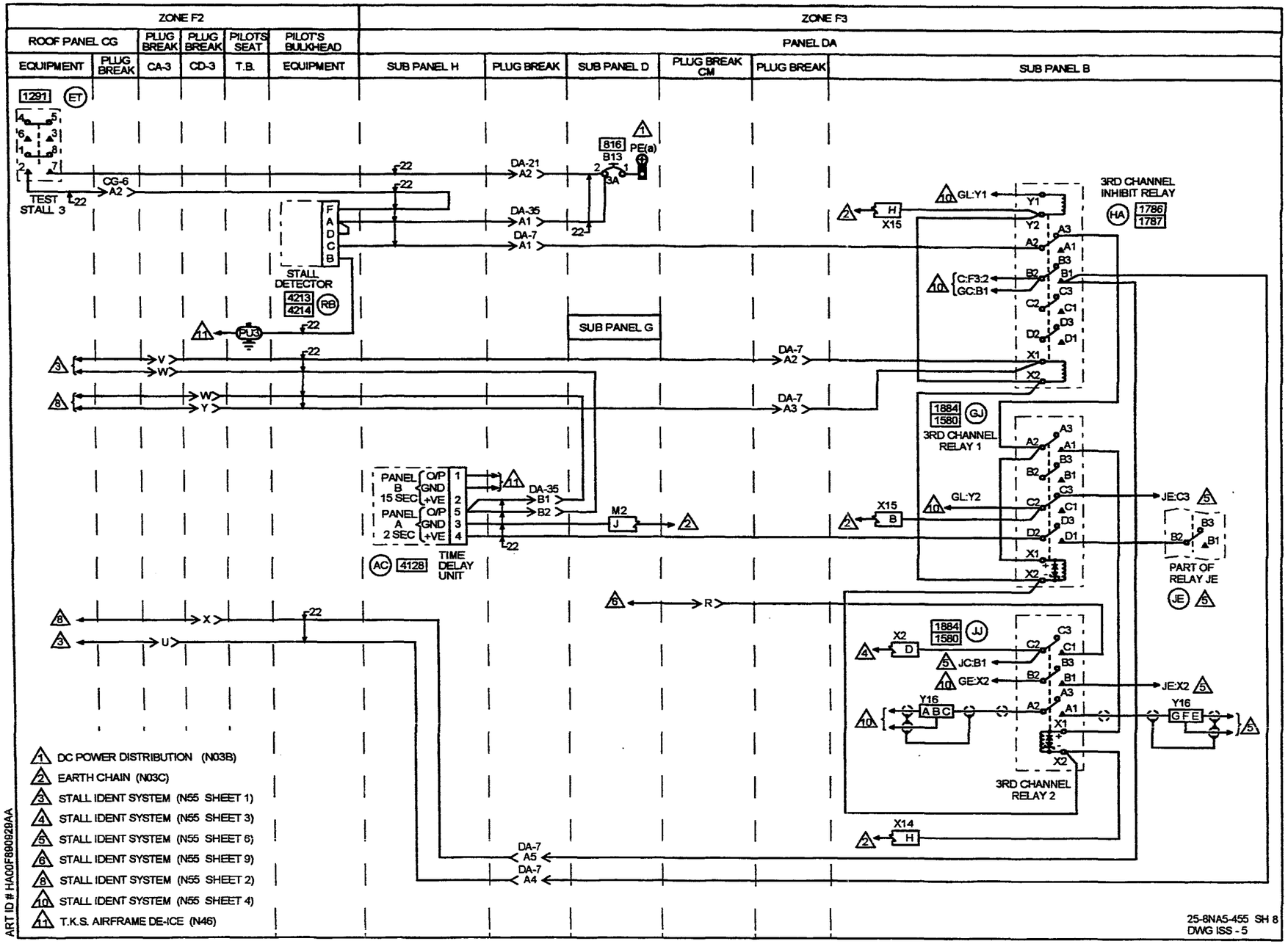
ZONE F2
ZONE F3
ROOF PANEL CG
PLUG BREAK
PLUG BREAK
PILOTS SEAT
PILOT'S BULKHEAD
PANEL DA
EQUIPMENT
PLUG BREAK
CA-3
CD-3
T.B.
EQUIPMENT
SUB PANEL H
PLUG BREAK
SUB PANEL D
PLUG BREAK CM
PLUG BREAK
SUB PANEL B
1291
ET
TEST STALL 3
CG-6
A2
DA-21
A2
816
B13
PE(a)
DA-35
A1
DA-7
A1
STALL DETECTOR
4213
4214
RB
PU3
SUB PANEL G
DA-7
A2
DA-7
A3
3RD CHANNEL INHIBIT RELAY
HA
1786
1787
GL:Y1
X15
C:F3:2
GC:B1
1884
1580
GJ
3RD CHANNEL RELAY 1
GL:Y2
JE:C3
PART OF RELAY JE
JE
PANEL B 15 SEC
PANEL A 2 SEC
O/P
GND
+VE
TIME DELAY UNIT
AC
4128
M2
DA-35
B1
B2
X14
JJ
JC:B1
GE:X2
JE:X2
Y16
3RD CHANNEL RELAY 2
DA-7
A5
DA-7
A4
1 DC POWER DISTRIBUTION (N03B)
2 EARTH CHAIN (N03C)
3 STALL IDENT SYSTEM (N55 SHEET 1)
4 STALL IDENT SYSTEM (N55 SHEET 3)
5 STALL IDENT SYSTEM (N55 SHEET 6)
6 STALL IDENT SYSTEM (N55 SHEET 9)
8 STALL IDENT SYSTEM (N55 SHEET 2)
10 STALL IDENT SYSTEM (N55 SHEET 4)
11 T.K.S. AIRFRAME DE-ICE (N46)
ART ID # HA00F890929AA
25-8NA5-455 SH 8
DWG ISS - 5

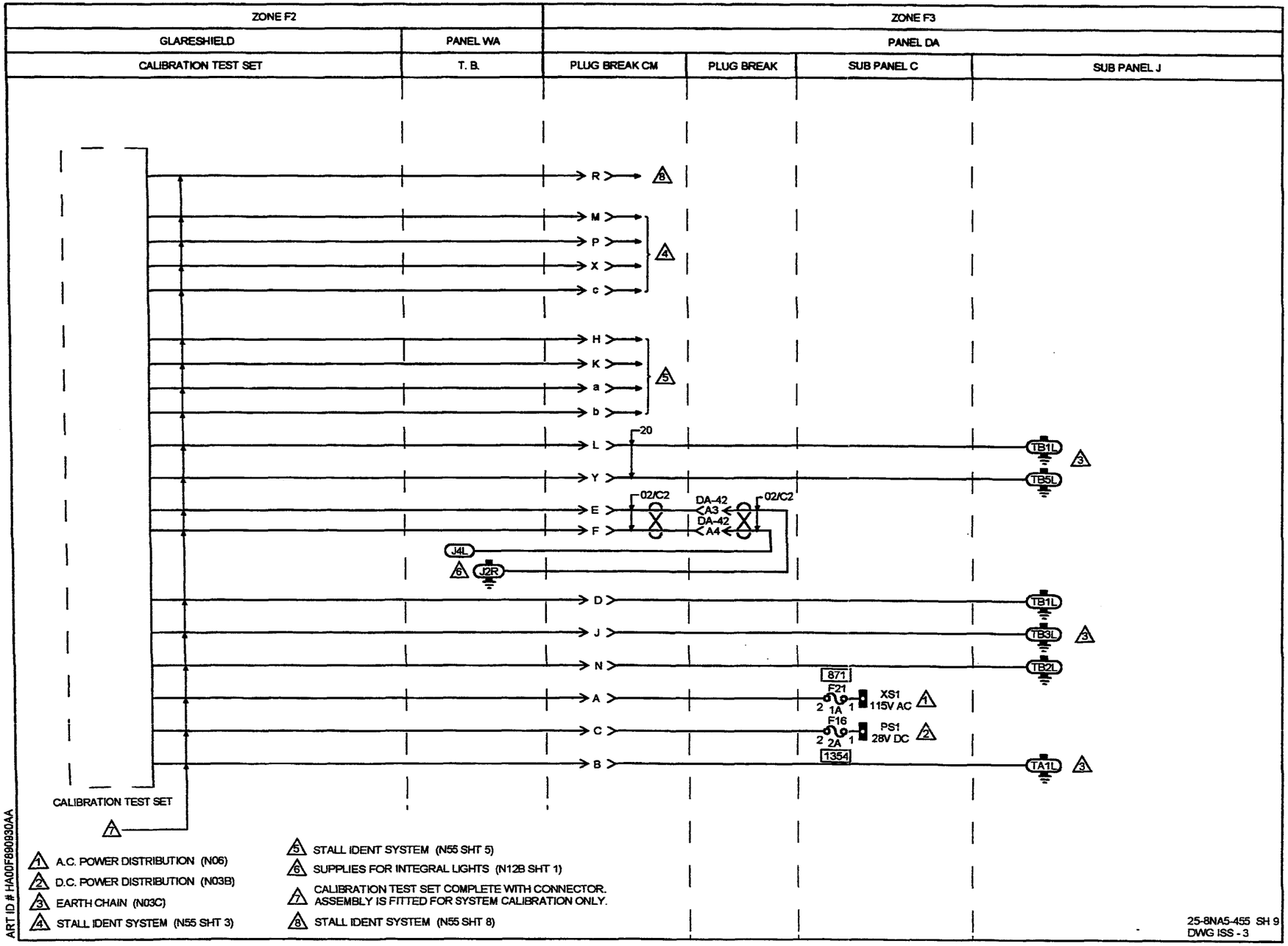
ZONE F2
ZONE F3
GLARESHIELD
PANEL WA
PANEL DA
CALIBRATION TEST SET
T. B.
PLUG BREAK CM
PLUG BREAK
SUB PANEL C
SUB PANEL J
R
M
P
X
c
H
K
a
b
L
Y
E
F
D
J
N
A
C
B
20
02/C2
DA-42
A3
A4
J4L
J2R
TB1L
TB5L
TB3L
TB2L
TA1L
871
F21
1A
XS1
115V AC
F16
2A
PS1
28V DC
1354
CALIBRATION TEST SET
A.C. POWER DISTRIBUTION (N06)
D.C. POWER DISTRIBUTION (N03B)
EARTH CHAIN (N03C)
STALL IDENT SYSTEM (N55 SHT 3)
STALL IDENT SYSTEM (N55 SHT 5)
SUPPLIES FOR INTEGRAL LIGHTS (N12B SHT 1)
CALIBRATION TEST SET COMPLETE WITH CONNECTOR. ASSEMBLY IS FITTED FOR SYSTEM CALIBRATION ONLY.
STALL IDENT SYSTEM (N55 SHT 8)
ART ID # HA00F890930AA
25-8NA5-455 SH 9
DWG ISS - 3

IDENT	PART NUMBER	1234567 NOMENCLATURE	EFFECT FROM TO	UNITS PER ASSY
		STALL IDENT SYSTEM	091110	
	25-8NA5-455	WIRING DIAGRAM- (MOD 253149C)		RF
AA-DAH	25-8NF977-1A	.TIME DELAY UNIT		1
AB-DAH	25-8NF977-3A	.TIME DELAY UNIT		1
AC-DAH	25-8NF977-5A	.TIME DELAY UNIT		1
AD-CA	99-930	.INDICATOR LAMP- (V32245)		1
AD-CD	99-930	.INDICATOR LAMP- (V32245)		1
AE-CA	99-930	.INDICATOR LAMP- (V32245)		1
AE-CD	99-930	.INDICATOR LAMP- (V32245)		1
AF-CA	99-913	.LAMP SWITCH MODULE- (V32245)		1
AF-CD	99-913	.LAMP SWITCH MODULE- (V32245)		1
AG-CA	99-913	.LAMP SWITCH MODULE- (V32245)		1
AG-CD	99-913	.LAMP SWITCH MODULE- (V32245)		1
AH-CA	99-930	.INDICATOR LAMP- (V32245)		1
AH-CD	99-930	.INDICATOR LAMP- (V32245)		1
AJ-CA	99-913	.LAMP SWITCH MODULE- (V32245)		1
AJ-CD	99-913	.LAMP SWITCH MODULE- (V32245)		1
B11-DAD	483TCG11J85-3A	.CIRCUIT BREAKER-3AMP (VU0091)		1
B12-DAD	483TCG11J85-3A	.CIRCUIT BREAKER-3AMP (VU0091)		1
B13-DAD	483TCG11J85-3A	.CIRCUIT BREAKER-3AMP (VU0091)		1
B14-DAD	483TCG11J85-5A	.CIRCUIT BREAKER-5AAMP (VU0091)		1
B15-DAD	483TCG11J85-5A	.CIRCUIT BREAKER-5AMP (VU0091)		1
B16-DAD	483TCG11J85-5A	.CIRCUIT BREAKER-5AMP (VU0091)		1
B17-DAD	483TCG11J85-5A	.CIRCUIT BREAKER-5AMP (VU0091)		1
CA3-P	BAEREF000003457	.CONNECTOR-PIN (6027-16-26PNCONDC (VK1793))		1
CA3-R	BAEREF000003427	.CONNECTOR-SOCKET (6026-16-26SNCONDD (VK1793))		1
		MISSING ITEM NO. NOT APPLICABLE		

– ITEM NOT ILLUSTRATED

IDENT	PART NUMBER	1234567 NOMENCLATURE	EFFECT FROM TO	UNITS PER ASSY
CD3-P	BAEREF000003457	.CONNECTOR-PIN (6027-16-26PNCONDC (VK1793))		1
CD3-R	BAEREF000003427	.CONNECTOR-SOCKET (6026-16-26SNCONDD (VK1793))		1
CG6-P	MTC100YH2-009	.SHELL-PLUG (VK1010) (USED WITH WAFERS: TYPE A, MTC100KT2-1101 TYPE B, MTC100KT2-1102)		1
CG6-R	MTC100YH2-010	.SHELL-RECEPTACLE (VK1010) (USED WITH WAFERS: TYPE A, MTC100KT2-1103 TYPE B, MTC100KT2-1104)		1
CG7-P	MTC100YH2-009	.SHELL-PLUG (VK1010) (USED WITH WAFERS: TYPE A, MTC100KT2-1101 TYPE B, MTC100KT2-1102)		1
CG7-R	MTC100YH2-010	.SHELL-RECEPTACLE (VK1010) (USED WITH WAFERS: TYPE A, MTC100KT2-1103 TYPE B, MTC100KT2-1104)		1
CM-R	MS3470L16-26SN	.CONNECTOR-SOCKET (V96906) (USED WITH OUTLET: MS3154-16)		1
CQ	HWBUN1146D10B	.TERMINAL BLOCK- (VK0574)		1
CR	HWBUN1146D10B	.TERMINAL BLOCK- (VK0574)		1
CS	1703-12	.SENSOR- (V83326)		1
CU	1703-12	.SENSOR- (V83326)		1
DA1-P	MTC100YH1-003	.SHELL-PLUG (VK1010) (USED WITH WAFERS: TYPE A, MTC100KT1-1101 TYPE B, MTC100KTI-1102)		1
DA1-R	MTC100YH1-004	.SHELL-RECEPTACLE (VK1010) (USED WITH WAFERS: TYPE A, MTC100KT1-1103 TYPE B, MTC100KT1-1104)		1
		MISSING ITEM NO. NOT APPLICABLE		

– ITEM NOT ILLUSTRATED

IDENT	PART NUMBER	1234567 NOMENCLATURE	EFFECT FROM TO	UNITS PER ASSY
DA16-P	MTC100YH1-003	.SHELL-PLUG (VK1010) (USED WITH WAFERS: TYPE A, MTC100KT1-1101 TYPE B, MTC100KTI-1102)		1
DA16-R	MTC100YH1-004	.SHELL-RECEPTACLE (VK1010) (USED WITH WAFERS: TYPE A, MTC100KT1-1103 TYPE B, MTC100KT1-1104)		1
DA2-P	MTC100YH1-003	.SHELL-PLUG (VK1010) (USED WITH WAFERS: TYPE A, MTC100KT1-1101 TYPE B, MTC100KTI-1102)		1
DA2-R	MTC100YH1-004	.SHELL-RECEPTACLE (VK1010) (USED WITH WAFERS; TYPE A, MTC100KT1-1103 TYPE B, MTC100KT1-1104)		1
DA21-P	MTC100YH2-009	.SHELL-PLUG (VK1010) (USED WITH WAFERS: TYPE A, MTC100KT2-1101 TYPE B, MTC100KT2-1102)		1
DA21-R	MTC100YH2-010	.SHELL-RECEPTACLE (VK1010) (USED WITH WAFERS: TYPE A, MTC100KT2-1103 TYPE B, MTC100KT2-1104)		1
DA31-P	MTC100YH2-009	.SHELL-PLUG (VK1010) (USED WITH WAFERS: TYPE A, MTC100KT2-1101 TYPE B, MTC100KT2-1102)		1
DA31-R	MTC100YH2-010	.SHELL-RECEPTACLE (VK1010) (USED WITH WAFERS: TYPE A, MTC100KT2-1103 TYPE B, MTC100KT2-1104)		1
DA32-P	MTC100YH2-009	.SHELL-PLUG (VK1010) (USED WITH WAFERS: TYPE A, MTC100KT2-1101 TYPE B, MTC100KT2-1102)		1
DA32-R	MTC100YH2-010	.SHELL-RECEPTACLE (VK1010) (USED WITH WAFERS: TYPE A, MTC100KT2-1103 TYPE B, MTC100KT2-1104)		1
		MISSING ITEM NO. NOT APPLICABLE		

– ITEM NOT ILLUSTRATED

IDENT	PART NUMBER	1234567 NOMENCLATURE	EFFECT FROM TO	UNITS PER ASSY
DA33-P	MTC100YH2-009	.SHELL-PLUG (VK1010) (USED WITH WAFERS: TYPE A, MTC100KT2-1101 TYPE B, MTC100KT2-1102)		1
DA33-R	MTC100YH2-010	.SHELL-RECEPTACLE (VK1010) (USED WITH WAFERS: TYPE A, MTC100KT2-1103 TYPE B, MTC100KT2-1104)		1
DA35-P	MTC100YH2-009	.SHELL-PLUG (VK1010) (USED WITH WAFERS: TYPE A, MTC100KT2-1101 TYPE B, MTC100KT2-1102)		1
DA35-R	MTC100YH2-010	.SHELL-RECEPTACLE (VK1010) (USED WITH WAFERS: TYPE A, MTC100KT2-1103 TYPE B, MTC100KT2-1104)		1
DA40-P	MTCR161-04P	.CONNECTOR-PIN (VK1010)		1
DA40-R	MTCR101-04S	.CONNECTOR-SOCKET (VK1010)		1
DA41-P	MTCR161-04P	.CONNECTOR-PIN (VK1010)		1
DA41-R	MTCR101-04S	.CONNECTOR-SOCKET (VK1010)		1
DA42-P	MTC100YH1-003	.SHELL-PLUG (VK1010) (USED WITH WAFERS: TYPE A, MTC100KT1-1101 TYPE B, MTC100KTI-1102)		1
DA42-R	MTC100YH1-004	.SHELL-RECEPTACLE (VK1010) (USED WITH WAFERS: TYPE A, MTC100KT1-1103 TYPE B, MTC100KT1-1104)		1
DA43-P	MTC100YH1-003	.SHELL-PLUG (VK1010) (USED WITH WAFERS: TYPE A, MTC100KT1-1101 TYPE B, MTC100KTI-1102)		1
DA43-R	MTC100YH1-004	.SHELL-RECEPTACLE (VK1010) (USED WITH WAFERS: TYPE A, MTC100KT1-1103 TYPE B, MTC100KT1-1104)		1
		MISSING ITEM NO. NOT APPLICABLE		

– ITEM NOT ILLUSTRATED

IDENT	PART NUMBER	1234567 NOMENCLATURE	EFFECT FROM TO	UNITS PER ASSY
DA46-P	MTC100YH1-003	.SHELL-PLUG (VK1010) (USED WITH WAFERS: TYPE A, MTC100KT1-1101 TYPE B, MTC100KTI-1102)		1
DA46-R	MTC100YH1-004	.SHELL-RECEPTACLE (VK1010) (USED WITH WAFERS: TYPE A, MTC100KT1-1103 TYPE B, MTC100KT1-1104)		1
DA47-P	MTC100YH1-003	.SHELL-PLUG (VK1010) (USED WITH WAFERS: TYPE A, MTC100KT1-1101 TYPE B, MTC100KTI-1102)		1
DA47-R	MTC100YH1-004	.SHELL-RECEPTACLE (VK1010) (USED WITH WAFERS: TYPE A, MTC100KT1-1103 TYPE B, MTC100KT1-1104)		1
DA5-P	MTC100YH2-009	.SHELL-PLUG (VK1010) (USED WITH WAFERS: TYPE A, MTC100KT2-1101 TYPE B, MTC100KT2-1102)		1
DA5-R	MTC100YH2-010	.SHELL-RECEPTACLE (VK1010) (USED WITH WAFERS: TYPE A, MTC100KT2-1103 TYPE B, MTC100KT2-1104)		1
DA6-P	MTC100YH2-009	.SHELL-PLUG (VK1010) (USED WITH WAFERS: TYPE A, MTC100KT2-1101 TYPE B, MTC100KT2-1102)		1
DA6-R	MTC100YH2-010	.SHELL-RECEPTACLE (VK1010) (USED WITH WAFERS: TYPE A, MTC100KT2-1103 TYPE B, MTC100KT2-1104)		1
DA7-P	MTC100YH1-003	.SHELL-PLUG (VK1010) (USED WITH WAFERS: TYPE A, MTC100KT1-1101 DUMMY, MTCX1X100-100)		1
DA7-R	MTC100YH1-004	.SHELL-RECEPTACLE (VK1010) (USED WITH WAFERS: TYPE A, MTC100KT1-1103 DUMMY, MTCX1X100-100)		1
		MISSING ITEM NO. NOT APPLICABLE		

– ITEM NOT ILLUSTRATED

IDENT	PART NUMBER	1234567 NOMENCLATURE	EFFECT FROM TO	UNITS PER ASSY
DC	422254-8	.BUNG- (VK1793)		1
DJ	422255-7	.BUNG- (VK1793)		1
ET-CG	WC1503	.SWITCH- (VK0653)		1
EU-CG	WC1503	.SWITCH- (VK0653)		1
EV-CG	WC1503	.SWITCH- (VK0653)		1
F16-DAC	5920-99-0120074	.FUSE-2AMP (VK0657)		1
F19-DAC	5920-99-0120075	.FUSE-3AMP (VK0657)		1
F21-DAC	5920-99-0120073	.FUSE-1AMP (VK0657)		1
F3-DAC	5920-99-0120075	.FUSE-3AMP (VK0657)		1
F4-DAC	5920-99-0120075	.FUSE-3AMP (VK0657)		1
F5-DAC	5920-99-0120075	.FUSE-3AMP (VK0657)		1
F6-DAC	5920-99-0120075	.FUSE-3AMP (VK0657)		1
G-DR	WC1503	.SWITCH- (VK0653)		1
GA-DAB	M400-1265	.RELAY- (VK6265) (USED WITH SOCKET: M12883-40-19 (V81349))		1
GC-DAB	M400-1265	.RELAY- (VK6265) (USED WITH SOCKET: M12883-40-19 (V81349))		1
GE-DAB	M400-1265	.RELAY- (VK6265) (USED WITH SOCKET: M12883-40-19 (V81349))		1
GG-DAB	M400-1265	.RELAY- (VK6265) (USED WITH SOCKET: M12883-40-19 (V81349))		1
		MISSING ITEM NO. NOT APPLICABLE		

– ITEM NOT ILLUSTRATED

IDENT	PART NUMBER	1234567 NOMENCLATURE	EFFECT FROM TO	UNITS PER ASSY
GJ-DAB	M400-1265	.RELAY- (VK6265) (USED WITH SOCKET: M12883-40-19 (V81349))		1
GL-DAB	M402D4A	.RELAY- (VK6265) (USED WITH SOCKET: M12883-40-24 (V81349))		1
GP-A	104829001	.PUSHER UNIT- (VK0654) (COMPRISING OF: SOLENOID 151606001)		1
GP-B	104829001	.PUSHER UNIT- (VK0654) (COMPRISING OF: SOLENOID 151606001)		1
H-DR	6308-0010A	.MAGNETIC INDICATOR- (VK0653) (OPT BHGD21TL28WBS595 (V07479))		1
HA-DAB	M402D4A	.RELAY- (VK6265) (USED WITH SOCKET: M12883-40-24 (V81349))		1
HC-DAB	M300-1264	.RELAY- (VK6265) (USED WITH SOCKET: M12883-41-16 (V81349))		1
HD-DAB	M300-1264	.RELAY- (VK6265) (USED WITH SOCKET: M12883-41-16 (V81349))		1
HE-DAB	M300-1264	.RELAY- (VK6265) (USED WITH SOCKET: M12883-41-16 (V81349))		1
J-DR	WC1503	.SWITCH- (VK0653)		1
J-WA	72444-030-0AV2	.TERMINAL BLOCK- (VK0574)		1
		MISSING ITEM NO. NOT APPLICABLE		

– ITEM NOT ILLUSTRATED

IDENT	PART NUMBER	1234567 NOMENCLATURE	EFFECT FROM TO	UNITS PER ASSY
JA-DAB	M400-1265	.RELAY- (VK6265) (USED WITH SOCKET: M12883-40-19 (V81349))		1
JBA	72541-030-0AV2	.TERMINAL BLOCK- (VK0574)		1
JC-DAB	M400-1265	.RELAY- (VK6265) (USED WITH SOCKET: M12883-40-19 (V81349))		1
JD	HWBUN1736D5B	.TERMINAL BLOCK- (VK0574)		1
JE-DAB	M400-1265	.RELAY- (VK6265) (USED WITH SOCKET: M12883-40-19 (V81349))		1
JG-DAB	M400-1265	.RELAY- (VK6265) (USED WITH SOCKET: M12883-40-19 (V81349))		1
JHA	21EN108-6	.MICRO SWITCH- (V91929) (OPT (VK6596))		1
JJ-DAB	M400-1265	.RELAY- (VK6265) (USED WITH SOCKET: M12883-40-19 (V81349))		1
JJA	21EN108-6	.MICRO SWITCH- (V91929) (OPT (VK6596))		1
JL-DAB	M402D4A	.RELAY- (VK6265) (USED WITH SOCKET: M12883-40-24 (V81349))		1
K	HWBUN1736D10B	.TERMINAL BLOCK- (VK0574) (OPT 72444-030-0AV2)		1
KA-DAB	M300-1264	.RELAY- (VK6265) (USED WITH SOCKET: M12883-41-16 (V81349))		1
KB	72541-030-0AV2	.TERMINAL BLOCK- (VK0574)		1
		MISSING ITEM NO. NOT APPLICABLE		

– ITEM NOT ILLUSTRATED

IDENT	PART NUMBER	1234567 NOMENCLATURE	EFFECT FROM TO	UNITS PER ASSY
KC-DAB	M300-1264	.RELAY- (VK6265) (USED WITH SOCKET: M12883-41-16 (V81349))		1
KD	HWBUN1736D5B	.TERMINAL BLOCK- (VK0574)		1
KD-DAB	M300-1264	.RELAY- (VK6265) (USED WITH SOCKET: M12883-41-16 (V81349))		1
KE-DAB	M300-1264	.RELAY- (VK6265) (USED WITH SOCKET: M12883-41-16 (V81349))		1
KHA	21EN108-6	.MICRO SWITCH- (V91929) (OPT (VK6596))		1
KJA	21EN108-6	.MICRO SWITCH- (V91929) (OPT (VK6596))		1
L-DR	6308-0010A	.MAGNETIC INDICATOR- (VK0653) (OPT BHGD21TL28WBS595 (V07479))		1
M	BYW54	.DIODE- (VK0004)		1
M2-DAG	MRTB20E04-111	.TERMINAL JUNCTION MODULE- (V14283)		1
N	BYW54	.DIODE- (VK0004)		1
P1-JA-P	BAEREF000003898	.CONNECTOR-SOCKET (6027-24-61PWCONDD (VK1793))		1
P1-JA-R	BAEREF000004313	.CONNECTOR-SOCKET (6027-24-61SWCONDD (VK1793))		1
P2-P	BAEREF000004329	.CONNECTOR-SOCKET (6027-22-41SNCONDD (VK1793))		1
P2-P	BAEREF000004077	.CONNECTOR-PIN (6026-22-41PNCONDD (VK1793))		1
P2-R	BAEREF000004329	.CONNECTOR-SOCKET (6027-22-41SNCONDD (VK1793))		1
		MISSING ITEM NO. NOT APPLICABLE		

– ITEM NOT ILLUSTRATED

IDENT	PART NUMBER	1234567 NOMENCLATURE	EFFECT FROM TO	UNITS PER ASSY
RB	10201	.STALL DETECTOR- (VK0100)	091093 095096 098104	1
RB	10201-1	.STALL DETECTOR- (VK0100)	094094 097097 105110	1
RC-SSU1	C82106-4	.SIGNAL SUMMING UNIT- (V83326) (OPT (V+1245)) (USED WITH: CONNECTOR DPXBNA45333S04 (V71468) (OPT (VK0316)) OUTLET 20745-8 (V71468) (OPT (VK0316)))	092093 095096 098105 107108	1
RC-SSU1	C82106-5	.SIGNAL SUMMING UNIT- (V83326) (OPT (V+1245)) (USED WITH: CONNECTOR DPXBNA45333S04 (V71468) (OPT (VK0316)) OUTLET 20745-8 (V71468) (OPT (VK0316)))	091091 094094 097097 106106 109110	1
RD-SSU2	C82106-4	.SIGNAL SUMMING UNIT- (V83326) (OPT (V+1245)) (USED WITH: CONNECTOR DPXBNA45333S04 (V71468) (OPT (VK0316)) OUTLET 20745-8 (V71468) (OPT (VK0316)))	092093 095096 098105 107108	1
RD-SSU2	C82106-5	.SIGNAL SUMMING UNIT- (V83326) (OPT (V+1245)) (USED WITH: CONNECTOR DPXBNA45333S04 (V71468) (OPT (VK0316)) OUTLET 20745-8 (V71468) (OPT (VK0316)))	091091 094094 097097 106106 109110	1
		MISSING ITEM NO. NOT APPLICABLE		

– ITEM NOT ILLUSTRATED

IDENT	PART NUMBER	1234567 NOMENCLATURE	EFFECT FROM TO	UNITS PER ASSY
RS	B1443-1	.STICKSHAKER- (VK5288)		1
RW	B1443-1	.STICKSHAKER- (VK5288)		1
SC-P	MTC100YH2-009	.SHELL-PLUG (VK1010) (USED WITH WAFERS: TYPE A, MTC100KT2-1103 DUMMY B, MTCX2X200-200)		1
SC-R	MTC100YH2-010	.SHELL-RECEPTACLE (VK1010) (USED WITH WAFERS: TYPE A, MTC100KT2-1101 DUMMY B, MTCX2X200-200)		1
T-CA	HWBUN1736D6B	.TERMINAL BLOCK- (VK0574)		1
T-CD	HWBUN1736D6B	.TERMINAL BLOCK- (VK0574)		1
XC	HWBUN1146S5B	.TERMINAL BLOCK- (VK0574)		1
X1-DAB	MRTB20E57-111	.TERMINAL JUNCTION MODULE- (V14283)		1
X14-DAB	MRTB20E04-111	.TERMINAL JUNCTION MODULE- (V14283)		1
X15-DAB	MRTB20E04-111	.TERMINAL JUNCTION MODULE- (V14283)		1
X2-DAB	MRTB20E04-111	.TERMINAL JUNCTION MODULE- (V14283)		1
X4-DAB	MRTB20E57-111	.TERMINAL JUNCTION MODULE- (V14283)		1
Y10-DAB	MRTB20E03-784	.TERMINAL JUNCTION MODULE- (V14283)		1
Y11-DAB	MRTB20E03-784	.TERMINAL JUNCTION MODULE- (V14283)		1
Y16-DAB	MRTB16E03-111	.TERMINAL JUNCTION MODULE- (V14283)		1
		MISSING ITEM NO. NOT APPLICABLE		

– ITEM NOT ILLUSTRATED

IDENT	PART NUMBER	1234567 NOMENCLATURE	EFFECT FROM TO	UNITS PER ASSY
Z-CA	25-8NF3685-1A	.DIODE BOARD ASSY- (COMPRISING OF: POSITION 33/34 DIODE BYW54 POSITION 35/36 DIODE BYW54 POSITION 37/38 DIODE BYW54 POSITION 39/40 DIODE BYW54 POSITION 41/42 DIODE BYW54 POSITION 43/44 DIODE BYW54 POSITION 47/48 DIODE BYW54 POSITION 49/50 DIODE BYW54 POSITION 51/52 DIODE BYW54 POSITION 53/54 DIODE BYW54 POSITION 55/56 DIODE BYW54 POSTION 57/58 DIODE BYW54 POSITION 59/60 DIODE BYW54 (VK0004))		1
Z-CD	25-8NF3685-1A	.DIODE BOARD ASSY- (COMPRISING OF: POSITIONS 33/34 DIODE BYW54 POSITION 35/36 DIODE BYW54 POSITION 37/38 DIODE BYW54 POSITION 39/40 DIODE BYW54 POSITION 41/42 DIODE BYW54 POSITION 45/46 DIODE BYW54 POSITION 47/48 DIODE BYW54 (VK0004))		1
		MISSING ITEM NO. NOT APPLICABLE		

- ITEM NOT ILLUSTRATED

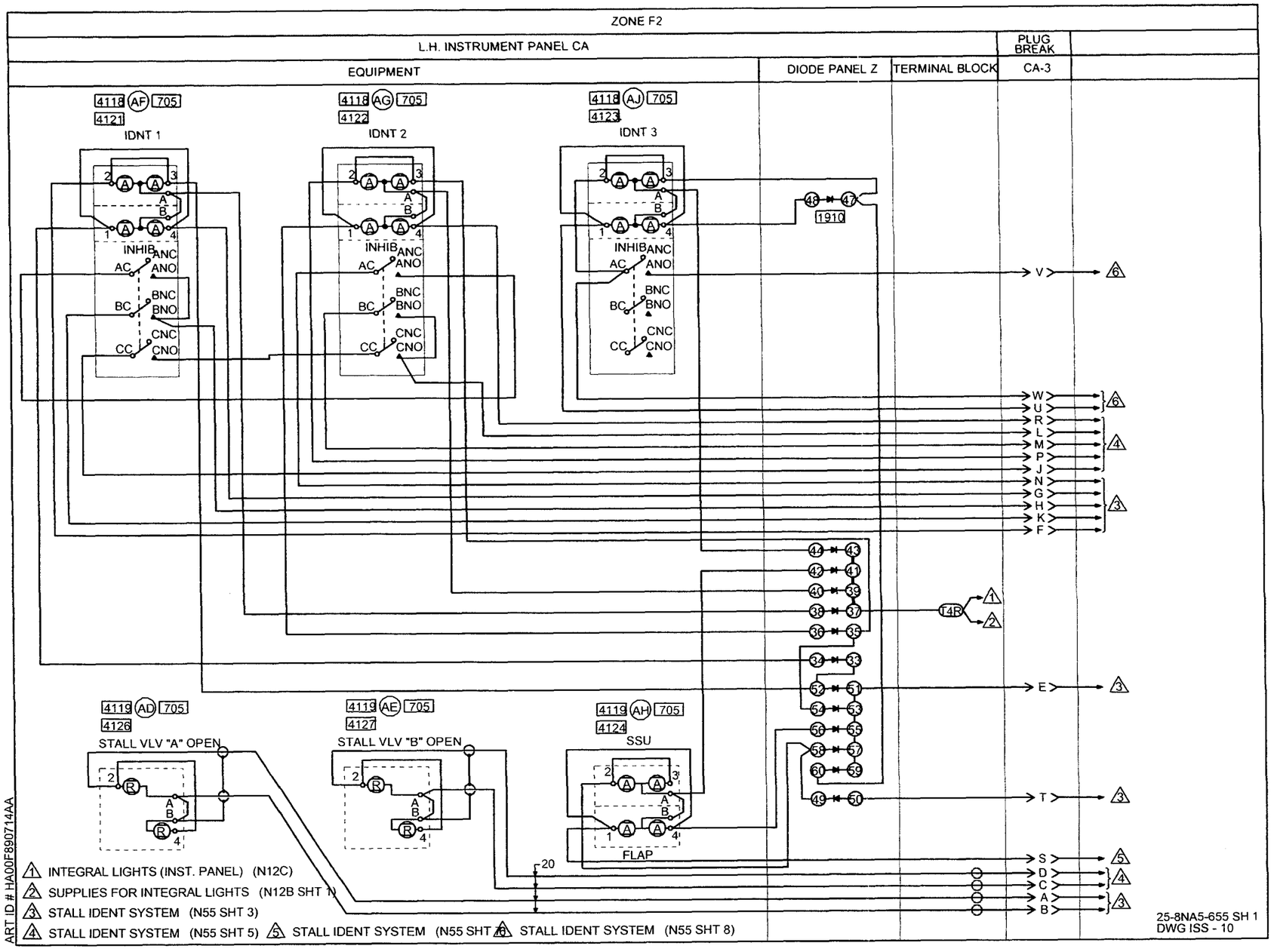
ZONE F2
L.H. INSTRUMENT PANEL CA
PLUG BREAK
EQUIPMENT
DIODE PANEL Z
TERMINAL BLOCK
CA-3
4118 AF 705
4121
IDNT 1
4118 AG 705
4122
IDNT 2
4118 AJ 705
4123
IDNT 3
INHIB
ANC
AC
ANO
BNC
BC
BNO
CNC
CC
CNO
1910
V
W
U
R
L
M
P
J
N
G
H
K
F
E
T
S
D
C
A
B
T4R
4119 AD 705
4126
STALL VLV "A" OPEN
4119 AE 705
4127
STALL VLV "B" OPEN
4119 AH 705
4124
SSU
FLAP
20
1 INTEGRAL LIGHTS (INST. PANEL) (N12C)
2 SUPPLIES FOR INTEGRAL LIGHTS (N12B SHT 1)
3 STALL IDENT SYSTEM (N55 SHT 3)
4 STALL IDENT SYSTEM (N55 SHT 5)
5 STALL IDENT SYSTEM (N55 SHT 7)
6 STALL IDENT SYSTEM (N55 SHT 8)
ART ID # HA00F890714AA
25-8NA5-655 SH 1
DWG ISS - 10

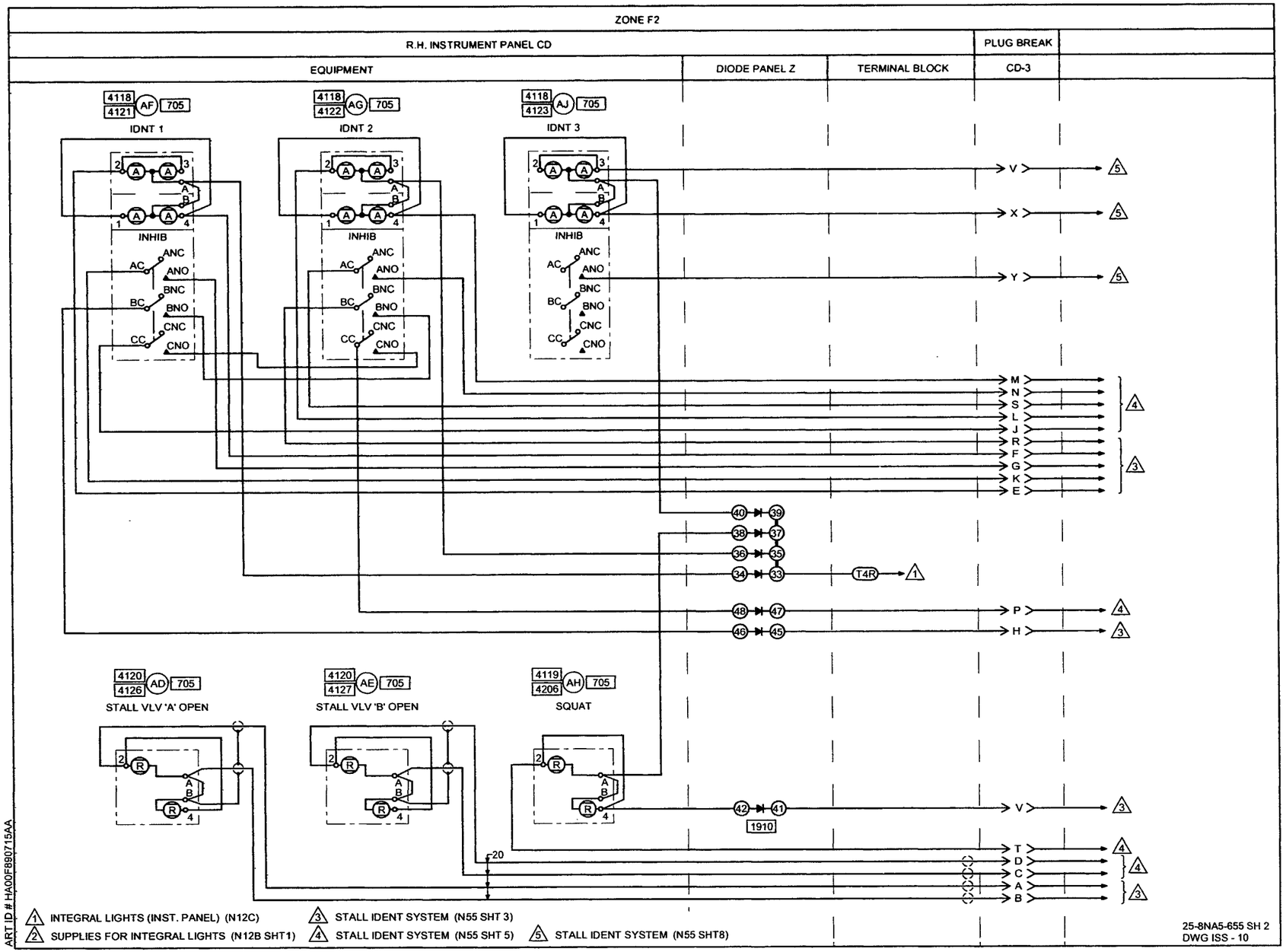
ZONE F2
R.H. INSTRUMENT PANEL CD
PLUG BREAK
EQUIPMENT
DIODE PANEL Z
TERMINAL BLOCK
CD-3
4118 4121 AF 705
IDNT 1
4118 4122 AG 705
IDNT 2
4118 4123 AJ 705
IDNT 3
INHIB
ANC
ANO
BNC
BNO
CNC
CNO
AC
BC
CC
V
X
Y
M
N
S
L
J
R
F
G
K
E
T4R
P
H
4120 4126 AD 705
STALL VLV 'A' OPEN
4120 4127 AE 705
STALL VLV 'B' OPEN
4119 4206 AH 705
SQUAT
1910
T
D
C
A
B
1 INTEGRAL LIGHTS (INST. PANEL) (N12C)
2 SUPPLIES FOR INTEGRAL LIGHTS (N12B SHT1)
3 STALL IDENT SYSTEM (N55 SHT 3)
4 STALL IDENT SYSTEM (N55 SHT 5)
5 STALL IDENT SYSTEM (N55 SHT8)
25-8NA5-655 SH 2
DWG ISS - 10
ART ID # HA00F890715AA

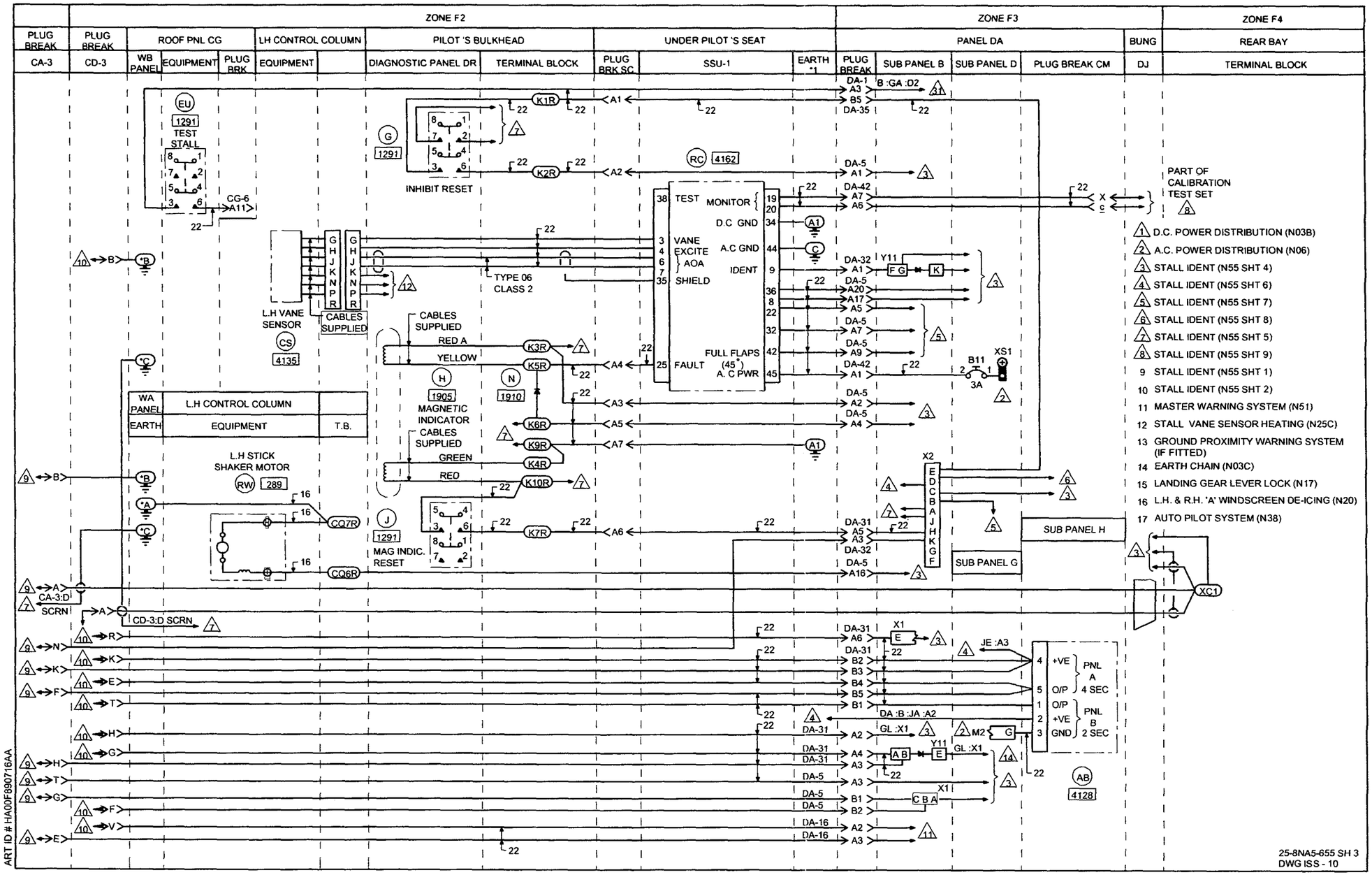
ZONE F2
ZONE F3
ZONE F4
PLUG BREAK
PLUG BREAK
ROOF PNL CG
LH CONTROL COLUMN
PILOT 'S BULKHEAD
UNDER PILOT 'S SEAT
PANEL DA
BUNG
REAR BAY
CA-3
CD-3
WB PANEL
EQUIPMENT
PLUG BRK
EQUIPMENT
DIAGNOSTIC PANEL DR
TERMINAL BLOCK
PLUG BRK SC
SSU-1
EARTH *1
PLUG BREAK
SUB PANEL B
SUB PANEL D
PLUG BREAK CM
DJ
TERMINAL BLOCK
TEST STALL
INHIBIT RESET
TEST
MONITOR
D.C GND
A.C GND
IDENT
VANE EXCITE AOA
SHIELD
FULL FLAPS (45°)
A. C PWR
FAULT
L.H VANE SENSOR
CABLES SUPPLIED
TYPE 06 CLASS 2
RED A
YELLOW
MAGNETIC INDICATOR
GREEN
RED
MAG INDIC. RESET
WA PANEL
L.H CONTROL COLUMN
EARTH
EQUIPMENT
T.B.
L.H STICK SHAKER MOTOR
SUB PANEL H
SUB PANEL G
PART OF CALIBRATION TEST SET
PNL A 4 SEC
PNL B 2 SEC
1 D.C. POWER DISTRIBUTION (N03B)
2 A.C. POWER DISTRIBUTION (N06)
3 STALL IDENT (N55 SHT 4)
4 STALL IDENT (N55 SHT 6)
5 STALL IDENT (N55 SHT 7)
6 STALL IDENT (N55 SHT 8)
7 STALL IDENT (N55 SHT 5)
8 STALL IDENT (N55 SHT 9)
9 STALL IDENT (N55 SHT 1)
10 STALL IDENT (N55 SHT 2)
11 MASTER WARNING SYSTEM (N51)
12 STALL VANE SENSOR HEATING (N25C)
13 GROUND PROXIMITY WARNING SYSTEM (IF FITTED)
14 EARTH CHAIN (N03C)
15 LANDING GEAR LEVER LOCK (N17)
16 L.H. & R.H. 'A' WINDSCREEN DE-ICING (N20)
17 AUTO PILOT SYSTEM (N38)
25-8NA5-655 SH 3
DWG ISS - 10
ART ID # HA00F890716AA

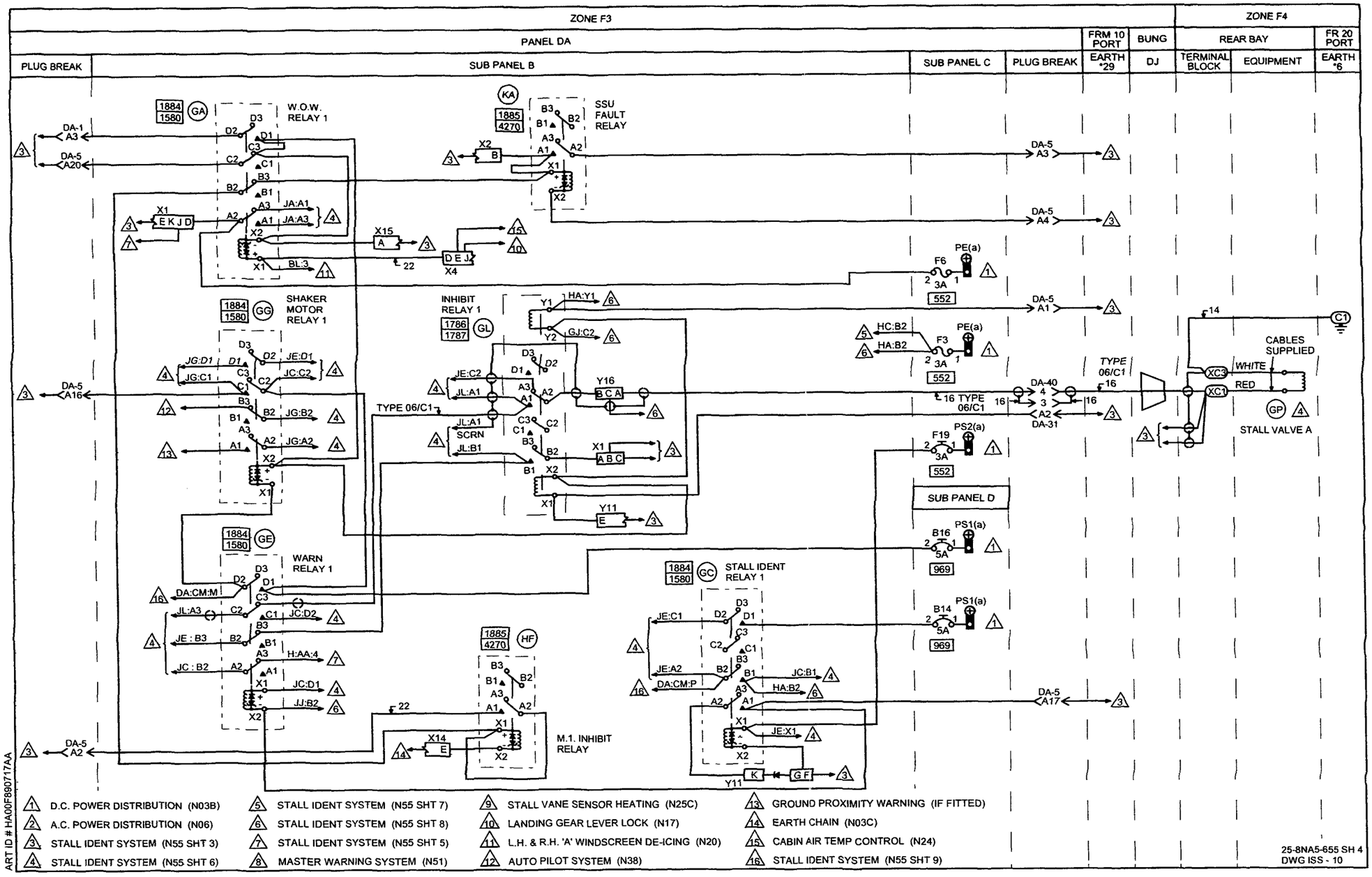
ZONE F3
ZONE F4
PANEL DA
FRM 10 PORT
BUNG
REAR BAY
FR 20 PORT
PLUG BREAK
SUB PANEL B
SUB PANEL C
PLUG BREAK
EARTH *29
DJ
TERMINAL BLOCK
EQUIPMENT
EARTH *6
W.O.W. RELAY 1
SSU FAULT RELAY
SHAKER MOTOR RELAY 1
INHIBIT RELAY 1
WARN RELAY 1
STALL IDENT RELAY 1
M.1. INHIBIT RELAY
SUB PANEL D
CABLES SUPPLIED
STALL VALVE A
TYPE 06/C1
1 D.C. POWER DISTRIBUTION (N03B)
2 A.C. POWER DISTRIBUTION (N06)
3 STALL IDENT SYSTEM (N55 SHT 3)
4 STALL IDENT SYSTEM (N55 SHT 6)
5 STALL IDENT SYSTEM (N55 SHT 7)
6 STALL IDENT SYSTEM (N55 SHT 8)
7 STALL IDENT SYSTEM (N55 SHT 5)
8 MASTER WARNING SYSTEM (N51)
9 STALL VANE SENSOR HEATING (N25C)
10 LANDING GEAR LEVER LOCK (N17)
11 L.H. & R.H. 'A' WINDSCREEN DE-ICING (N20)
12 AUTO PILOT SYSTEM (N38)
13 GROUND PROXIMITY WARNING (IF FITTED)
14 EARTH CHAIN (N03C)
15 CABIN AIR TEMP CONTROL (N24)
16 STALL IDENT SYSTEM (N55 SHT 9)
ART ID # HA00F890717AA
25-8NA5-655 SH 4
DWG ISS - 10

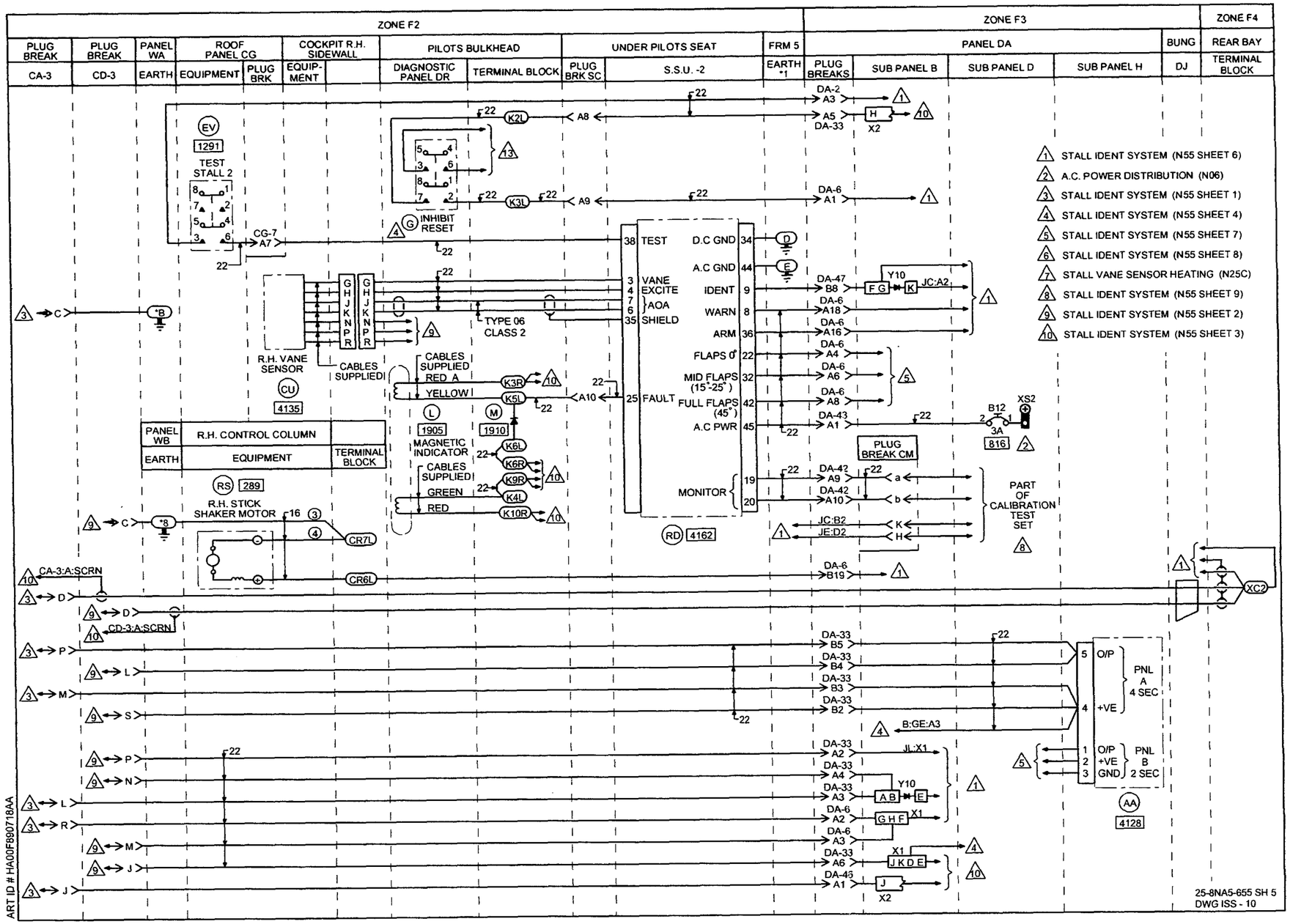
ZONE F2
ZONE F3
ZONE F4
PLUG BREAK CA-3
PLUG BREAK CD-3
PANEL WA EARTH
ROOF PANEL CG EQUIPMENT
PLUG BRK
COCKPIT R.H. SIDEWALL EQUIP-MENT
PILOTS BULKHEAD DIAGNOSTIC PANEL DR
TERMINAL BLOCK
UNDER PILOTS SEAT PLUG BRK SC
S.S.U. -2
FRM 5 EARTH *1
PANEL DA PLUG BREAKS
SUB PANEL B
SUB PANEL D
SUB PANEL H
BUNG DJ
REAR BAY TERMINAL BLOCK
1 STALL IDENT SYSTEM (N55 SHEET 6)
2 A.C. POWER DISTRIBUTION (N06)
3 STALL IDENT SYSTEM (N55 SHEET 1)
4 STALL IDENT SYSTEM (N55 SHEET 4)
5 STALL IDENT SYSTEM (N55 SHEET 7)
6 STALL IDENT SYSTEM (N55 SHEET 8)
7 STALL VANE SENSOR HEATING (N25C)
8 STALL IDENT SYSTEM (N55 SHEET 9)
9 STALL IDENT SYSTEM (N55 SHEET 2)
10 STALL IDENT SYSTEM (N55 SHEET 3)
TEST STALL 2
INHIBIT RESET
R.H. VANE SENSOR
CABLES SUPPLIED
TYPE 06 CLASS 2
CABLES SUPPLIED RED A
YELLOW
MAGNETIC INDICATOR
CABLES SUPPLIED GREEN
RED
R.H. CONTROL COLUMN
EQUIPMENT
TERMINAL BLOCK
R.H. STICK SHAKER MOTOR
TEST
VANE EXCITE
AOA
SHIELD
FAULT
D.C GND
A.C GND
IDENT
WARN
ARM
FLAPS 0°
MID FLAPS (15°-25°)
FULL FLAPS (45°)
A.C PWR
MONITOR
PLUG BREAK CM
PART OF CALIBRATION TEST SET
PNL A 4 SEC
PNL B 2 SEC
O/P
+VE
GND
25-8NA5-655 SH 5
DWG ISS - 10
ART ID # HA00F890718AA

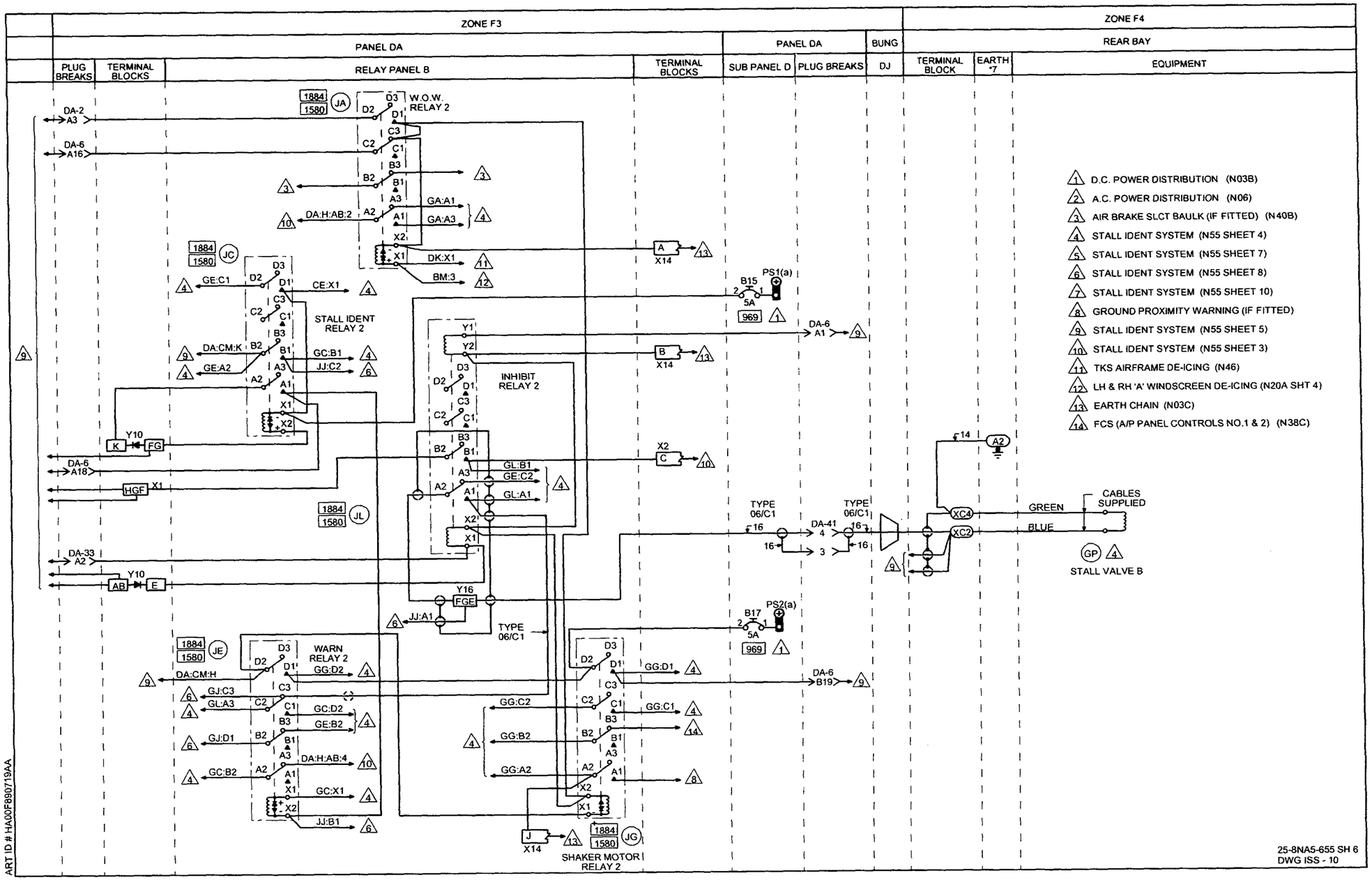
ZONE F3
ZONE F4
PANEL DA
PANEL DA
BUNG
REAR BAY
PLUG BREAKS
TERMINAL BLOCKS
RELAY PANEL B
TERMINAL BLOCKS
SUB PANEL D
PLUG BREAKS
DJ
TERMINAL BLOCK
EARTH *7
EQUIPMENT
W.O.W. RELAY 2
STALL IDENT RELAY 2
INHIBIT RELAY 2
WARN RELAY 2
SHAKER MOTOR RELAY 2
TYPE 06/C1
CABLES SUPPLIED
GREEN
BLUE
STALL VALVE B
1 D.C. POWER DISTRIBUTION (N03B)
2 A.C. POWER DISTRIBUTION (N06)
3 AIR BRAKE SLCT BAULK (IF FITTED) (N40B)
4 STALL IDENT SYSTEM (N55 SHEET 4)
5 STALL IDENT SYSTEM (N55 SHEET 7)
6 STALL IDENT SYSTEM (N55 SHEET 8)
7 STALL IDENT SYSTEM (N55 SHEET 10)
8 GROUND PROXIMITY WARNING (IF FITTED)
9 STALL IDENT SYSTEM (N55 SHEET 5)
10 STALL IDENT SYSTEM (N55 SHEET 3)
11 TKS AIRFRAME DE-ICING (N46)
12 LH & RH 'A' WINDSCREEN DE-ICING (N20A SHT 4)
13 EARTH CHAIN (N03C)
14 FCS (A/P PANEL CONTROLS NO.1 & 2) (N38C)
25-8NA5-655 SH 6
DWG ISS - 10
ART ID # HA00F890719AA

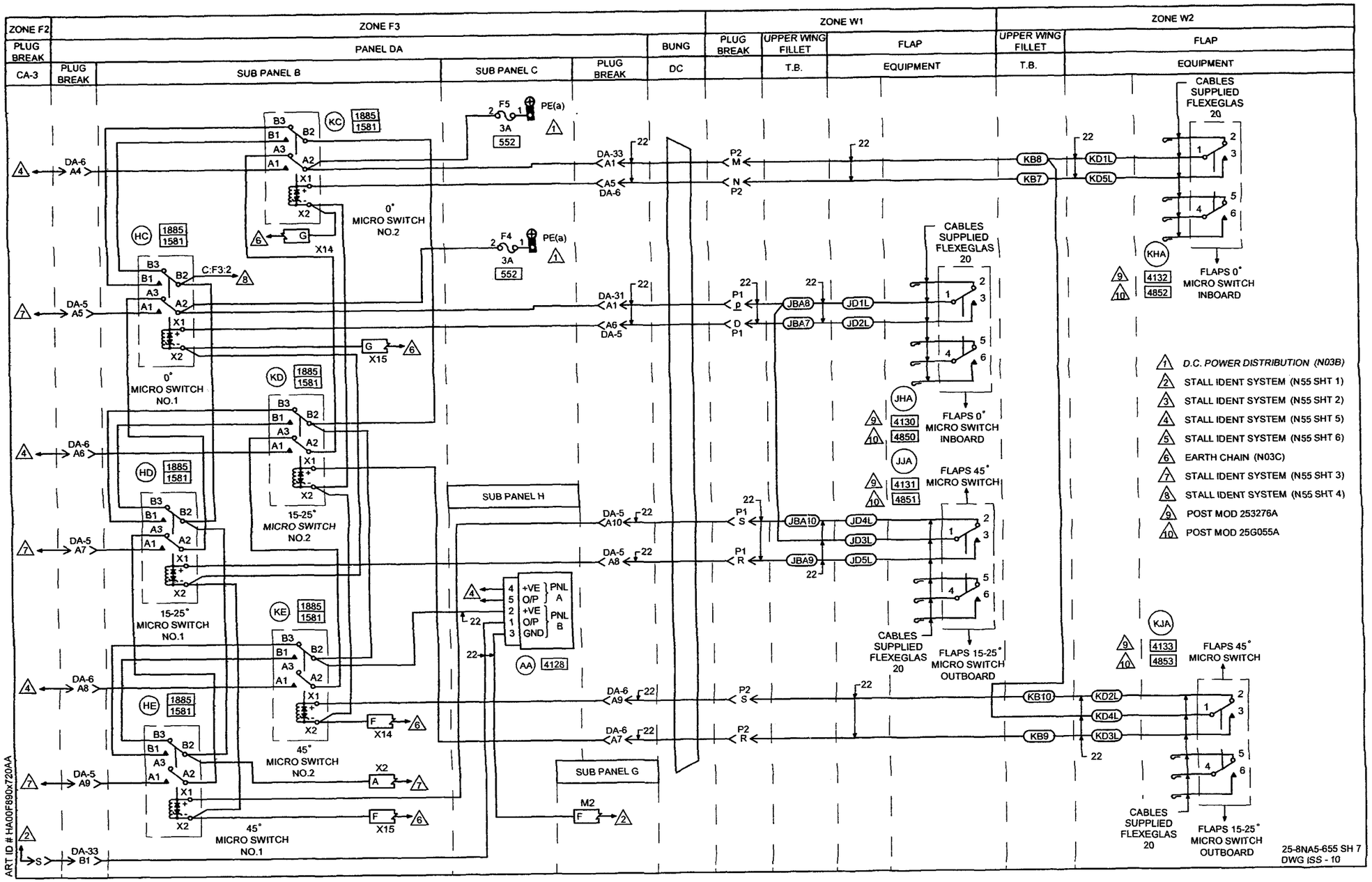
ZONE F2
ZONE F3
ZONE W1
ZONE W2
PLUG BREAK
PANEL DA
BUNG
PLUG BREAK
UPPER WING FILLET
FLAP
UPPER WING FILLET
FLAP
CA-3
PLUG BREAK
SUB PANEL B
SUB PANEL C
PLUG BREAK
DC
T.B.
EQUIPMENT
T.B.
EQUIPMENT
CABLES SUPPLIED FLEXEGLAS 20
0° MICRO SWITCH NO.2
0° MICRO SWITCH NO.1
15-25° MICRO SWITCH NO.2
15-25° MICRO SWITCH NO.1
45° MICRO SWITCH NO.2
45° MICRO SWITCH NO.1
FLAPS 0° MICRO SWITCH INBOARD
FLAPS 45° MICRO SWITCH
FLAPS 15-25° MICRO SWITCH OUTBOARD
SUB PANEL H
SUB PANEL G
+VE O/P
+VE O/P
GND
PNL A
PNL B
D.C. POWER DISTRIBUTION (N03B)
STALL IDENT SYSTEM (N55 SHT 1)
STALL IDENT SYSTEM (N55 SHT 2)
STALL IDENT SYSTEM (N55 SHT 5)
STALL IDENT SYSTEM (N55 SHT 6)
EARTH CHAIN (N03C)
STALL IDENT SYSTEM (N55 SHT 3)
STALL IDENT SYSTEM (N55 SHT 4)
POST MOD 253276A
POST MOD 25G055A
ART ID # HA00F890x720AA
25-8NA5-655 SH 7
DWG ISS - 10

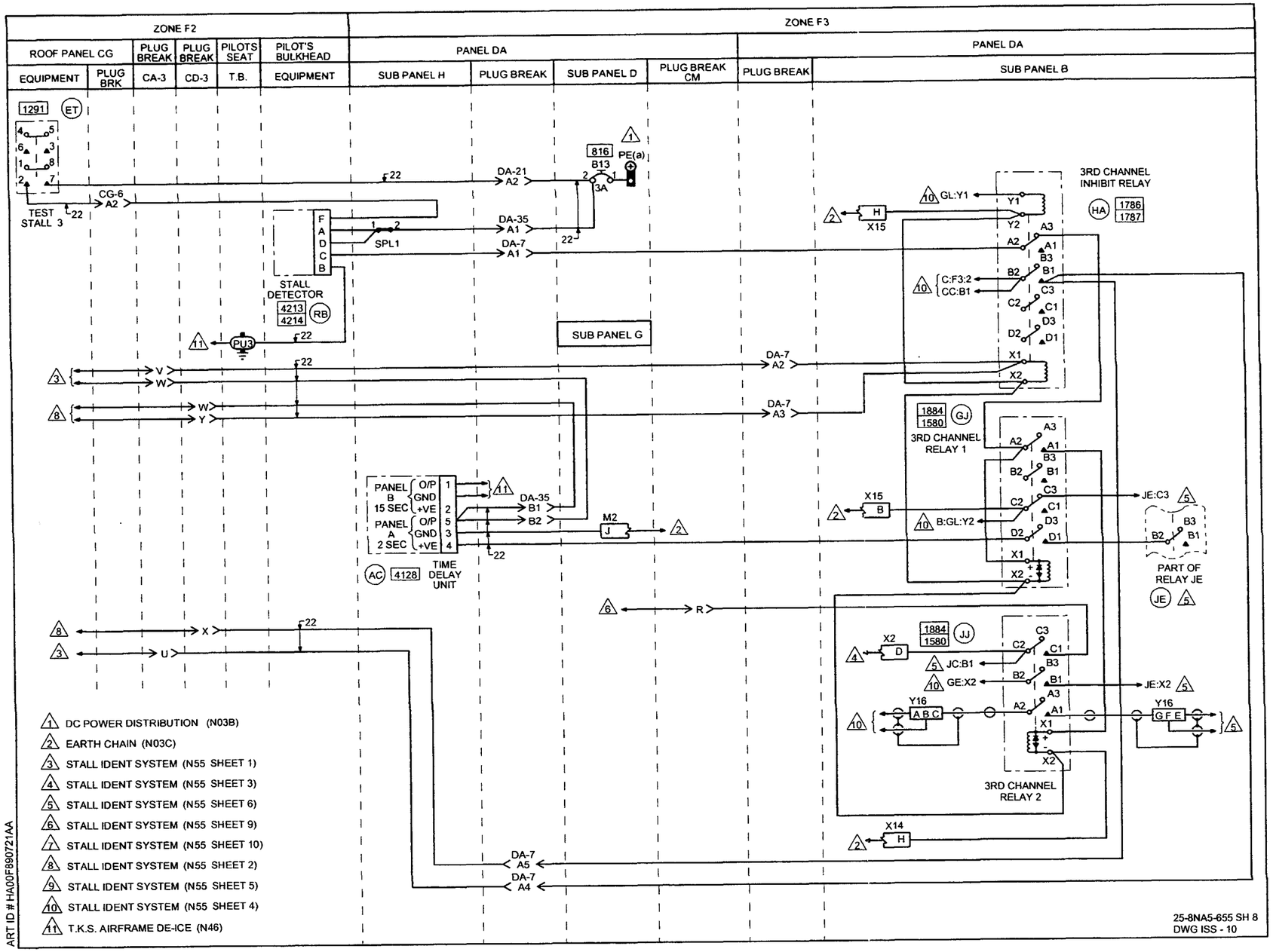
ZONE F2
ZONE F3
ROOF PANEL CG
PLUG BREAK
PLUG BREAK
PILOTS SEAT
PILOT'S BULKHEAD
PANEL DA
PANEL DA
EQUIPMENT
PLUG BRK
CA-3
CD-3
T.B.
EQUIPMENT
SUB PANEL H
PLUG BREAK
SUB PANEL D
PLUG BREAK CM
PLUG BREAK
SUB PANEL B
1291
ET
TEST STALL 3
CG-6
A2
22
DA-21
A2
816
B13
PE(a)
3A
DA-35
A1
SPL1
DA-7
A1
STALL DETECTOR
4213
4214
RB
PU3
SUB PANEL G
DA-7
A2
DA-7
A3
3RD CHANNEL INHIBIT RELAY
HA
1786
1787
GL:Y1
X15
H
C:F3:2
CC:B1
1884
1580
GJ
3RD CHANNEL RELAY 1
B:GL:Y2
JE:C3
PART OF RELAY JE
JE
PANEL B 15 SEC
PANEL A 2 SEC
O/P
GND
+VE
TIME DELAY UNIT
AC
4128
M2
J
JJ
JC:B1
GE:X2
JE:X2
Y16
A B C
G F E
3RD CHANNEL RELAY 2
X14
DA-7
A5
DA-7
A4
1 DC POWER DISTRIBUTION (N03B)
2 EARTH CHAIN (N03C)
3 STALL IDENT SYSTEM (N55 SHEET 1)
4 STALL IDENT SYSTEM (N55 SHEET 3)
5 STALL IDENT SYSTEM (N55 SHEET 6)
6 STALL IDENT SYSTEM (N55 SHEET 9)
7 STALL IDENT SYSTEM (N55 SHEET 10)
8 STALL IDENT SYSTEM (N55 SHEET 2)
9 STALL IDENT SYSTEM (N55 SHEET 5)
10 STALL IDENT SYSTEM (N55 SHEET 4)
11 T.K.S. AIRFRAME DE-ICE (N46)
ART ID # HA00F890721AA
25-8NA5-655 SH 8
DWG ISS - 10

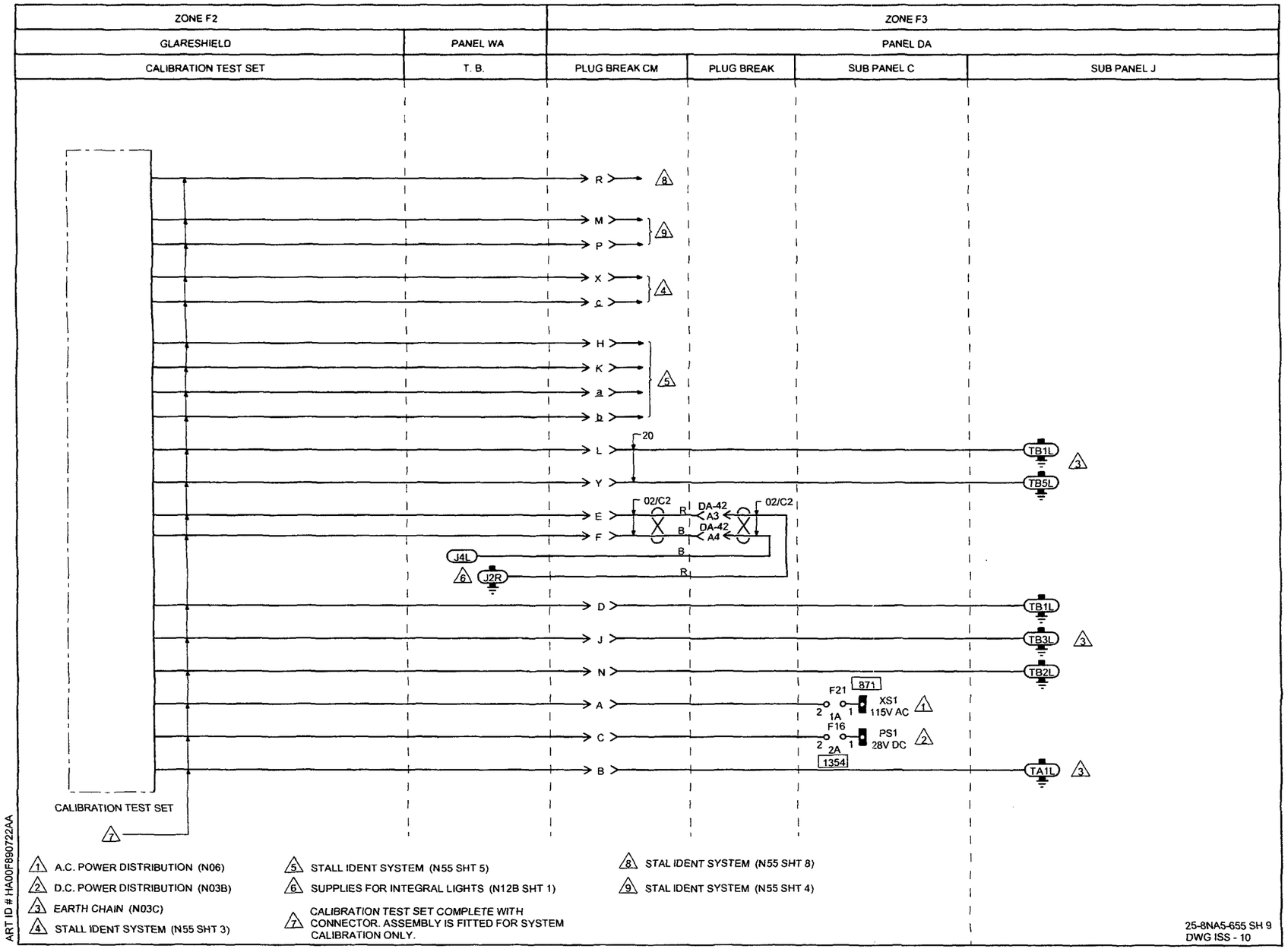
ZONE F2
ZONE F3
GLARESHIELD
PANEL WA
PANEL DA
CALIBRATION TEST SET
T. B.
PLUG BREAK CM
PLUG BREAK
SUB PANEL C
SUB PANEL J
R
M
P
X
c
H
K
a
b
L
Y
E
F
D
J
N
A
C
B
20
02/C2
DA-42 A3
DA-42 A4
J4L
J2R
TB1L
TB5L
TB3L
TB2L
TA1L
F21
871
XS1
115V AC
1A
F16
PS1
28V DC
2A
1354
CALIBRATION TEST SET
1 A.C. POWER DISTRIBUTION (N06)
2 D.C. POWER DISTRIBUTION (N03B)
3 EARTH CHAIN (N03C)
4 STALL IDENT SYSTEM (N55 SHT 3)
5 STALL IDENT SYSTEM (N55 SHT 5)
6 SUPPLIES FOR INTEGRAL LIGHTS (N12B SHT 1)
7 CALIBRATION TEST SET COMPLETE WITH CONNECTOR. ASSEMBLY IS FITTED FOR SYSTEM CALIBRATION ONLY.
8 STAL IDENT SYSTEM (N55 SHT 8)
9 STAL IDENT SYSTEM (N55 SHT 4)
ART ID # HA00F890722AA
25-8NA5-655 SH 9
DWG ISS - 10

	IDENT	PART NUMBER	1234567 NOMENCLATURE	EFFECT FROM TO	UNITS PER ASSY
			STALL IDENT SYSTEM	111232 234234 236236 238276	
R R R R R		25-8NA5-655	WIRING DIAGRAM- (MOD 253192A) (MOD 25F505A) (PRE MOD 25A600A) (PRE MOD 25F968A)		RF
	AA-DAH	25-8NF977-1A	.TIME DELAY UNIT		1
	AB-DAH	25-8NF977-3A	.TIME DELAY UNIT		1
	AC-DAH	25-8NF977-5A	.TIME DELAY UNIT		1
	AD-CA	99-930	.INDICATOR LAMP- (V32245)		1
	AD-CD	99-930	.INDICATOR LAMP- (V32245)		1
	AE-CA	99-930	.INDICATOR LAMP- (V32245)		1
	AE-CD	99-930	.INDICATOR LAMP- (V32245)		1
	AF-CA	99-913	.LAMP SWITCH MODULE- (V32245)		1
	AF-CD	99-913	.LAMP SWITCH MODULE- (V32245)		1
	AG-CA	99-913	.LAMP SWITCH MODULE- (V32245)		1
	AG-CD	99-913	.LAMP SWITCH MODULE- (V32245)		1
	AH-CA	99-930	.INDICATOR LAMP- (V32245)		1
	AH-CD	99-930	.INDICATOR LAMP- (V32245)		1
	AJ-CA	99-913	.LAMP SWITCH MODULE- (V32245)		1
	AJ-CD	99-913	.LAMP SWITCH MODULE- (V32245)		1
	B11-DAD	483TCG11J85-3A	.CIRCUIT BREAKER-3AMP (VU0091)		1
	B12-DAD	483TCG11J85-3A	.CIRCUIT BREAKER-3AMP (VU0091)		1
	B13-DAD	483TCG11J85-3A	.CIRCUIT BREAKER-3AMP (VU0091)		1
	B14-DAD	483TCG11J85-5A	.CIRCUIT BREAKER-5AMP (VU0091)		1
	B15-DAD	483TCG11J85-5A	.CIRCUIT BREAKER-5AMP (VU0091)		1
	B16-DAD	483TCG11J85-5A	.CIRCUIT BREAKER-5AMP (VU0091)		1
	B17-DAD	483TCG11J85-5A	.CIRCUIT BREAKER-5AMP (VU0091)		1
			MISSING ITEM NO. NOT APPLICABLE		

– ITEM NOT ILLUSTRATED

IDENT	PART NUMBER	1234567 NOMENCLATURE	EFFECT FROM TO	UNITS PER ASSY
CA3-P	BAEREF000003457	.CONNECTOR-PIN (6027-16-26PNCONDC (VK1793))		1
CA3-R	BAEREF000003427	.CONNECTOR-SOCKET (6026-16-26SNCONDD (VK1793))		1
CD3-P	BAEREF000003457	.CONNECTOR-PIN (6027-16-26PNCONDC (VK1793))		1
CD3-R	BAEREF000003427	.CONNECTOR-SOCKET (6026-16-26SNCONDD (VK1793))		1
CG6-P	MTC100YH2-009	.SHELL-PLUG (VK1010) (USED WITH WAFERS: TYPE A, MTC100KT2-1101 TYPE B, MTC100KT2-1102)	111232 234234 236236 238254	1
CG6-P	MTC100YH2-009	.SHELL-PLUG (VK1010) (USED WITH INSERTS: PRIMARY MTC100YC1-001 SECONDARY MTC100YC1-002)	255276	1
CG6-R	MTC100YH2-010	.SHELL-RECEPTACLE (VK1010) (USED WITH WAFERS: TYPE A, MTC100KT2-1103 TYPE B, MTC100KT2-1104)	111232 234234 236236 238254	1
CG6-R	MTC100YH2-010	.SHELL-RECEPTACLE (VK1010) (USED WITH INSERTS: PRIMARY MTC100YC1-003 SECONDARY MTC100YC1-004)	255276	1
CG7-P	MTC100YH2-009	.SHELL-PLUG (VK1010) (USED WITH WAFERS: TYPE A, MTC100KT2-1101 TYPE B, MTC100KT2-1102)	111232 234234 236236 238254	1
CG7-P	MTC100YH2-009	.SHELL-PLUG (VK1010) (USED WITH INSERTS: PRIMARY MTC100YC1-001 SECONDARY MTC100YC1-002)	255276	1
CG7-R	MTC100YH2-010	.SHELL-RECEPTACLE (VK1010) (USED WITH WAFERS: TYPE A, MTC100KT2-1103 TYPE B, MTC100KT2-1104)	111232 234234 236236 238254	1

MISSING ITEM NO. NOT APPLICABLE

– ITEM NOT ILLUSTRATED

IDENT	PART NUMBER	1234567 NOMENCLATURE	EFFECT FROM TO	UNITS PER ASSY
CG7-R	MTC100YH2-010	.SHELL-RECEPTACLE (VK1010) (USED WITH INSERTS: PRIMARY MTC100YC1-003 SECONDARY MTC100YC1-004)	255276	1
CM-R	MS3470L16-26SN	.CONNECTOR-SOCKET (V96906) (USED WITH OUTLET: MS3154-16)		1
CQ	HWBUN1146D10B	.TERMINAL BLOCK- (VK0574)		1
CR	HWBUN1146D10B	.TERMINAL BLOCK- (VK0574)		1
CS-LH	1703-12	.SENSOR- (V83326)	111232 234234 236236 238276	1
CS-RH	1703-12	.SENSOR- (V83326)	111232 234234 236236 238276	1
DA1-P	MTC100YH1-003	.SHELL-PLUG (VK1010) (USED WITH WAFERS: TYPE A, MTC100KT1-1101 TYPE B, MTC100KTI-1102)	111232 234234 236236 238254	1
DA1-P	MTC100YH1-003	.SHELL-PLUG (VK1010) (USED WITH INSERT: MTC100YC1-005)	255276	1
DA1-R	MTC100YH1-004	.SHELL-RECEPTACLE (VK1010) (USED WITH WAFERS: TYPE A, MTC100KT1-1103 TYPE B, MTC100KT1-1104)	111232 234234 236236 238254	1
DA1-R	MTC100YH1-004	.SHELL-RECEPTACLE (VK1010) (USED WITH INSERT: MTC100YC1-006)	255276	1
DA16-P	MTC100YH1-003	.SHELL-PLUG (VK1010) (USED WITH WAFERS: TYPE A, MTC100KT1-1101 TYPE B, MTC100KTI-1102)	111232 234234 236236 238254	1
DA16-P	MTC100YH1-003	.SHELL-PLUG (VK1010) (USED WITH INSERT: MTC100YC1-005)	255276	1
		MISSING ITEM NO. NOT APPLICABLE		

– ITEM NOT ILLUSTRATED

IDENT	PART NUMBER	1234567 NOMENCLATURE	EFFECT FROM TO	UNITS PER ASSY
DA16-R	MTC100YH1-004	.SHELL-RECEPTACLE (VK1010) (USED WITH WAFERS: TYPE A, MTC100KT1-1103 TYPE B, MTC100KT1-1104)	111232 234234 236236 238254	1
DA16-R	MTC100YH1-004	.SHELL-RECEPTACLE (VK1010) (USED WITH INSERT: MTC100YC1-006)	255276	1
DA2-P	MTC100YH1-003	.SHELL-PLUG (VK1010) (USED WITH WAFERS: TYPE A, MTC100KT1-1101 TYPE B, MTC100KTI-1102)	111232 234234 236236 238254	1
DA2-P	MTC100YH1-003	.SHELL-PLUG (VK1010) (USED WITH INSERT: MTC100YC1-005)	255276	1
DA2-R	MTC100YH1-004	.SHELL-RECEPTACLE (VK1010) (USED WITH WAFERS: TYPE A, MTC100KT1-1103 TYPE B, MTC100KT1-1104)	111232 234234 236236 238254	1
DA2-R	MTC100YH1-004	.SHELL-RECEPTACLE (VK1010) (USED WITH INSERT: MTC100YC1-006)	255276	1
DA21-P	MTC100YH2-009	.SHELL-PLUG (VK1010) (USED WITH WAFERS: TYPE A, MTC100KT2-1101 TYPE B, MTC100KT2-1102)	111232 234234 236236 238254	1
DA21-P	MTC100YH2-009	.SHELL-PLUG (VK1010) (USED WITH INSERTS: PRIMARY MTC100YC1-001 SECONDARY MTC100YC1-002)	255276	1
DA21-R	MTC100YH2-010	.SHELL-RECEPTACLE (VK1010) (USED WITH WAFERS: TYPE A, MTC100KT2-1103 TYPE B, MTC100KT2-1104)	111232 234234 236236 238254	1
DA21-R	MTC100YH2-010	.SHELL-RECEPTACLE (VK1010) (USED WITH INSERTS: PRIMARY MTC100YC1-003 SECONDARY MTC100YC1-004)	255276	1

MISSING ITEM NO. NOT APPLICABLE

– ITEM NOT ILLUSTRATED

IDENT	PART NUMBER	1234567 NOMENCLATURE	EFFECT FROM TO	UNITS PER ASSY
DA31-P	MTC100YH2-009	.SHELL-PLUG (VK1010) (USED WITH WAFERS: TYPE A, MTC100KT2-1101 TYPE B, MTC100KT2-1102)	111232 234234 236236 238254	1
DA31-P	MTC100YH2-009	.SHELL-PLUG (VK1010) (USED WITH INSERTS: PRIMARY MTC100YC1-001 SECONDARY MTC100YC1-002)	255276	1
DA31-R	MTC100YH2-010	.SHELL-RECEPTACLE (VK1010) (USED WITH WAFERS: TYPE A, MTC100KT2-1103 TYPE B, MTC100KT2-1104)	111232 234234 236236 238254	1
DA31-R	MTC100YH2-010	.SHELL-RECEPTACLE (VK1010) (USED WITH INSERTS: PRIMARY MTC100YC1-003 SECONDARY MTC100YC1-004)	255276	1
DA32-P	MTC100YH2-009	.SHELL-PLUG (VK1010) (USED WITH WAFERS: TYPE A, MTC100KT2-1101 TYPE B, MTC100KT2-1102)	111232 234234 236236 238254	1
DA32-P	MTC100YH2-009	.SHELL-PLUG (VK1010) (USED WITH INSERTS: PRIMARY MTC100YC1-001 SECONDARY MTC100YC1-002)	255276	1
DA32-R	MTC100YH2-010	.SHELL-RECEPTACLE (VK1010) (USED WITH WAFERS: TYPE A, MTC100KT2-1103 TYPE B, MTC100KT2-1104)	111232 234234 236236 238254	1
DA32-R	MTC100YH2-010	.SHELL-RECEPTACLE (VK1010) (USED WITH INSERTS: PRIMARY MTC100YC1-003 SECONDARY MTC100YC1-004)	255276	1
DA33-P	MTC100YH2-009	.SHELL-PLUG (VK1010) (USED WITH WAFERS: TYPE A, MTC100KT2-1101 TYPE B, MTC100KT2-1102)	111232 234234 236236 238254	1
DA33-P	MTC100YH2-009	.SHELL-PLUG (VK1010) (USED WITH INSERTS: PRIMARY MTC100YC1-001 SECONDARY MTC100YC1-002)	255276	1
		MISSING ITEM NO. NOT APPLICABLE		

– ITEM NOT ILLUSTRATED

IDENT	PART NUMBER	1234567 NOMENCLATURE	EFFECT FROM TO	UNITS PER ASSY
DA33-R	MTC100YH2-010	.SHELL-RECEPTACLE (VK1010) (USED WITH WAFERS: TYPE A, MTC100KT2-1103 TYPE B, MTC100KT2-1104)	111232 234234 236236 238254	1
DA33-R	MTC100YH2-010	.SHELL-RECEPTACLE (VK1010) (USED WITH INSERTS: PRIMARY MTC100YC1-003 SECONDARY MTC100YC1-004)	255276	1
DA35-P	MTC100YH2-009	.SHELL-PLUG (VK1010) (USED WITH WAFERS: TYPE A, MTC100KT2-1101 TYPE B, MTC100KT2-1102)	111232 234234 236236 238254	1
DA35-P	MTC100YH2-009	.SHELL-PLUG (VK1010) (USED WITH INSERTS: PRIMARY MTC100YC1-001 SECONDARY MTC100YC1-002)	255276	1
DA35-R	MTC100YH2-010	.SHELL-RECEPTACLE (VK1010) (USED WITH WAFERS: TYPE A, MTC100KT2-1103 TYPE B, MTC100KT2-1104)	111232 234234 236236 238254	1
DA35-R	MTC100YH2-010	.SHELL-RECEPTACLE (VK1010) (USED WITH INSERTS: PRIMARY MTC100YC1-003 SECONDARY MTC100YC1-004)	255276	1
DA40-P	MTCR161-04P	.CONNECTOR-PIN (VK1010)		1
DA40-R	MTCR101-04S	.CONNECTOR-SOCKET (VK1010)		1
DA41-P	MTCR161-04P	.CONNECTOR-PIN (VK1010)		1
DA41-R	MTCR101-04S	.CONNECTOR-SOCKET (VK1010)		1
DA42-P	MTC100YH1-003	.SHELL-PLUG (VK1010) (USED WITH WAFERS: TYPE A, MTC100KT1-1101 TYPE B, MTC100KTI-1102)	111232 234234 236236 238254	1
DA42-P	MTC100YH1-003	.SHELL-PLUG (VK1010) (USED WITH INSERT: MTC100YC1-005)	255276	1

MISSING ITEM NO. NOT APPLICABLE

— ITEM NOT ILLUSTRATED

IDENT	PART NUMBER	1234567 NOMENCLATURE	EFFECT FROM TO	UNITS PER ASSY
DA42-R	MTC100YH1-004	.SHELL-RECEPTACLE (VK1010) (USED WITH WAFERS: TYPE A, MTC100KT1-1103 TYPE B, MTC100KT1-1104)	111232 234234 236236 238254	1
DA42-R	MTC100YH1-004	.SHELL-RECEPTACLE (VK1010) (USED WITH INSERT: MTC100YC1-006)	255276	1
DA43-P	MTC100YH1-003	.SHELL-PLUG (VK1010) (USED WITH WAFERS: TYPE A, MTC100KT1-1101 TYPE B, MTC100KTI-1102)	111232 234234 236236 238254	1
DA43-P	MTC100YH1-003	.SHELL-PLUG (VK1010) (USED WITH INSERT: MTC100YC1-005)	255276	1
DA43-R	MTC100YH1-004	.SHELL-RECEPTACLE (VK1010) (USED WITH WAFERS: TYPE A, MTC100KT1-1103 TYPE B, MTC100KT1-1104)	111232 234234 236236 238254	1
DA43-R	MTC100YH1-004	.SHELL-RECEPTACLE (VK1010) (USED WITH INSERT: MTC100YC1-006)	255276	1
DA46-P	MTC100YH1-003	.SHELL-PLUG (VK1010) (USED WITH WAFERS: TYPE A, MTC100KT1-1101 TYPE B, MTC100KTI-1102)	111232 234234 236236 238254	1
DA46-P	MTC100YH1-003	.SHELL-PLUG (VK1010) (USED WITH INSERT: MTC100YC1-005)	255276	1
DA46-R	MTC100YH1-004	.SHELL-RECEPTACLE (VK1010) (USED WITH WAFERS: TYPE A, MTC100KT1-1103 TYPE B, MTC100KT1-1104)	111232 234234 236236 238254	1
DA46-R	MTC100YH1-004	.SHELL-RECEPTACLE (VK1010) (USED WITH INSERT: MTC100YC1-006)	255276	1
DA47-P	MTC100YH1-003	.SHELL-PLUG (VK1010) (USED WITH WAFERS: TYPE A, MTC100KT1-1101 TYPE B, MTC100KTI-1102)	111232 234234 236236 238254	1
		MISSING ITEM NO. NOT APPLICABLE		

— ITEM NOT ILLUSTRATED

IDENT	PART NUMBER	1234567 NOMENCLATURE	EFFECT FROM TO	UNITS PER ASSY
DA47-P	MTC100YH1-003	.SHELL-PLUG (VK1010) (USED WITH INSERT: MTC100YC1-005)	255276	1
DA47-R	MTC100YH1-004	.SHELL-RECEPTACLE (VK1010) (USED WITH WAFERS: TYPE A, MTC100KT1-1103 TYPE B, MTC100KT1-1104)	111232 234234 236236 238254	1
DA47-R	MTC100YH1-004	.SHELL-RECEPTACLE (VK1010) (USED WITH INSERT: MTC100YC1-006)	255276	1
DA5-P	MTC100YH2-009	.SHELL-PLUG (VK1010) (USED WITH WAFERS: TYPE A, MTC100KT2-1101 TYPE B, MTC100KT2-1102)	111232 234234 236236 238254	1
DA5-P	MTC100YH2-009	.SHELL-PLUG (VK1010) (USED WITH INSERTS: PRIMARY MTC100YC1-001 SECONDARY MTC100YC1-002)	255276	1
DA5-R	MTC100YH2-010	.SHELL-RECEPTACLE (VK1010) (USED WITH WAFERS: TYPE A, MTC100KT2-1103 TYPE B, MTC100KT2-1104)	111232 234234 236236 238254	1
DA5-R	MTC100YH2-010	.SHELL-RECEPTACLE (VK1010) (USED WITH INSERTS: PRIMARY MTC100YC1-003 SECONDARY MTC100YC1-004)	255276	1
DA6-P	MTC100YH2-009	.SHELL-PLUG (VK1010) (USED WITH WAFERS: TYPE A, MTC100KT2-1101 TYPE B, MTC100KT2-1102)	111232 234234 236236 238254	1
DA6-P	MTC100YH2-009	.SHELL-PLUG (VK1010) (USED WITH INSERTS: PRIMARY MTC100YC1-001 SECONDARY MTC100YC1-002)	255276	1
DA6-R	MTC100YH2-010	.SHELL-RECEPTACLE (VK1010) (USED WITH WAFERS: TYPE A, MTC100KT2-1103 TYPE B, MTC100KT2-1104)	111232 234234 236236 238254	1

MISSING ITEM NO. NOT APPLICABLE

- ITEM NOT ILLUSTRATED

IDENT	PART NUMBER	1234567 NOMENCLATURE	EFFECT FROM TO	UNITS PER ASSY
DA6-R	MTC100YH2-010	.SHELL-RECEPTACLE (VK1010) (USED WITH INSERTS: PRIMARY MTC100YC1-003 SECONDARY MTC100YC1-004)	255276	1
DA7-P	MTC100YH1-003	.SHELL-PLUG (VK1010) (USED WITH WAFERS: TYPE A, MTC100KT1-1101 DUMMY, MTCX1X100-100)	111232 234234 236236 238254	1
DA7-P	MTC100YH1-003	.SHELL-PLUG (VK1010) (USED WITH INSERT: MTC100YC1-005)	255276	1
DA7-R	MTC100YH1-004	.SHELL-RECEPTACLE (VK1010) (USED WITH WAFERS: TYPE A, MTC100KT1-1103 DUMMY, MTCX1X100-100)	111232 234234 236236 238254	1
DA7-R	MTC100YH1-004	.SHELL-RECEPTACLE (VK1010) (USED WITH INSERT: MTC100YC1-006)	255276	1
DC	422254-8	.BUNG- (VK1793)		1
DJ	422255-7	.BUNG- (VK1793)		1
ET-CG	WC1503	.SWITCH- (VK0653)		1
EU-CG	WC1503	.SWITCH- (VK0653)		1
EV-CG	WC1503	.SWITCH- (VK0653)		1
F16-DAC	5920-99-0120074	.FUSE-2AMP (VK0657)		1
F19-DAC	5920-99-0120075	.FUSE-3AMP (VK0657)		1
F21-DAC	5920-99-0120073	.FUSE-1AMP (VK0657)		1
F3-DAC	5920-99-0120075	.FUSE-3AMP (VK0657)		1
F4-DAC	5920-99-0120075	.FUSE-3AMP (VK0657)		1
F5-DAC	5920-99-0120075	.FUSE-3AMP (VK0657)		1
F6-DAC	5920-99-0120075	.FUSE-3AMP (VK0657)		1
G-DR	WC1503	.SWITCH- (VK0653)		1
		MISSING ITEM NO. NOT APPLICABLE		

– ITEM NOT ILLUSTRATED

IDENT	PART NUMBER	1234567 NOMENCLATURE	EFFECT FROM TO	UNITS PER ASSY
GA-DAB	M400-1265	.RELAY- (VK6265) (USED WITH SOCKET: M12883-40-19 (V81349))		1
GC-DAB	M400-1265	.RELAY- (VK6265) (USED WITH SOCKET: M12883-40-19 (V81349))		1
GE-DAB	M400-1265	.RELAY- (VK6265) (USED WITH SOCKET: M12883-40-19 (V81349))		1
GG-DAB	M400-1265	.RELAY- (VK6265) (USED WITH SOCKET: M12883-40-19 (V81349))		1
GJ-DAB	M400-1265	.RELAY- (VK6265) (USED WITH SOCKET: M12883-40-19 (V81349))		1
GL-DAB	M402D4A	.RELAY- (VK6265) (USED WITH SOCKET: M12883-40-24 (V81349))		1
GP-A	104829001	.PUSHER UNIT- (VK0654) (COMPRISING OF: SOLENOID 151606001)		1
GP-B	104829001	.PUSHER UNIT- (VK0654) (COMPRISING OF: SOLENOID 151606001)		1
H-DR	6308-0010A	.MAGNETIC INDICATOR- (VK0653) (OPT BHGD21TL28WBS595 (V07479))		1
HA-DAB	M402D4A	.RELAY- (VK6265) (USED WITH SOCKET: M12883-40-24 (V81349))		1
		MISSING ITEM NO. NOT APPLICABLE		

– ITEM NOT ILLUSTRATED

	IDENT	PART NUMBER	1234567 NOMENCLATURE	EFFECT FROM TO	UNITS PER ASSY
	HC-DAB	M300-1264	.RELAY- (VK6265) (USED WITH SOCKET: M12883-41-16 (V81349))		1
	HD-DAB	M300-1264	.RELAY- (VK6265) (USED WITH SOCKET: M12883-41-16 (V81349))		1
	HE-DAB	M300-1264	.RELAY- (VK6265) (USED WITH SOCKET: M12883-41-16 (V81349))		1
	J-DR	WC1503	.SWITCH- (VK0653)		1
	J-WA	72444-030-0AV2	.TERMINAL BLOCK- (VK0574)		1
	JA-DAB	M400-1265	.RELAY- (VK6265) (USED WITH SOCKET: M12883-40-19 (V81349))		1
	JBA	72541-030-0AV2	.TERMINAL BLOCK- (VK0574)		1
	JC-DAB	M400-1265	.RELAY- (VK6265) (USED WITH SOCKET: M12883-40-19 (V81349))		1
	JD	HWBUN1736D5B	.TERMINAL BLOCK- (VK0574)		1
	JE-DAB	M400-1265	.RELAY- (VK6265) (USED WITH SOCKET: M12883-40-19 (V81349))		1
	JG-DAB	M400-1265	.RELAY- (VK6265) (USED WITH SOCKET: M12883-40-19 (V81349))		1
R R R R R R	JHA	9002EN16	.MICRO SWITCH- (V91929) (OPT (VK6596)) (PRE MOD 25G055A) (FOR SPARES PROCURE 21EN108-6)	111232 234234 236236 238276	1
			MISSING ITEM NO. NOT APPLICABLE		

– ITEM NOT ILLUSTRATED

	IDENT	PART NUMBER	1234567 NOMENCLATURE	EFFECT FROM TO	UNITS PER ASSY
R	JHA	21EN108-6	.MICRO SWITCH-	111232	1
R			(V91929)	234234	
R			(OPT (VK6596))	236236	
R			(PRE MOD 25G055A)	238276	
R			(FOR SPARES PROCURE		
R			IN LIEU OF		
R			9002EN16)		
	JJ-DAB	M400-1265	.RELAY-		1
			(VK6265)		
			(USED WITH SOCKET:		
			M12883-40-19		
			(V81349))		
R	JJA	9002EN16	.MICRO SWITCH-	111232	1
R			(V91929)	234234	
R			(OPT (VK6596))	236236	
R			(PRE MOD 25G055A)	238276	
R			(FOR SPARES PROCURE		
R			21EN108-6)		
R	JJA	21EN108-6	.MICRO SWITCH-	111232	1
R			(V91929)	234234	
R			(OPT (VK6596))	236236	
R			(PRE MOD 25G055A)	238276	
R			(FOR SPARES PROCURE		
R			IN LIEU OF		
R			9002EN16)		
	JL-DAB	M402D4A	.RELAY-		1
			(VK6265)		
			(USED WITH SOCKET:		
			M12883-40-24		
			(V81349))		
	K	HWBUN1736D10B	.TERMINAL BLOCK-		1
			(VK0574)		
			(OPT 72444-030-0AV2)		
	KA-DAB	M300-1264	.RELAY-		1
			(VK6265)		
			(USED WITH SOCKET:		
			M12883-41-16		
			(V81349))		
	KB	72541-030-0AV2	.TERMINAL BLOCK-		1
			(VK0574)		
	KC-DAB	M300-1264	.RELAY-		1
			(VK6265)		
			(USED WITH SOCKET:		
			M12883-41-16		
			(V81349))		
	KD	HWBUN1736D5B	.TERMINAL BLOCK-		1
			(VK0574)		
			MISSING ITEM NO. NOT APPLICABLE		

– ITEM NOT ILLUSTRATED

	IDENT	PART NUMBER	1234567 NOMENCLATURE	EFFECT FROM TO	UNITS PER ASSY
	KD-DAB	M300-1264	.RELAY- (VK6265) (USED WITH SOCKET: M12883-41-16 (V81349))		1
	KE-DAB	M300-1264	.RELAY- (VK6265) (USED WITH SOCKET: M12883-41-16 (V81349))		1
R	KHA	9002EN16	.MICRO SWITCH- (V91929) (OPT (VK6596)) (PRE MOD 25G055A) (FOR SPARES PROCURE 21EN108-6)	111232 234234 236236 238276	1
R	KHA	21EN108-6	.MICRO SWITCH- (V91929) (OPT (VK6596)) (PRE MOD 25G055A) (FOR SPARES PROCURE IN LIEU OF 9002EN16)	111232 234234 236236 238276	1
R	KJA	9002EN16	.MICRO SWITCH- (V91929) (OPT (VK6596)) (PRE MOD 25G055A) (FOR SPARES PROCURE 21EN108-6)	111232 234234 236236 238276	1
R	KJA	21EN108-6	.MICRO SWITCH- (V91929) (OPT (VK6596)) (PRE MOD 25G055A) (FOR SPARES PROCURE IN LIEU OF 9002EN16)	111232 234234 236236 238276	1
	L-DR	6308-0010A	.MAGNETIC INDICATOR- (VK0653) (OPT BHGD21TL28WBS595 (V07479))		1
	M	BYW54	.DIODE- (VK0004)		1
	M2-DAG	MRTB20E04-111	.TERMINAL JUNCTION MODULE- (V14283)		1
	N	BYW54	.DIODE- (VK0004)		1
	PU	HWB1146S10B	.TERMINAL BLOCK- (VK0574)		1
			MISSING ITEM NO. NOT APPLICABLE		

– ITEM NOT ILLUSTRATED

IDENT	PART NUMBER	1234567 NOMENCLATURE	EFFECT FROM TO	UNITS PER ASSY
P1-JA-P	BAEREF000003898	.CONNECTOR-PIN (6026-24-61PWCONDD (VK1793))		1
P1-JA-R	BAEREF000004313	.CONNECTOR-SOCKET (6027-24-61SWCONDD (VK1793))		1
P2-JA-P	BAEREF000004077	.CONNECTOR-PIN (6026-22-41PNCONDD (VK1793))		1
P2-JA-R	BAEREF000004329	.CONNECTOR-SOCKET (6027-22-41SNCONDD (VK1793))		1
RB	10201-1	.STALL DETECTOR- (VK0100)		1
RC-SSU1	C82106-4	.SIGNAL SUMMING UNIT- (V83326) (OPT (V+1245)) (USED WITH: CONNECTOR DPXBNA45333S04 (V71468) (OPT (VK0316)) OUTLET 20745-8 (V71468) (OPT (VK0316)))	166166	1
RC-SSU1	C82106-5	.SIGNAL SUMMING UNIT- (V83326) (OPT (V+1245)) (USED WITH: CONNECTOR DPXBNA45333S04 (V71468) (OPT (VK0316)) OUTLET 20745-8 (V71468) (OPT (VK0316)))	111165 167232 234234 236236 238276	1
RD-SSU2	C82106-4	.SIGNAL SUMMING UNIT- (V83326) (OPT (V+1245)) (USED WITH: CONNECTOR DPXBNA45333S04 (V71468) (OPT (VK0316)) OUTLET 20745-8 (V71468) (OPT (VK0316)))	166166	1
		MISSING ITEM NO. NOT APPLICABLE		

– ITEM NOT ILLUSTRATED

IDENT	PART NUMBER	1234567 NOMENCLATURE	EFFECT FROM TO	UNITS PER ASSY
RD-SSU2	C82106-5	.SIGNAL SUMMING UNIT- (V83326) (OPT (V+1245)) (USED WITH: CONNECTOR DPXBNA45333S04 (V71468) (OPT (VK0316)) OUTLET 20745-8 (V71468) (OPT (VK0316)))	111165 167232 234234 236236 238276	1
RS	B1443-1	.STICKSHAKER- (VK5288)		1
RW	B1443-1	.STICKSHAKER- (VK5288)		1
SC-P	MTC100YH2-009	.SHELL-PLUG (VK1010) (USED WITH WAFERS: TYPE A, MTC100KT2-1103 DUMMY B, MTCX2X200-200)	111232 234234 236236 238254	1
SC-P	MTC100YH2-009	.SHELL-PLUG (VK1010) (USED WITH INSERTS: PRIMARY MTC100YC1-003 SECONDARY MTC100YC1-004)	255276	1
SC-R	MTC100YH2-010	.SHELL-RECEPTACLE (VK1010) (USED WITH WAFERS: TYPE A, MTC100KT2-1101 DUMMY B, MTCX2X200-200)	111232 234234 236236 238254	1
SC-R	MTC100YH2-010	.SHELL-RECEPTACLE (VK1010) (USED WITH INSERTS: PRIMARY MTC100YC1-001 SECONDARY MTC100YC1-002)	255276	1
T-CA	HWBUN1736D6B	.TERMINAL BLOCK- (VK0574)		1
T-CD	HWBUN1736D6B	.TERMINAL BLOCK- (VK0574)		1
TA-DAJ	HWBUN1736D10B	.TERMINAL BLOCK- (VK0574)		1
TB-DAJ	HWBUN1146D10B	.TERMINAL BLOCK- (VK0574)		1
XC	HWBUN1146S5B	.TERMINAL BLOCK- (VK0574)		1
X1-DAB	MRTB20E57-111	.TERMINAL JUNCTION MODULE- (V14283)		1
X14-DAB	MRTB20E04-111	.TERMINAL JUNCTION MODULE- (V14283)		1
		MISSING ITEM NO. NOT APPLICABLE		

– ITEM NOT ILLUSTRATED

IDENT	PART NUMBER	1234567 NOMENCLATURE	EFFECT FROM TO	UNITS PER ASSY
X15-DAB	MRTB20E04-111	.TERMINAL JUNCTION MODULE- (V14283)		1
X2-DAB	MRTB20E04-111	.TERMINAL JUNCTION MODULE- (V14283)		1
X4-DAB	MRTB20E57-111	.TERMINAL JUNCTION MODULE- (V14283)		1
Y10-DAB	MRTB20E03-784	.TERMINAL JUNCTION MODULE- (V14283)		1
Y11-DAB	MRTB20E03-784	.TERMINAL JUNCTION MODULE- (V14283)		1
Y16-DAB	MRTB16E03-111	.TERMINAL JUNCTION MODULE- (V14283)		1
Z-CA	25-8NF3685-1A	.DIODE BOARD ASSY- (COMPRISING OF: POSITION 33/34 DIODE BYW54 POSITION 35/36 DIODE BYW54 POSITION 37/38 DIODE BYW54 POSITION 39/40 DIODE BYW54 POSITION 41/42 DIODE BYW54 POSITION 43/44 DIODE BYW54 POSITION 47/48 DIODE BYW54 POSITION 49/50 DIODE BYW54 POSITION 51/52 DIODE BYW54 POSITION 53/54 DIODE BYW54 POSITION 55/56 DIODE BYW54 POSITION 57/58 DIODE BYW54 POSITION 59/60 DIODE BYW54 (VK0004))		1
		MISSING ITEM NO. NOT APPLICABLE		

- ITEM NOT ILLUSTRATED

IDENT	PART NUMBER	1234567 NOMENCLATURE	EFFECT FROM TO	UNITS PER ASSY
Z-CD	25-8NF3685-1A	.DIODE BOARD ASSY- (COMPRISING OF: POSITION 33/34 DIODE BYW54 POSITION 35/36 DIODE BYW54 POSITION 37/38 DIODE BYW54 POSITION 39/40 DIODE BYW54 POSITION 41/42 DIODE BYW54 POSITION 45/46 DIODE BYW54 POSITION 47/48 DIODE BYW54 (VK0004))		1
		MISSING ITEM NO. NOT APPLICABLE		

– ITEM NOT ILLUSTRATED

FLAPS

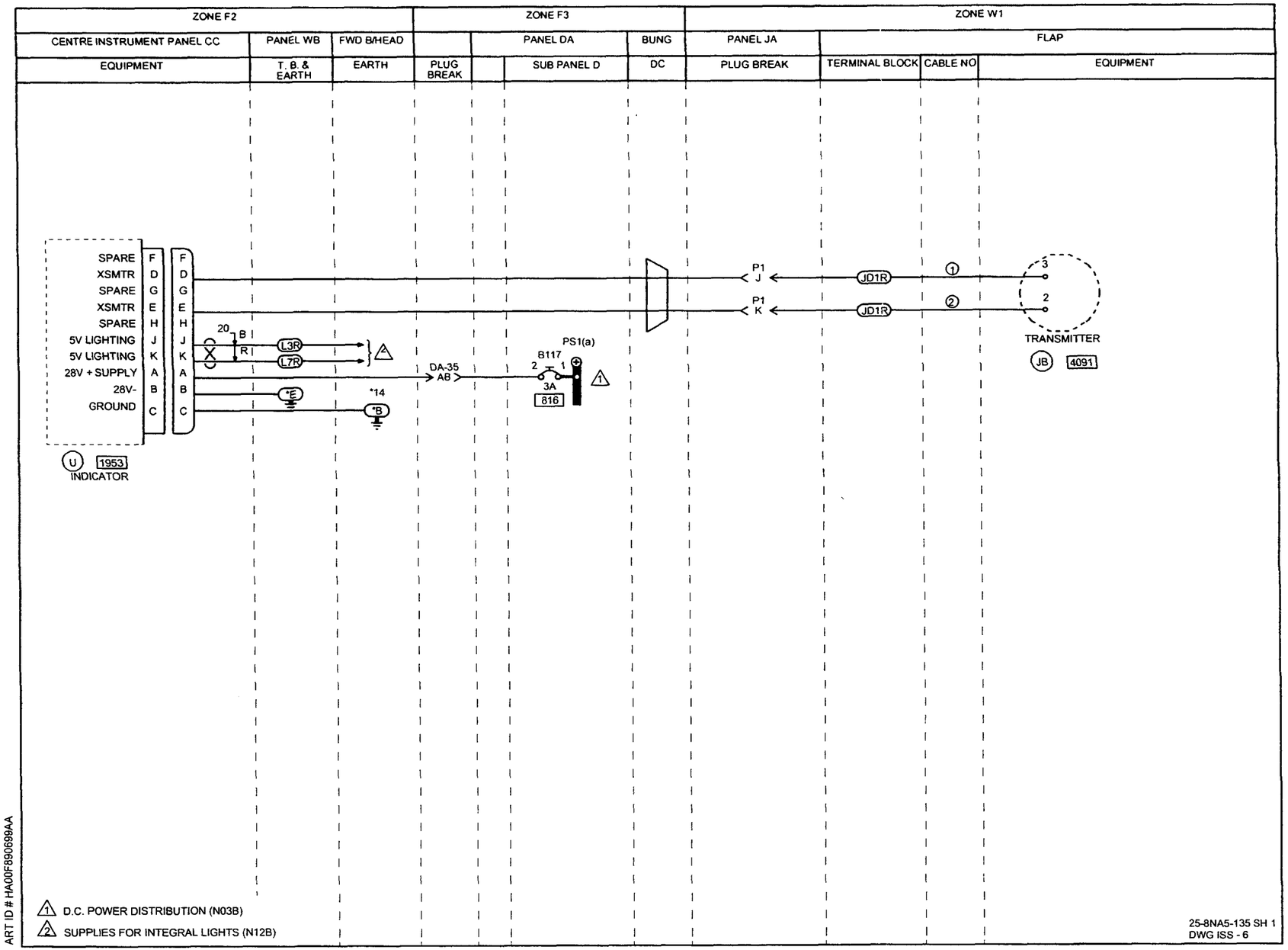

ART ID # HA00F890699AA

IDENT	PART NUMBER	1234567 NOMENCLATURE	EFFECT FROM TO	UNITS PER ASSY
		FLAP POSITION INDICATOR	091276	
	25-8NA5-135	WIRING DIAGRAM-		RF
		(MOD 253149C)		
		(MOD 25F505A)		
		(PRE MOD 25F968A)		
B117-DAD	483TCG11J25-3A	.CIRCUIT BREAKER-3AMP		1
		(VU0091)		
DA35-P	MTC100YH2-009	.SHELL-PLUG	091254	1
		(VK1010)		
		(USED WITH WAFERS:		
		TYPE A, MTC100KT2-1101		
		TYPE B, MTC100KT2-1102)		
DA35-P	MTC100YH2-009	.SHELL-PLUG	255276	1
		(VK1010)		
		(USED WITH INSERTS:		
		PRIMARY MTC100YC1-001		
		SECONDARY MTC100YC1-002)		
DA35-R	MTC100YH2-010	.SHELL-RECEPTACLE	091254	1
		(VK1010)		
		(USED WITH WAFERS:		
		TYPE A, MTC100KT2-1103		
		TYPE B, MTC100KT2-1104)		
DA35-R	MTC100YH2-010	.SHELL-RECEPTACLE	255276	1
		(VK1010)		
		(USED WITH INSERTS:		
		PRIMARY MTC100YC1-003		
		SECONDARY MTC100YC1-004)		
DC	422254-8	.BUNG-		1
		(VK1793)		
JB	S132-3-22	.TRANSMITTER-FLAP POSITION		1
		(VU1588)		
JD	HWBUN1736D5B	.TERMINAL BLOCK-		1
		(VK0574)		
L-WB	72444-030-0AV2	.TERMINAL BLOCK-		1
		(VK0574)		
P1-JA-P	BAEREF000003898	.CONNECTOR-PIN		1
		(6026-24-61PWCONDD		
		(VK1793))		
P1-JA-R	BAEREF000004328	.CONNECTOR-RECEPTACLE		1
		(6027-24-61SWCONDD		
		(VK1793))		
U-CC	2132-01-0011	.INDICATOR-FLAP POSITION		1
		(UNIT EXCHANGE ITEM)		
		(VU1588)		
		MISSING ITEM NO. NOT APPLICABLE		

– ITEM NOT ILLUSTRATED

AIRBRAKE INDICATION/SELECTION

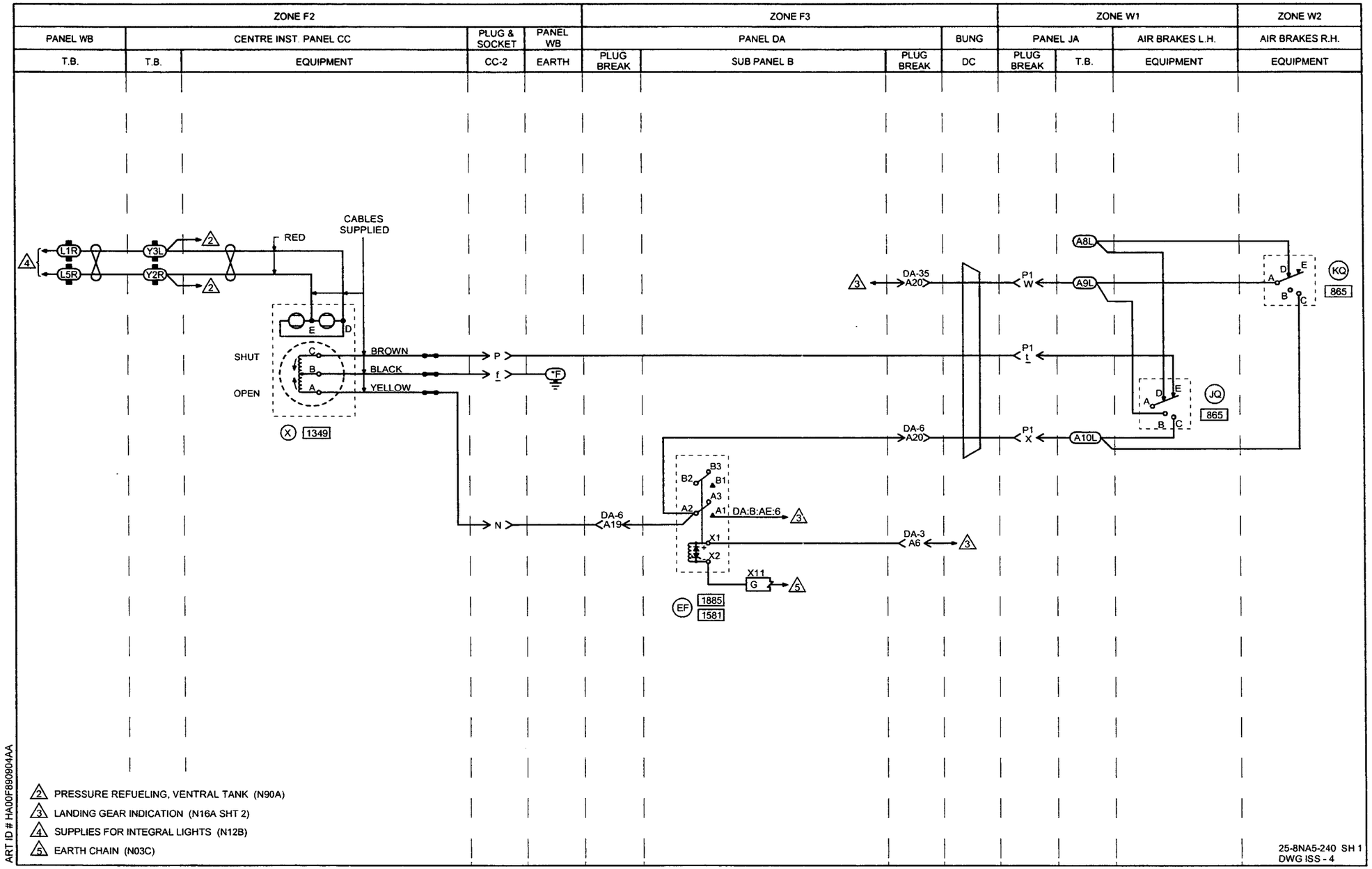

2 PRESSURE REFUELING, VENTRAL TANK (N90A)
3 LANDING GEAR INDICATION (N16A SHT 2)
4 SUPPLIES FOR INTEGRAL LIGHTS (N12B)
5 EARTH CHAIN (N03C)

ART ID # HA00F890904AA

25-8NA5-240 SH 1
DWG ISS - 4

IDENT	PART NUMBER	1234567 NOMENCLATURE	EFFECT FROM TO	UNITS PER ASSY
		AIR BRAKE INDICATORS	092093 095096 098110 112112 114120 231231 234234	
	25-8NA5-240	WIRING DIAGRAM- (MOD 253149C)		RF
A-JA	HWBUN1146D10B	.TERMINAL BLOCK- (VK0574)		1
CC2-P	BAEREF000003124	.CONNECTOR-SOCKET (6027-20-41SWCONDB (VK1793))		1
CC2-R	6026-20-41PW	.CONNECTOR-PIN (VK4161) (USED WITH STRAIN RELIEF:602GB129-20-1 (VK1100))		1
DA3-P	MTC100YH1-003	.SHELL-PLUG (VK1010) (USED WITH WAFER: TYPE A, MTC100KT1-1101 TYPE B, MTC100KT1-1102)		1
DA3-R	MTC100YH1-004	.SHELL-RECEPTACLE (VK1010) (USED WITH WAFER: TYPE A, MTC100KT1-1103 TYPE B, MTC100KT1-1104)		1
DA35-P	MTC100YH2-009	.SHELL-PLUG (VK1010) (USED WITH WAFER: TYPE A, MTC100KT2-1101 TYPE B, MTC100KT2-1102)		1
DA35-R	MTC100YH2-010	.SHELL-RECEPTACLE (VK1010) (USED WITH WAFER: TYPE A, MTC100KT2-1103 TYPE B, MTC100KT2-1104)		1
DA6-P	MTC100YH2-009	.SHELL-PLUG (VK1010) (USED WITH WAFER: TYPE A, MTC100KT2-1101 TYPE B, MTC100KT2-1102)		1
DA6-R	MTC100YH2-010	.SHELL-RECEPTACLE (VK1010) (USED WITH WAFER: TYPE A, MTC100KT2-1103 TYPE B, MTC100KT2-1104)		1
		MISSING ITEM NO. NOT APPLICABLE		

— ITEM NOT ILLUSTRATED

IDENT	PART NUMBER	1234567 NOMENCLATURE	EFFECT FROM TO	UNITS PER ASSY
DC	422254-8	.BUNG- (VK1793)		1
EF-DAB	M300-1264	.RELAY- (VK6265) (USED WITH SOCKET: M12883-41-16 (V81349))		1
JQ	1322ZMK3	.MICRO SWITCH- (VK0653)		1
KQ	1322ZMK3	.MICRO SWITCH- (VK0653)		1
L-WB	72444-030-0AV2	.TERMINAL BLOCK- (VK0574)		1
P1-JA-P	BAEREF000004328	.CONNECTOR-SOCKET (6027-24-61SWCONDD (VK1793))		1
P1-JA-R	BAEREF000003898	.CONNECTOR-PIN (6026-24-61PWCONDD (VK1793))		1
X-CC	6333-014-01A4	.MAGNETIC INDICATOR- (VK0653)		1
X11-DAB	MRTB20E04-111	.TERMINAL JUNCTION MODULE- (V14283)		1
Y-CC	HWBUN1736D10B	.TERMINAL BLOCK- (VK0574)		1

MISSING ITEM NO. NOT APPLICABLE

– ITEM NOT ILLUSTRATED

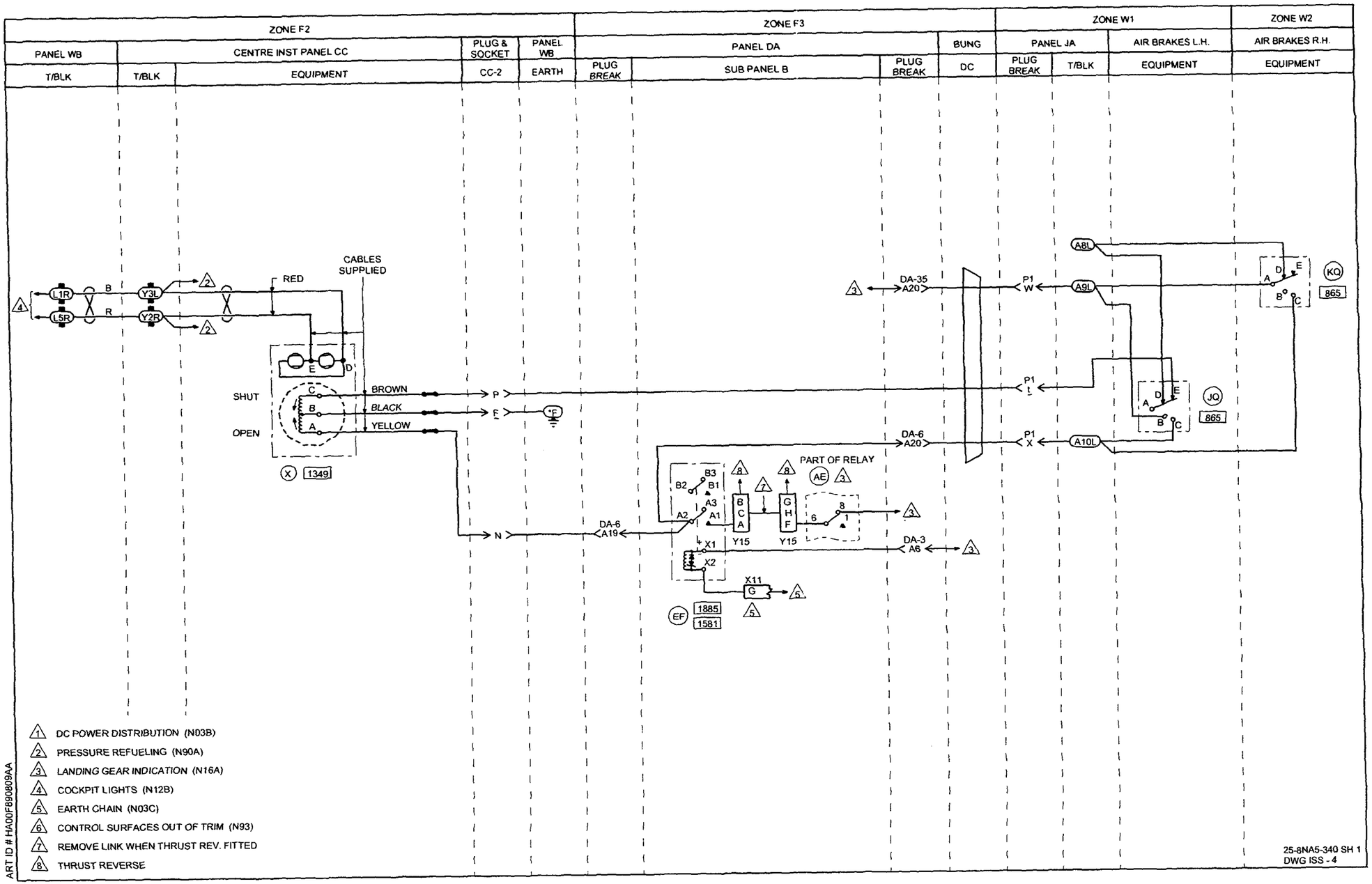
ZONE F2
ZONE F3
ZONE W1
ZONE W2
PANEL WB
CENTRE INST PANEL CC
PLUG & SOCKET
PANEL WB
PANEL DA
BUNG
PANEL JA
AIR BRAKES L.H.
AIR BRAKES R.H.
T/BLK
T/BLK
EQUIPMENT
CC-2
EARTH
PLUG BREAK
SUB PANEL B
PLUG BREAK
DC
PLUG BREAK
T/BLK
EQUIPMENT
EQUIPMENT
CABLES SUPPLIED
RED
B
R
L1R
L5R
Y3L
Y2R
SHUT
OPEN
BROWN
BLACK
YELLOW
P
F
N
DA-35 A20
DA-6 A20
DA-6 A19
DA-3 A6
P1 W
P1 L
P1 X
A8L
A9L
A10L
KQ
JQ
865
1349
PART OF RELAY
AE
EF
1885
1581
Y15
X11
X1
X2
1. DC POWER DISTRIBUTION (N03B)
2. PRESSURE REFUELING (N90A)
3. LANDING GEAR INDICATION (N16A)
4. COCKPIT LIGHTS (N12B)
5. EARTH CHAIN (N03C)
6. CONTROL SURFACES OUT OF TRIM (N93)
7. REMOVE LINK WHEN THRUST REV. FITTED
8. THRUST REVERSE
ART ID # HA00F690809AA
25-8NA5-340 SH 1
DWG ISS - 4

IDENT	PART NUMBER	1234567 NOMENCLATURE	EFFECT FROM TO	UNITS PER ASSY
		AIR BRAKE INDICATORS	091091 094094 097097 111111 113113 121179 181181 183185 187196 198230 232233 235257 259263 267276	
	25-8NA5-340	WIRING DIAGRAM- (MOD 259283A) (MOD 25F505A)		RF
A-JA	HWBUN1146D10B	.TERMINAL BLOCK- (VK0574)		1
AE-DAB	HDS8SF3J03	.RELAY- (VK1793) (USED WITH SOCKET: RSE120074 (V58982))		1
CC2-P	6026-20-41PW	.CONNECTOR-PIN (VK4161) (USED WITH BACKSHELL: 602GB129-20-1 (VK1100))		1
CC2-R	BAEREF000003124	.CONNECTOR-SOCKET (6027-20-41SWCONDB (VK1793))		1
DA3-P	MTC100YH1-003	.SHELL-PLUG (VK1010) (USED WITH WAFERS: TYPE A, MTC100KT1-1101 TYPE B, MTC100KT1-1102)	091091 094094 097097 111111 113113 121179 181181 183185 187196 198230 232233 235254	1
DA3-P	MTC100YH1-003	.SHELL-PLUG (VK1010) (USED WITH INSERT: MTC100YC1-005)	255257 259263 267276	1
		MISSING ITEM NO. NOT APPLICABLE		

- ITEM NOT ILLUSTRATED

IDENT	PART NUMBER	1234567 NOMENCLATURE	EFFECT FROM TO	UNITS PER ASSY
DA3-R	MTC100YH1-004	.SHELL-RECEPTACLE (VK1010) (USED WITH WAFERS: TYPE A, MTC100KT1-1103 TYPE B, MTC100KT1-1104)	091091 094094 097097 111111 113113 121179 181181 183185 187196 198230 232233 235254	1
DA3-R	MTC100YH1-004	.SHELL-RECEPTACLE (VK1010) (USED WITH INSERT: MTC100YC1-006)	255257 259263 267276	1
DA35-P	MTC100YH2-009	.SHELL-PLUG (VK1010) (USED WITH WAFERS: TYPE A, MTC100KT2-1101 TYPE B, MTC100KT2-1102)	091091 094094 097097 111111 113113 121179 181181 183185 187196 198230 232233 235254	1
DA35-P	MTC100YH2-009	.SHELL-PLUG (VK1010) (USED WITH INSERTS: PRIMARY MTC100YC1-001 SECONDARY MTC100YC1-002)	255257 259263 267276	1
DA35-R	MTC100YH2-010	.SHELL-RECEPTACLE (VK1010) (USED WITH WAFERS: TYPE A, MTC100KT2-1103 TYPE B, MTC100KT2-1104)	091091 094094 097097 111111 113113 121179 181181 183185 187196 198230 232233 235254	1
DA35-R	MTC100YH2-010	.SHELL-RECEPTACLE (VK1010) (USED WITH INSERTS: PRIMARY MTC100YC1-003 SECONDARY MTC100YC1-004)	255257 259263 267276	1

MISSING ITEM NO. NOT APPLICABLE

– ITEM NOT ILLUSTRATED

IDENT	PART NUMBER	1234567 NOMENCLATURE	EFFECT FROM TO	UNITS PER ASSY
DA6-P	MTC100YH2-009	.SHELL-PLUG (VK1010) (USED WITH WAFERS: TYPE A, MTC100KT2-1101 TYPE B, MTC100KT2-1102)	091091 094094 097097 111111 113113 121179 181181 183185 187196 198230 232233 235254	1
DA6-P	MTC100YH2-009	.SHELL-PLUG (VK1010) (USED WITH INSERTS: PRIMARY MTC100YC1-001 SECONDARY MTC100YC1-002)	255257 259263 267276	1
DA6-R	MTC100YH2-010	.SHELL-RECEPTACLE (VK1010) (USED WITH WAFERS: TYPE A, MTC100KT2-1103 TYPE B, MTC100KT2-1104)	091091 094094 097097 111111 113113 121179 181181 183185 187196 198230 232233 235254	1
DA6-R	MTC100YH2-010	.SHELL-RECEPTACLE (VK1010) (USED WITH INSERTS: PRIMARY MTC100YC1-003 SECONDARY MTC100YC1-004)	255257 259263 267276	1
DC	422254-8	.BUNG- (VK1793)		1
EF-DAB	M300-1264	.RELAY- (VK6265) (USED WITH SOCKET: M12883-41-16 (V81349))		1
JQ	1322ZMK3	.MICRO SWITCH- (VK0653)		1
KQ	1322ZMK3	.MICRO SWITCH- (VK0653)		1
L-WB	72444-030-0AV2	.TERMINAL BLOCK- (VK0574)		1
P1-JA-P	BAEREF000004328	.CONNECTOR-SOCKET (6027-24-61SWCONDD (VK1793))		1
		MISSING ITEM NO. NOT APPLICABLE		

– ITEM NOT ILLUSTRATED

IDENT	PART NUMBER	1234567 NOMENCLATURE	EFFECT FROM TO	UNITS PER ASSY
P1-JA-R	BAEREF000003898	.CONNECTOR-PIN (6026-24-61PWCONDD (VK1793))		1
X-CC	6333-014-01A4	.MAGNETIC INDICATOR- (VK0653)		1
X11-DAB	MRTB20E04-111	.TERMINAL JUNCTION MODULE- (V14283)		1
Y-CC	HWBUN1736D10B	.TERMINAL BLOCK- (VK0574)		1
Y15-DAB	MRTB20E57-111	.TERMINAL JUNCTION MODULE- (V14283)		1
		MISSING ITEM NO. NOT APPLICABLE		

- ITEM NOT ILLUSTRATED

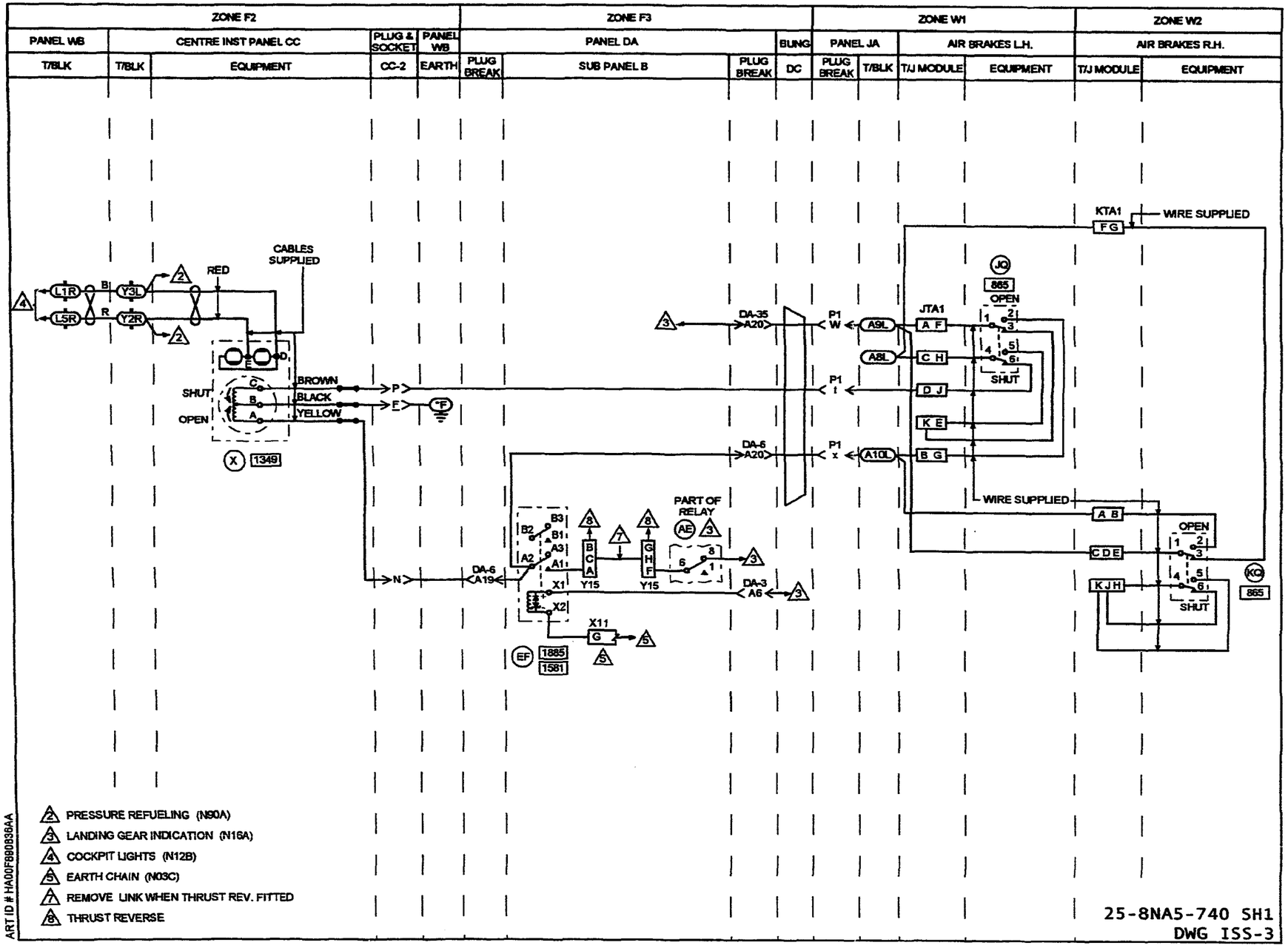
ZONE F2
ZONE F3
ZONE W1
ZONE W2
PANEL WB
CENTRE INST PANEL CC
PLUG & SOCKET
PANEL WB
PANEL DA
BUNG
PANEL JA
AIR BRAKES L.H.
AIR BRAKES R.H.
T/BLK
T/BLK
EQUIPMENT
CC-2
EARTH
PLUG BREAK
SUB PANEL B
PLUG BREAK
DC
PLUG BREAK
T/BLK
T/J MODULE
EQUIPMENT
T/J MODULE
EQUIPMENT
KTA1
WIRE SUPPLIED
CABLES SUPPLIED
RED
L1R
L5R
Y3L
Y2R
B
R
SHUT
OPEN
BROWN
BLACK
YELLOW
P
F
X 1349
DA-35 A20
P1 W
A9L
A8L
JTA1
A F
C H
D J
K E
B G
JQ 865
OPEN
SHUT
P1 t
DA-6 A20
P1 x
A10L
WIRE SUPPLIED
A B
C D E
K J H
KQ 865
PART OF RELAY
AE
DA-6 A19
X1
X2
Y15
Y15
DA-3 A6
X11
G
EF 1885 1581
ART ID # HA00F980B36AA
2 PRESSURE REFUELING (N90A)
3 LANDING GEAR INDICATION (N16A)
4 COCKPIT LIGHTS (N12B)
5 EARTH CHAIN (N03C)
7 REMOVE LINK WHEN THRUST REV. FITTED
8 THRUST REVERSE
25-8NA5-740 SH1
DWG ISS-3

	IDENT	PART NUMBER	1234567 NOMENCLATURE	EFFECT FROM TO	UNITS PER ASSY
			AIR BRAKE INDICATORS	258258 264265	
R R R R R		25-8NA5-740	WIRING DIAGRAM- (MODIFIED BY SB27-162-253552A) (MOD 253552A) (PRE MOD 25F968A)		RF
	A-JA	HWBUN1146D10B	.TERMINAL BLOCK- (VK0574)		1
	AE-DAB	HDS8SF3J03	.RELAY- (VK1793) (USED WITH SOCKET: RSE120074 (V58982))		1
	CC2-P	6026-20-41PW	.CONNECTOR-PIN (VK4161) (USED WITH BACKSHELL: 602GB129-20-1 (VK1100))		1
	CC2-R	BAEREF000003124	.CONNECTOR-SOCKET (6027-20-41SWCONDB (VK1793))		1
	DA3-P	MTC100YH1-003	.SHELL-PLUG (VK1010) (USED WITH INSERT: MTC100YC1-005)		1
	DA3-R	MTC100YH1-004	.SHELL-RECEPTACLE (VK1010) (USED WITH INSERT: MTC100YC1-006)		1
	DA35-P	MTC100YH2-009	.SHELL-PLUG (VK1010) (USED WITH INSERTS: PRIMARY MTC100YC1-001 SECONDARY MTC100YC1-002)		1
	DA35-R	MTC100YH2-010	.SHELL-RECEPTACLE (VK1010) (USED WITH INSERTS: PRIMARY MTC100YC1-003 SECONDARY MTC100YC1-004)		1
	DA5-P	MTC100YH2-009	.SHELL-PLUG (VK1010) (USED WITH INSERTS: PRIMARY MTC100YC1-001 SECONDARY MTC100YC1-002)		1
	DA5-R	MTC100YH2-010	.SHELL-RECEPTACLE (VK1010) (USED WITH INSERTS: PRIMARY MTC100YC1-003 SECONDARY MTC100YC1-004)		1
			MISSING ITEM NO. NOT APPLICABLE		

– ITEM NOT ILLUSTRATED

IDENT	PART NUMBER	1234567 NOMENCLATURE	EFFECT FROM TO	UNITS PER ASSY
DA6-P	MTC100YH2-009	.SHELL-PLUG (VK1010) (USED WITH INSERTS: PRIMARY MTC100YC1-001 SECONDARY MTC100YC1-002)		1
DA6-R	MTC100YH2-010	.SHELL-RECEPTACLE (VK1010) (USED WITH INSERTS: PRIMARY MTC100YC1-003 SECONDARY MTC100YC1-004)		1
DC	422254-8	.BUNG- (VK1793)		1
DE-DAB	M400-1265	.RELAY- (VK6265) (USED WITH SOCKET: M12883-40-19 (V81349))		1
EF-DAB	M300-1264	.RELAY- (VK6265) (USED WITH SOCKET: M12883-41-16 (V81349))		1
GM-CC	BYW54	.DIODE- (VK0004)		1
GR-CC	BYW54	.DIODE- (VK0004)		1
JQ	P6-24015	.MICRO SWITCH- (V21649)		1
JTA	MRTB20E52-724	.TERMINAL JUNCTION MODULE- (V14283)		1
KQ	P6-24015	.MICRO SWITCH- (V21649)		1
KTA	MRTB20E52-724	.TERMINAL JUNCTION MODULE- (V14283)		1
L-WA	72444-030-0AV2	.TERMINAL BLOCK- (VK0574)		1
P1-JA-P	BAEREF000003898	.CONNECTOR-PIN (6026-24-61PWCONDD (VK1793))		1
P1-JA-R	BAEREF000004328	.CONNECTOR-SOCKET (6027-24-61SWCONDD (VK1793))		1
RJ-DAB	BYW54	.DIODE- (VK0004)		1
X-CC	6333-014-01A4	.MAGNETIC INDICATOR- (VK0653)		1
X11-DAB	MRTB20E04-111	.TERMINAL JUNCTION MODULE- (V14283)		1
X15-DAB	MRTB20E04-111	.TERMINAL JUNCTION MODULE- (V14283)		1
		MISSING ITEM NO. NOT APPLICABLE		

– ITEM NOT ILLUSTRATED

IDENT	PART NUMBER	1234567 NOMENCLATURE	EFFECT FROM TO	UNITS PER ASSY
Y15-DAB	MRTB20E57-111	.TERMINAL JUNCTION MODULE- (V14283)		1
		MISSING ITEM NO. NOT APPLICABLE		

– ITEM NOT ILLUSTRATED

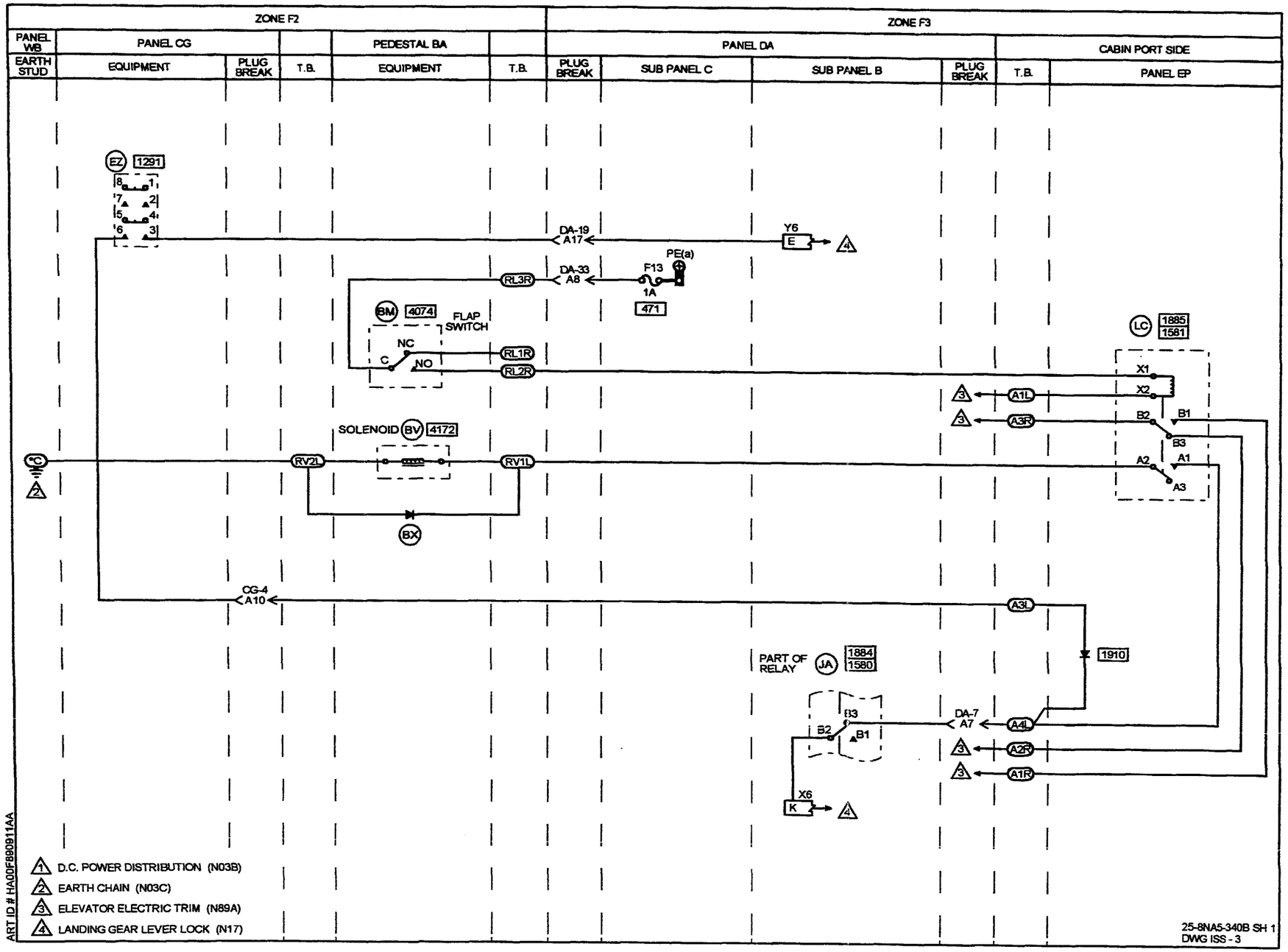
ZONE F2
ZONE F3
PANEL WB
EARTH STUD
PANEL CG
EQUIPMENT
PLUG BREAK
T.B.
PEDESTAL BA
EQUIPMENT
T.B.
PANEL DA
PLUG BREAK
SUB PANEL C
SUB PANEL B
PLUG BREAK
CABIN PORT SIDE
T.B.
PANEL EP
EZ 1291
DA-19 A17
Y6 E
PE(a)
F13
1A
471
DA-33 A8
RL3R
BM 4074
FLAP SWITCH
NC
C
NO
RL1R
RL2R
LC 1885 1581
X1
X2
B2
B1
B3
A2
A1
A3
A1L
A3R
SOLENOID BV 4172
RV2L
RV1L
BX
CG-4 A10
A3L
1910
PART OF RELAY JA 1884 1580
DA-7 A7
A4L
A2R
A1R
X6 K
D.C. POWER DISTRIBUTION (N03B)
EARTH CHAIN (N03C)
ELEVATOR ELECTRIC TRIM (N89A)
LANDING GEAR LEVER LOCK (N17)
ART ID # HA00F890911AA
25-8NA5-340B SH 1
DWG ISS - 3

IDENT	PART NUMBER	1234567 NOMENCLATURE	EFFECT FROM TO	UNITS PER ASSY
		AIRBRAKE SELECTOR LEVER BAULK	099099 105105 121121 161161 163163	
	25-8NA5-340B	WIRING DIAGRAM- (MOD 252994C)		RF
A-EP	HWBUN1736D5B	.TERMINAL BLOCK- (VK0574) (USED WITH DIODE: 25-7NF1815-9A)		1
BM-BA	1SX1T	.MICRO SWITCH- (VK6596)		1
BV-BA	25CXZ109-7	.SOLENOID- (VK0023)		1
BX-BA	25-7NF1815-5A	.DIODE ASSY-		1
CG4-P	MTC100YH1-003	.SHELL-PLUG (VK1010) (USED WITH WAFERS: TYPE A, MTC100KT1-1101 TYPE B, MTC100KTI-1102)		1
CG4-R	MTC100YH1-004	.SHELL-RECEPTACLE (VK1010) (USED WITH WAFERS: TYPE A, MTC100KT1-1103 TYPE B, MTC100KT1-1104)		1
DA19-P	MTC100YH2-009	.SHELL-PLUG (VK1010) (USED WITH WAFERS: TYPE A, MTC100KT2-1101 TYPE B, MTC100KT2-1102)		1
DA19-R	MTC100YH2-010	.SHELL-RECEPTACLE (VK1010) (USED WITH WAFERS: TYPE A, MTC100KT2-1103 TYPE B, MTC100KT2-1104)		1
DA33-P	MTC100YH2-009	.SHELL-PLUG (VK1010) (USED WITH WAFERS: TYPE A, MTC100KT2-1101 TYPE B, MTC100KT2-1102)		1
DA33-R	MTC100YH2-010	.SHELL-RECEPTACLE (VK1010) (USED WITH WAFERS: TYPE A, MTC100KT2-1103 TYPE B, MTC100KT2-1104)		1

MISSING ITEM NO. NOT APPLICABLE

– ITEM NOT ILLUSTRATED

IDENT	PART NUMBER	1234567 NOMENCLATURE	EFFECT FROM TO	UNITS PER ASSY
DA7-P	MTC100YH1-003	.SHELL-PLUG (VK1010) (USED WITH WAFERS: TYPE A, MTC100KT1-1101 DUMMY B, MTCX1X100-100)		1
DA7-R	MTC100YH1-004	.SHELL-RECEPTACLE (VK1010) (USED WITH WAFERS: TYPE A, MTC100KT1-1103 DUMMY B, MTCX1X100-100)		1
EZ-CG	WC1503	.SWITCH- (VK0653)		1
F13-DAC	5920-99-0120073	.FUSE-1AMP (VK0657)		1
JA-DAB	M400-1265	.RELAY- (VK6265) (USED WITH SOCKET: M12883-40-19 (V81349))		1
LC-EP	M300-1264	.RELAY- (VK6265) (USED WITH SOCKET: M12883-41-16 (V81349))		1
RL-BA	HWBUN1736D5B	.TERMINAL BLOCK- (VK0574)		1
RV-BA	HWBUN1146D5B	.TERMINAL BLOCK- (VK0574)		1
X6-DAB	MRTB20E57-111	.TERMINAL JUNCTION MODULE- (V14283)		1
Y6-DAB	MRTB20E04-111	.TERMINAL JUNCTION MODULE- (V14283)		1

MISSING ITEM NO. NOT APPLICABLE

– ITEM NOT ILLUSTRATED

CHAPTER

28

FUEL

CHAPTER 28 - FUEL

TABLE OF CONTENTS

SUBJECT	CHAPTER SECTION UNIT	FIGURE	EFFECT
PUMPS	28-21-00		
FUEL PUMPS	28-21-05	2	091120
FUEL PUMPS	28-21-05	3	121151
FUEL PUMPS	28-21-05	4	152276

CHAPTER 28 - FUEL

TABLE OF CONTENTS

SUBJECT	CHAPTER SECTION UNIT	FIGURE	EFFECT
INDICATING	28-40-00		
FUEL CONTENTS GAUGES	28-40-10	4	091115
			117176
			178183
			185189
			191193
			195197
			199210
			212212
			216260
			262276
FUEL CONTENTS GAUGES	28-40-10	5	116116
			177177
			184184
			190190
			194194
			198198
			211211
			214215
			261261
FUEL FILTER BLOCKED AND OVERHEAT	28-40-40	2	091276
FUEL FLOWMETERS	28-40-30	5	091093
			095105
			107108
			111111
			113114
			117117
			119119
			121129
			132132
			135142
			144145
			147147
			150163
			166166
			168176
			178181
			183183
			185185
			187189
			191191

CHAPTER 28 - FUEL

TABLE OF CONTENTS

SUBJECT	CHAPTER SECTION UNIT	FIGURE	EFFECT
			193193
			195196
			199207
			209210
			212212
			216260
			262276
FUEL PRESSURE	28-40-20	2	091276
PRESSURE REFUELING	28-41-00		
PRESSURE REFUELLING CONTROL	28-41-20	3	091179
			181232
			234234
			236236
			238276
PRESSURE REFUELLING-WING TANKS	28-41-30	2	091232
			234234
			236236
			238276
PRESSURE REFUELLING, VENTRAL TANK	28-41-10	2	091112
			114123
			125143
			145179
			181232
			234234
			236236
			238276
PRESSURE REFUELLING, VENTRAL TANK	28-41-10	3	113113
			124124
			144144
FUEL TRANSFER WARNING	28-42-00		
TRANSFER FUEL COCK WARNING	28-42-10	2	091276

CH-SECT-UNIT-FIG	PAGE NO.	DATE
*28	1	AUG 31/03
*28	2	AUG 31/03
*28	3	AUG 31/03
28-21-00	1	MAY 31/02
28-21-05- 2	0	MAY 31/02
28-21-05- 2	0A	MAY 31/02
28-21-05- 2	1	MAY 31/02
28-21-05- 2	2	MAY 31/02
28-21-05- 2	3	MAY 31/02
28-21-05- 2	4	MAY 31/02
28-21-05- 3	0	MAY 31/02
28-21-05- 3	0A	MAY 31/02
28-21-05- 3	1	MAY 31/02
28-21-05- 3	2	MAY 31/02
28-21-05- 3	3	MAY 31/02
28-21-05- 3	4	MAY 31/02
28-21-05- 4	0	MAY 31/02
28-21-05- 4	0A	MAY 31/02
28-21-05- 4	1	MAY 31/02
28-21-05- 4	2	MAY 31/02
28-21-05- 4	3	MAY 31/02
28-21-05- 4	4	MAY 31/02
28-21-05- 4	5	MAY 31/02
28-40-00	1	MAY 31/02
28-40-10- 4	0	NOV 30/02
28-40-10- 4	0A	NOV 30/02
28-40-10- 4	1	NOV 30/02
28-40-10- 4	2	MAY 31/02
28-40-10- 4	3	MAY 31/02
28-40-10- 4	4	MAY 31/02
28-40-10- 5	0	MAY 31/02
28-40-10- 5	0A	MAY 31/02
28-40-10- 5	1	MAY 31/02
28-40-10- 5	2	MAY 31/02
28-40-10- 5	3	MAY 31/02
28-40-20- 2	0	NOV 30/02
28-40-20- 2	1	MAY 31/02
28-40-20- 2	2	MAY 31/02
28-40-30- 5	0	MAY 31/02
28-40-30- 5	1	NOV 30/02
28-40-30- 5	2	MAY 31/02
28-40-40- 2	0	MAY 31/02
28-40-40- 2	1	MAY 31/02
28-40-40- 2	2	MAY 31/02
28-41-00	1	MAY 31/02
28-41-10- 2	0	MAY 31/02
28-41-10- 2	0A	MAY 31/02
28-41-10- 2	1	NOV 30/02
28-41-10- 2	2	NOV 30/02
28-41-10- 2	3	NOV 30/02
28-41-10- 2	4	NOV 30/02
28-41-10- 2	5	NOV 30/02
28-41-10- 3	0	NOV 30/02
28-41-10- 3	0A	NOV 30/02
28-41-10- 3	1	MAY 31/02
28-41-10- 3	2	MAY 31/02
28-41-10- 3	3	MAY 31/02
28-41-10- 3	4	MAY 31/02
28-41-20- 3	0	MAY 31/02
28-41-20- 3	0A	MAY 31/02
28-41-20- 3	1	MAY 31/02
28-41-20- 3	2	MAY 31/02
28-41-20- 3	3	MAY 31/02
28-41-20- 3	4	MAY 31/02
28-41-20- 3	5	MAY 31/02
28-41-30- 2	0	MAY 31/02
28-41-30- 2	1	MAY 31/02
28-41-30- 2	2	MAY 31/02
28-42-00	1	MAY 31/02
28-42-10- 2	0	MAY 31/02
28-42-10- 2	1	MAY 31/02

*THE ASTERISK INDICATES PAGES CHANGED OR ADDED BY THE CURRENT REVISION

PUMPS

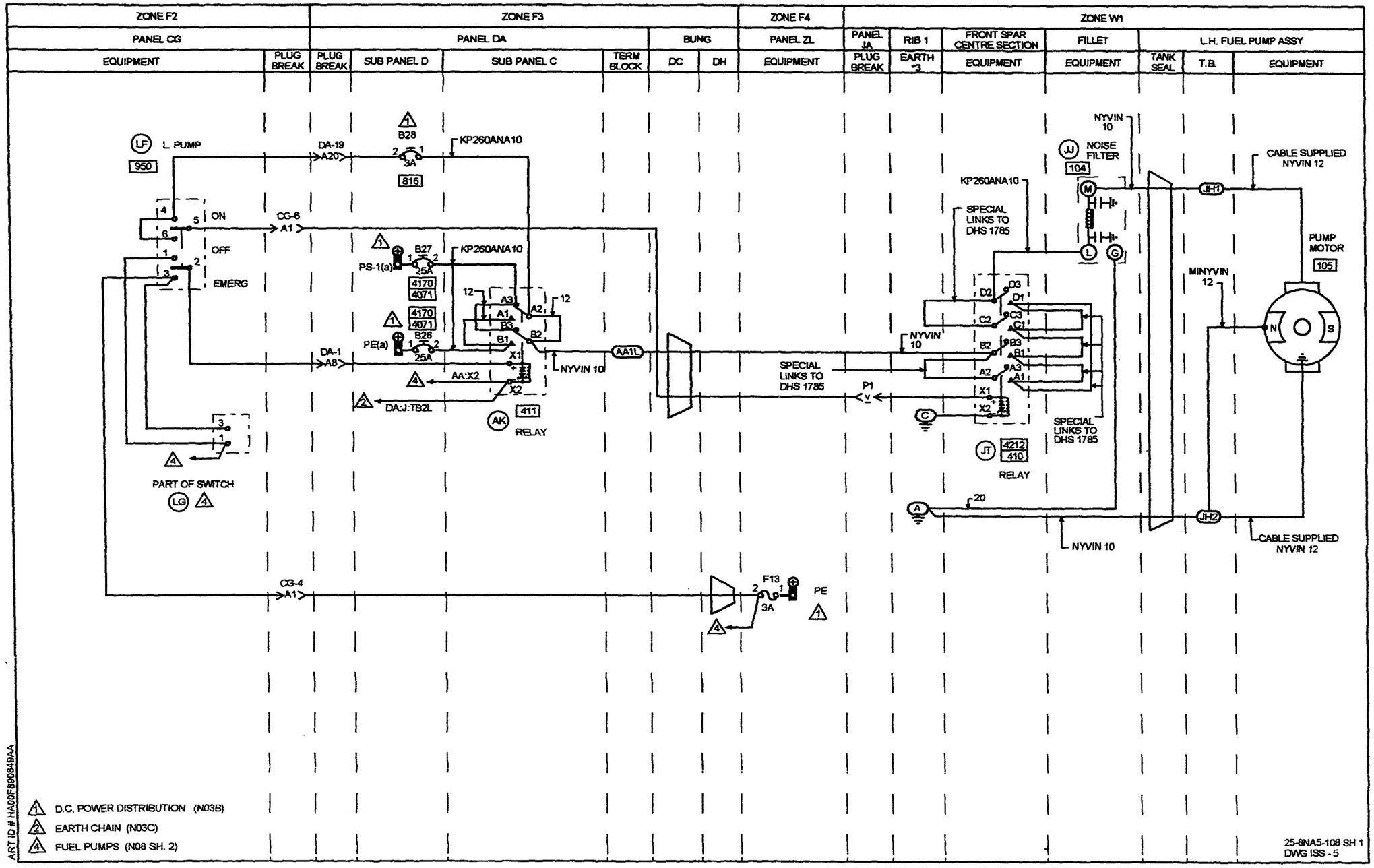
ZONE F2
ZONE F3
ZONE F4
ZONE W1
PANEL CG
PANEL DA
BUNG
PANEL ZL
PANEL JA
RIB 1
FRONT SPAR CENTRE SECTION
FILLET
L.H. FUEL PUMP ASSY
EQUIPMENT
PLUG BREAK
SUB PANEL D
SUB PANEL C
TERM BLOCK
DC
DH
EARTH #3
TANK SEAL
T.B.
L PUMP
950
ON
OFF
EMERG
CG-6
A1
DA-19
A20
B28
3A
816
KP260ANA10
B27
PS-1(a)
25A
4170
4071
B26
PE(a)
DA-1
A8
AA:X2
DA:J:TB2L
AA1L
NYVIN 10
411
RELAY
PART OF SWITCH
LG
CG-4
F13
3A
PE
NYVIN 10
NOISE FILTER
104
SPECIAL LINKS TO DHS 1785
P1
4212
410
RELAY
20
CABLE SUPPLIED NYVIN 12
JH1
JH2
PUMP MOTOR
105
MINYVIN 12
D.C. POWER DISTRIBUTION (N03B)
EARTH CHAIN (N03C)
FUEL PUMPS (N08 SH. 2)
ART ID # HA00F8B0649AA
25-8NA5-108 SH 1
DWG ISS - 5

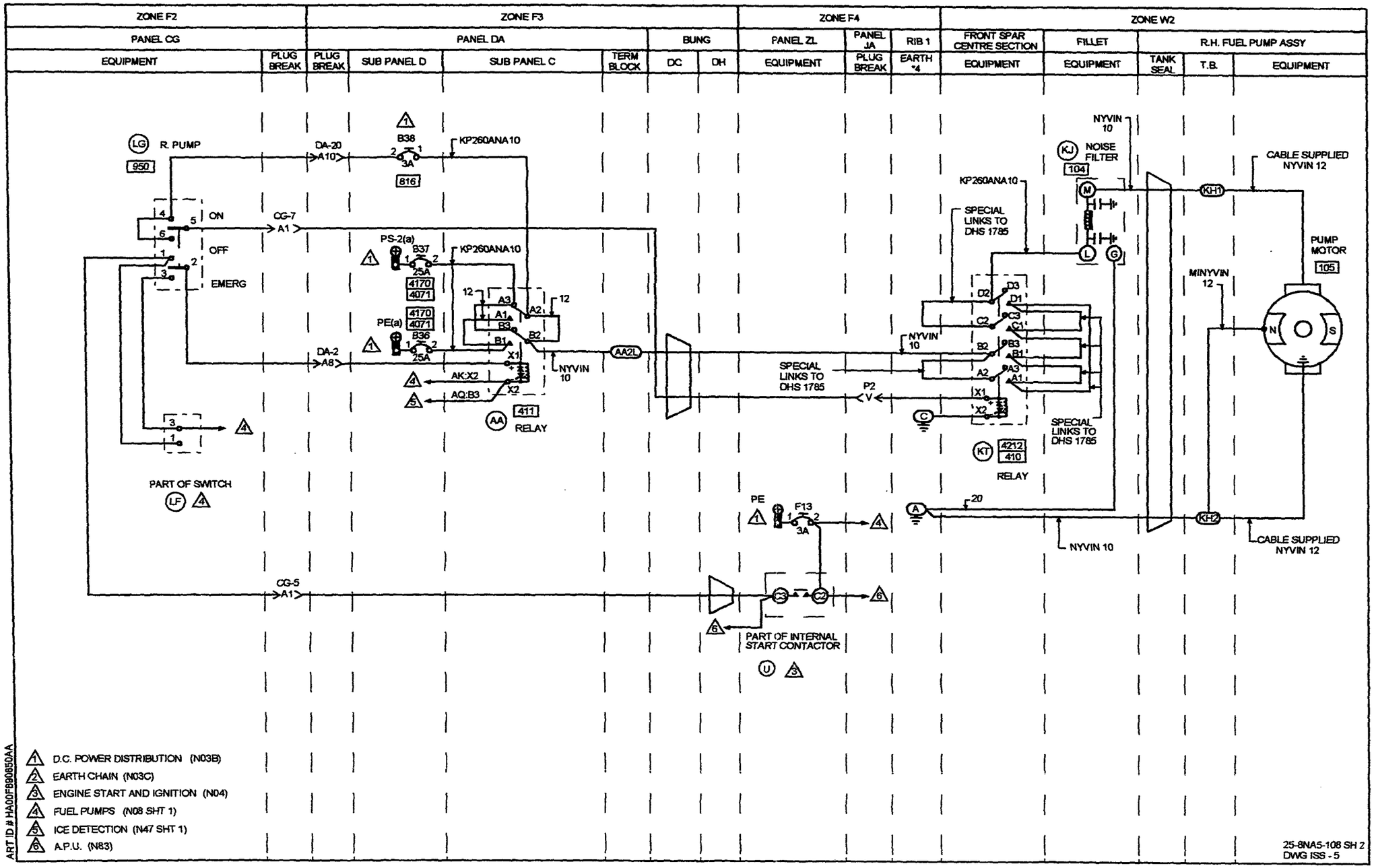
ZONE F2
ZONE F3
ZONE F4
ZONE W2
PANEL CG
PANEL DA
BUNG
PANEL ZL
PANEL JA
RIB 1
FRONT SPAR CENTRE SECTION
FILLET
R.H. FUEL PUMP ASSY
EQUIPMENT
PLUG BREAK
SUB PANEL D
SUB PANEL C
TERM BLOCK
DC
DH
EARTH *4
TANK SEAL
T.B.
R. PUMP
950
ON
OFF
EMERG
CG-7
A1
DA-20
A10
B38
3A
816
KP260ANA10
PS-2(a)
B37
25A
4170
4071
PE(a)
B36
DA-2
A8
AK:X2
AQ:B3
NYVIN 10
AA2L
411
RELAY
PART OF SWITCH
LF
PE
F13
3A
CG-5
A1
PART OF INTERNAL START CONTACTOR
U
NYVIN 10
NOISE FILTER
104
SPECIAL LINKS TO DHS 1785
P2
4212
410
RELAY
20
KH1
KH2
CABLE SUPPLIED NYVIN 12
MINYVIN 12
PUMP MOTOR
105
1 D.C. POWER DISTRIBUTION (N03B)
2 EARTH CHAIN (N03C)
3 ENGINE START AND IGNITION (N04)
4 FUEL PUMPS (N08 SHT 1)
5 ICE DETECTION (N47 SHT 1)
6 A.P.U. (N83)
ART ID # HA00F890850AA
25-8NA5-108 SH 2
DWG ISS - 5

IDENT	PART NUMBER	1234567 NOMENCLATURE	EFFECT FROM TO	UNITS PER ASSY
		FUEL PUMPS	091120	
	25-8NA5-108	WIRING DIAGRAM- (MOD 253149C)		RF
AA-DA	HWBUN1146S3B	.TERMINAL BLOCK- (VK0574)		1
AA-DAC	9330-4026	.RELAY- (VK6265)		1
AK-DAC	9330-4026	.RELAY- (VK6265)		1
B26-DAD	25-8NF2217-25	.CIRCUIT BREAKER-25A (VU0091) (ALTERED FROM 483-96TCK14-25A (VU0091))		1
B27-DAD	25-8NF2217-25	.CIRCUIT BREAKER-25A (VU0091) (ALTERED FROM 483-96TCK14-25A (VU0091))		1
B28-DAD	483TCG11J25-3A	.CIRCUIT BREAKER-3A (VU0091)		1
B36-DAD	25-8NF2217-25	.CIRCUIT BREAKER-25A (VU0091) (ALTERED FROM 483-96TCK14-25A (VU0091))		1
B37-DAD	25-8NF2217-25	.CIRCUIT BREAKER-25A (VU0091) (ALTERED FROM 483-96TCK14-25A (VU0091))		1
B38-DAD	483TCG11J25-3A	.CIRCUIT BREAKER-3A (VU0091)		1
CG4-P	MTC100YH1-003	.SHELL-PLUG (VK1010) (USED WITH WAFERS: TYPE A, MTC100KT1-1101 TYPE B, MTC100KT1-1102)		1
CG4-R	MTC100YH1-004	.SHELL-RECEPTACLE (VK1010) (USED WITH WAFERS: TYPE A, MTC100KT1-1103 TYPE B, MTC100KT1-1104)		1
CG5-P	MTC100YH1-003	.SHELL-PLUG (VK1010) (USED WITH WAFERS: TYPE A, MTC100KT1-1101 TYPE B, MTC100KT1-1102)		1
		MISSING ITEM NO. NOT APPLICABLE		

– ITEM NOT ILLUSTRATED

IDENT	PART NUMBER	1234567 NOMENCLATURE	EFFECT FROM TO	UNITS PER ASSY
CG5-R	MTC100YH1-004	.SHELL-RECEPTACLE (VK1010) (USED WITH WAFERS: TYPE A, MTC100KT1-1103 TYPE B, MTC100KT1-1104)		1
CG6-P	MTC100YH2-009	.SHELL-PLUG (VK1010) (USED WITH WAFERS: TYPE A, MTC100KT2-1101 TYPE B, MTC100KT2-1102)		1
CG6-R	MTC100YH2-010	.SHELL-RECEPTACLE (VK1010) (USED WITH WAFERS: TYPE A, MTC100KT2-1103 TYPE B, MTC100KT2-1104)		1
CG7-P	MTC100YH2-009	.SHELL-PLUG (VK1010) (USED WITH WAFERS: TYPE A, MTC100KT2-1101 TYPE B, MTC100KT2-1102)		1
CG7-R	MTC100YH2-010	.SHELL-RECEPTACLE (VK1010) (USED WITH WAFERS: TYPE A, MTC100KT2-1103 TYPE B, MTC100KT2-1104)		1
DA1-P	MTC100YH1-003	.SHELL-PLUG (VK1010) (USED WITH WAFERS: TYPE A, MTC100KT1-1101 TYPE B, MTC100KT1-1102)		1
DA1-R	MTC100YH1-004	.SHELL-RECEPTACLE (VK1010) (USED WITH WAFERS: TYPE A, MTC100KT1-1103 TYPE B, MTC100KT1-1104)		1
DA19-P	MTC100YH2-009	.SHELL-PLUG (VK1010) (USED WITH WAFERS: TYPE A, MTC100KT2-1101 TYPE B, MTC100KT2-1102)		1
DA19-R	MTC100YH2-010	.SHELL-RECEPTACLE (VK1010) (USED WITH WAFERS: TYPE A, MTC100KT2-1103 TYPE B, MTC100KT2-1104)		1
DA2-P	MTC100YH1-003	.SHELL-PLUG (VK1010) (USED WITH WAFERS: TYPE A, MTC100KT1-1101 TYPE B, MTC100KT1-1102)		1
		MISSING ITEM NO. NOT APPLICABLE		

– ITEM NOT ILLUSTRATED

IDENT	PART NUMBER	1234567 NOMENCLATURE	EFFECT FROM TO	UNITS PER ASSY
DA2-R	MTC100YH1-004	.SHELL-RECEPTACLE (VK1010) (USED WITH WAFERS: TYPE A, MTC100KT1-1103 TYPE B, MTC100KT1-1104)		1
DA20-P	MTC100YH2-009	.SHELL-PLUG (VK1010) (USED WITH WAFERS: TYPE A, MTC100KT2-1101 TYPE B, MTC100KT2-1102)		1
DA20-R	MTC100YH2-010	.SHELL-RECEPTACLE (VK1010) (USED WITH WAFERS: TYPE A, MTC100KT2-1103 TYPE B, MTC100KT2-1104)		1
DC	422254-8	.BUNG- (VK1793)		1
DH	422254-9	.BUNG- (VK1793)		1
F13-ZL	5920-99-0120075	.FUSE-3A (VK0657)		1
JH	HWBUN1177S2B	.TERMINAL BLOCK- (VK0574)		1
JJ	TF57160-1	.NOISE FILTER- (VK1659)		1
JT	9274-4024	.RELAY- (VK6265) (FOR SPARES PROCURE 9274-6205)		1
KH	HWBUN1177S2B	.TERMINAL BLOCK- (VK0574)		1
KJ	TF57160-1	.NOISE FILTER- (VK1659)		1
KT	9274-4024	.RELAY- (VK6265) (FOR SPARES PROCURE 9274-6205)		1
LF-CG	2TP1-1	.SWITCH- (VK6596) (PRE MOD 253210A)	091116	1
LF-CG	2TP1-1M	.SWITCH- (V91929) (OPT (VK6596)) (MOD 253210A)		1
LG-CG	2TP1-1	.SWITCH- (VK6596) (PRE MOD 253210A)	091116	1
		MISSING ITEM NO. NOT APPLICABLE		

– ITEM NOT ILLUSTRATED

IDENT	PART NUMBER	1234567 NOMENCLATURE	EFFECT FROM TO	UNITS PER ASSY
LG-CG	2TP1-1M	.SWITCH- (V91929) (OPT (VK6596)) (MOD 253210A)		1
P1-JA-P	BAEREF000004328	.CONNECTOR-SOCKET (6027-24-61SWCONDD) (VK1793)		1
P1-JA-R	BAEREF000003898	.CONNECTOR-PIN (6026-24-61PWCONDD) (VK1793)		1
P2-JA-P	BAEFER000004075	.CONNECTOR-SOCKET (6027-22-41SNCONDD) (VK1793)		1
P2-JA-R	BAEREF000004077	.CONNECTOR-PIN (6026-22-41PNCONDD) (VK1793)		1
U-ZL	A848MAS	.CONTACTOR- (V74063)		1
105-LH	2070C01	.FUEL PUMP- (VK6686) (PRE MOD 253185A)		1
105-LH	2070C11	.FUEL PUMP- (UNIT EXCHANGE ITEM) (VK6686) (MOD 253185A) (PRE MOD 253256A)		1
105-LH	2C40-2	.FUEL PUMP- (V26433) (MOD 253256A) (SB28-88-3256A		1
105-RH	2070C01	.FUEL PUMP- (VK6686) (PRE MOD 253185A)		1
105-RH	2070C11	.FUEL PUMP- (UNIT EXCHANGE ITEM) (VK6686) (MOD 253185A) (PRE MOD 253256A)		1
105-RH	2C40-2	.FUEL PUMP- (V26433) (MOD 253256A) (SB28-88-3256A)		1
		MISSING ITEM NO. NOT APPLICABLE		

– ITEM NOT ILLUSTRATED

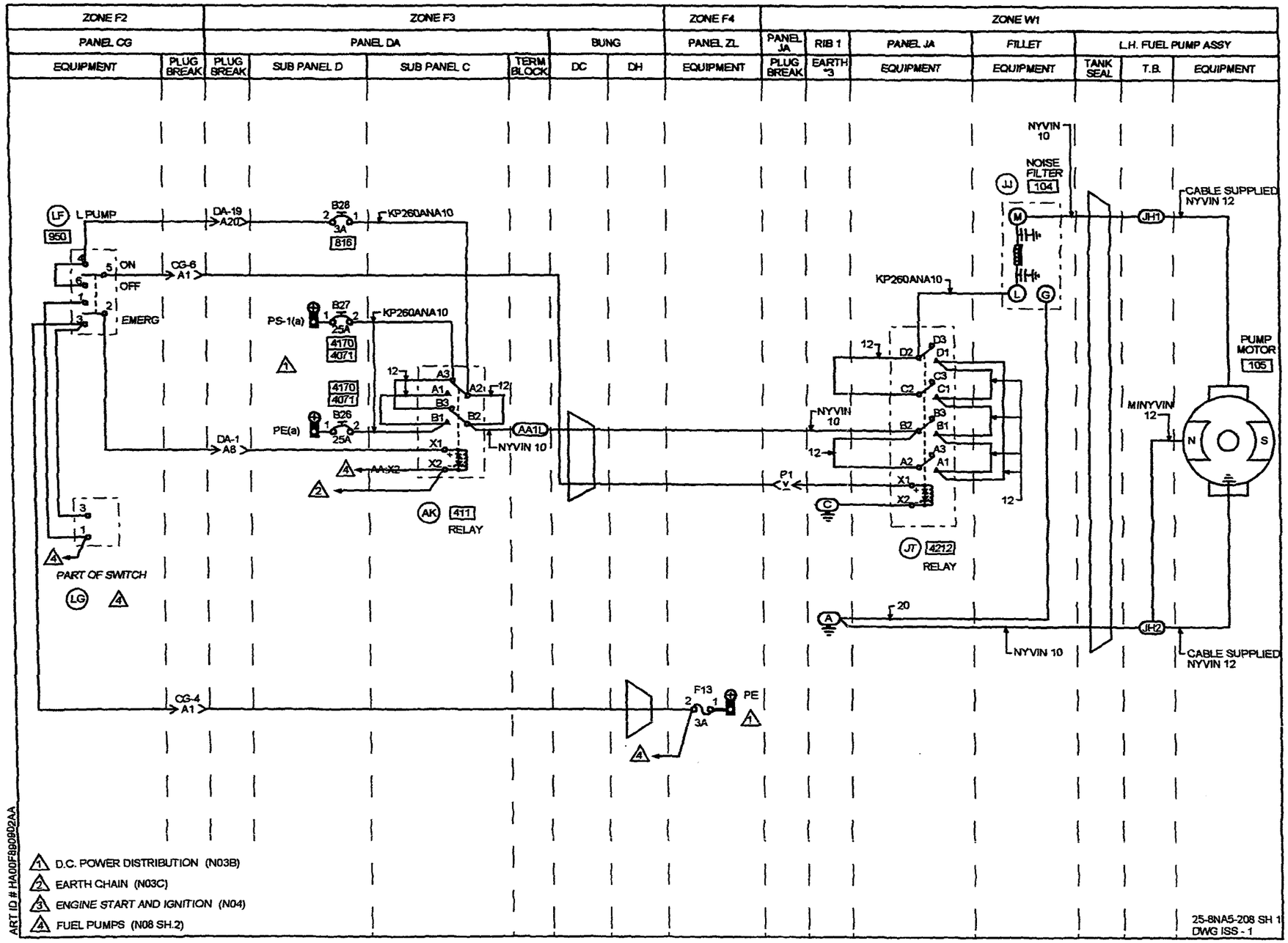
ZONE F2
ZONE F3
ZONE F4
ZONE W1
PANEL CG
PANEL DA
BUNG
PANEL ZL
PANEL JA
RIB 1
PANEL JA
FILLET
L.H. FUEL PUMP ASSY
EQUIPMENT
PLUG BREAK
PLUG BREAK
SUB PANEL D
SUB PANEL C
TERM BLOCK
DC
DH
EQUIPMENT
PLUG BREAK
EARTH *3
EQUIPMENT
EQUIPMENT
TANK SEAL
T.B.
EQUIPMENT
L PUMP
950
ON
OFF
EMERG
CG-6
A1
DA-19
A20
B28
3A
816
KP260ANA10
PS-1(a)
B27
25A
4170
4071
PE(a)
B26
25A
DA-1
A8
AA1L
NYVIN 10
AA-X2
411
RELAY
PART OF SWITCH
LG
CG-4
A1
F13
3A
PE
NYVIN 10
NOISE FILTER
104
KP260ANA10
4212
RELAY
NYVIN 10
CABLE SUPPLIED NYVIN 12
JH1
PUMP MOTOR
105
MINYVIN 12
JH2
NYVIN 10
CABLE SUPPLIED NYVIN 12
1 D.C. POWER DISTRIBUTION (N03B)
2 EARTH CHAIN (N03C)
3 ENGINE START AND IGNITION (N04)
4 FUEL PUMPS (N08 SH.2)
25-8NA5-208 SH 1
DWG ISS - 1
ART ID # HA00F8B0802AA

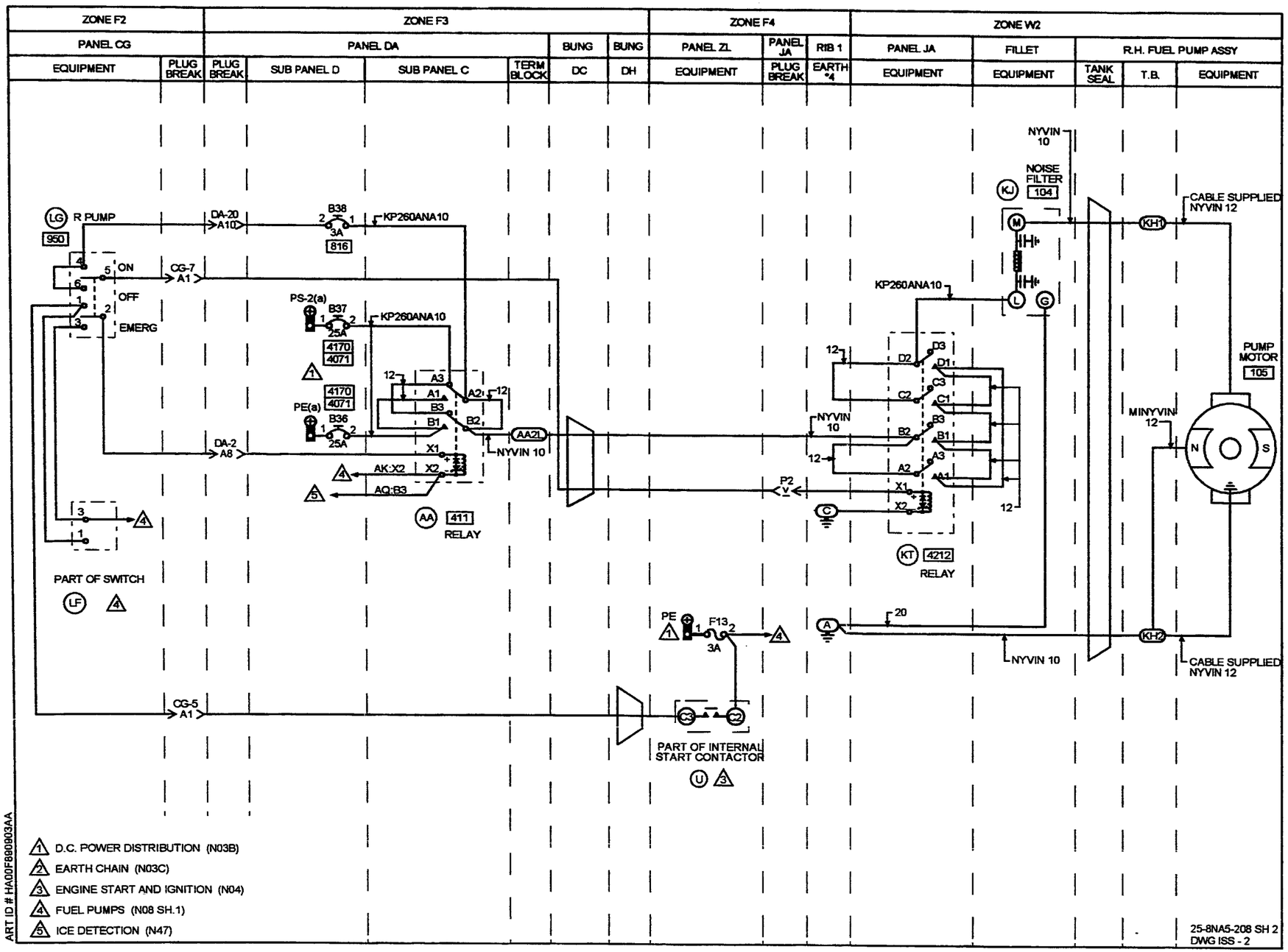
ZONE F2
ZONE F3
ZONE F4
ZONE W2
PANEL CG
PANEL DA
BUNG
BUNG
PANEL ZL
PANEL JA
RIB 1
PANEL JA
FILLET
R.H. FUEL PUMP ASSY
EQUIPMENT
PLUG BREAK
PLUG BREAK
SUB PANEL D
SUB PANEL C
TERM BLOCK
DC
DH
EQUIPMENT
PLUG BREAK
EARTH *4
EQUIPMENT
EQUIPMENT
TANK SEAL
T.B.
EQUIPMENT
LG
R PUMP
950
DA-20
A10
B38
3A
816
KP260ANA10
CG-7
A1
ON
OFF
EMERG
PS-2(a)
B37
25A
4170
4071
PE(a)
B36
25A
DA-2
A8
AK:X2
AQ:B3
AA
411
RELAY
AA2L
NYVIN 10
PART OF SWITCH
LF
PE
F13
3A
CG-5
A1
PART OF INTERNAL START CONTACTOR
U
NYVIN 10
NOISE FILTER
104
KJ
KP260ANA10
NYVIN 10
KT
4212
RELAY
P2
NYVIN 10
CABLE SUPPLIED NYVIN 12
KH1
KH2
PUMP MOTOR
105
MINYVIN 12
N
S
1 D.C. POWER DISTRIBUTION (N03B)
2 EARTH CHAIN (N03C)
3 ENGINE START AND IGNITION (N04)
4 FUEL PUMPS (N08 SH.1)
5 ICE DETECTION (N47)
ART ID # HA00F880803AA
25-8NA5-208 SH 2
DWG ISS - 2

IDENT	PART NUMBER	1234567 NOMENCLATURE	EFFECT FROM TO	UNITS PER ASSY
		FUEL PUMPS	121151	
	25-8NA5-208	WIRING DIAGRAM- (MOD 253084A)		RF
AA-DA	HWBUN1146S3B	.TERMINAL BLOCK- (VK0574)		1
AA-DAC	9330-4026	.RELAY- (VK6265)		1
AK-DAC	9330-4026	.RELAY- (VK6265)		1
B26-DAD	25-8NF2217-25	.CIRCUIT BREAKER-25A (VU0091) (ALTERED FROM 483-96TCK14-25A (VU0091))		1
B27-DAD	25-8NF2217-25	.CIRCUIT BREAKER-25A (VU0091) (ALTERED FROM 483-96TCK14-25A (VU0091))		1
B28-DAD	483TCG11J25-3A	.CIRCUIT BREAKER-3A (VU0091)		1
B36-DAD	25-8NF2217-25	.CIRCUIT BREAKER-25A (VU0091) (ALTERED FROM 483-96TCK14-25A (VU0091))		1
B37-DAD	25-8NF2217-25	.CIRCUIT BREAKER-25A (VU0091) (ALTERED FROM 483-96TCK14-25A (VU0091))		1
B38-DAD	483TCG11J25-3A	.CIRCUIT BREAKER-3A (VU0091)		1
CG4-P	MTC100YH1-003	.SHELL-PLUG (VK1010) (USED WITH WAFERS: TYPE A, MTC100KT1-1101 TYPE B, MTC100KT1-1102)		1
CG4-R	MTC100YH1-004	.SHELL-RECEPTACLE (VK1010) (USED WITH WAFERS: TYPE A, MTC100KT1-1103 TYPE B, MTC100KT1-1104)		1
CG5-P	MTC100YH1-003	.SHELL-PLUG (VK1010) (USED WITH WAFERS: TYPE A, MTC100KT1-1101 TYPE B, MTC100KT1-1102)		1
		MISSING ITEM NO. NOT APPLICABLE		

– ITEM NOT ILLUSTRATED

IDENT	PART NUMBER	1234567 NOMENCLATURE	EFFECT FROM TO	UNITS PER ASSY
CG5-R	MTC100YH1-004	.SHELL-RECEPTACLE (VK1010) (USED WITH WAFERS: TYPE A, MTC100KT1-1103 TYPE B, MTC100KT1-1104)		1
CG6-P	MTC100YH2-009	.SHELL-PLUG (VK1010) (USED WITH WAFERS: TYPE A, MTC100KT2-1101 TYPE B, MTC100KT2-1102)		1
CG6-R	MTC100YH2-010	.SHELL-RECEPTACLE (VK1010) (USED WITH WAFERS: TYPE A, MTC100KT2-1103 TYPE B, MTC100KT2-1104)		1
CG7-P	MTC100YH2-009	.SHELL-PLUG (VK1010) (USED WITH WAFERS: TYPE A, MTC100KT2-1101 TYPE B, MTC100KT2-1102)		1
CG7-R	MTC100YH2-010	.SHELL-RECEPTACLE (VK1010) (USED WITH WAFERS: TYPE A, MTC100KT2-1103 TYPE B, MTC100KT2-1104)		1
DA1-P	MTC100YH1-003	.SHELL-PLUG (VK1010) (USED WITH WAFERS: TYPE A, MTC100KT1-1101 TYPE B, MTC100KT1-1102)		1
DA1-R	MTC100YH1-004	.SHELL-RECEPTACLE (VK1010) (USED WITH WAFERS: TYPE A, MTC100KT1-1103 TYPE B, MTC100KT1-1104)		1
DA19-P	MTC100YH1-003	.SHELL-PLUG (VK1010) (USED WITH WAFERS: TYPE A, MTC100KT1-1101 TYPE B, MTC100KT1-1102)		1
DA19-R	MTC100YH1-004	.SHELL-RECEPTACLE (VK1010) (USED WITH WAFERS: TYPE A, MTC100KT1-1103 TYPE B, MTC100KT1-1104)		1
DA2-P	MTC100YH1-003	.SHELL-PLUG (VK1010) (USED WITH WAFERS: TYPE A, MTC100KT1-1101 TYPE B, MTC100KT1-1102)		1
		MISSING ITEM NO. NOT APPLICABLE		

– ITEM NOT ILLUSTRATED

IDENT	PART NUMBER	1234567 NOMENCLATURE	EFFECT FROM TO	UNITS PER ASSY
DA2-R	MTC100YH1-004	.SHELL-RECEPTACLE (VK1010) (USED WITH WAFERS: TYPE A, MTC100KT1-1103 TYPE B, MTC100KT1-1104)		1
DA20-P	MTC100YH2-009	.SHELL-PLUG (VK1010) (USED WITH WAFERS: TYPE A, MTC100KT2-1101 TYPE B, MTC100KT2-1102)		1
DA20-R	MTC100YH2-010	.SHELL-RECEPTACLE (VK1010) (USED WITH WAFERS: TYPE A, MTC100KT2-1103 TYPE B, MTC100KT2-1104)		1
DC	422254-8	.BUNG- (VK1793)		1
DH	422254-9	.BUNG- (VK1793)		1
F13-ZL	5920-99-0120075	.FUSE-3A (VK0657)		1
GG5-P	MTC100YH1-003	.SHELL-PLUG (VK1010) (USED WITH WAFERS: TYPE A, MTC100KT1-1101 TYPE B, MTC100KT1-1102)		1
JH	HWBUN1177S2B	.TERMINAL BLOCK- (VK0574)		1
JJ	TF57160-1	.NOISE FILTER- (VK1659)		1
JT	9274-4024	.RELAY- (VK6265) (FOR SPARES PROCURE 9274-6205)		1
KH	HWBUN1177S2B	.TERMINAL BLOCK- (VK0574)		1
KJ	TF57160-1	.NOISE FILTER- (VK1659)		1
KT	9274-4024	.RELAY- (VK6265) (FOR SPARES PROCURE 9274-6205)		1
LF-CG	2TP1-1M	.SWITCH- (V91929) (OPT (VK6596))		1
LG-CG	2TP1-1M	.SWITCH- (V91929) (OPT (VK6596))		1
		MISSING ITEM NO. NOT APPLICABLE		

– ITEM NOT ILLUSTRATED

IDENT	PART NUMBER	1234567 NOMENCLATURE	EFFECT FROM TO	UNITS PER ASSY
P1-JA-P	BAEREF000004328	.CONNECTOR-SOCKET (6027-24-61SWCONDD) (VK1793)		1
P1-JA-R	BAEREF000003898	.CONNECTOR-PIN (6026-24-61PWCONDD) (VK1793)		1
P2-JA-P	BAEREF000004075	.CONNECTOR-SOCKET (6027-22-41SNCONDD) (VK1793)		1
P2-JA-R	BAEREF000004077	.CONNECTOR-PIN (6026-22-41PNCONDD) (VK1793)		1
U-ZL	A848MAS	.CONTACTOR- (V74063)		1
105-LH	2070C01	.FUEL PUMP- (VK6686) (PRE MOD 253185A)		1
105-LH	2070C11	.FUEL PUMP- (UNIT EXCHANGE ITEM) (VK6686) (MOD 253185A) (PRE MOD 253256A)		1
105-LH	2C40-2	.FUEL PUMP- (V26433) (MOD 253256A) (SB28-88-3256A)		1
105-RH	2070C01	.FUEL PUMP- (VK6686) (PRE MOD 253185A)		1
105-RH	2070C11	.FUEL PUMP- (UNIT EXCHANGE ITEM) (VK6686) (MOD 253185A) (PRE MOD 253256A)		1
105-RH	2C40-2	.FUEL PUMP- (V26433) (MOD 253256A) (SB28-88-3256A)		1
		MISSING ITEM NO. NOT APPLICABLE		

- ITEM NOT ILLUSTRATED

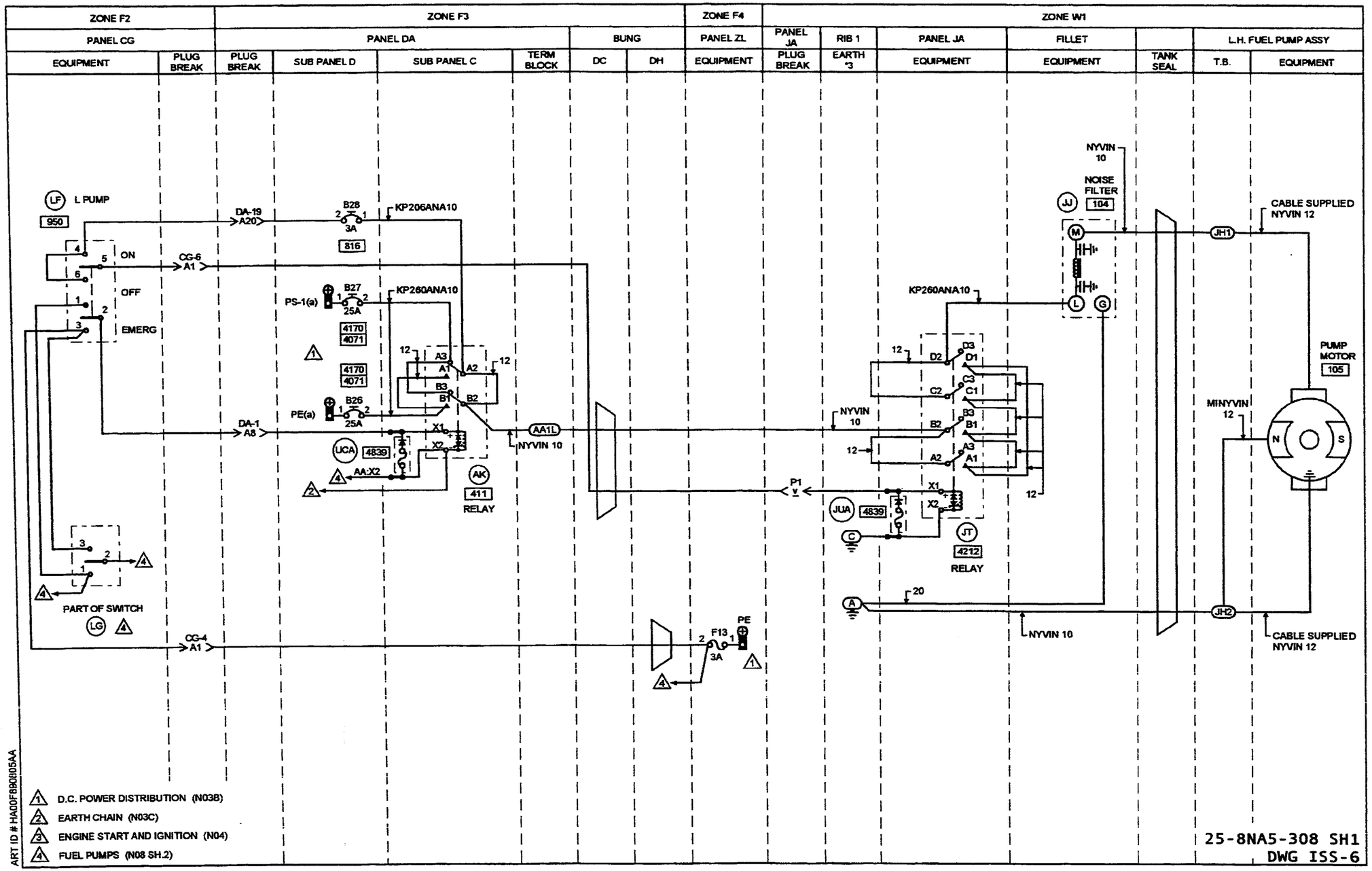
ZONE F2
ZONE F3
ZONE F4
ZONE W1
PANEL CG
PANEL DA
BUNG
PANEL ZL
PANEL JA
RIB 1
PANEL JA
FILLET
L.H. FUEL PUMP ASSY
EQUIPMENT
PLUG BREAK
PLUG BREAK
SUB PANEL D
SUB PANEL C
TERM BLOCK
DC
DH
EQUIPMENT
PLUG BREAK
EARTH *3
EQUIPMENT
EQUIPMENT
TANK SEAL
T.B.
EQUIPMENT
LF
L PUMP
950
ON
OFF
EMERG
CG-6
A1
DA-19
A20
B28
3A
816
KP206ANA10
PS-1(a)
B27
25A
4170
4071
KP260ANA10
PE(a)
B26
25A
DA-1
A8
UCA
4839
AA:X2
AK
411
RELAY
AA1L
NYVIN 10
PART OF SWITCH
LG
CG-4
A1
F13
3A
PE
P1
JUA
4839
JT
4212
RELAY
NYVIN
10
NOISE
FILTER
104
JJ
KP260ANA10
NYVIN 10
JH1
CABLE SUPPLIED
NYVIN 12
PUMP
MOTOR
105
MINYVIN
12
JH2
NYVIN 10
CABLE SUPPLIED
NYVIN 12
D.C. POWER DISTRIBUTION (N03B)
EARTH CHAIN (N03C)
ENGINE START AND IGNITION (N04)
FUEL PUMPS (N08 SH.2)
ART ID # HA00F690005AA
25-8NA5-308 SH1
DWG ISS-6

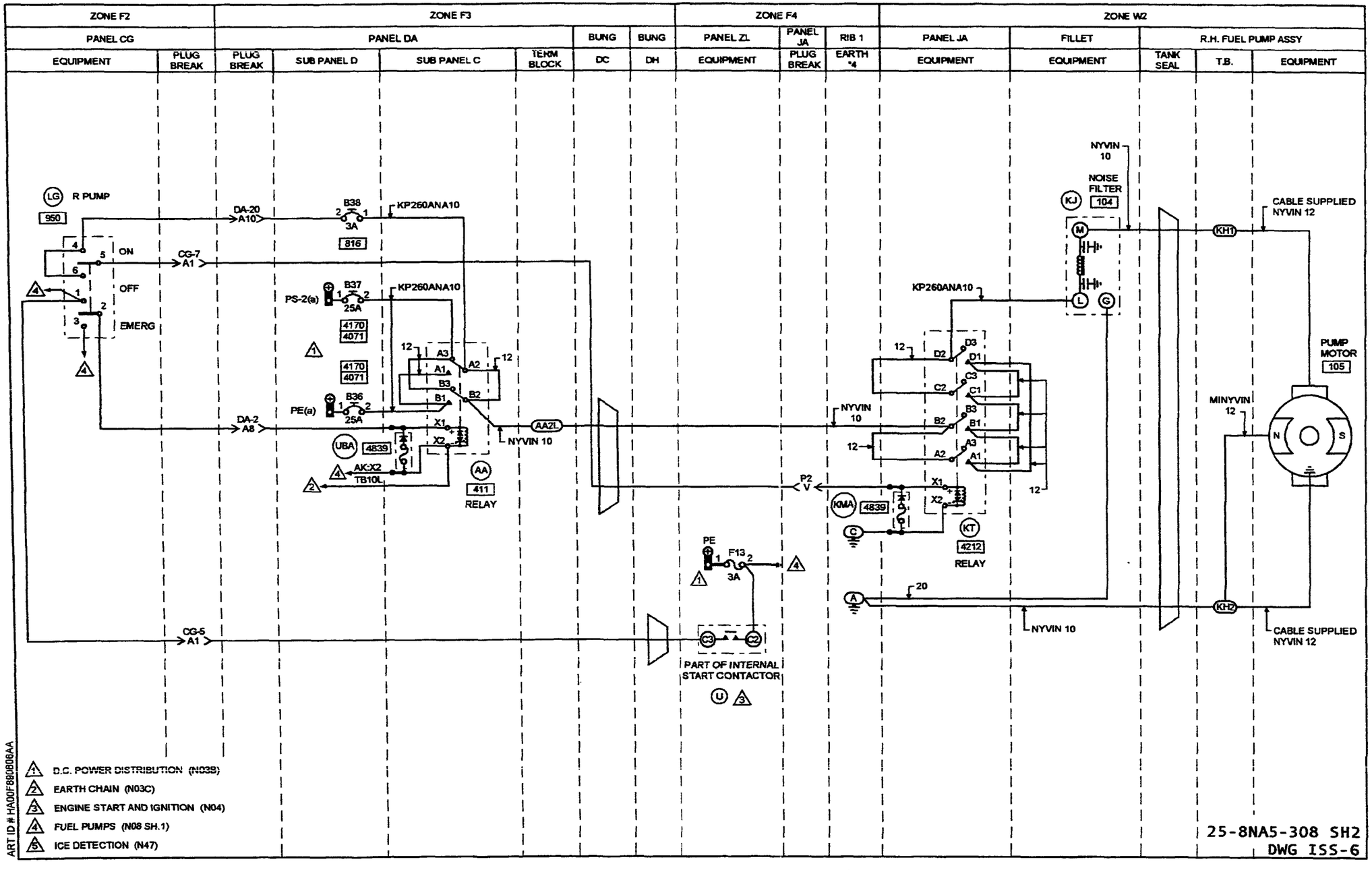
ZONE F2
ZONE F3
ZONE F4
ZONE W2
PANEL CG
PANEL DA
BUNG
BUNG
PANEL ZL
PANEL JA
RIB 1
PANEL JA
FILLET
R.H. FUEL PUMP ASSY
EQUIPMENT
PLUG BREAK
PLUG BREAK
SUB PANEL D
SUB PANEL C
TERM BLOCK
DC
DH
EQUIPMENT
PLUG BREAK
EARTH *4
EQUIPMENT
EQUIPMENT
TANK SEAL
T.B.
EQUIPMENT
R PUMP
950
ON
OFF
EMERG
CG-7
A1
DA-20
A10
B38
3A
816
KP260ANA10
PS-2(a)
B37
25A
4170
4071
PE(a)
B36
25A
DA-2
A8
UBA
4839
AK-X2
TB10L
AA
411
RELAY
AA2L
NYVIN 10
CG-5
A1
PE
F13
3A
PART OF INTERNAL
START CONTACTOR
NYVIN
10
NOISE
FILTER
104
KJ
KH1
CABLE SUPPLIED
NYVIN 12
PUMP
MOTOR
105
MINYVIN
12
P2
V
KMA
4839
KT
4212
RELAY
20
KH2
CABLE SUPPLIED
NYVIN 12
D.C. POWER DISTRIBUTION (N03B)
EARTH CHAIN (N03C)
ENGINE START AND IGNITION (N04)
FUEL PUMPS (N08 SH.1)
ICE DETECTION (N47)
ART ID # HA00F080806AA
25-8NA5-308 SH2
DWG ISS-6

IDENT	PART NUMBER	1234567 NOMENCLATURE	EFFECT FROM TO	UNITS PER ASSY
		FUEL PUMPS	152276	
	25-8NA5-308	WIRING DIAGRAM- (MOD 253214A) (MOD 25F505A)		RF
AA-DA	HWBUN1146S3B	.TERMINAL BLOCK- (VK0574)		1
AA-DAC	9330-4026	.RELAY- (VK6265)		1
AK-DAC	9330-4026	.RELAY- (VK6265)		1
B26-DAD	25-8NF2217-25	.CIRCUIT BREAKER-25AMP (ALTERED FROM 483-96TCK14-25A (VU0091))		1
B27-DAD	25-8NF2217-25	.CIRCUIT BREAKER-25AMP (ALTERED FROM 483-96TCK14-25A (VU0091))		1
B28-DAD	483TCG11J25-3A	.CIRCUIT BREAKER-3AMP (VU0091)		1
B36-DAD	25-8NF2217-25	.CIRCUIT BREAKER-25AMP (ALTERED FROM 483-96TCK14-25A (VU0091))		1
B37-DAD	25-8NF2217-25	.CIRCUIT BREAKER-25AMP (ALTERED FROM 483-96TCK14-25A (VU0091))		1
B38-DAD	483TCG11J25-3A	.CIRCUIT BREAKER-3AMP (VU0091)		1
CG4-P	MTC100YH1-003	.SHELL-PLUG (VK1010) (USED WITH WAFERS: TYPE A, MTC100KT1-1101 TYPE B, MTC100KT1-1102)	152254	1
CG4-P	MTC100YH1-003	.SHELL-PLUG (VK1010) (USED WITH INSERT: MTC100YC1-005)	255276	1
CG4-R	MTC100YH1-004	.SHELL-RECEPTACLE (VK1010) (USED WITH WAFERS: TYPE A, MTC100KT1-1103 TYPE B, MTC100KT1-1104)	152254	1
CG4-R	MTC100YH1-004	.SHELL-RECEPTACLE (VK1010) (USED WITH INSERT: MTC100YC1-006)	255276	1
		MISSING ITEM NO. NOT APPLICABLE		

- ITEM NOT ILLUSTRATED

IDENT	PART NUMBER	1234567 NOMENCLATURE	EFFECT FROM TO	UNITS PER ASSY
CG5-P	MTC100YH1-003	.SHELL-PLUG (VK1010) (USED WITH WAFERS: TYPE A, MTC100KT1-1101 TYPE B, MTC100KT1-1102)	152254	1
CG5-P	MTC100YH1-003	.SHELL-PLUG (VK1010) (USED WITH INSERT: MTC100YC1-005)	255276	1
CG5-R	MTC100YH1-004	.SHELL-RECEPTACLE (VK1010) (USED WITH WAFERS: TYPE A, MTC100KT1-1103 TYPE B, MTC100KT1-1104)	152254	1
CG5-R	MTC100YH1-004	.SHELL-RECEPTACLE (VK1010) (USED WITH INSERT: MTC100YC1-006)	255276	1
CG6-P	MTC100YH2-009	.SHELL-PLUG (VK1010) (USED WITH WAFERS: TYPE A, MTC100KT2-1101 TYPE B, MTC100KT2-1102)	152254	1
CG6-P	MTC100YH2-009	.SHELL-PLUG (VK1010) (USED WITH INSERTS: PRIMARY MTC100YC1-001 SECONDARY MTC100YC1-002)	255276	1
CG6-R	MTC100YH2-010	.SHELL-RECEPTACLE (VK1010) (USED WITH WAFERS: TYPE A, MTC100KT2-1103 TYPE B, MTC100KT2-1104)	152254	1
CG6-R	MTC100YH2-010	.SHELL-RECEPTACLE (VK1010) (USED WITH INSERTS: PRIMARY MTC100YC1-003 SECONDARY MTC100YC1-004)	255276	1
CG7-P	MTC100YH2-009	.SHELL-PLUG (VK1010) (USED WITH WAFERS: TYPE A, MTC100KT2-1101 TYPE B, MTC100KT2-1102)	152254	1
CG7-P	MTC100YH2-009	.SHELL-PLUG (VK1010) (USED WITH INSERTS: PRIMARY MTC100YC1-001 SECONDARY MTC100YC1-002)	255276	1
		MISSING ITEM NO. NOT APPLICABLE		

– ITEM NOT ILLUSTRATED

IDENT	PART NUMBER	1234567 NOMENCLATURE	EFFECT FROM TO	UNITS PER ASSY
CG7-R	MTC100YH2-010	.SHELL-RECEPTACLE (VK1010) (USED WITH WAFERS: TYPE A, MTC100KT2-1103 TYPE B, MTC100KT2-1104)	152254	1
CG7-R	MTC100YH2-010	.SHELL-RECEPTACLE (VK1010) (USED WITH INSERTS: PRIMARY MTC100YC1-003 SECONDARY MTC100YC1-004)	255276	1
DA1-P	MTC100YH1-003	.SHELL-PLUG (VK1010) (USED WITH WAFERS: TYPE A, MTC100KT1-1101 TYPE B, MTC100KT1-1102)	152254	1
DA1-P	MTC100YH1-003	.SHELL-PLUG (VK1010) (USED WITH INSERT: MTC100YC1-005)	255276	1
DA1-R	MTC100YH1-004	.SHELL-RECEPTACLE (VK1010) (USED WITH WAFERS: TYPE A, MTC100KT1-1103 TYPE B, MTC100KT1-1104)	152254	1
DA1-R	MTC100YH1-004	.SHELL-RECEPTACLE (VK1010) (USED WITH INSERT: MTC100YC1-006)	255276	1
DA19-P	MTC100YH2-009	.SHELL-PLUG (VK1010) (USED WITH WAFERS: TYPE A, MTC100KT2-1101 TYPE B, MTC100KT2-1102)	152254	1
DA19-P	MTC100YH2-009	.SHELL-PLUG (VK1010) (USED WITH INSERTS: PRIMARY MTC100YC1-001 SECONDARY MTC100YC1-002)	255276	1
DA19-R	MTC100YH2-010	.SHELL-RECEPTACLE (VK1010) (USED WITH WAFERS: TYPE A, MTC100KT2-1103 TYPE B, MTC100KT2-1104)	152254	1
DA19-R	MTC100YH2-010	.SHELL-RECEPTACLE (VK1010) (USED WITH INSERTS: PRIMARY MTC100YC1-003 SECONDARY MTC100YC1-004)	255276	1

MISSING ITEM NO. NOT APPLICABLE

— ITEM NOT ILLUSTRATED

IDENT	PART NUMBER	1234567 NOMENCLATURE	EFFECT FROM TO	UNITS PER ASSY
DA2-P	MTC100YH1-003	.SHELL-PLUG (VK1010) (USED WITH WAFERS: TYPE A, MTC100KT1-1101 TYPE B, MTC100KT1-1102)	152254	1
DA2-P	MTC100YH1-003	.SHELL-PLUG (VK1010) (USED WITH INSERT: MTC100YC1-005)	255276	1
DA2-R	MTC100YH1-004	.SHELL-RECEPTACLE (VK1010) (USED WITH WAFERS: TYPE A, MTC100KT1-1103 TYPE B, MTC100KT1-1104)	152254	1
DA2-R	MTC100YH1-004	.SHELL-RECEPTACLE (VK1010) (USED WITH INSERT: MTC100YC1-006)	255276	1
DA20-P	MTC100YH2-009	.SHELL-PLUG (VK1010) (USED WITH WAFERS: TYPE A, MTC100KT2-1101 TYPE B, MTC100KT2-1102)	152254	1
DA20-P	MTC100YH2-009	.SHELL-PLUG (VK1010) (USED WITH INSERTS: PRIMARY MTC100YC1-001 SECONDARY MTC100YC1-002)	255276	1
DA20-R	MTC100YH2-010	.SHELL-RECEPTACLE (VK1010) (USED WITH WAFERS: TYPE A, MTC100KT2-1103 TYPE B, MTC100KT2-1104)	152254	1
DA20-R	MTC100YH2-010	.SHELL-RECEPTACLE (VK1010) (USED WITH INSERTS: PRIMARY MTC100YC1-003 SECONDARY MTC100YC1-004)	255276	1
DC	422254-8	.BUNG- (VK1793)		1
DH	422254-9	.BUNG- (VK1793)		1
F13-ZL	5920-99-0120075	.FUSE-3AMP (VK0657)		1
JH	HWBUN1177S2B	.TERMINAL BLOCK- (VK0574)		1
JJ	TF57160-1	.NOISE FILTER- (VK1659)		1
JT-JA	9274-6205	.RELAY- (VK6265)		1
		MISSING ITEM NO. NOT APPLICABLE		

– ITEM NOT ILLUSTRATED

IDENT	PART NUMBER	1234567 NOMENCLATURE	EFFECT FROM TO	UNITS PER ASSY
KH	HWBUN1177S2B	.TERMINAL BLOCK- (VK0574)		1
KJ	TF57160-1	.NOISE FILTER- (VK1659)		1
KT-JA	9274-6205	.RELAY- (VK6265)		1
LF-CG	2TP1-1	.SWITCH- (VK6596)		1
LG-CG	2TP1-1	.SWITCH- (VK6596)		1
P1-JA-P	BAEREF000004328	.CONNECTOR-SOCKET (6027-24-61SWCONDD (VK1793))		1
P1-JA-R	BAEREF000003898	.CONNECTOR-PIN (6026-24-61PWCONDD (VK1793))		1
P2-JA-P	BAEREF000004075	.CONNECTOR-SOCKET (6027-22-41SNCONDD (VK1793))		1
P2-JA-R	BAEREF000004077	.CONNECTOR-PIN (6026-22-41PNCONDD (VK1793))		1
U-ZL	A848MAS	.CONTACTOR- (V74063)		1
105-LH	2C40-2	.FUEL PUMP- (V26433) (POST SB28-88) (MOD 253256A)		1
105-RH	2C40-2	.FUEL PUMP- (V26433) (POST SB28-88) (MOD 253256A)		1
		MISSING ITEM NO. NOT APPLICABLE		

– ITEM NOT ILLUSTRATED

INDICATING

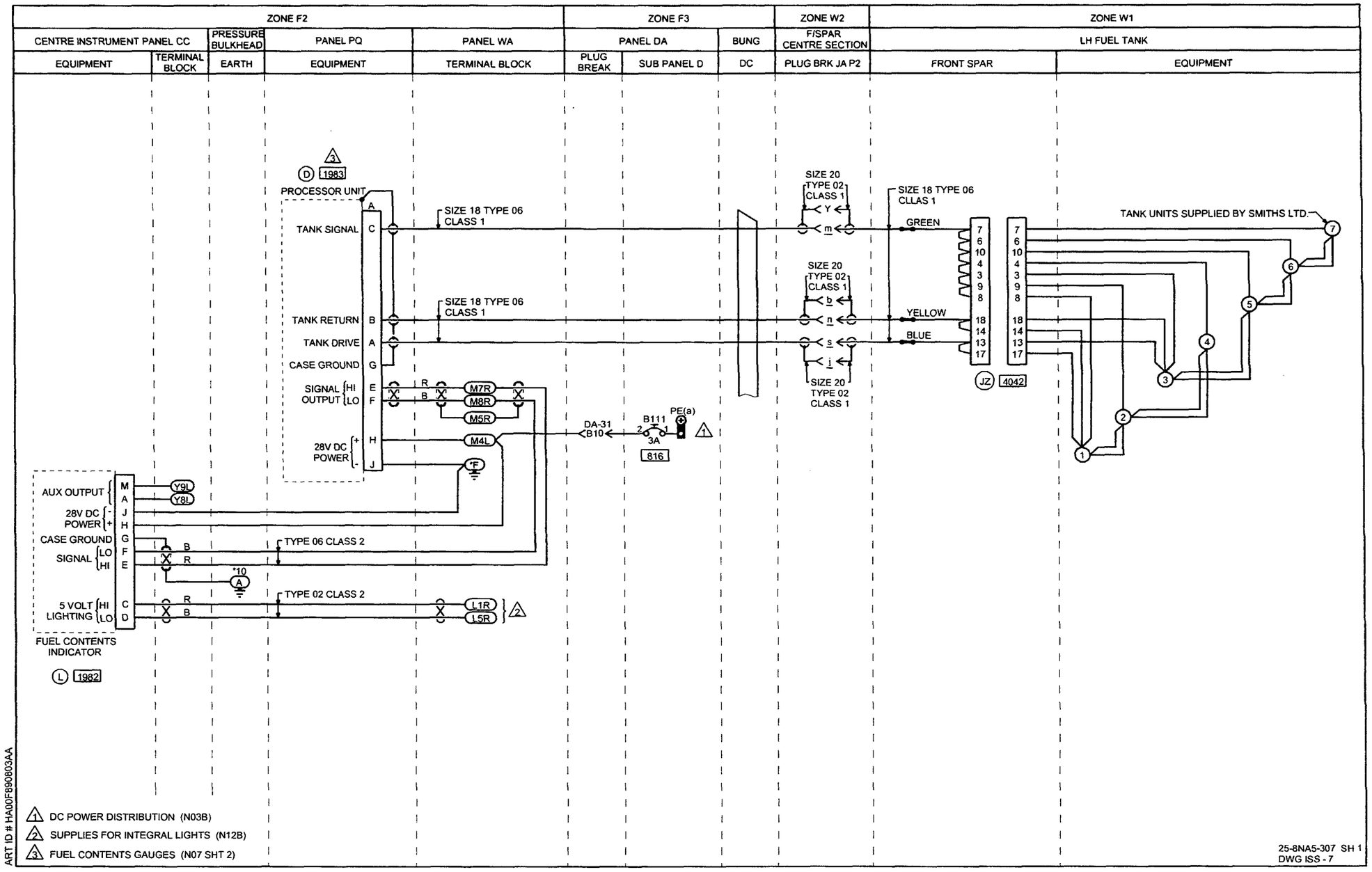
ZONE F2
ZONE F3
ZONE W2
ZONE W1
CENTRE INSTRUMENT PANEL CC
PRESSURE BULKHEAD
PANEL PQ
PANEL WA
PANEL DA
BUNG
F/SPAR CENTRE SECTION
LH FUEL TANK
EQUIPMENT
TERMINAL BLOCK
EARTH
EQUIPMENT
TERMINAL BLOCK
PLUG BREAK
SUB PANEL D
DC
PLUG BRK JA P2
FRONT SPAR
EQUIPMENT
PROCESSOR UNIT
TANK SIGNAL
TANK RETURN
TANK DRIVE
CASE GROUND
SIGNAL OUTPUT
28V DC POWER
SIZE 18 TYPE 06 CLASS 1
SIZE 20 TYPE 02 CLASS 1
SIZE 18 TYPE 06 CLLAS 1
GREEN
YELLOW
BLUE
TANK UNITS SUPPLIED BY SMITHS LTD.
M7R
M8R
M5R
M4L
DA-31 B10
B111
3A
816
PE(a)
AUX OUTPUT
Y9L
Y8L
CASE GROUND
SIGNAL
TYPE 06 CLASS 2
TYPE 02 CLASS 2
5 VOLT LIGHTING
L1R
L5R
FUEL CONTENTS INDICATOR
1983
1982
4042
DC POWER DISTRIBUTION (N03B)
SUPPLIES FOR INTEGRAL LIGHTS (N12B)
FUEL CONTENTS GAUGES (N07 SHT 2)
25-8NA5-307 SH 1
DWG ISS - 7
ART ID # HA00F890803AA

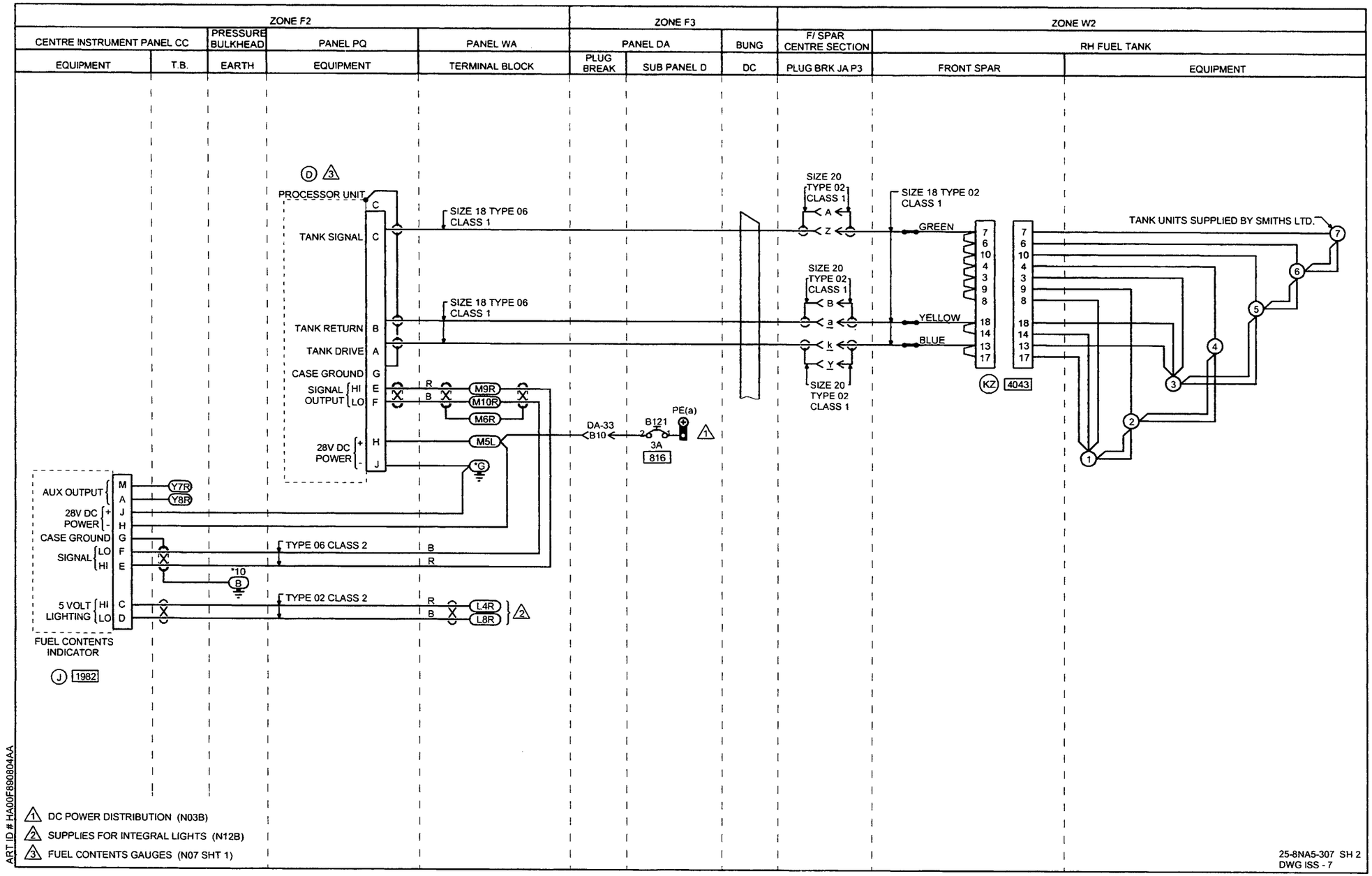
ZONE F2
ZONE F3
ZONE W2
CENTRE INSTRUMENT PANEL CC
PRESSURE BULKHEAD
PANEL PQ
PANEL WA
PANEL DA
BUNG
F/ SPAR CENTRE SECTION
RH FUEL TANK
EQUIPMENT
T.B.
EARTH
EQUIPMENT
TERMINAL BLOCK
PLUG BREAK
SUB PANEL D
DC
PLUG BRK JA P3
FRONT SPAR
EQUIPMENT
PROCESSOR UNIT
TANK SIGNAL
TANK RETURN
TANK DRIVE
CASE GROUND
SIGNAL OUTPUT HI LO
28V DC POWER
SIZE 18 TYPE 06 CLASS 1
SIZE 20 TYPE 02 CLASS 1
SIZE 18 TYPE 02 CLASS 1
GREEN
YELLOW
BLUE
TANK UNITS SUPPLIED BY SMITHS LTD.
M9R
M10R
M6R
M5L
DA-33 B10
B121
PE(a)
3A
816
AUX OUTPUT
Y7R
Y8R
CASE GROUND
SIGNAL LO HI
TYPE 06 CLASS 2
5 VOLT LIGHTING HI LO
TYPE 02 CLASS 2
L4R
L8R
FUEL CONTENTS INDICATOR
1982
4043
1 DC POWER DISTRIBUTION (N03B)
2 SUPPLIES FOR INTEGRAL LIGHTS (N12B)
3 FUEL CONTENTS GAUGES (N07 SHT 1)
ART ID # HA00F890804AA
25-8NA5-307 SH 2
DWG ISS - 7

	IDENT	PART NUMBER	1234567 NOMENCLATURE	EFFECT FROM TO	UNITS PER ASSY
			FUEL CONTENTS GAUGES	091115 117176 178183 185189 191193 195197 199210 212212 216260 262276	
R R R R R		25-8NA5-307	WIRING DIAGRAM- (MOD 253149C) (MOD 25F505A) (PRE MOD 259258B) (PRE MOD 25F968A)		RF
	B111-DAD	483TCG11J25-3A	.CIRCUIT BREAKER-3AMP (V82647)		1
	B121-DAD	483TCG11J25-3A	.CIRCUIT BREAKER-3AMP (V82647)		1
	D-PQ	0107KPU1	.PROCESSOR- (UNIT EXCHANGE ITEM) (VK5294)		1
	DA31-P	MTC100YH2-009	.SHELL-PLUG (VK1010) (USED WITH WAFERS: TYPE A, MTC100KT2-1101 TYPE B, MTC100KT2-1102)	091115 117176 178183 185189 191193 195197 199210 212212 216254	1
	DA31-P	MTC100YH2-009	.SHELL-PLUG (VK1010) (USED WITH INSERTS: PRIMARY MTC100YC1-001 SECONDARY MTC100YC1-002)	255260 262276	1
	DA31-R	MTC100YH2-010	.SHELL-RECEPTACLE (VK1010) (USED WITH WAFERS: TYPE A, MTC100KT2-1103 TYPE B, MTC100KT2-1104)	091115 117176 178183 185189 191193 195197 199210 212212 216254	1
	DA31-R	MTC100YH2-010	.SHELL-RECEPTACLE (VK1010) (USED WITH INSERTS: PRIMARY MTC100YC1-003 SECONDARY MTC100YC1-004)	255260 262276	1
			MISSING ITEM NO. NOT APPLICABLE		

– ITEM NOT ILLUSTRATED

IDENT	PART NUMBER	1234567 NOMENCLATURE	EFFECT FROM TO	UNITS PER ASSY
DA33-P	MTC100YH2-009	.SHELL-PLUG (VK1010) (USED WITH WAFERS: TYPE A, MTC100KT2-1101 TYPE B, MTC100KT2-1102)	091115 117176 178183 185189 191193 195197 199210 212212 216254	1
DA33-P	MTC100YH2-009	.SHELL-PLUG (VK1010) (USED WITH INSERTS: PRIMARY MTC100YC1-001 SECONDARY MTC100YC1-002)	255260 262276	1
DA33-R	MTC100YH2-010	.SHELL-RECEPTACLE (VK1010) (USED WITH WAFERS: TYPE A, MTC100KT2-1103 TYPE B, MTC100KT2-1104)	091115 117176 178183 185189 191193 195197 199210 212212 216254	1
DA33-R	MTC100YH2-010	.SHELL-RECEPTACLE (VK1010) (USED WITH INSERTS: PRIMARY MTC100YC1-003 SECONDARY MTC100YC1-004)	255260 262276	1
DC	422254-8	.BUNG- (VK1793)		1
J-CC	WL1901KID1	.INDICATOR-FUEL CONTENTS (VK5294)		1
JAP2-P	BAEREF000004329	.CONNECTOR-SOCKET (6027-22-41SNCONDD (VK1793))		1
JAP2-R	BAEREF000004077	.CONNECTOR-PIN (6026-22-41PNCONDD (VK1793))		1
JAP3-P	BAEREF000004149	.CONNECTOR-SOCKET (6027-22-41SWCONDD (VK1793))		1
JAP3-R	BAEREF000004075	.CONNECTOR-PIN (6026-22-41PWCONDD (VK1793))		1
JZ-P	25-8NW7-13A	.CONNECTOR ASSY- (COMPRISING CONNECTOR: LL57L14-19P1-9551 (VK1793))		1
JZ-R	0107KLM1	.CONNECTOR- (VK5294)		1
		MISSING ITEM NO. NOT APPLICABLE		

– ITEM NOT ILLUSTRATED

IDENT	PART NUMBER	1234567 NOMENCLATURE	EFFECT FROM TO	UNITS PER ASSY
KZ-P	25-8NW7-13A	.CONNECTOR ASSY- (COMPRISING CONNECTOR: LL57L14-19P1-9551 (VK1793))		1
KZ-R	0107KLM1	.CONNECTOR- (VK5294)		1
L-CC	WL1901KID1	.INDICATOR-FUEL CONTENTS (VK5294)		1
L-WA	72444-030-0AV2	.TERMINAL BLOCK- (VK0574)		1
M-WA	72444-030-0AV2	.TERMINAL BLOCK- (VK0574)		1
Y-CC	HWBUN1736D10B	.TERMINAL BLOCK- (VK0574)		1
1-LH	0207KTU1	.CONTENTS UNIT-NO.1 (VK0802)	091115 117176 178183 185189 191193 195197 199210 212212 216260 262276	1
1-RH	0207KTU1	.CONTENTS UNIT-NO.1 (VK0802)	091115 117176 178183 185189 191193 195197 199210 212212 216260 262276	1
2-LH	0204KTU2	.CONTENTS UNIT-NO.2 (VK0802)		1
2-RH	0204KTU2	.CONTENTS UNIT-NO.2 (VK0802)		1
3-LH	0207KTU3	.CONTENTS UNIT-NO.3 (VK0802)		1
3-RH	0207KTU3	.CONTENTS UNIT-NO.3 (VK0802)		1
4-LH	0204KTU4	.CONTENTS UNIT-NO.4 (VK0802)		1
4-RH	0204KTU4	.CONTENTS UNIT-NO.4 (VK0802)		1
5-LH	0204KTU5	.CONTENTS UNIT-NO.5 (VK0802)		1
5-RH	0204KTU5	.CONTENTS UNIT-NO.5 (VK0802)		1
		MISSING ITEM NO. NOT APPLICABLE		

– ITEM NOT ILLUSTRATED

IDENT	PART NUMBER	1234567 NOMENCLATURE	EFFECT FROM TO	UNITS PER ASSY
6-LH	0204KTU6	.CONTENTS UNIT-NO.6 (VK0802)		1
6-RH	0204KTU6	.CONTENTS UNIT-NO.6 (VK0802)		1
7-LH	0204KTU7	.CONTENTS UNIT-NO.7 (VK0802)		1
7-RH	0204KTU7	.CONTENTS UNIT-NO.7 (VK0802)		1
		MISSING ITEM NO. NOT APPLICABLE		

– ITEM NOT ILLUSTRATED

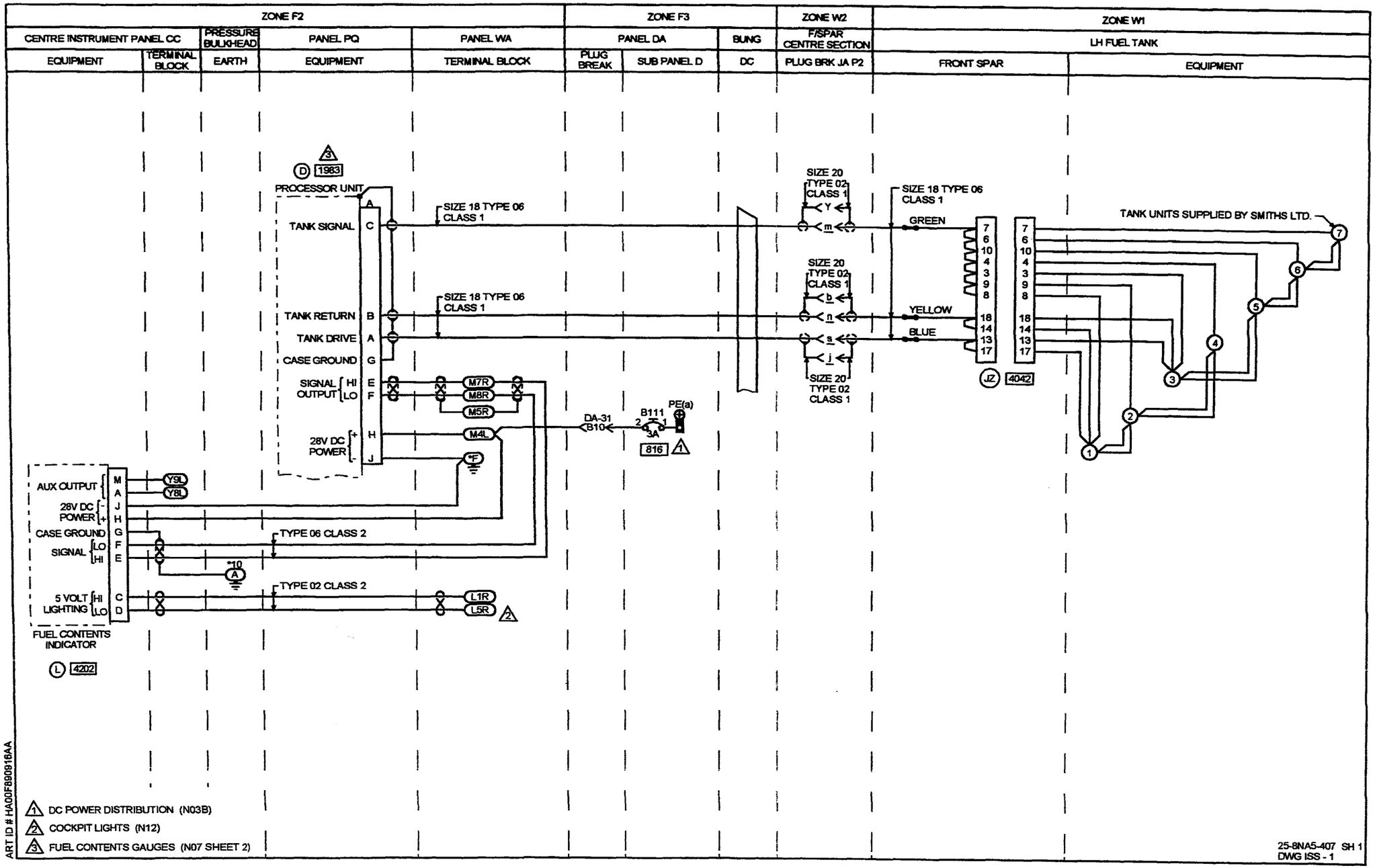
ZONE F2
ZONE F3
ZONE W2
ZONE W1
CENTRE INSTRUMENT PANEL CC
PRESSURE BULKHEAD
PANEL PQ
PANEL WA
PANEL DA
BUNG
F/SPAR CENTRE SECTION
LH FUEL TANK
EQUIPMENT
TERMINAL BLOCK
EARTH
EQUIPMENT
TERMINAL BLOCK
PLUG BREAK
SUB PANEL D
DC
PLUG BRK JA P2
FRONT SPAR
EQUIPMENT
PROCESSOR UNIT
TANK SIGNAL
TANK RETURN
TANK DRIVE
CASE GROUND
SIGNAL OUTPUT HI LO
28V DC POWER
SIZE 18 TYPE 06 CLASS 1
SIZE 20 TYPE 02 CLASS 1
GREEN
YELLOW
BLUE
TANK UNITS SUPPLIED BY SMITHS LTD.
M7R
M8R
M5R
M4L
DA-31 B10
B111
PE(a)
816
AUX OUTPUT
CASE GROUND
SIGNAL LO HI
TYPE 06 CLASS 2
5 VOLT LIGHTING HI LO
TYPE 02 CLASS 2
L1R
L5R
FUEL CONTENTS INDICATOR
4042
4202
1 DC POWER DISTRIBUTION (N03B)
2 COCKPIT LIGHTS (N12)
3 FUEL CONTENTS GAUGES (N07 SHEET 2)
ART ID # HA00F890916AA
25-8NA5-407 SH 1
DWG ISS - 1

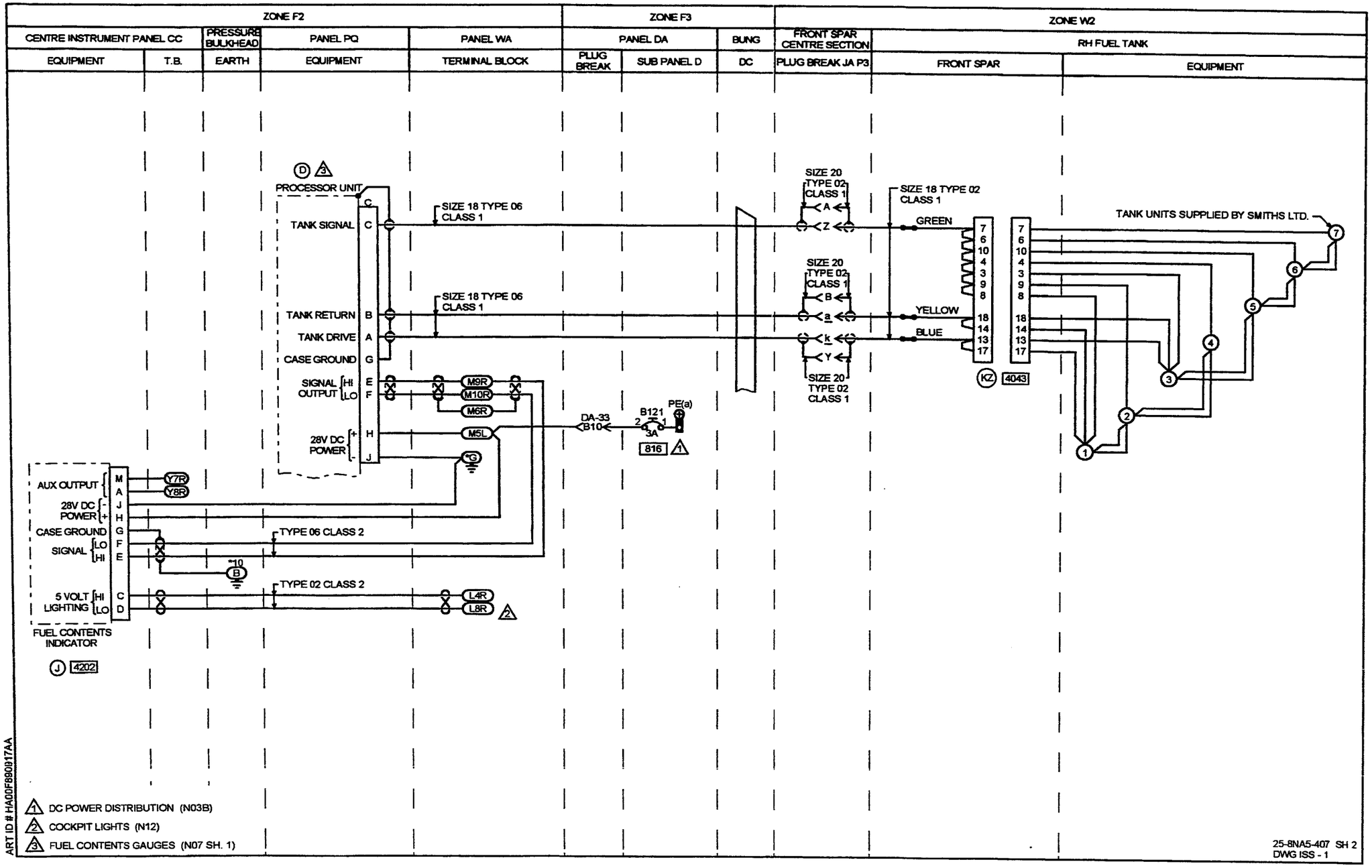
ZONE F2
ZONE F3
ZONE W2
CENTRE INSTRUMENT PANEL CC
PRESSURE BULKHEAD
PANEL PQ
PANEL WA
PANEL DA
BUNG
FRONT SPAR CENTRE SECTION
RH FUEL TANK
EQUIPMENT
T.B.
EARTH
EQUIPMENT
TERMINAL BLOCK
PLUG BREAK
SUB PANEL D
DC
PLUG BREAK JA P3
FRONT SPAR
EQUIPMENT
PROCESSOR UNIT
TANK SIGNAL
TANK RETURN
TANK DRIVE
CASE GROUND
SIGNAL OUTPUT
28V DC POWER
SIZE 18 TYPE 06 CLASS 1
SIZE 20 TYPE 02 CLASS 1
SIZE 18 TYPE 02 CLASS 1
GREEN
YELLOW
BLUE
TANK UNITS SUPPLIED BY SMITHS LTD.
M9R
M10R
M6R
M5L
DA-33 B10
B121
PE(a)
816
AUX OUTPUT
Y7R
Y8R
TYPE 06 CLASS 2
TYPE 02 CLASS 2
5 VOLT LIGHTING
L4R
L8R
FUEL CONTENTS INDICATOR
4202
4043
DC POWER DISTRIBUTION (N03B)
COCKPIT LIGHTS (N12)
FUEL CONTENTS GAUGES (N07 SH. 1)
ART ID # HA00F890917AA
25-8NA5-407 SH 2
DWG ISS - 1

IDENT	PART NUMBER	1234567 NOMENCLATURE	EFFECT FROM TO	UNITS PER ASSY
		FUEL CONTENTS GAUGES	116116 177177 184184 190190 194194 198198 211211 214215 261261	
	25-8NA5-407	WIRING DIAGRAM- (MODIFIED BY SB31-60-9258B) (MOD 259258B)		RF
B111-DAD	483TCG11J25-3A	.CIRCUIT BREAKER-3AMP (V82647)		1
B121-DAD	483TCG11J25-3A	.CIRCUIT BREAKER-3AMP (V82647)		1
D-PQ	0107KPU1	.PROCESSOR- (UNIT EXCHANGE ITEM) (VK5294)		1
DA31-P	MTC100YH2-009	.SHELL-PLUG (VK1010) (USED WITH WAFERS: TYPE A, MTC100KT2-1101 TYPE B, MTC100KT2-1102)	116116 177177 184184 190190 194194 198198 211211 214215	1
DA31-P	MTC100YH2-009	.SHELL-PLUG (VK1010) (USED WITH INSERTS: PRIMARY MTC100YC1-001 SECONDARY MTC100YC1-002)	261261	1
DA31-R	MTC100YH2-010	.SHELL-RECEPTACLE (VK1010) (USED WITH WAFERS: TYPE A, MTC100KT2-1103 TYPE B, MTC100KT2-1104)	116116 177177 184184 190190 194194 198198 211211 214215	1
DA31-R	MTC100YH2-010	.SHELL-RECEPTACLE (VK1010) (USED WITH INSERTS: PRIMARY MTC100YC1-003 SECONDARY MTC100YC1-004)	261261	1
		MISSING ITEM NO. NOT APPLICABLE		

– ITEM NOT ILLUSTRATED

IDENT	PART NUMBER	1234567 NOMENCLATURE	EFFECT FROM TO	UNITS PER ASSY
DA33-P	MTC100YH2-009	.SHELL-PLUG (VK1010) (USED WITH WAFERS: TYPE A, MTC100KT2-1101 TYPE B, MTC100KT2-1102)	116116 177177 184184 190190 194194 198198 211211 214215	1
DA33-P	MTC100YH2-009	.SHELL-PLUG (VK1010) (USED WITH INSERTS: PRIMARY MTC100YC1-001 SECONDARY MTC100YC1-002)	261261	1
DA33-R	MTC100YH2-010	.SHELL-RECEPTACLE (VK1010) (USED WITH WAFERS: TYPE A, MTC100KT2-1103 TYPE B, MTC100KT2-1104)	116116 177177 184184 190190 194194 198198 211211 214215	1
DA33-R	MTC100YH2-010	.SHELL-RECEPTACLE (VK1010) (USED WITH INSERTS: PRIMARY MTC100YC1-003 SECONDARY MTC100YC1-004)	261261	1
DC	422254-8	.BUNG- (VK1793)		1
J-CC	WL1903KID01	.INDICATOR-FUEL CONTENTS (VK5294) (POST SB31-60)		1
JAP2-P	BAEREF000004329	.CONNECTOR-SOCKET (6027-22-41SNCONDD (VK1793))		1
JAP2-R	BAEREF000004077	.CONNECTOR-PIN (6026-22-41PNCONDD (VK1793))		1
JAP3-P	BAEREF000004149	.CONNECTOR-SOCKET (6027-22-41SWCONDD (VK1793))		1
JAP3-R	BAEREF000004075	.CONNECTOR-PIN (6026-22-41PWCONDD (VK1793))		1
JZ-P	25-8NW7-13A	.CONNECTOR ASSY- (COMPRISING CONNECTOR: LL57L14-19P1-9551 (VK1793))		1
JZ-R	0107KLM1	.CONNECTOR- (VK5294)		1

MISSING ITEM NO. NOT APPLICABLE

- ITEM NOT ILLUSTRATED

IDENT	PART NUMBER	1234567 NOMENCLATURE	EFFECT FROM TO	UNITS PER ASSY
KZ-P	25-8NW7-13A	.CONNECTOR ASSY- (COMPRISING CONNECTOR: LL57L14-19P1-9551 (VK1793))		1
KZ-R	0107KLM1	.CONNECTOR- (VK5294)		1
L-CC	WL1903KID01	.INDICATOR-FUEL CONTENTS (VK5294) (POST SB31-60)		1
L-WA	72444-030-0AV2	.TERMINAL BLOCK- (VK0574)		1
M-WA	72444-030-0AV2	.TERMINAL BLOCK- (VK0574)		1
Y-CC	HWBUN1736D10B	.TERMINAL BLOCK- (VK0574)		1
1-LH	0207KTU1	.CONTENTS UNIT-NO.1 (VK0802)		1
1-RH	0207KTU1	.CONTENTS UNIT-NO.1 (VK0802)		1
2-LH	0204KTU2	.CONTENTS UNIT-NO.2 (VK0802)		1
2-RH	0204KTU2	.CONTENTS UNIT-NO.2 (VK0802)		1
3-LH	0207KTU3	.CONTENTS UNIT-NO.3 (VK0802)		1
3-RH	0207KTU3	.CONTENTS UNIT-NO.3 (VK0802)		1
4-LH	0204KTU4	.CONTENTS UNIT-NO.4 (VK0802)		1
4-RH	0204KTU4	.CONTENTS UNIT-NO.4 (VK0802)		1
5-LH	0204KTU5	.CONTENTS UNIT-NO.5 (VK0802)		1
5-RH	0204KTU5	.CONTENTS UNIT-NO.5 (VK0802)		1
6-LH	0204KTU6	.CONTENTS UNIT-NO.6 (VK0802)		1
6-RH	0204KTU6	.CONTENTS UNIT-NO.6 (VK0802)		1
7-LH	0204KTU7	.CONTENTS UNIT-NO.7 (VK0802)		1
7-RH	0204KTU7	.CONTENTS UNIT-NO.7 (VK0802)		1
		MISSING ITEM NO. NOT APPLICABLE		

- ITEM NOT ILLUSTRATED

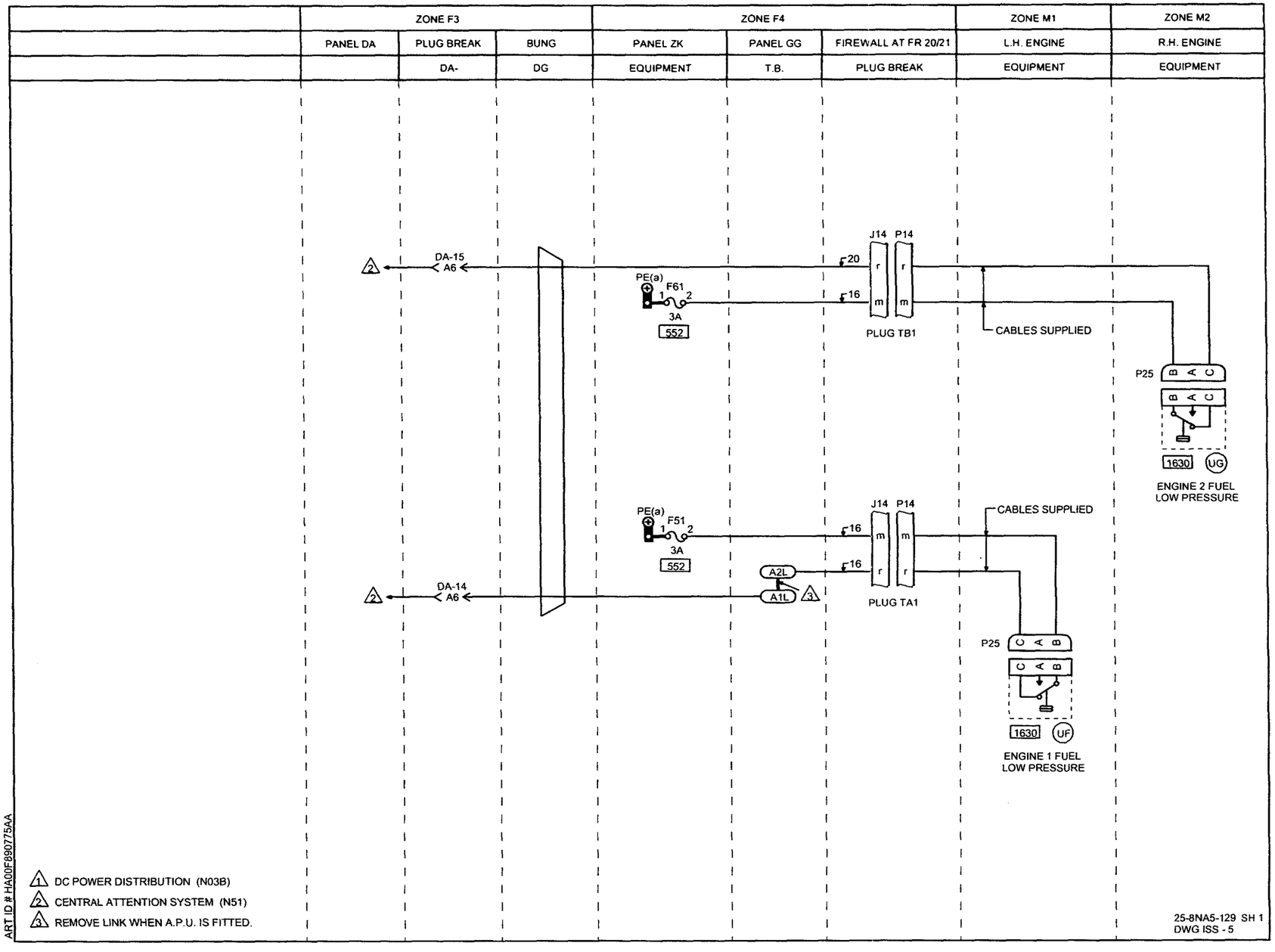
ZONE F3
ZONE F4
ZONE M1
ZONE M2
PANEL DA
PLUG BREAK
BUNG
PANEL ZK
PANEL GG
FIREWALL AT FR 20/21
L.H. ENGINE
R.H. ENGINE
DA-
DG
EQUIPMENT
T.B.
PLUG BREAK
EQUIPMENT
EQUIPMENT
DA-15
A6
DA-14
A6
PE(a)
F61
F51
3A
552
J14
P14
PLUG TB1
PLUG TA1
CABLES SUPPLIED
P25
1630
UG
UF
ENGINE 2 FUEL
LOW PRESSURE
ENGINE 1 FUEL
LOW PRESSURE
A2L
A1L
1 DC POWER DISTRIBUTION (N03B)
2 CENTRAL ATTENTION SYSTEM (N51)
3 REMOVE LINK WHEN A.P.U. IS FITTED.
25-8NA5-129 SH 1
DWG ISS - 5
ART ID # HA00F890775AA

IDENT	PART NUMBER	1234567 NOMENCLATURE	EFFECT FROM TO	UNITS PER ASSY
		FUEL PRESSURE	091276	
	25-8NA5-129	WIRING DIAGRAM-		RF
		(MOD 253149C)		
		(MOD 25F505A)		
A-GG	HWBUN1146D10B	.TERMINAL BLOCK-		1
		(VK0574)		
DA14-P	MTC100YH1-003	.SHELL-PLUG	091254	1
		(VK1010)		
		(USED WITH WAFERS:		
		TYPE A, MTC100KT1-1101		
		TYPE B, MTC100KT1-1102)		
DA14-P	MTC100YH1-003	.SHELL-PLUG	255276	1
		(VK1010)		
		(USED WITH INSERT:		
		MTC100YC1-005)		
DA14-R	MTC100YH1-004	.SHELL-RECEPTACLE	091254	1
		(VK1010)		
		(USED WITH WAFERS:		
		TYPE A, MTC100KT1-1103		
		TYPE B, MTC100KT1-1104)		
DA14-R	MTC100YH1-004	.SHELL-RECEPTACLE	255276	1
		(VK1010)		
		(USED WITH INSERT:		
		MTC100YC1-006)		
DA15-P	MTC100YH1-003	.SHELL-PLUG	091254	1
		(VK1010)		
		(USED WITH WAFERS:		
		TYPE A, MTC100KT1-1101		
		TYPE B, MTC100KT1-1102)		
DA15-P	MTC100YH1-003	.SHELL-PLUG	255276	1
		(VK1010)		
		(USED WITH INSERT:		
		MTC100YC1-005)		
DA15-R	MTC100YH1-004	.SHELL-RECEPTACLE	091254	1
		(VK1010)		
		(USED WITH WAFERS:		
		TYPE A, MTC100KT1-1103		
		TYPE B, MTC100KT1-1104)		
DA15-R	MTC100YH1-004	.SHELL-RECEPTACLE	255276	1
		(VK1010)		
		(USED WITH INSERT:		
		MTC100YC1-006)		
DG	422255-8	.BUNG-		1
		(VK1793)		
F51-ZK	5920-99-0120075	.FUSE-3AMP		1
		(VK0657)		
F61-ZK	5920-99-0120075	.FUSE-3AMP		1
		(VK0657)		
		MISSING ITEM NO. NOT APPLICABLE		

– ITEM NOT ILLUSTRATED

IDENT	PART NUMBER	1234567 NOMENCLATURE	EFFECT FROM TO	UNITS PER ASSY
J14-TA1	D38999-20KG39SN	.CONNECTOR- (V77820) (USED WITH CLAMP: G8801S21 (VU0419))		1
J14-TB1	D38999-20KG39SN	.CONNECTOR- (V77820) (USED WITH CLAMP: G8801S21 (VU0419))		1
UF	HTE690014-1	.PRESSURE SWITCH- (VK2617)		1
UG	HTE690014-1	.PRESSURE SWITCH- (VK2617)		1
		MISSING ITEM NO. NOT APPLICABLE		

- ITEM NOT ILLUSTRATED

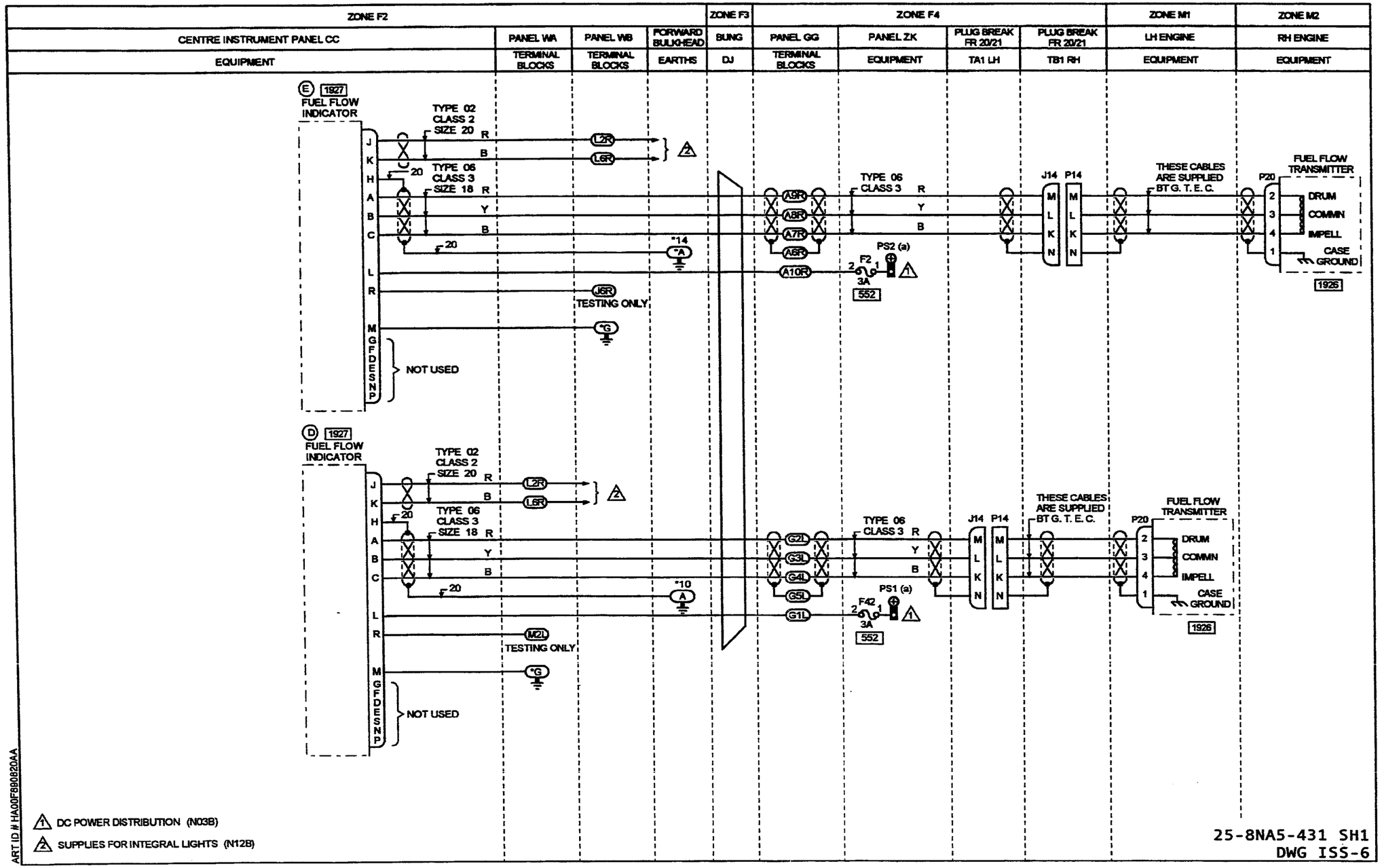
ZONE F2
ZONE F3
ZONE F4
ZONE M1
ZONE M2
CENTRE INSTRUMENT PANEL CC
PANEL WA
PANEL WB
FORWARD BULKHEAD
BUNG
PANEL GG
PANEL ZK
PLUG BREAK FR 20/21
PLUG BREAK FR 20/21
LH ENGINE
RH ENGINE
EQUIPMENT
TERMINAL BLOCKS
TERMINAL BLOCKS
EARTHS
DJ
TERMINAL BLOCKS
EQUIPMENT
TA1 LH
TB1 RH
EQUIPMENT
EQUIPMENT
E 1927
FUEL FLOW INDICATOR
TYPE 02 CLASS 2 SIZE 20
TYPE 06 CLASS 3 SIZE 18
L2R
L6R
A9R
A8R
A7R
A6R
A10R
J6R
TESTING ONLY
*14
*A
*G
NOT USED
TYPE 06 CLASS 3
PS2 (a)
F2
3A
552
J14
P14
THESE CABLES ARE SUPPLIED BT G. T. E. C.
P20
FUEL FLOW TRANSMITTER
DRUM
COMMN
IMPELL
CASE GROUND
1926
D 1927
FUEL FLOW INDICATOR
G2L
G3L
G4L
G5L
G1L
M2L
TESTING ONLY
*10
A
PS1 (a)
F42
3A
552
DC POWER DISTRIBUTION (N03B)
SUPPLIES FOR INTEGRAL LIGHTS (N12B)
ART ID # HA00F980820AA
25-8NA5-431 SH1
DWG ISS-6

	IDENT	PART NUMBER	1234567 NOMENCLATURE	EFFECT FROM TO	UNITS PER ASSY
			FUEL FLOWMETERS	091093 095105 107108 111111 113114 117117 119119 121129 132132 135142 144145 147147 150163 166166 168176 178181 183183 185185 187189 191191 193193 195196 199207 209210 212212 216260 262276	
R R R R R R		25-8NA5-431	WIRING DIAGRAM- (MOD 253149C) (MOD 25F505A) (PRE MOD 259258B) (PRE MOD 259452A) (PRE MOD 25F968A)		RF
	A-GG	HWBUN1146D10B	.TERMINAL BLOCK- (VK0574)		1
	D-CC	9-328-26-002	.INDICATOR-FUEL FLOW (V08748)		1
	DJ	422255-7	.BUNG- (VK1793)		1
	E-CC	9-328-26-002	.INDICATOR-FUEL FLOW (V08748)		1
	F2-ZK	5920-99-0120075	.FUSE-3AMP (VK0657)		1
	F42-ZK	5920-99-0120075	.FUSE-3AMP (VK0657)		1
	G-GG	HWBUN1146D10B	.TERMINAL BLOCK- (VK0574)		1
	J-WB	72444-030-0AV2	.TERMINAL BLOCK- (VK0574)		1
			MISSING ITEM NO. NOT APPLICABLE		

– ITEM NOT ILLUSTRATED

IDENT	PART NUMBER	1234567 NOMENCLATURE	EFFECT FROM TO	UNITS PER ASSY
J14-TA1	D38999-20KG39SN	.CONNECTOR-SOCKET (VK0690) (USED WITH OUTLET: G8801S21 (VU0419))		1
J14-TB1	D38999-20KG39SN	.CONNECTOR-SOCKET (VK0690) (USED WITH OUTLET: G8801S21 (VU0419))		1
L-WA	72444-030-0AV2	.TERMINAL BLOCK- (VK0574)		1
L-WB	72444-030-0AV2	.TERMINAL BLOCK- (VK0574)		1
M-WA	72444-030-0AV2	.TERMINAL BLOCK- (VK0574)		1
1926-M1	19-127-55	.TRANSMITTER-FUEL FLOW (V08748)		1
1926-M2	19-127-55	.TRANSMITTER-FUEL FLOW (V08748)		1
		MISSING ITEM NO. NOT APPLICABLE		

– ITEM NOT ILLUSTRATED

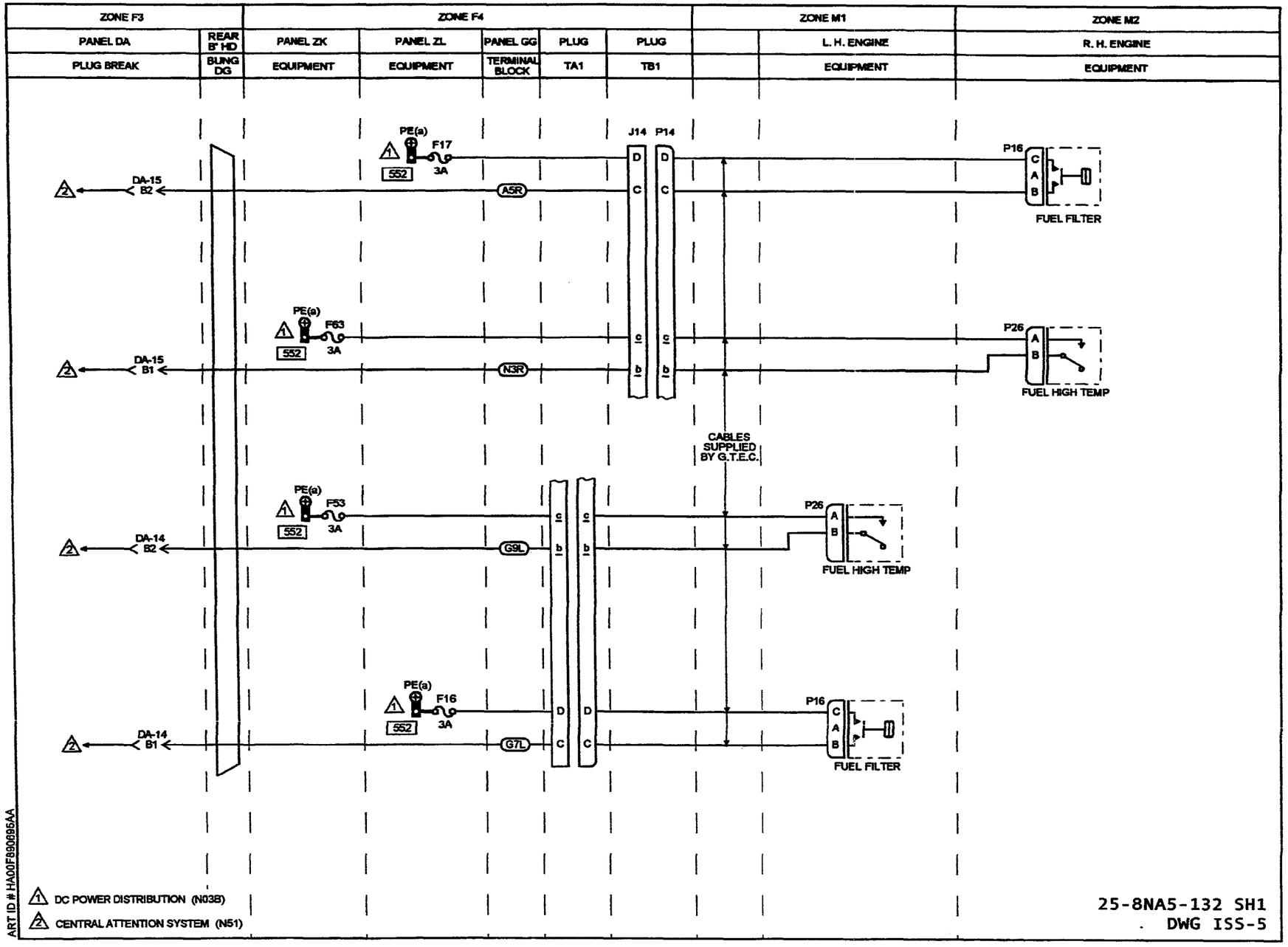
ZONE F3
ZONE F4
ZONE M1
ZONE M2
PANEL DA
REAR 8" HD
PANEL ZK
PANEL ZL
PANEL GG
PLUG
PLUG
L. H. ENGINE
R. H. ENGINE
PLUG BREAK
BUNG DG
EQUIPMENT
EQUIPMENT
TERMINAL BLOCK
TA1
TB1
EQUIPMENT
EQUIPMENT
J14
P14
PE(a)
F17
3A
552
DA-15 B2
A5R
P16
FUEL FILTER
PE(a)
F63
3A
552
DA-15 B1
N3R
P26
FUEL HIGH TEMP
CABLES SUPPLIED BY G.T.E.C.
PE(a)
F53
3A
552
DA-14 B2
G9L
P26
FUEL HIGH TEMP
PE(a)
F16
3A
552
DA-14 B1
G7L
P16
FUEL FILTER
DC POWER DISTRIBUTION (N03B)
CENTRAL ATTENTION SYSTEM (N51)
ART ID # HA00F890895AA
25-8NA5-132 SH1
DWG ISS-5

IDENT	PART NUMBER	1234567 NOMENCLATURE	EFFECT FROM TO	UNITS PER ASSY
		FUEL FILTER BLOCKED AND OVERHEAT	091276	
	25-8NA5-132	WIRING DIAGRAM- (MOD 253149C) (MOD 25F505A)		RF
A-GG	HWBUN1146D10B	.TERMINAL BLOCK- (VK0574)		1
DA14-P	MTC100YH1-003	.SHELL-PLUG (VK1010) (USED WITH WAFERS: TYPE A, MTC100KT1-1101 TYPE B, MTC100KT1-1102)	091254	1
DA14-P	MTC100YH1-003	.SHELL-PLUG (VK1010) (USED WITH INSERT: MTC100YC1-005)	255276	1
DA14-R	MTC100YH1-004	.SHELL-RECEPTACLE (VK1010) (USED WITH WAFERS: TYPE A, MTC100KT1-1103 TYPE B, MTC100KT1-1104)	091254	1
DA14-R	MTC100YH1-004	.SHELL-RECEPTACLE (VK1010) (USED WITH INSERT: MTC100YC1-006)	255276	1
DA15-P	MTC100YH1-003	.SHELL-PLUG (VK1010) (USED WITH WAFERS: TYPE A, MTC100KT1-1101 TYPE B, MTC100KT1-1102)	091254	1
DA15-P	MTC100YH1-003	.SHELL-PLUG (VK1010) (USED WITH INSERT: MTC100YC1-005)	255276	1
DA15-R	MTC100YH1-004	.SHELL-RECEPTACLE (VK1010) (USED WITH WAFERS: TYPE A, MTC100KT1-1103 TYPE B, MTC100KT1-1104)	091254	1
DA15-R	MTC100YH1-004	.SHELL-RECEPTACLE (VK1010) (USED WITH INSERT: MTC100YC1-006)	255276	1
DG	422255-8	.BUNG- (VK1793)		1
F16-ZL	5920-99-0120075	.FUSE-3AMP (VK0657)		1
F17-ZL	5920-99-0120075	.FUSE-3AMP (VK0657)		1
		MISSING ITEM NO. NOT APPLICABLE		

— ITEM NOT ILLUSTRATED

IDENT	PART NUMBER	1234567 NOMENCLATURE	EFFECT FROM TO	UNITS PER ASSY
F53-ZK	5920-99-0120075	.FUSE-3AMP (VK0657)		1
F63-ZK	5920-99-0120075	.FUSE-3AMP (VK0657)		1
G-GG	HWBUN1146D10B	.TERMINAL BLOCK- (VK0574)		1
J14-TA1	D38999-20KG39SN	.CONNECTOR- (V77820) (USED WITH STRAIN CLAMP: G8801S21)		1
J14-TB1	D38999-20KG39SN	.CONNECTOR- (V77820) (USED WITH STRAIN CLAMP: G8801S21)		1
N-GG	HWBUN1146D10B	.TERMINAL BLOCK- (VK0574)		1
P16-M1	569206	.SWITCH-DIFFERENTIAL PRESSURE (V62983)		1
P16-M1	623179	.SWITCH-DIFFERENTIAL PRESSURE (V62983)		1
P16-M2	569206	.SWITCH-DIFFERENTIAL PRESSURE (V62983)		1
P16-M2	623179	.SWITCH-DIFFERENTIAL PRESSURE (V62983)		1
P26-M1	HTE60010	.SWITCH-FUEL HIGH TEMPERATURE (VK2617)		1
P26-M2	HTE60010	.SWITCH-FUEL HIGH TEMPERATURE (VK2617)		1
		MISSING ITEM NO. NOT APPLICABLE		

– ITEM NOT ILLUSTRATED

PRESSURE REFUELING

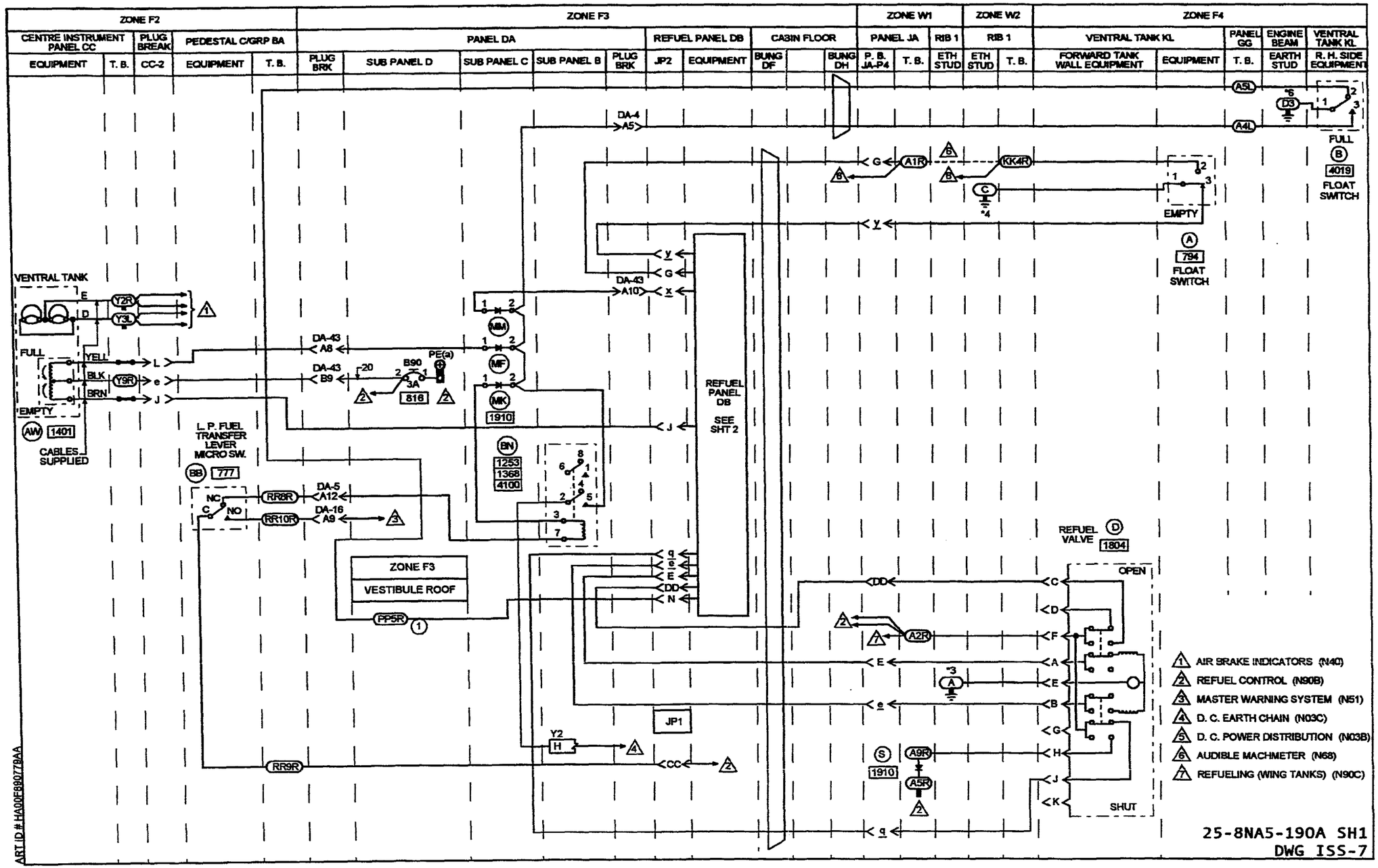
ZONE F2
ZONE F3
ZONE W1
ZONE W2
ZONE F4
CENTRE INSTRUMENT PANEL CC
PLUG BREAK
PEDESTAL C/GRP BA
PANEL DA
REFUEL PANEL DB
CABIN FLOOR
PANEL JA
RIB 1
RIB 1
VENTRAL TANK KL
PANEL GG
ENGINE BEAM
VENTRAL TANK KL
EQUIPMENT
T. B.
CC-2
EQUIPMENT
T. B.
PLUG BRK
SUB PANEL D
SUB PANEL C
SUB PANEL B
PLUG BRK
JP2
EQUIPMENT
BUNG DF
BUNG DH
P. B. JA-P4
T. B.
ETH STUD
ETH STUD
T. B.
FORWARD TANK WALL EQUIPMENT
EQUIPMENT
T. B.
EARTH STUD
R. H. SIDE EQUIPMENT
FULL
4019
FLOAT SWITCH
EMPTY
794
FLOAT SWITCH
VENTRAL TANK
FULL
EMPTY
1401
CABLES SUPPLIED
L. P. FUEL TRANSFER LEVER MICRO SW.
777
816
1910
1253
1368
4100
REFUEL PANEL DB
SEE SHT 2
ZONE F3
VESTIBULE ROOF
JP1
REFUEL VALVE
1804
OPEN
SHUT
1910
1. AIR BRAKE INDICATORS (N40)
2. REFUEL CONTROL (N90B)
3. MASTER WARNING SYSTEM (N51)
4. D. C. EARTH CHAIN (N03C)
5. D. C. POWER DISTRIBUTION (N03B)
6. AUDIBLE MACHMETER (N68)
7. REFUELING (WING TANKS) (N90C)
25-8NA5-190A SH1
DWG ISS-7
ART ID # HA00E890778AA

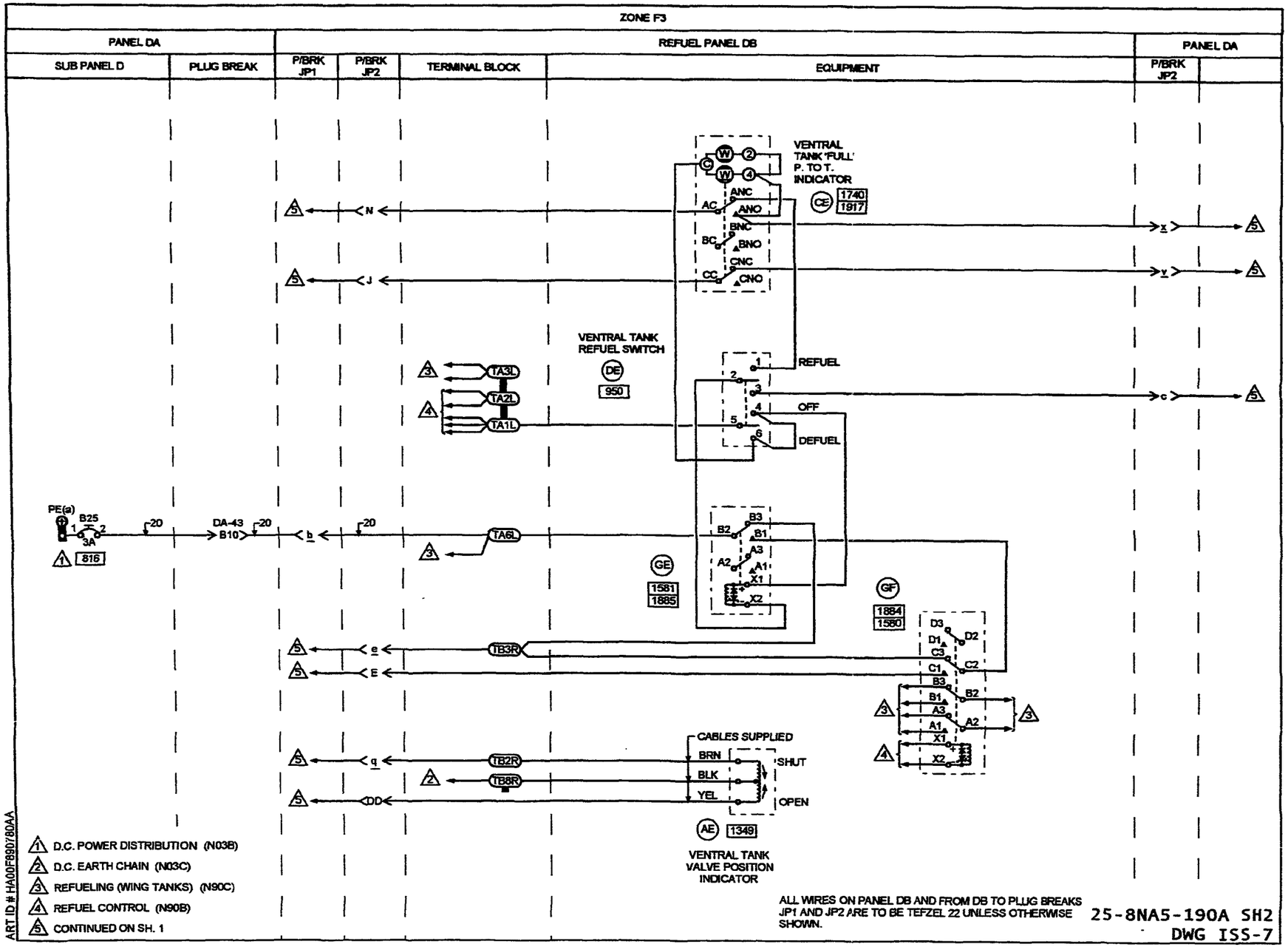
ZONE F3
PANEL DA
REFUEL PANEL DB
PANEL DA
SUB PANEL D
PLUG BREAK
P/BRK JP1
P/BRK JP2
TERMINAL BLOCK
EQUIPMENT
P/BRK JP2
VENTRAL TANK 'FULL' P. TO T. INDICATOR
CE
1740
1917
ANC
ANO
BNC
BNO
CNC
CNO
VENTRAL TANK REFUEL SWITCH
DE
950
REFUEL
OFF
DEFUEL
TA3L
TA2L
TA1L
PE(a)
B25
3A
816
DA-43
B10
TA6L
GE
1581
1885
GF
1884
1560
TB3R
TB2R
TB8R
CABLES SUPPLIED
BRN
BLK
YEL
SHUT
OPEN
AE
1349
VENTRAL TANK VALVE POSITION INDICATOR
1 D.C. POWER DISTRIBUTION (N03B)
2 D.C. EARTH CHAIN (N03C)
3 REFUELING (WING TANKS) (N90C)
4 REFUEL CONTROL (N90B)
5 CONTINUED ON SH. 1
ALL WIRES ON PANEL DB AND FROM DB TO PLUG BREAKS JP1 AND JP2 ARE TO BE TEFZEL 22 UNLESS OTHERWISE SHOWN.
25-8NA5-190A SH2
DWG ISS-7
ART ID # HA00F89007 80AA

	IDENT	PART NUMBER	1234567 NOMENCLATURE	EFFECT FROM TO	UNITS PER ASSY
			PRESSURE REFUELLING, VENTRAL TANK	091112 114123 125143 145179 181232 234234 236236 238276	
R		25-8NA5-190A	WIRING DIAGRAM-		RF
R			(MOD 253149C)		
R			(MOD 25F505A)		
R			(PRE MOD 259499A)		
R			(PRE MOD 259855A)		
R			(PRE MOD 25A581F)		
R			(PRE MOD 25F737C)		
R			(PRE MOD 25F968A)		
	A-GG	HWBUN1146D10B	.TERMINAL BLOCK- (VK0574)		1
	A-JA	HWBUN1146D10B	.TERMINAL BLOCK- (VK0574)		1
	A-KL	3515000-149	.FLOAT SWITCH-LOW LEVEL (UNIT EXCHANGE ITEM) (VU1918)		1
	AE-DB	6333-014-01A4	.MAGNETIC INDICATOR-SHUT (VK0653)		1
	AW-CC	6333-019-01A	.MAGNETIC INDICATOR- (VK0653)		1
	B-KL	3515000-105	.FLOAT SWITCH-HIGH LEVEL (VU1918)		1
	BB-BA	1HSN64	.MICROSWITCH- (V91929) (OPT (VK6596))		1
	BN-DAB	HDS8SF3J03	.RELAY- (VK1793) (USED WITH SOCKET: RSE120074 (V58982))		1
	B25-DAD	483TCG11J25-3A	.CIRCUIT BREAKER-3AMP (VU0091)		1
	B90-DAD	483TCG11J25-3A	.CIRCUIT BREAKER-3AMP (VU0091)		1
	CC2-P	BAEREF000003522	.CONNECTOR-PIN (6026-20-41PWCONDD (VK1793))		1
	CC2-R	BAEREF000004392	.CONNECTOR-SOCKET (6027-20-41SWCONDA (VK1793)) (PRE MOD 253252A)		1
			MISSING ITEM NO. NOT APPLICABLE		

– ITEM NOT ILLUSTRATED

IDENT	PART NUMBER	1234567 NOMENCLATURE	EFFECT FROM TO	UNITS PER ASSY
CC2-R	BAEREF000003124	.CONNECTOR-SOCKET (6027-20-41SWCONDB (VK1793)) (MOD 253252A)		1
CE-DB	99-212	.INDICATOR-FULL (V32245)		1
D-KL	HTE9044-001	.ACTUATOR- (VU1918) (USED WITH CONNECTOR: PVW612-10SNS03 (V71468))		1
DA16-P	MTC100YH1-003	.SHELL-PLUG (VK1010) (USED WITH WAFERS: TYPE A, MTC100KT1-1101 TYPE B, MTC100KT1-1102)	091112 114123 125143 145179 181232 234234 236236 238254	1
DA16-P	MTC100YH1-003	.SHELL-PLUG (VK1010) (USED WITH INSERT: MTC100YC1-005)	255276	1
DA16-R	MTC100YH1-004	.SHELL-RECEPTACLE (VK1010) (USED WITH WAFERS: TYPE A, MTC100KT1-1103 TYPE B, MTC100KT1-1104)	091112 114123 125143 145179 181232 234234 236236 238254	1
DA16-R	MTC100YH1-004	.SHELL-RECEPTACLE (VK1010) (USED WITH INSERT: MTC100YC1-006)	255276	1
DA4-P	MTC100YH2-009	.SHELL-PLUG (VK1010) (USED WITH WAFERS: TYPE A, MTC100KT2-1101 TYPE B, MTC100KT2-1102)	091112 114123 125143 145179 181232 234234 236236 238254	1
DA4-P	MTC100YH2-009	.SHELL-PLUG (VK1010) (USED WITH INSERTS: PRIMARY MTC100YC1-001 SECONDARY MTC100YC1-002)	255276	1
		MISSING ITEM NO. NOT APPLICABLE		

– ITEM NOT ILLUSTRATED

IDENT	PART NUMBER	1234567 NOMENCLATURE	EFFECT FROM TO	UNITS PER ASSY
DA4-R	MTC100YH2-010	.SHELL-RECEPTACLE (VK1010) (USED WITH WAFERS: TYPE A, MTC100KT2-1103 TYPE B, MTC100KT2-1104)	091112 114123 125143 145179 181232 234234 236236 238254	1
DA4-R	MTC100YH2-010	.SHELL-RECEPTACLE (VK1010) (USED WITH INSERTS: PRIMARY MTC100YC1-003 SECONDARY MTC100YC1-004)	255276	1
DA43-P	MTC100YH1-003	.SHELL-PLUG (VK1010) (USED WITH WAFERS: TYPE A, MTC100KT1-1101 TYPE B, MTC100KT1-1102)	091112 114123 125143 145179 181232 234234 236236 238254	1
DA43-P	MTC100YH1-003	.SHELL-PLUG (VK1010) (USED WITH INSERT: MTC100YC1-005)	255276	1
DA43-R	MTC100YH1-004	.SHELL-RECEPTACLE (VK1010) (USED WITH WAFERS: TYPE A, MTC100KT1-1103 TYPE B, MTC100KT1-1104)	091112 114123 125143 145179 181232 234234 236236 238254	1
DA43-R	MTC100YH1-004	.SHELL-RECEPTACLE (VK1010) (USED WITH INSERT: MTC100YC1-006)	255276	1
DA5-P	MTC100YH2-009	.SHELL-PLUG (VK1010) (USED WITH WAFERS: TYPE A, MTC100KT2-1101 TYPE B, MTC100KT2-1102)	091112 114123 125143 145179 181232 234234 236236 238254	1
DA5-P	MTC100YH2-009	.SHELL-PLUG (VK1010) (USED WITH INSERTS: PRIMARY MTC100YC1-001 SECONDARY MTC100YC1-002)	255276	1
		MISSING ITEM NO. NOT APPLICABLE		

– ITEM NOT ILLUSTRATED

IDENT	PART NUMBER	1234567 NOMENCLATURE	EFFECT FROM TO	UNITS PER ASSY
DA5-R	MTC100YH2-010	.SHELL-RECEPTACLE (VK1010) (USED WITH WAFERS: TYPE A, MTC100KT2-1103 TYPE B, MTC100KT2-1104)	091112 114123 125143 145179 181232 234234 236236 238254	1
DA5-R	MTC100YH2-010	.SHELL-RECEPTACLE (VK1010) (USED WITH INSERTS: PRIMARY MTC100YC1-003 SECONDARY MTC100YC1-004)	255276	1
DE-DB	2TP1-1	.SWITCH- (V91929) (OPT (VK6596))	091112 114116	1
DE-DB	2TP1-1M	.SWITCH- (V91929) (OPT (VK6596))	117123 125143 145179 181232 234234 236236 238276	1
DF	422250-17	.BUNG- (VK1793)		1
DH	422254-9	.BUNG- (VK1793)		1
GE-DB	M300-1264	.RELAY- (VK6265) (USED WITH BASE: SO-1049-8309)		1
GF-DB	M400-1265	.RELAY- (VK6265) (USED WITH BASE: SO-1048-8308)		1
JP1-DB-P	RR06E22-55PN059	.CONNECTOR-PIN (VK1793)		1
JP1-DB-R	BAEREF000004012	.CONNECTOR-SOCKET (6027-22-55SNCONDD (VK1793))		1
JP2-DB-P	RR06E22-55PW059	.CONNECTOR-PIN (VK1793)		1
JP2-DB-R	BAEREF000004362	.CONNECTOR-SOCKET (6027-22-55SWCONDD (VK1793))		1
KK	72544-030-0AV2	.TERMINAL BLOCK- (VK0574)		1
MF-DAC	BYW54	.DIODE- (VK0004)		1
		MISSING ITEM NO. NOT APPLICABLE		

– ITEM NOT ILLUSTRATED

IDENT	PART NUMBER	1234567 NOMENCLATURE	EFFECT FROM TO	UNITS PER ASSY
MK-DAC	BYW54	.DIODE- (VK0004)		1
MM-DAC	BYW54	.DIODE- (VK0004)		1
PP	HWBUN1146D10B	.TERMINAL BLOCK- (VK0574)		1
P4-JA-P	BAEREF000004011	.CONNECTOR-PIN (6026-22-55PNCONDD (VK1793))		1
P4-JA-R	BAEREF000004012	.CONNECTOR-SOCKET (6027-22-55SNCONDD (VK1793))		1
RR-BA	HWBUN1146D5B	.TERMINAL BLOCK- (VK0574)		1
S-JA	1N4005	.DIODE- (VK5519) (OPT BYW54 (VK0004))		1
TA-DB	HWBUN1736D10B	.TERMINAL BLOCK- (VK0574)		1
TB-DB	HWBUN1736D10B	.TERMINAL BLOCK- (VK0574)		1
Y-CC	HWBUN1736D10B	.TERMINAL BLOCK- (VK0574)		1
		MISSING ITEM NO. NOT APPLICABLE		

– ITEM NOT ILLUSTRATED

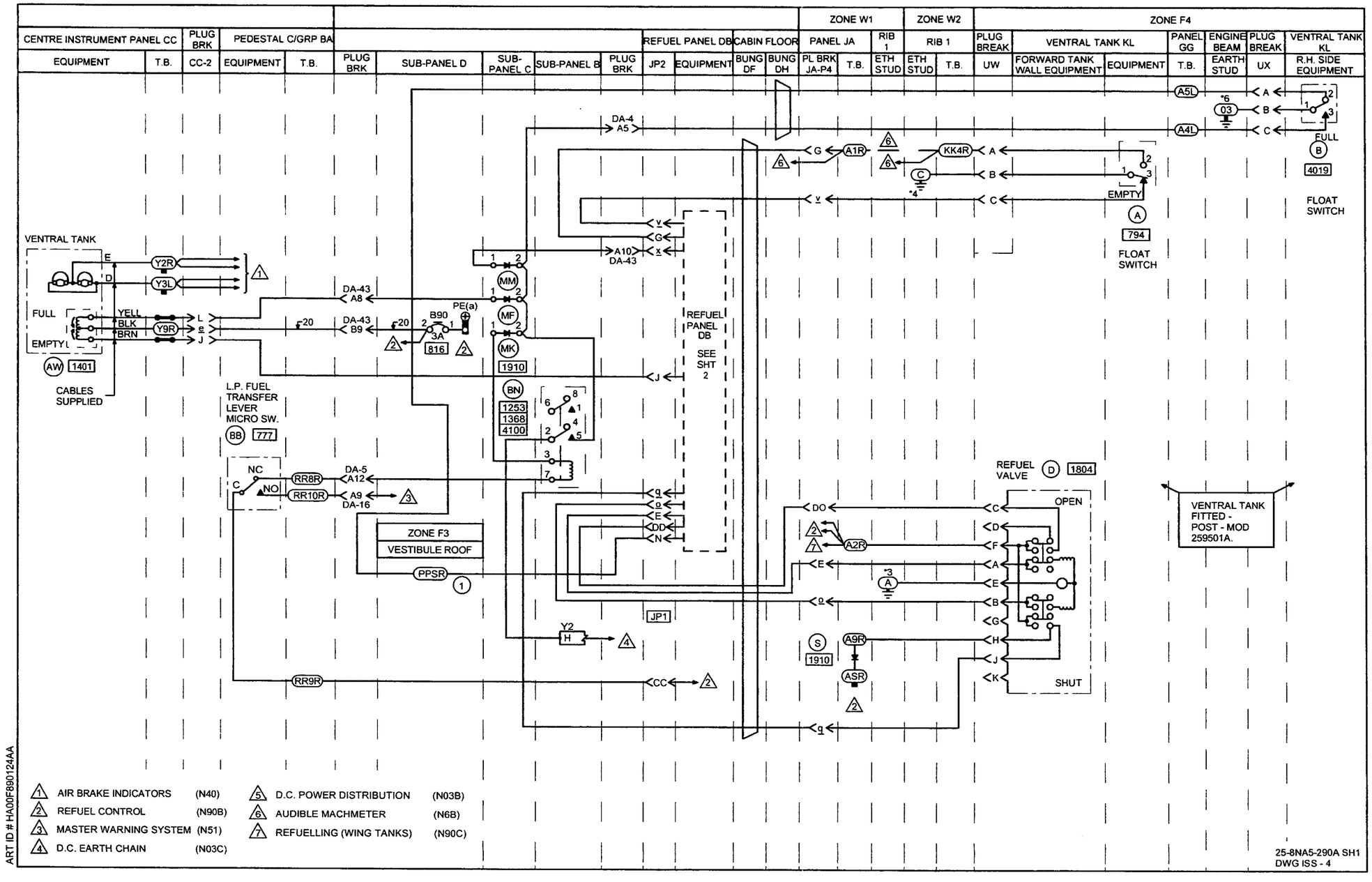
CENTRE INSTRUMENT PANEL CC
PLUG BRK
PEDESTAL C/GRP BA
EQUIPMENT
T.B.
CC-2
EQUIPMENT
T.B.
PLUG BRK
SUB-PANEL D
SUB-PANEL C
SUB-PANEL B
PLUG BRK
REFUEL PANEL DB
CABIN FLOOR
JP2
EQUIPMENT
BUNG DF
BUNG DH
ZONE W1
PANEL JA
PL BRK JA-P4
T.B.
RIB 1
ETH STUD
ZONE W2
RIB 1
ETH STUD
T.B.
ZONE F4
PLUG BREAK
UW
VENTRAL TANK KL
FORWARD TANK WALL EQUIPMENT
EQUIPMENT
PANEL GG
T.B.
ENGINE BEAM
EARTH STUD
PLUG BREAK
UX
VENTRAL TANK KL
R.H. SIDE EQUIPMENT
VENTRAL TANK
FULL
EMPTY
CABLES SUPPLIED
L.P. FUEL TRANSFER LEVER MICRO SW.
ZONE F3
VESTIBULE ROOF
REFUEL PANEL DB
SEE SHT 2
REFUEL VALVE
OPEN
SHUT
FLOAT SWITCH
VENTRAL TANK FITTED - POST - MOD 259501A.
1 AIR BRAKE INDICATORS (N40)
2 REFUEL CONTROL (N90B)
3 MASTER WARNING SYSTEM (N51)
4 D.C. EARTH CHAIN (N03C)
5 D.C. POWER DISTRIBUTION (N03B)
6 AUDIBLE MACHMETER (N6B)
7 REFUELLING (WING TANKS) (N90C)
ART ID # HA00F890124AA
25-8NA5-290A SH1
DWG ISS - 4

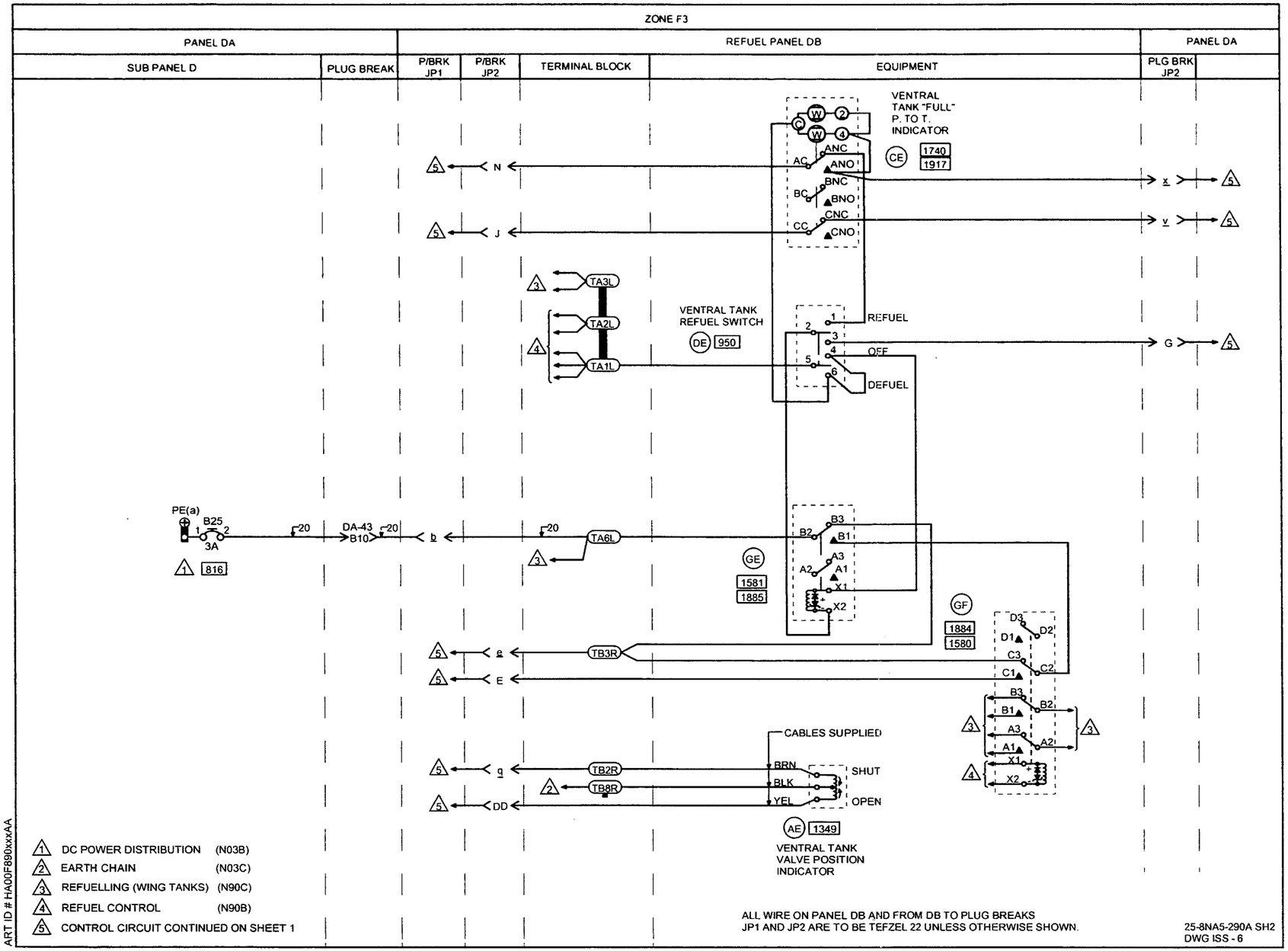
ZONE F3
PANEL DA
REFUEL PANEL DB
PANEL DA
SUB PANEL D
PLUG BREAK
P/BRK JP1
P/BRK JP2
TERMINAL BLOCK
EQUIPMENT
PLG BRK JP2
VENTRAL TANK "FULL" P. TO T. INDICATOR
CE
1740
1917
ANC
ANO
BNC
BNO
CNC
CNO
N
J
x
v
TA3L
TA2L
TA1L
VENTRAL TANK REFUEL SWITCH
DE
950
REFUEL
OFF
DEFUEL
G
PE(a)
B25
3A
20
DA-43
B10
b
TA6L
GE
1581
1885
GF
1884
1580
TB3R
e
E
CABLES SUPPLIED
TB2R
TB8R
q
DD
BRN
BLK
YEL
SHUT
OPEN
AE
1349
VENTRAL TANK VALVE POSITION INDICATOR
816
1 DC POWER DISTRIBUTION (N03B)
2 EARTH CHAIN (N03C)
3 REFUELLING (WING TANKS) (N90C)
4 REFUEL CONTROL (N90B)
5 CONTROL CIRCUIT CONTINUED ON SHEET 1
ALL WIRE ON PANEL DB AND FROM DB TO PLUG BREAKS
JP1 AND JP2 ARE TO BE TEFZEL 22 UNLESS OTHERWISE SHOWN.
25-8NA5-290A SH2
DWG ISS - 6
ART ID # HA00F890xxxAA

IDENT	PART NUMBER	1234567 NOMENCLATURE	EFFECT FROM TO	UNITS PER ASSY
		PRESSURE REFUELLING, VENTRAL TANK	113113 124124 144144	
	25-8NA5-290A	WIRING DIAGRAM- (MOD 259499A) (MOD 25F737C)		RF
A-GG	HWBUN1146D10B	.TERMINAL BLOCK- (VK0574)		1
A-JA	HWBUN1146D10B	.TERMINAL BLOCK- (VK0574)		1
A-KL	3515000-149	.FLOAT SWITCH-LOW LEVEL (UNIT EXCHANGE ITEM) (VU1918)		1
AE-DB	6333-014-01A4	.MAGNETIC INDICATOR-SHUT (VK0653)		1
AW-CC	6333-019-01A	.MAGNETIC INDICATOR- (VK0653)		1
B-KL	3515000-105	.FLOAT SWITCH-HIGH LEVEL (VU1918)		1
BB-BA	1HSN64	.MICROSWITCH- (V91929) (OPT (VK6596))		1
BN-DAB	HDS8SF3J03	.RELAY- (VK1793) (USED WITH SOCKET: RSE120074 (V58982))		1
B25-DAD	483TCG11J25-3A	.CIRCUIT BREAKER-3AMP (VU0091)		1
B90-DAD	483TCG11J25-3A	.CIRCUIT BREAKER-3AMP (VU0091)		1
CC2-P	BAEREF000003522	.CONNECTOR-PIN (6026-20-41PWCONDD (VK1793))		1
CC2-R	BAEREF000004392	.CONNECTOR-SOCKET (6027-20-41SWCONDA (VK1793)) (PRE MOD 253252A)		1
CC2-R	BAEREF000003124	.CONNECTOR-SOCKET (6027-20-41SWCONDB (VK1793)) (MOD 253252A)		1
CE-DB	99-212	.INDICATOR-FULL (V32245)		1
D-KL	HTE9044-001	.ACTUATOR- (VU1918) (USED WITH CONNECTOR: PVW6G12-10SNS03 (V71468))		1
		MISSING ITEM NO. NOT APPLICABLE		

– ITEM NOT ILLUSTRATED

IDENT	PART NUMBER	1234567 NOMENCLATURE	EFFECT FROM TO	UNITS PER ASSY
DA16-P	MTC100YH1-003	.SHELL-PLUG (VK1010) (USED WITH WAFERS: TYPE A, MTC100KT1-1101 TYPE B, MTC100KT1-1102)		1
DA16-R	MTC100YH1-004	.SHELL-RECEPTACLE (VK1010) (USED WITH WAFERS: TYPE A, MTC100KT1-1103 TYPE B, MTC100KT1-1104)		1
DA4-P	MTC100YH2-009	.SHELL-PLUG (VK1010) (USED WITH WAFERS: TYPE A, MTC100KT2-1101 TYPE B, MTC100KT2-1102)		1
DA4-R	MTC100YH2-010	.SHELL-RECEPTACLE (VK1010) (USED WITH WAFERS: TYPE A, MTC100KT2-1103 TYPE B, MTC100KT2-1104)		1
DA43-P	MTC100YH1-003	.SHELL-PLUG (VK1010) (USED WITH WAFERS: TYPE A, MTC100KT1-1101 TYPE B, MTC100KT1-1102)		1
DA43-R	MTC100YH1-004	.SHELL-RECEPTACLE (VK1010) (USED WITH WAFERS: TYPE A, MTC100KT1-1103 TYPE B, MTC100KT1-1104)		1
DA5-P	MTC100YH2-009	.SHELL-PLUG (VK1010) (USED WITH WAFERS: TYPE A, MTC100KT2-1101 TYPE B, MTC100KT2-1102)		1
DA5-R	MTC100YH2-010	.SHELL-RECEPTACLE (VK1010) (USED WITH WAFERS: TYPE A, MTC100KT2-1103 TYPE B, MTC100KT2-1104)		1
DE-DB	2TP1-1	.SWITCH- (V91929) (OPT (VK6596))	113113	1
DE-DB	2TP1-1M	.SWITCH- (V91929) (OPT (VK6596))	124124 144144	1
DF	422250-17	.BUNG- (VK1793)		1
DH	422254-9	.BUNG- (VK1793)		1
		MISSING ITEM NO. NOT APPLICABLE		

– ITEM NOT ILLUSTRATED

IDENT	PART NUMBER	1234567 NOMENCLATURE	EFFECT FROM TO	UNITS PER ASSY
GE-DB	M300-1264	.RELAY- (VK6265) (USED WITH BASE: SO-1049-8309)		1
GF-DB	M400-1265	.RELAY- (VK6265) (USED WITH BASE: SO-1048-8308)		1
JP1-DB-P	RR06E22-55PN059	.CONNECTOR-PIN (VK1793))		1
JP1-DB-R	BAEREF000004012	.CONNECTOR-SOCKET (6027-22-55SNCONDD (VK1793))		1
JP2-DB-P	RR06E22-55PW059	.CONNECTOR-PIN (VK1793))		1
JP2-DB-R	BAEREF000004362	.CONNECTOR-SOCKET (6027-22-55SWCONDD (VK1793))		1
KK	72544-030-0AV2	.TERMINAL BLOCK- (VK0574)		1
MF-DAC	BYW54	.DIODE- (VK0004)		1
MK-DAC	BYW54	.DIODE- (VK0004)		1
MM-DAC	BYW54	.DIODE- (VK0004)		1
PP	HWBUN1146D10B	.TERMINAL BLOCK- (VK0574)		1
P4-JA-P	BAEREF000004011	.CONNECTOR-PIN (6026-22-55PNCONDD (VK1793))		1
P4-JA-R	BAEREF000004012	.CONNECTOR-SOCKET (6027-22-55SNCONDD (VK1793))		1
RR-BA	HWBUN1146D5B	.TERMINAL BLOCK- (VK0574)		1
S-JA	1N4005	.DIODE- (VK5519) (OPT BYW54 (VK0004))		1
TA-DB	HWBUN1736D10B	.TERMINAL BLOCK- (VK0574)		1
TB-DB	HWBUN1736D10B	.TERMINAL BLOCK- (VK0574)		1
UW-P	MS3476L08-33PN	.CONNECTOR-PLUG (V96906) (USED WITH OUTLET: MS3152-08)		1
		MISSING ITEM NO. NOT APPLICABLE		

– ITEM NOT ILLUSTRATED

IDENT	PART NUMBER	1234567 NOMENCLATURE	EFFECT FROM TO	UNITS PER ASSY
UW-R	MS3470L08-33SN	.CONNECTOR-SOCKET (V96906) (USED WITH OUTLET: MS3152-08)		1
UX-P	MS3476L08-33PN	.CONNECTOR-PLUG (V96906) (USED WITH OUTLET: MS3152-08)		1
UX-R	MS3470L08-33SN	.CONNECTOR-SOCKET (V96906) (USED WITH OUTLET: MS3152-08)		1
Y-CC	HWBUN1736D10B	.TERMINAL BLOCK- (VK0574)		1
Y2-DAB	MRTB20E04-111	.TERMINAL JUNCTION MODULE- (V14283)		1
		MISSING ITEM NO. NOT APPLICABLE		

– ITEM NOT ILLUSTRATED

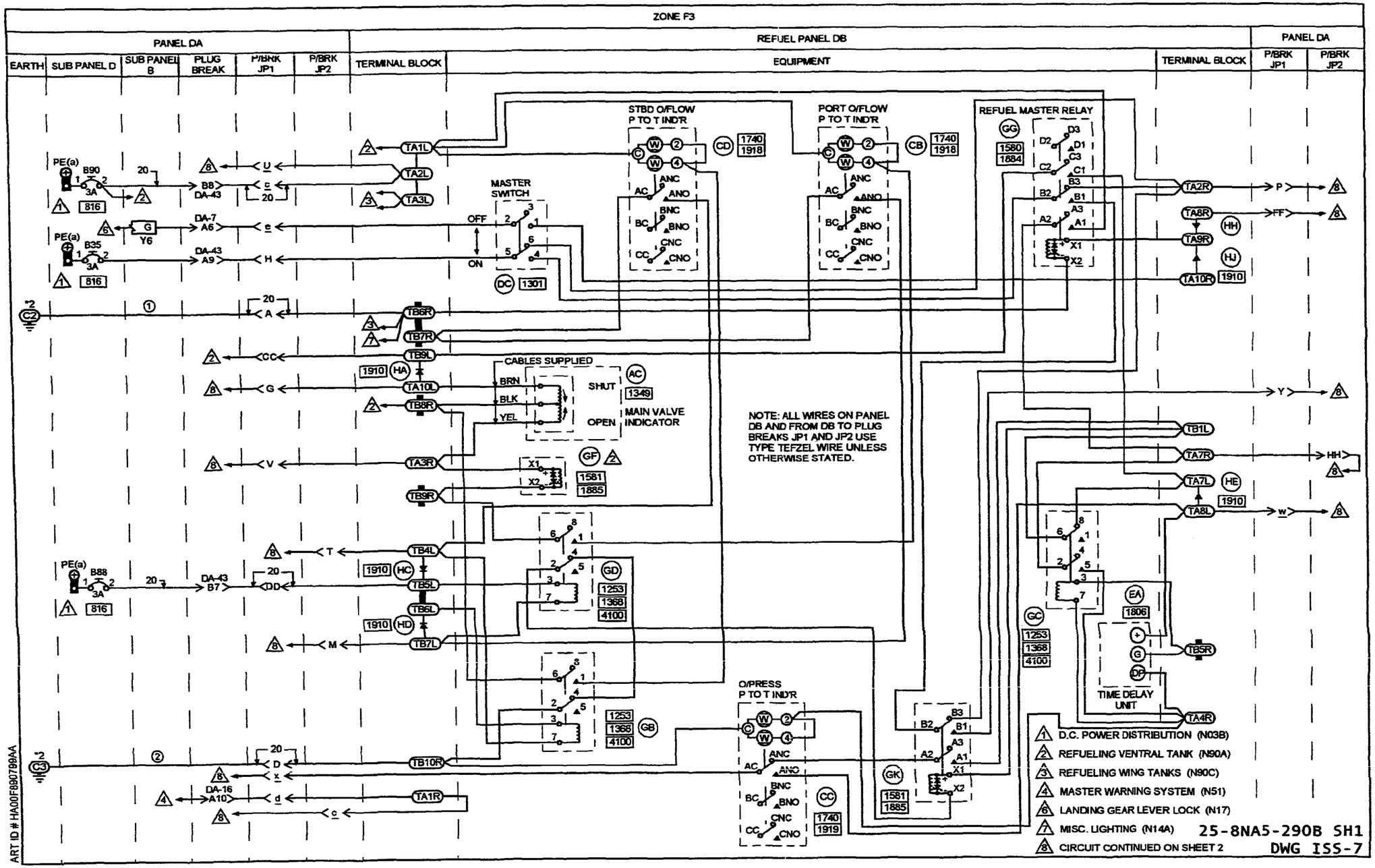
ZONE F3
PANEL DA
REFUEL PANEL DB
PANEL DA
EARTH
SUB PANEL D
SUB PANEL B
PLUG BREAK
P/BRK JP1
P/BRK JP2
TERMINAL BLOCK
EQUIPMENT
TERMINAL BLOCK
P/BRK JP1
P/BRK JP2
STBD O/FLOW P TO T IND'R
PORT O/FLOW P TO T IND'R
REFUEL MASTER RELAY
MASTER SWITCH
OFF
ON
CABLES SUPPLIED
SHUT
OPEN
MAIN VALVE INDICATOR
NOTE: ALL WIRES ON PANEL DB AND FROM DB TO PLUG BREAKS JP1 AND JP2 USE TYPE TEFZEL WIRE UNLESS OTHERWISE STATED.
O/PRESS P TO T IND'R
TIME DELAY UNIT
1 D.C. POWER DISTRIBUTION (N03B)
2 REFUELING VENTRAL TANK (N90A)
3 REFUELING WING TANKS (N90C)
4 MASTER WARNING SYSTEM (N51)
6 LANDING GEAR LEVER LOCK (N17)
7 MISC. LIGHTING (N14A)
8 CIRCUIT CONTINUED ON SHEET 2
25-8NA5-290B SH1
DWG ISS-7
ART ID # HA00F690799AA

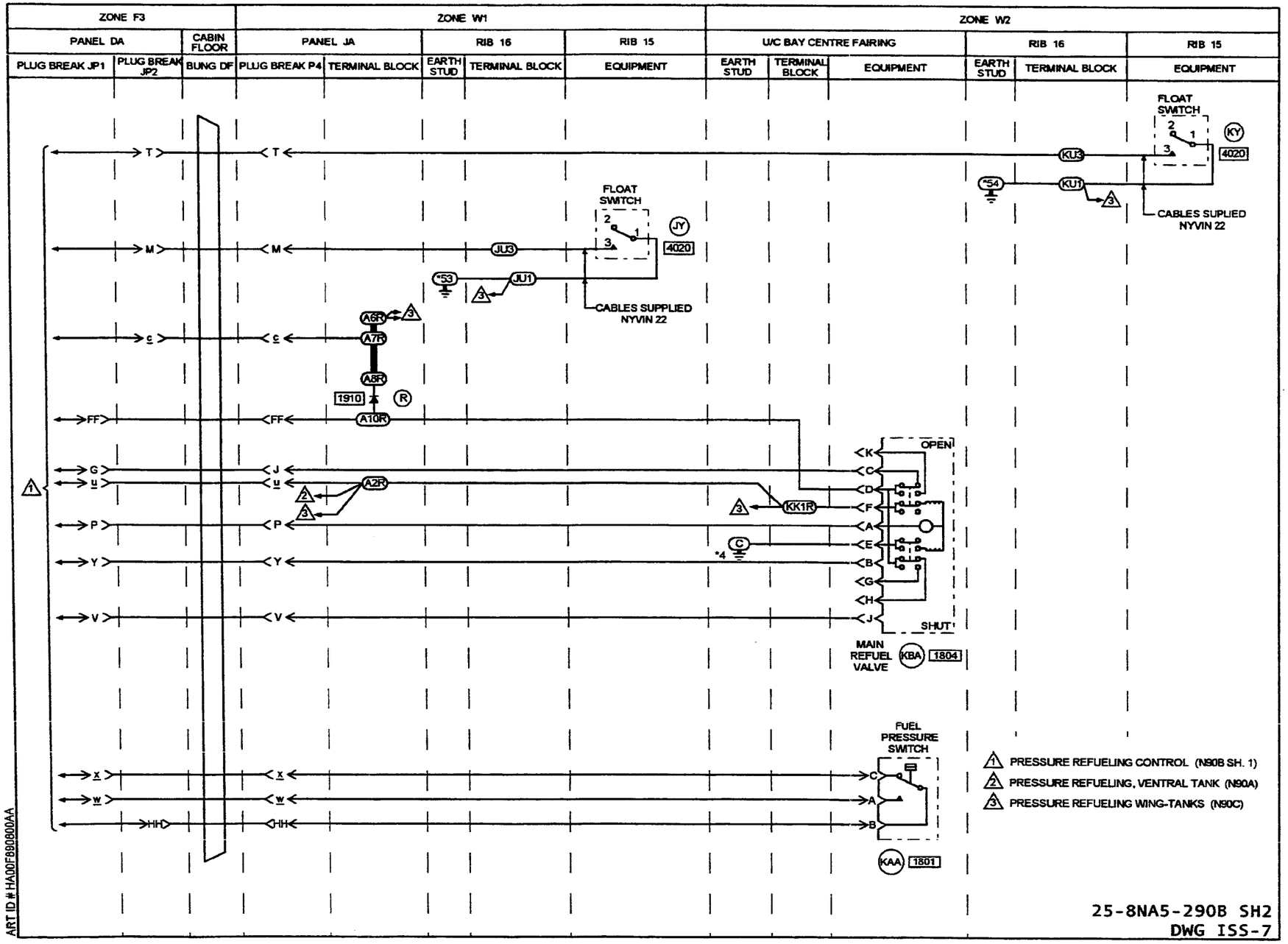
ZONE F3
ZONE W1
ZONE W2
PANEL DA
CABIN FLOOR
PANEL JA
RIB 16
RIB 15
U/C BAY CENTRE FAIRING
RIB 16
RIB 15
PLUG BREAK JP1
PLUG BREAK JP2
BUNG DF
PLUG BREAK P4
TERMINAL BLOCK
EARTH STUD
TERMINAL BLOCK
EQUIPMENT
EARTH STUD
TERMINAL BLOCK
EQUIPMENT
EARTH STUD
TERMINAL BLOCK
EQUIPMENT
FLOAT SWITCH
KY
4020
KU3
KU1
*54
CABLES SUPLIED NYVIN 22
FLOAT SWITCH
JY
4020
JU3
JU1
*53
CABLES SUPPLIED NYVIN 22
A6R
A7R
A8R
1910
R
A10R
A2R
KK1R
C
*4
OPEN
SHUT
MAIN REFUEL VALVE
KBA
1804
FUEL PRESSURE SWITCH
KAA
1801
1 PRESSURE REFUELING CONTROL (N90B SH. 1)
2 PRESSURE REFUELING, VENTRAL TANK (N90A)
3 PRESSURE REFUELING WING-TANKS (N90C)
ART ID # HA00F980800AA
25-8NA5-290B SH2
DWG ISS-7

IDENT	PART NUMBER	1234567 NOMENCLATURE	EFFECT FROM TO	UNITS PER ASSY
		PRESSURE REFUELLING CONTROL	091179 181232 234234 236236 238276	
	25-8NA5-290B	WIRING DIAGRAM- (MOD 253149C) (MOD 25F505A)		RF
A-JA	HWBUN1146D10B	.TERMINAL BLOCK- (VK0574)		1
AC-DB	6333-014-01A4	.MAGNETIC INDICATOR-MAIN VALVE (VK0653)		1
B35-DAD	483TCG11J25-3A	.CIRCUIT BREAKER-3AMP (VU0091)		1
B88-DAD	483TCG11J25-3A	.CIRCUIT BREAKER-3AMP (VU0091)		1
B90-DAD	483TCG11J25-3A	.CIRCUIT BREAKER-3AMP (VU0091)		1
CB-DB	99-212	.INDICATOR- (V32245)		1
CC-DB	99-212	.INDICATOR- (V32245)		1
CD-DB	99-212	.INDICATOR- (V32245)		1
DA16-P	MTC100YH1-003	.SHELL-PLUG (VK1010) (USED WITH WAFERS: TYPE A, MTC100KT1-1101 TYPE B, MTC100KT1-1102)	091179 181232 234234 236236 238254	1
DA16-P	MTC100YH1-003	.SHELL-PLUG (VK1010) (USED WITH INSERT: MTC100YC1-005)	255276	1
DA16-R	MTC100YH1-004	.SHELL-RECEPTACLE (VK1010) (USED WITH WAFERS: TYPE A, MTC100KT1-1103 TYPE B, MTC100KT1-1104)	091179 181232 234234 236236 238254	1
DA16-R	MTC100YH1-004	.SHELL-RECEPTACLE (VK1010) (USED WITH INSERT: MTC100YC1-006)	255276	1
DA43-P	MTC100YH1-003	.SHELL-PLUG (VK1010) (USED WITH WAFERS: TYPE A, MTC100KT1-1101 TYPE B, MTC100KT1-1102)	091179 181232 234234 236236 238254	1

MISSING ITEM NO. NOT APPLICABLE

– ITEM NOT ILLUSTRATED

IDENT	PART NUMBER	1234567 NOMENCLATURE	EFFECT FROM TO	UNITS PER ASSY
DA43-P	MTC100YH1-003	.SHELL-PLUG (VK1010) (USED WITH INSERT: MTC100YC1-005)	255276	1
DA43-R	MTC100YH1-004	.SHELL-RECEPTACLE (VK1010) (USED WITH WAFERS: TYPE A, MTC100KT1-1103 TYPE B, MTC100KT1-1104)	091179 181232 234234 236236 238254	1
DA43-R	MTC100YH1-004	.SHELL-RECEPTACLE (VK1010) (USED WITH INSERT: MTC100YC1-006)	255276	1
DA7-P	MTC100YH1-003	.SHELL-PLUG (VK1010) (USED WITH WAFERS: TYPE A, MTC100KT1-1101 DUMMY, MTCX1X100-100)	091179 181232 234234 236236 238254	1
DA7-P	MTC100YH1-003	.SHELL-PLUG (VK1010) (USED WITH INSERT: MTC100YC1-005)	255276	1
DA7-R	MTC100YH1-004	.SHELL-RECEPTACLE (VK1010) (USED WITH WAFERS: TYPE A, MTC100KT1-1103 DUMMY, MTCX1X100-100)	091179 181232 234234 236236 238254	1
DA7-R	MTC100YH1-004	.SHELL-RECEPTACLE (VK1010) (USED WITH INSERT: MTC100YC1-006)	255276	1
DC-DB	2TP1-3	.SWITCH-MASTER (V91929) (OPT (VK6596))	091116	1
DC-DB	2TP1-3M	.SWITCH-MASTER (V91929) (OPT (VK6596))	117179 181232 234234 236236 238276	1
DF	422250-17	.BUNG- (VK1793)		1
EA-DB	25-7NF893A	.TIME DELAY UNIT		1
GB-DB	HDS8SF3J06	.RELAY- (VK1793) (USED WITH SOCKET: RSE120074 (V58982))	091116	1
		MISSING ITEM NO. NOT APPLICABLE		

– ITEM NOT ILLUSTRATED

IDENT	PART NUMBER	1234567 NOMENCLATURE	EFFECT FROM TO	UNITS PER ASSY
GB-DB	HDS8SF3J03	.RELAY- (VK1793) (USED WITH SOCKET: RSE120074 (V58982))	117179 181232 234234 236236 238276	1
GC-DB	HDS8SF3J06	.RELAY- (VK1793) (USED WITH SOCKET: RSE120074 (V58982))	091116	1
GC-DB	HDS8SF3J03	.RELAY- (VK1793) (USED WITH SOCKET: RSE120074 (V58982))	117179 181232 234234 236236 238276	1
GD-DB	HDS8SF3J06	.RELAY- (VK1793) (USED WITH SOCKET: RSE120074 (V58982))	091116	1
GD-DB	HDS8SF3J03	.RELAY- (VK1793) (USED WITH SOCKET: RSE120074 (V58982))	117179 181232 234234 236236 238276	1
GF-DB	M400-1265	.RELAY- (VK6265) (USED WITH SOCKET: M12883-40-23 (V81349))		1
GG-DB	M400-1265	.RELAY-REFUEL MASTER (VK6265) (USED WITH SOCKET: M12883-40-23 (V81349))		1
GK-DB	M300-1264	.RELAY- (VK6265) (USED WITH SOCKET: M12883-41-19 (V81349))		1
HA-DB	BYW54	.DIODE- (VK0004)		1
HC-DB	BYW54	.DIODE- (VK0004)		1
HD-DB	BYW54	.DIODE- (VK0004)		1
HE-DB	BYW54	.DIODE- (VK0004)		1
HH-DB	BYW54	.DIODE- (VK0004)		1
		MISSING ITEM NO. NOT APPLICABLE		

– ITEM NOT ILLUSTRATED

IDENT	PART NUMBER	1234567 NOMENCLATURE	EFFECT FROM TO	UNITS PER ASSY
HJ-DB	BYW54	.DIODE- (VK0004)		1
JP1-DB-P	RR06E22-55PN059	.CONNECTOR-PIN (VK1793)		1
JP1-DB-R	BAEREF000004012	.CONNECTOR-SOCKET (6027-22-55SNCONDD (VK1793))		1
JP2-DB-P	RR06E22-55PW059	.CONNECTOR-PIN (VK1793)		1
JP2-DB-R	BAEREF000004362	.CONNECTOR-SOCKET (6027-22-55SWCONDD (VK1793))		1
JU	HWBUN1146S5B	.TERMINAL BLOCK- (VK0574)		1
JY	3515000-106	.SWITCH-FLOAT (VU1918)		1
KAA	HTE690009	.SWITCH-FUEL PRESSURE (VU1918) (USED WITH CONNECTOR: PVW6G8-363SNR03 (V71468) (OPT (VK0316))) (OPT PVW6G8-33SNR57 (V71468)) (OPT 6026-8-33SNCONDE (VK1793))		1
KBA	HTE9044-001	.ACTUATOR- MAIN REFUEL VALVE (VU1918) (USED WITH CONNECTOR: PVW6G12-10SNS03 (V71468) (OPT (VK0316)))		1
KK	72544-030-0AV2	.TERMINAL BLOCK- (VK0574)		1
KU	HWBUN1146S5B	.TERMINAL BLOCK- (VK0574)		1
KY	3515000-106	.SWITCH-FLOAT (VU1918)		1
P4-JA-P	BAEREF000004011	.CONNECTOR-PIN (6026-22-55PNCONDD (VK1793))		1
P4-JA-R	BAEREF000004012	.CONNECTOR-SOCKET (6027-22-55SNCONDD (VK1793))		1
		MISSING ITEM NO. NOT APPLICABLE		

– ITEM NOT ILLUSTRATED

IDENT	PART NUMBER	1234567 NOMENCLATURE	EFFECT FROM TO	UNITS PER ASSY
R-JA	25-7NF1815-5A	.DIODE ASSY- (COMPRISING OF: DIODE 1N4005 (VK5519) (OPT BYW54 (VK0004)))		1
TA-DB	HWBUN1736D10B	.TERMINAL BLOCK- (VK0574)		1
TB-DB	HWBUN1736D10B	.TERMINAL BLOCK- (VK0574)		1
Y6-DAB	MRTB20E04-111	.TERMINAL JUNCTION MODULE- (V14283)		1

MISSING ITEM NO. NOT APPLICABLE

- ITEM NOT ILLUSTRATED

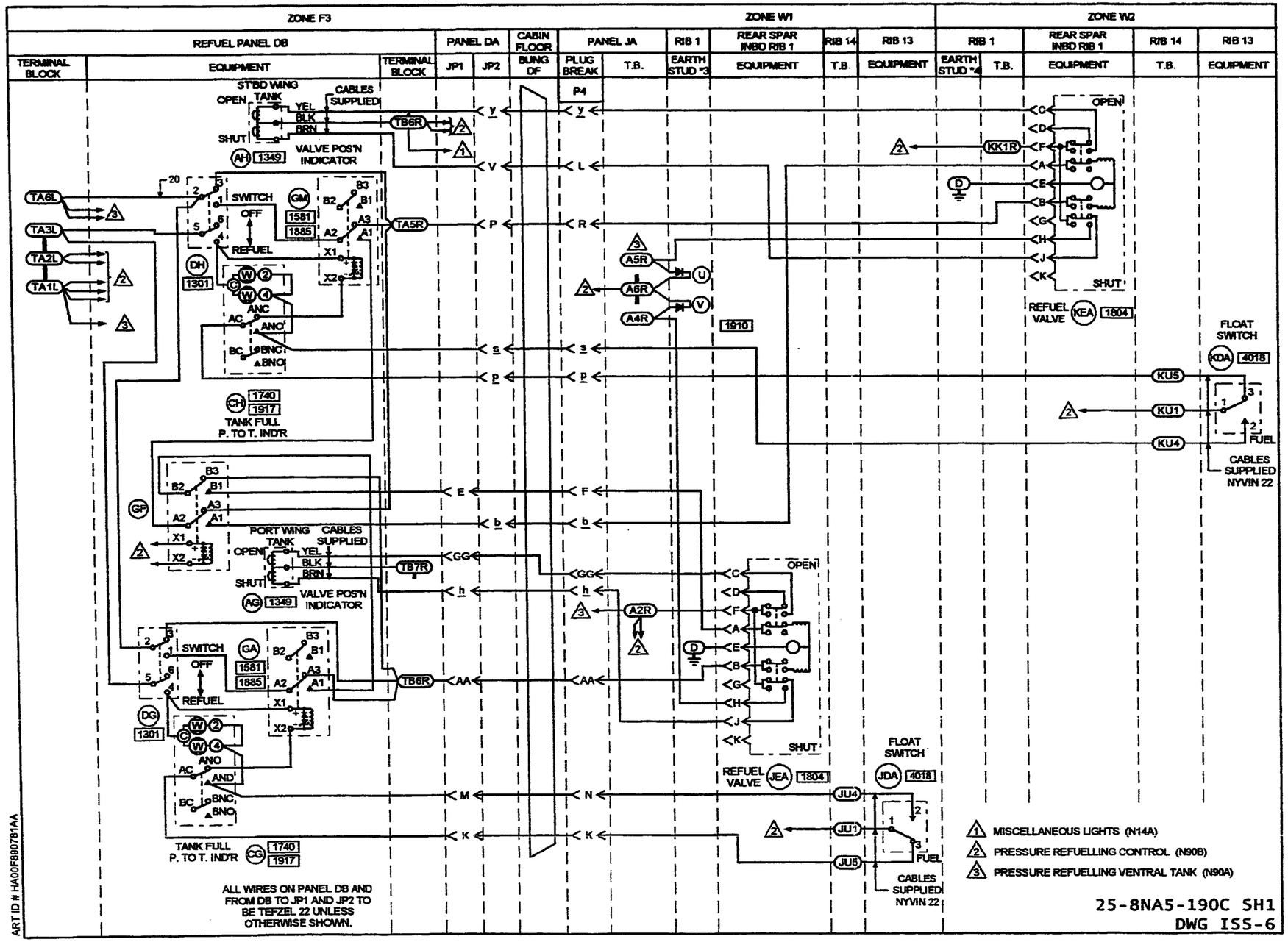
ZONE F3
ZONE W1
ZONE W2
REFUEL PANEL DB
PANEL DA
CABIN FLOOR
PANEL JA
RIB 1
REAR SPAR INBD RIB 1
RIB 14
RIB 13
TERMINAL BLOCK
EQUIPMENT
JP1
JP2
BUNG DF
PLUG BREAK
T.B.
EARTH STUD #3
EARTH STUD #4
P4
ST'BD WING TANK
CABLES SUPPLIED
OPEN
SHUT
YEL
BLK
BRN
TB6R
VALVE POS'N INDICATOR
AH 1349
SWITCH
OFF
REFUEL
GM
1581
1885
TA5R
TA6L
TA3L
TA2L
TA1L
DH
1301
ANC
ANO
BNC
BNO
CH
1740
1917
TANK FULL P. TO T. IND'R
GF
PORT WING TANK
TB7R
AG 1349
GA
DG
TB6R
TANK FULL P. TO T. IND'R
CG 1740 1917
A5R
A6R
A4R
A2R
U
V
1910
KK1R
D
REFUEL VALVE
KEA 1804
FLOAT SWITCH
KDA 4018
KU5
KU1
KU4
FUEL
CABLES SUPPLIED NYVIN 22
REFUEL VALVE
JEA 1804
JDA 4018
JU4
JU1
JU5
ALL WIRES ON PANEL DB AND FROM DB TO JP1 AND JP2 TO BE TEFZEL 22 UNLESS OTHERWISE SHOWN.
1 MISCELLANEOUS LIGHTS (N14A)
2 PRESSURE REFUELLING CONTROL (N90B)
3 PRESSURE REFUELLING VENTRAL TANK (N90A)
25-8NA5-190C SH1
DWG ISS-6
ART ID # HA00F890781AA

IDENT	PART NUMBER	1234567 NOMENCLATURE	EFFECT FROM TO	UNITS PER ASSY
		PRESSURE REFUELLING-WING TANKS	091232 234234 236236 238276	
	25-8NA5-190C	WIRING DIAGRAM- (MOD 253149C) (MOD 25F505A)		RF
A-JA	HWBUN1146D10B	.TERMINAL BLOCK- (VK0574)		1
AG-DB	6333-014-01A4	.MAGNETIC INDICATOR- (VK0653)		1
AH-DB	6333-014-01A4	.MAGNETIC INDICATOR- (VK0653)		1
CG-DB	99-212	.INDICATOR- (V32245)		1
CH-DB	99-212	.INDICATOR- (V32245)		1
DF	422250-17	.BUNG- (VK1793)		1
DG-DB	2TP1-3	.SWITCH- (V91929) (OPT (VK6596))		1
DH-DB	2TP1-3	.SWITCH- (V91929) (OPT (VK6596))		1
GA-DB	M300-1264	.RELAY- (VK6265) (USED WITH SOCKET: S01049-8309 (OPT M12883-41-16 (V81349)))		1
GF-DB	M400-1265	.RELAY- (VK6265) (USED WITH BASE: S01048-8308 (OPT M12883-40-19 (V81349)))		1
GM-DB	M300-1264	.RELAY- (VK6265) (USED WITH SOCKET: S01049-8309 (OPT M12883-41-16 (V81349)))		1
JDA	3515000-107	.FLOAT SWITCH- (VU1918)		1
		MISSING ITEM NO. NOT APPLICABLE		

– ITEM NOT ILLUSTRATED

IDENT	PART NUMBER	1234567 NOMENCLATURE	EFFECT FROM TO	UNITS PER ASSY
JEA	HTE9044-001	.ACTUATOR- (VU1918) (USED WITH CONNECTOR: PVW6G12-10SNS03 (V71468) (OPT (VK0316)))		1
JP1-DB-P	RR06E22-55PN059	.CONNECTOR-PIN (VK1793)		1
JP1-DB-R	BAEREF000004012	.CONNECTOR-SOCKET (6027-22-55SNCONDD (VK1793))		1
JP2-DB-P	RR06E22-55PW059	.CONNECTOR-PIN (VK1793)		1
JP2-DB-R	BAEREF000004362	.CONNECTOR-SOCKET (6027-22-55SWCONDD (VK1793))		1
JU	HWBUN1146S5B	.TERMINAL BLOCK- (VK0574)		1
KDA	3515000-107	.FLOAT SWITCH- (VU1918)		1
KEA	HTE9044-001	.ACTUATOR- (VU1918) (USED WITH CONNECTOR: PVW6G12-10SNS03 (V71468) (OPT (VK0316)))		1
KK	72544-030-0AV2	.TERMINAL BLOCK- (VK0574)		1
KU	HWBUN1146S5B	.TERMINAL BLOCK- (VK0574)		1
P4-JA-P	BAEREF000004011	.CONNECTOR-PIN (6026-22-55PNCONDD (VK1793))		1
P4-JA-R	BAEREF000004012	.CONNECTOR-SOCKET (6027-22-55SNCONDD (VK1793))		1
TA-DB	HWBUN1736D10B	.TERMINAL BLOCK- (VK0574)		1
TB-DB	HWBUN1736D10B	.TERMINAL BLOCK- (VK0574)		1
U-JA	BYW54	.DIODE- (VK0004)		1
V-JA	BYW54	.DIODE- (VK0004)		1
		MISSING ITEM NO. NOT APPLICABLE		

– ITEM NOT ILLUSTRATED

FUEL TRANSFER WARNING

ZONE F2		ZONE F3	
CONTROL PEDESTAL CONNECTOR GROUP BA		PANEL DA	
EQUIPMENT	TERMINAL BLOCK	PLUG BREAK	SUB PANEL D

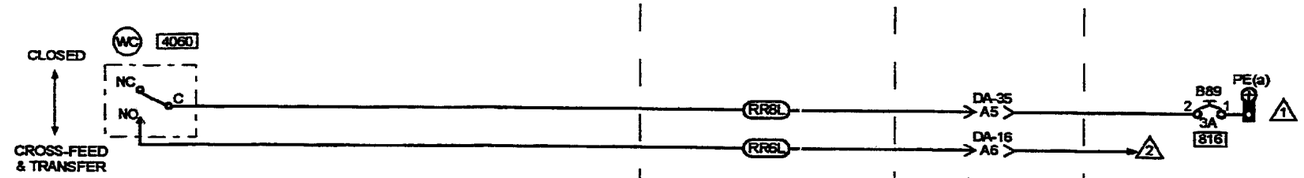

1 DC POWER DISTRIBUTION (N03B)
2 MASTER WARNING SYSTEM (N51)

25-8NA5-158 SH1
DWG ISS-5

ART ID # HA0058807ZZZZ

IDENT	PART NUMBER	1234567 NOMENCLATURE	EFFECT FROM TO	UNITS PER ASSY
	25-8NA5-158	TRANSFER FUEL COCK WARNING WIRING DIAGRAM- (MOD 253149C) (MOD 25F505A)	091276	RF
B89-DAD	483TCG11J25-3A	.CIRCUIT BREAKER-3AMP (VU0091)		1
DA16-P	MTC100YH1-003	.SHELL-PLUG (VK1010) (USED WITH WAFERS: TYPE A, MTC100KT1-1101 TYPE B, MTC100KT1-1102)	091254	1
DA16-P	MTC100YH1-003	.SHELL-PLUG (VK1010) (USED WITH INSERTS: MTC100YC1-005)	255276	1
DA16-R	MTC100YH1-004	.SHELL-RECEPTACLE (VK1010) (USED WITH WAFERS: TYPE A, MTC100KT1-1103 TYPE B, MTC100KT1-1104)	091254	1
DA16-R	MTC100YH1-004	.SHELL-RECEPTACLE (VK1010) (USED WITH INSERT: MTC100YC1-006)	255276	1
DA35-P	MTC100YH2-009	.SHELL-PLUG (VK1010) (USED WITH WAFERS: TYPE A, MTC100KT2-1101 TYPE B, MTC100KT2-1102)	091254	1
DA35-P	MTC100YH2-009	.SHELL-PLUG (VK1010) (USED WITH INSERTS: PRIMARY MTC100YC1-001 SECONDARY MTC100YC1-002)	255276	1
DA35-R	MTC100YH2-010	.SHELL-RECEPTACLE (VK1010) (USED WITH WAFERS: TYPE A, MTC100KT2-1103 TYPE B, MTC100KT2-1104)	091254	1
DA35-R	MTC100YH2-010	.SHELL-RECEPTACLE (VK1010) (USED WITH INSERTS: PRIMARY MTC100YC1-003 SECONDARY MTC100YC1-004)	255276	1
RR-BA	HWBUN1146D10B	.TERMINAL BLOCK- (VK0574)		1
WC-BA	1HSN66	.MICRO SWITCH- (VK6596)		1
		MISSING ITEM NO. NOT APPLICABLE		

– ITEM NOT ILLUSTRATED

CHAPTER 29

HYDRAULIC POWER

CHAPTER 29 - HYDRAULICS

TABLE OF CONTENTS

SUBJECT	CHAPTER SECTION UNIT	FIGURE	EFFECT
EMERGENCY	29-31-00		
EMERGENCY HYDRAULIC TANK LOW LEVEL INDICATING	29-31-10	2	091276
PRESSURE INDICATION	29-32-00		
HYDRAULIC SYSTEMS PRESSURE INDICATOR	29-32-10	5	091276

CH-SECT-UNIT-FIG	PAGE NO.	DATE
*29	1	AUG 31/03
29-31-00	1	MAY 31/02
29-31-10- 2	0	MAY 31/02
29-31-10- 2	1	MAY 31/02
29-32-00	1	MAY 31/02
29-32-10- 5	0	MAY 31/02
29-32-10- 5	1	MAY 31/02
29-32-10- 5	2	MAY 31/02
29-32-10- 5	3	MAY 31/02
29-32-10- 5	4	MAY 31/02

CH-SECT-UNIT-FIG	PAGE NO.	DATE

*THE ASTERISK INDICATES PAGES CHANGED OR ADDED BY THE CURRENT REVISION

EMERGENCY

ZONE F1	ZONE F2		ZONE F3		
EMERGENCY HYDRAULIC TANK FLOAT SWITCH	BUNG		PANEL DA		
EQUIPMENT	CV		PLUG BREAK	SUB PANEL D	

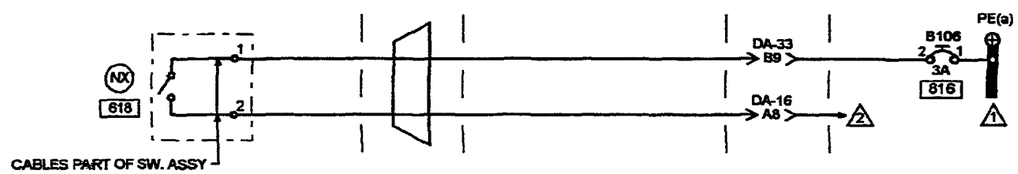

1 D.C. POWER DISTRIBUTION (N03B)
2 MASTER WARNING SYSTEM (N51)

25-8NA5-179 SH1
DWG ISS-5

ART ID # HA00F880778AA

IDENT	PART NUMBER	1234567 NOMENCLATURE	EFFECT FROM TO	UNITS PER ASSY
		EMERGENCY HYDRAULIC TANK LOW LEVEL INDICATING	091276	
	25-8NA5-179	WIRING DIAGRAM- (MOD 253149C) (MOD 25F505A)		RF
B106-DAD	483TCG11J25-3A	.CIRCUIT BREAKER-3AMP (VU0091)		1
CV	422253-15	.BUNG- (VK1793)		1
DA16-P	MTC100YH1-003	.SHELL-PLUG (VK1010) (USED WITH WAFERS: TYPE A, MTC100KT1-1101 TYPE B, MTC100KTI-1102)	091254	1
DA16-P	MTC100YH1-003	.SHELL-PLUG (VK1010) (USED WITH INSERT: MTC100YC1-005)	255276	1
DA16-R	MTC100YH1-004	.SHELL-RECEPTACLE (VK1010) (USED WITH WAFERS: TYPE A, MTC100KT1-1103 TYPE B, MTC100KT1-1104)	091254	1
DA16-R	MTC100YH1-004	.SHELL-RECEPTACLE (VK1010) (USED WITH INSERT: MTC100YC1-006)	255276	1
DA33-P	MTC100YH2-009	.SHELL-PLUG (VK1010) (USED WITH WAFERS: TYPE A, MTC100KT2-1101 TYPE B, MTC100KT2-1102)	091254	1
DA33-P	MTC100YH2-009	.SHELL-PLUG (VK1010) (USED WITH INSERTS: PRIMARY MTC100YC1-001 SECONDARY MTC100YC1-002)	255276	1
DA33-R	MTC100YH2-010	.SHELL-RECEPTACLE (VK1010) (USED WITH WAFERS: TYPE A, MTC100KT2-1103 TYPE B, MTC100KT2-1104)	091254	1
DA33-R	MTC100YH2-010	.SHELL-RECEPTACLE (VK1010) (USED WITH INSERTS: PRIMARY MTC100YC1-003 SECONDARY MTC100YC1-004)	255276	1
NX	3515000-76	.FLOAT SWITCH- (UNIT EXCHANGE ITEM) (VU1918)		1
		MISSING ITEM NO. NOT APPLICABLE		

– ITEM NOT ILLUSTRATED

PRESSURE INDICATION

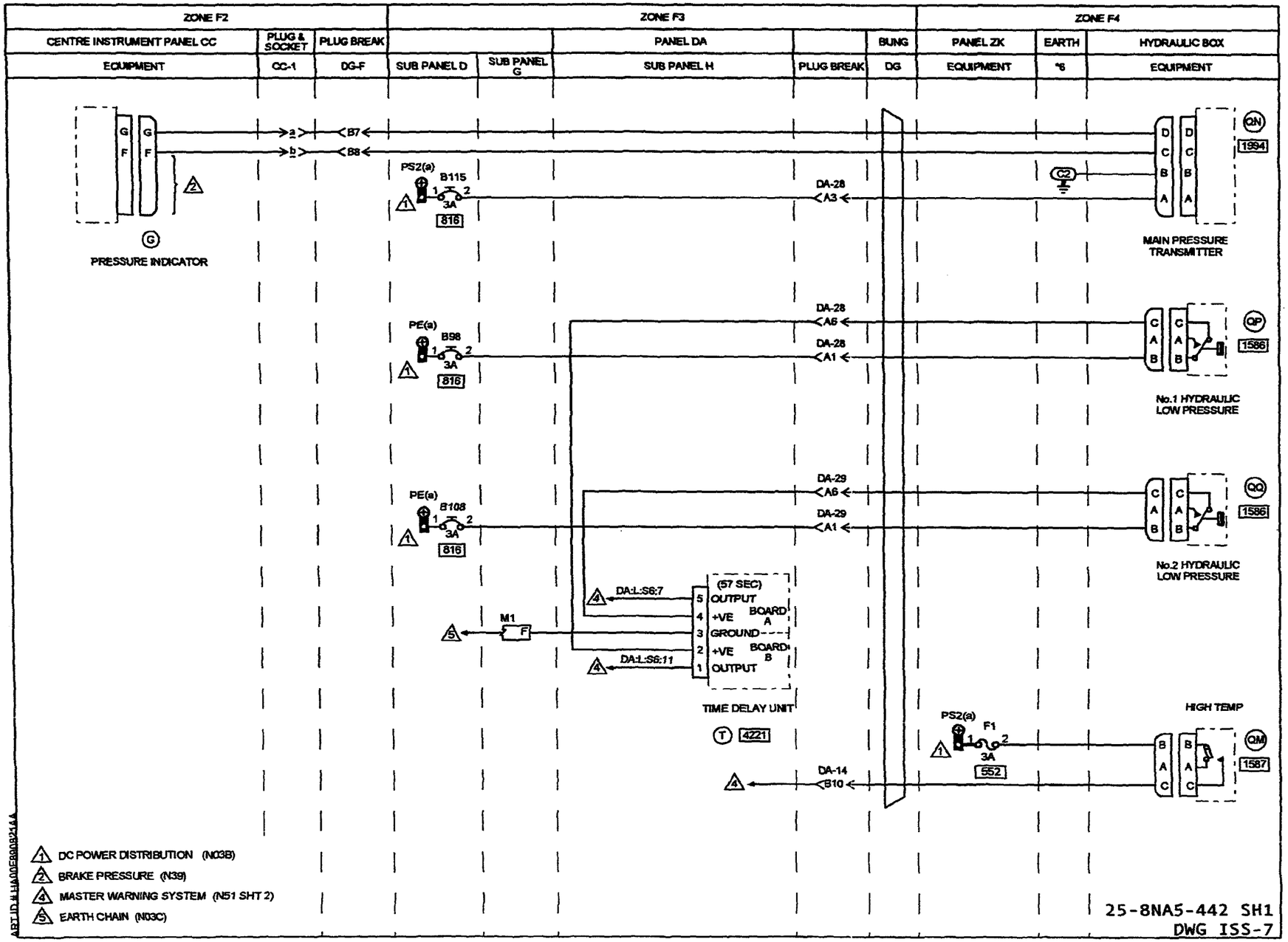
ZONE F2
ZONE F3
ZONE F4
CENTRE INSTRUMENT PANEL CC
PLUG & SOCKET
PLUG BREAK
PANEL DA
BUNG
PANEL ZK
EARTH
HYDRAULIC BOX
EQUIPMENT
CC-1
DG-F
SUB PANEL D
SUB PANEL G
SUB PANEL H
PLUG BREAK
DG
EQUIPMENT
*6
EQUIPMENT
PRESSURE INDICATOR
MAIN PRESSURE TRANSMITTER
No.1 HYDRAULIC LOW PRESSURE
No.2 HYDRAULIC LOW PRESSURE
TIME DELAY UNIT
HIGH TEMP
(57 SEC)
OUTPUT
+VE
GROUND
+VE
OUTPUT
BOARD A
BOARD B
DA:L:S6:7
DA:L:S6:11
DA-28
DA-29
DA-14
PS2(a)
PE(a)
B115
B98
B108
F1
3A
816
552
1994
1586
1587
4221
DC POWER DISTRIBUTION (N03B)
BRAKE PRESSURE (N39)
MASTER WARNING SYSTEM (N51 SHT 2)
EARTH CHAIN (N03C)
25-8NA5-442 SH1
DWG ISS-7

IDENT	PART NUMBER	1234567 NOMENCLATURE	EFFECT FROM TO	UNITS PER ASSY
		HYDRAULIC SYSTEMS PRESSURE INDICATOR	091276	
	25-8NA5-442	WIRING DIAGRAM- (MOD 253149C) (MOD 25F505A)		RF
B108-DAD	483TCG11J25-3A	.CIRCUIT BREAKER-3AMP (VK0142)		1
B115-DAD	483TCG11J25-3A	.CIRCUIT BREAKER-3AMP (VK0142)		1
B98-DAD	483TCG11J25-3A	.CIRCUIT BREAKER-3AMP (VK0142)		1
CC1-P	6026-20-41PN	.CONNECTOR-PIN (VK4161) (OPT 6026-20-41PNCOND1 (VK1100)) (OPT 6026-20-41PN08 (V71468) (OPT (VK0316))) (OPT 6026-20-41PNCONDB (VK1793)) (USED WITH OUTLET: 602GB129-20-1 (VK1100) (OPT GTR62-20NACS1 (VU0419)))		1
CC1-R	BAEREF000003123	.CONNECTOR-SOCKET (6027-20-41SNCONDB (VK1793)) (USED WITH BACKSHELL: GTR62-20NACS1 (VU0419))		1
DA14-P	MTC100YH1-003	.SHELL-PLUG (VK1010) (USED WITH WAFERS: TYPE A, MTC100KT1-1103 TYPE B, MTC100KT1-1104)	091254	1
DA14-P	MTC100YH1-003	.SHELL-PLUG (VK1010) (USED WITH INSERT: MTC100YC1-006)	255276	1
DA14-R	MTC100YH1-004	.SHELL-RECEPTACLE (VK1010) (USED WITH WAFERS: TYPE A, MTC100KT1-1101 TYPE B, MTC100KTI-1102)	091254	1
DA14-R	MTC100YH1-004	.SHELL-RECEPTACLE (VK1010) (USED WITH INSERT: MTC100YC1-005)	255276	1
		MISSING ITEM NO. NOT APPLICABLE		

– ITEM NOT ILLUSTRATED

IDENT	PART NUMBER	1234567 NOMENCLATURE	EFFECT FROM TO	UNITS PER ASSY
DA28-P	MTC100YH1-003	.SHELL-PLUG (VK1010) (USED WITH WAFERS: TYPE A, MTC100KT1-1101 TYPE B, MTC100KTI-1102)	091254	1
DA28-P	MTC100YH1-003	.SHELL-PLUG (VK1010) (USED WITH INSERT: MTC100YC1-005)	255276	1
DA28-R	MTC100YH1-004	.SHELL-RECEPTACLE (VK1010) (USED WITH WAFERS: TYPE A, MTC100KT1-1103 TYPE B, MTC100KT1-1104)	091254	1
DA28-R	MTC100YH1-004	.SHELL-RECEPTACLE (VK1010) (USED WITH INSERT: MTC100YC1-006)	255276	1
DA29-P	MTC100YH1-003	.SHELL-PLUG (VK1010) (USED WITH WAFERS: TYPE A, MTC100KT1-1101 TYPE B, MTC100KTI-1102)	091254	1
DA29-P	MTC100YH1-003	.SHELL-PLUG (VK1010) (USED WITH INSERT: MTC100YC1-005)	255276	1
DA29-R	MTC100YH1-004	.SHELL-RECEPTACLE (VK1010) (USED WITH WAFERS: TYPE A, MTC100KT1-1103 TYPE B, MTC100KT1-1104)	091254	1
DA29-R	MTC100YH1-004	.SHELL-RECEPTACLE (VK1010) (USED WITH INSERT: MTC100YC1-006)	255276	1
DG	422255-8	.BUNG- (VK1793)		1
DGF-P	MTC100YH2-009	.SHELL-PLUG (VK1010) (USED WITH WAFERS: TYPE A, MTC100KT2-1103 TYPE B, MTC100KT2-1104)	091254	1
DGF-P	MTC100YH2-009	.SHELL-PLUG (VK1010) (USED WITH INSERTS: PRIMARY MTC100YC1-003 SECONDARY MTC100YC1-004)	255276	1

MISSING ITEM NO. NOT APPLICABLE

– ITEM NOT ILLUSTRATED

IDENT	PART NUMBER	1234567 NOMENCLATURE	EFFECT FROM TO	UNITS PER ASSY
DGF-R	MTC100YH2-010	.SHELL-RECEPTACLE (VK1010) (USED WITH WAFERS: TYPE A, MTC100KT2-1101 TYPE B, MTC100KT2-1102)	091254	1
DGF-R	MTC100YH2-010	.SHELL-RECEPTACLE (VK1010) (USED WITH INSERTS: PRIMARY MTC100YC1-001 SECONDARY MTC100YC1-002)	255276	1
F1-ZK	5920-99-0120075	.FUSE-3AMP (VK0657)		1
G-CC	696-01-0013	.INDICATOR-COMBINED BRAKE AND MAIN HYDRAULIC PRESSURE (VU1588)		1
G-CC-R	6026-12-10SN	.CONNECTOR-SOCKET (VK4161) (OPT 6026-12-10SNCOND1 (VK1100)) (OPT 6026-12-10SN08 (V71468) (OPT (VK0316))) (OPT 6026-12-10SNCONDB (VK1793)) (USED WITH OUTLET: 602GB129-12-1 (VK1100) (OPT GTR62-12NACS1 (VU0419)))		1
M1-DAG	MRTB20E04-111	.TERMINAL JUNCTION MODULE- (VK0574)		1
QM	150T283	.TEMPERATURE SWITCH- (V09049)		1
QM-R	MC11E8-3S	.CONNECTOR-SOCKET (V71468) (OPT (VK0316))		1
QN	695-4-20	.TRANSDUCER-PRESSURE (VU1588)		1
QN-R	BAEREF000003102	.CONNECTOR-SOCKET (6026-10-6SNCONDB (VK1793)) (USED WITH OUTLET: GTR42-10NACS1 (VU0419))		1
QP	HE15185-4SN1	.PRESSURE SWITCH- (VK2617)		1
QP-R	LPT06F8-33S	.CONNECTOR-SOCKET (VK1793)		1
		MISSING ITEM NO. NOT APPLICABLE		

– ITEM NOT ILLUSTRATED

IDENT	PART NUMBER	1234567 NOMENCLATURE	EFFECT FROM TO	UNITS PER ASSY
QQ	HE15185-4SN1	.PRESSURE SWITCH- (VK2617)		1
QQ-R	LPT06F8-33S	.CONNECTOR-SOCKET (VK1793)		1
T-DAH	25-8NF2619-1A	.TIME DELAY UNIT- (COMPRISING OF: TERMINAL BLOCK HWBUN1736S5B (VK0574))		1
		MISSING ITEM NO. NOT APPLICABLE		

- ITEM NOT ILLUSTRATED

CHAPTER

30

ICE AND RAIN PROTECTION

CHAPTER 30 - ICE AND RAIN PROTECTION

TABLE OF CONTENTS

SUBJECT	CHAPTER SECTION UNIT	FIGURE	EFFECT
AIRFOIL	30-10-00		
TKS AIRFRAME DEICING	30-10-10	11	091276

CHAPTER 30 - ICE AND RAIN PROTECTION

TABLE OF CONTENTS

SUBJECT	CHAPTER SECTION UNIT	FIGURE	EFFECT
AIR INTAKES	30-20-00		
ENGINE AND INTAKE DE-ICE	30-20-10	2	091276

CHAPTER 30 - ICE AND RAIN PROTECTION

TABLE OF CONTENTS

SUBJECT	CHAPTER SECTION UNIT	FIGURE	EFFECT
PITOT AND STATIC	30-30-00		
PITOT HEAD HEATERS	30-30-31	2	091276
STALL VANE SENSOR HEATING	30-30-20	2	091276
STATIC PLATE HEATERS	30-30-10	2	091276

CHAPTER 30 - ICE AND RAIN PROTECTION

TABLE OF CONTENTS

SUBJECT	CHAPTER SECTION UNIT	FIGURE	EFFECT
WINDOWS, WINDSCREEN AND DOORS	30-40-00		
LH AND RH A WINDSCREEN DE-ICING	30-40-15	7	091145
			147147
			149151
LH AND RH A WINDSCREEN DE-ICING	30-40-15	10	152220
LH AND RH A WINDSCREEN DE-ICING	30-40-15	11	221264
LH AND RH A WINDSCREEN DE-ICING	30-40-15	12	146146
			148148
			265276
WINDSCREEN B DE-ICING LH AND RH	30-40-20	3	091220
WINDSCREEN B DE-ICING LH AND RH	30-40-20	5	221276

CHAPTER 30 - ICE AND RAIN PROTECTION

TABLE OF CONTENTS

SUBJECT	CHAPTER SECTION UNIT	FIGURE	EFFECT
DETECTION	30-80-00		
ICE DETECTION	30-80-10	2	091151
ICE DETECTION	30-80-10	3	152276

CH-SECT-UNIT-FIG	PAGE NO.	DATE
*30	1	AUG 31/03
*30	2	AUG 31/03
*30	3	AUG 31/03
*30	4	AUG 31/03
*30	5	AUG 31/03
30-10-00	1	MAY 31/02
30-10-10-11	0	MAY 31/02
30-10-10-11	1	NOV 30/02
30-10-10-11	2	MAY 31/02
30-10-10-11	3	MAY 31/02
30-10-10-11	4	MAY 31/02
30-20-00	1	MAY 31/02
30-20-10- 2	0	NOV 30/02
30-20-10- 2	0A	MAY 31/02
30-20-10- 2	1	MAY 31/02
30-20-10- 2	2	MAY 31/02
30-20-10- 2	3	MAY 31/02
30-20-10- 2	4	MAY 31/02
30-20-10- 2	5	MAY 31/02
30-20-10- 2	6	MAY 31/02
30-20-10- 2	7	MAY 31/02
30-30-00	1	MAY 31/02
30-30-10- 2	0	MAY 31/02
30-30-10- 2	1	MAY 31/02
30-30-10- 2	2	MAY 31/02
30-30-20- 2	0	MAY 31/02
30-30-20- 2	1	MAY 31/02
30-30-20- 2	2	MAY 31/02
30-30-20- 2	3	MAY 31/02
30-30-20- 2	4	MAY 31/02
30-30-20- 2	5	MAY 31/02
30-30-20- 2	6	MAY 31/02
30-30-20- 2	7	MAY 31/02
30-30-31- 2	0	MAY 31/02
30-30-31- 2	1	MAY 31/02
30-30-31- 2	2	MAY 31/02
30-30-31- 2	3	MAY 31/02
30-40-00	1	MAY 31/02
30-40-15- 7	0	MAY 31/02
30-40-15- 7	0A	MAY 31/02
30-40-15- 7	0B	MAY 31/02
30-40-15- 7	0C	MAY 31/02
30-40-15- 7	1	MAY 31/02
30-40-15- 7	2	MAY 31/02
30-40-15- 7	3	MAY 31/02
30-40-15- 7	4	MAY 31/02
30-40-15- 7	5	MAY 31/02
*30-40-15- 7	6	AUG 31/03
*30-40-15- 7	7	AUG 31/03
30-40-15-10	0	NOV 30/02
30-40-15-10	0A	NOV 30/02
30-40-15-10	0B	NOV 30/02
30-40-15-10	0C	MAY 31/02
30-40-15-10	1	MAY 31/02
30-40-15-10	2	MAY 31/02
30-40-15-10	3	MAY 31/02
30-40-15-10	4	MAY 31/02
*30-40-15-10	5	AUG 31/03
*30-40-15-10	6	AUG 31/03
30-40-15-11	0	NOV 30/02
30-40-15-11	0A	MAY 31/02
30-40-15-11	0B	MAY 31/02
30-40-15-11	0C	MAY 31/02
30-40-15-11	1	MAY 31/02
30-40-15-11	2	MAY 31/02
30-40-15-11	3	MAY 31/02
30-40-15-11	4	MAY 31/02
30-40-15-11	5	MAY 31/02
30-40-15-11	6	MAY 31/02
*30-40-15-11	7	AUG 31/03
*30-40-15-11	8	AUG 31/03
30-40-15-12	0	MAY 31/02
30-40-15-12	0A	MAY 31/02
30-40-15-12	0B	NOV 30/02
30-40-15-12	0C	MAY 31/02
30-40-15-12	1	MAY 31/02
30-40-15-12	2	MAY 31/02
30-40-15-12	3	MAY 31/02
30-40-15-12	4	MAY 31/02
30-40-15-12	5	MAY 31/02
30-40-15-12	6	MAY 31/02
*30-40-15-12	7	AUG 31/03
*30-40-15-12	8	AUG 31/03
30-40-20- 3	0	NOV 30/02
30-40-20- 3	1	MAY 31/02
30-40-20- 3	2	MAY 31/02
30-40-20- 3	3	MAY 31/02
*30-40-20- 3	4	AUG 31/03
*30-40-20- 3	5	AUG 31/03
30-40-20- 5	0	NOV 30/02
30-40-20- 5	1	MAY 31/02
30-40-20- 5	2	MAY 31/02
30-40-20- 5	3	MAY 31/02
30-40-20- 5	4	MAY 31/02
*30-40-20- 5	5	AUG 31/03
*30-40-20- 5	6	AUG 31/03
30-80-00	1	MAY 31/02
30-80-10- 2	0	MAY 31/02
30-80-10- 2	1	MAY 31/02
30-80-10- 2	2	MAY 31/02
30-80-10- 3	0	MAY 31/02
30-80-10- 3	1	MAY 31/02

*THE ASTERISK INDICATES PAGES CHANGED OR ADDED BY THE CURRENT REVISION

CH-SECT-UNIT-FIG	PAGE NO.	DATE	CH-SECT-UNIT-FIG	PAGE NO.	DATE
30-80-10- 3	2	MAY 31/02			
30-80-10- 3	3	MAY 31/02			

*THE ASTERISK INDICATES PAGES CHANGED OR ADDED BY THE CURRENT REVISION

AIRFOIL

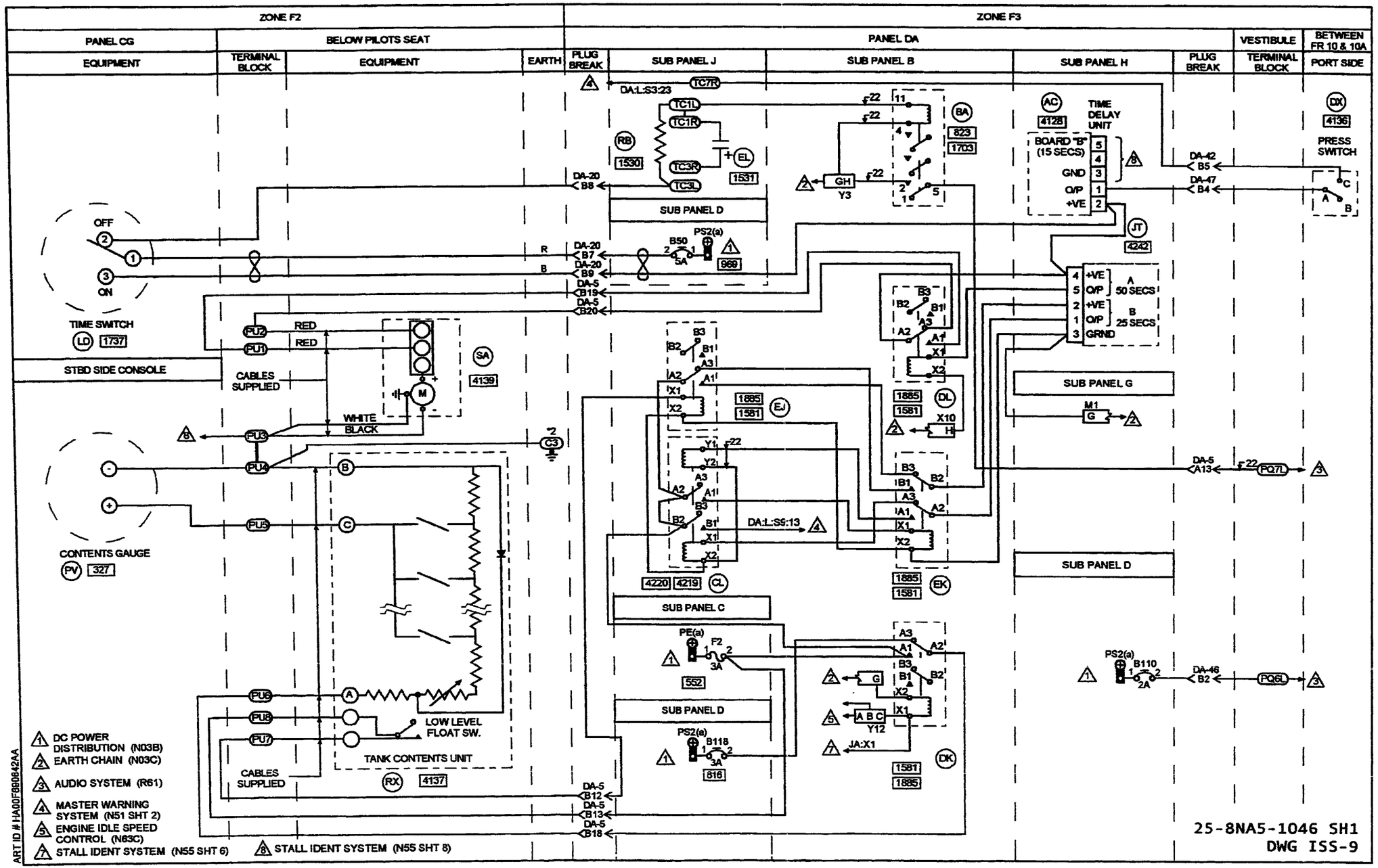
ZONE F2
ZONE F3
PANEL CG
BELOW PILOTS SEAT
PANEL DA
VESTIBULE
BETWEEN FR 10 & 10A
EQUIPMENT
TERMINAL BLOCK
EQUIPMENT
EARTH
PLUG BREAK
SUB PANEL J
SUB PANEL B
SUB PANEL H
PLUG BREAK
TERMINAL BLOCK
PORT SIDE
TIME DELAY UNIT
BOARD "B" (15 SECS)
GND
O/P
+VE
PRESS SWITCH
TIME SWITCH
STBD SIDE CONSOLE
CABLES SUPPLIED
WHITE
BLACK
RED
CONTENTS GAUGE
LOW LEVEL FLOAT SW.
TANK CONTENTS UNIT
SUB PANEL D
SUB PANEL C
SUB PANEL G
1 DC POWER DISTRIBUTION (N03B)
2 EARTH CHAIN (N03C)
3 AUDIO SYSTEM (R61)
4 MASTER WARNING SYSTEM (N51 SHT 2)
5 ENGINE IDLE SPEED CONTROL (N63C)
7 STALL IDENT SYSTEM (N55 SHT 6)
8 STALL IDENT SYSTEM (N55 SHT 8)
ART ID # HA00F880842AA
25-8NA5-1046 SH1
DWG ISS-9

	IDENT	PART NUMBER	1234567 NOMENCLATURE	EFFECT FROM TO	UNITS PER ASSY
			TKS AIRFRAME DEICING	091276	
R		25-8NA5-1046	WIRING DIAGRAM-		RF
R			(MOD 253149C)		
R			(MOD 25F505A)		
R			(PRE MOD 25F968A)		
	AC-DAH	25-8NF977-5A	.TIME DELAY UNIT		1
	BA-DAB	HDD45F2H06	.RELAY-		1
			(VK1793)		
			(USED WITH BASE:		
			418538)		
	B110-DAD	483TCG11J25-2A	.CIRCUIT BREAKER-2AMP		1
			(VU0091)		
	B118-DAD	483TCG11J25-3A	.CIRCUIT BREAKER-3AMP		1
			(VU0091)		
	B50-DAD	483TCG11J25-5A	.CIRCUIT BREAKER-5AMP		1
			(VU0091)		
	CL-DAB	M302D4L	.RELAY-		1
			(VK6265)		
			(USED WITH BASE:		
			S302D1B0)		
	DA20-P	MTC100YH2-009	.SHELL-PLUG	091254	1
			(VK1010)		
			(USED WITH WAFERS:		
			TYPE A, MTC100KT2-1101		
			TYPE B, MTC100KT2-1102)		
	DA20-P	MTC100YH2-009	.SHELL-PLUG	255276	1
			(VK1010)		
			(USED WITH INSERTS:		
			PRIMARY MTC100YC1-001		
			SECONDARY MTC100YC1-002)		
	DA20-R	MTC100YH2-010	.SHELL-RECEPTACLE	091254	1
			(VK1010)		
			(USED WITH WAFERS:		
			TYPE A, MTC100KT2-1103		
			TYPE B, MTC100KT2-1104)		
	DA20-R	MTC100YH2-010	.SHELL-RECEPTACLE	255276	1
			(VK1010)		
			(USED WITH INSERTS:		
			PRIMARY MTC100YC1-003		
			SECONDARY MTC100YC1-004)		
	DA42-P	MTC100YH1-003	.SHELL-PLUG	091254	1
			(VK1010)		
			(USED WITH WAFERS:		
			TYPE A, MTC100KT1-1101		
			TYPE B, MTC100KT1-1102)		
	DA42-P	MTC100YH1-003	.SHELL-PLUG	255276	1
			(VK1010)		
			(USED WITH INSERT:		
			MTC100YC1-005)		
			MISSING ITEM NO. NOT APPLICABLE		

– ITEM NOT ILLUSTRATED

IDENT	PART NUMBER	1234567 NOMENCLATURE	EFFECT FROM TO	UNITS PER ASSY
DA42-R	MTC100YH1-004	.SHELL-RECEPTACLE (VK1010) (USED WITH WAFERS: TYPE A, MTC100KT1-1103 TYPE B, MTC100KT1-1104)	091254	1
DA42-R	MTC100YH1-004	.SHELL-RECEPTACLE (VK1010) (USED WITH INSERT: MTC100YC1-006)	255276	1
DA46-P	MTC100YH1-003	.SHELL-PLUG (VK1010) (USED WITH WAFERS: TYPE A, MTC100KT1-1101 TYPE B, MTC100KT1-1102)	091254	1
DA46-P	MTC100YH1-003	.SHELL-PLUG (VK1010) (USED WITH INSERT: MTC100YC1-005)	255276	1
DA46-R	MTC100YH1-004	.SHELL-RECEPTACLE (VK1010) (USED WITH WAFERS: TYPE A, MTC100KT1-1103 TYPE B, MTC100KT1-1104)	091254	1
DA46-R	MTC100YH1-004	.SHELL-RECEPTACLE (VK1010) (USED WITH INSERT: MTC100YC1-006)	255276	1
DA47-P	MTC100YH1-003	.SHELL-PLUG (VK1010) (USED WITH WAFERS: TYPE A, MTC100KT1-1101 TYPE B, MTC100KT1-1102)	091254	1
DA47-P	MTC100YH1-003	.SHELL-PLUG (VK1010) (USED WITH INSERT: MTC100YC1-005)	255276	1
DA47-R	MTC100YH1-004	.SHELL-RECEPTACLE (VK1010) (USED WITH WAFERS: TYPE A, MTC100KT1-1103 TYPE B, MTC100KT1-1104)	091254	1
DA47-R	MTC100YH1-004	.SHELL-RECEPTACLE (VK1010) (USED WITH INSERT: MTC100YC1-006)	255276	1
DA5-P	MTC100YH2-009	.SHELL-PLUG (VK1010) (USED WITH WAFERS: TYPE A, MTC100KT2-1101 TYPE B, MTC100KT2-1102)	091254	1
		MISSING ITEM NO. NOT APPLICABLE		

– ITEM NOT ILLUSTRATED

IDENT	PART NUMBER	1234567 NOMENCLATURE	EFFECT FROM TO	UNITS PER ASSY
DA5-P	MTC100YH2-009	.SHELL-PLUG (VK1010) (USED WITH INSERTS: PRIMARY MTC100YC1-003 SECONDARY MTC100YC1-004)	255276	1
DA5-R	MTC100YH2-010	.SHELL-RECEPTACLE (VK1010) (USED WITH WAFERS: TYPE A, MTC100KT2-1103 TYPE B, MTC100KT2-1104)	091254	1
DA5-R	MTC100YH2-010	.SHELL-RECEPTACLE (VK1010) (USED WITH INSERTS: PRIMARY MTC100YC1-003 SECONDARY MTC100YC1-004)	255276	1
DK-DAB	M300-1264	.RELAY- (VK6265) (USED WITH BASE: S00A1B0)		1
DL-DAB	M300-1264	.RELAY- (VK6265) (USED WITH BASE: S00A1B0)		1
DX	P067A075-800	.PRESSURE SWITCH- (VK5788)		1
EJ-DAB	M300-1264	.RELAY- (VK6265) (USED WITH BASE: S00A1B0)		1
EK-DAB	M300-1264	.RELAY- (VK6265) (USED WITH BASE: S00A1B0)		1
EL-DAJ	5910-99-0130515	.CAPACITOR-47MF,35V (VK1672)		1
F2-DAC	5920-99-0120075	.FUSE-3AMP (VK0657)		1
JT-DAH	25-8NF2667-1A	.TIME DELAY UNIT		1
LD-CG	25-7NF1565	.TIMER-	091276	1
M1-DAG	MRTB20E04-111	.TERMINAL JUNCTION MODULE- (V14283)		1
PQ	HWBUN1146D10B	.TERMINAL BLOCK- (VK0574)		1
PU	HWBUN1146S10B	.TERMINAL BLOCK- (VK0574)		1
PV-CG	S458-5-191	.CONTENTS GAUGE- (VU1588)		1
RB-DAJ	5905-99-0135777	.RESISTOR-20KOHM,1W (VK0064)		1
		MISSING ITEM NO. NOT APPLICABLE		

– ITEM NOT ILLUSTRATED

IDENT	PART NUMBER	1234567 NOMENCLATURE	EFFECT FROM TO	UNITS PER ASSY
RX	9201000-245	.TRANSMITTER UNIT- (VU1918)		1
SA	25-8NF4805-1A	.PUMP		1
TC-DAJ	HWBUN1736D10B	.TERMINAL BLOCK- (VK0574)		1
X10-DAB	MRTB20E04-111	.TERMINAL JUNCTION MODULE- (V14283)		1
Y12-DAB	MRTB20E57-111	.TERMINAL JUNCTION MODULE- (V14283)		1
Y3-DAB	MRTB20E04-111	.TERMINAL JUNCTION MODULE- (V14283)		1

MISSING ITEM NO. NOT APPLICABLE

– ITEM NOT ILLUSTRATED

AIR INTAKES

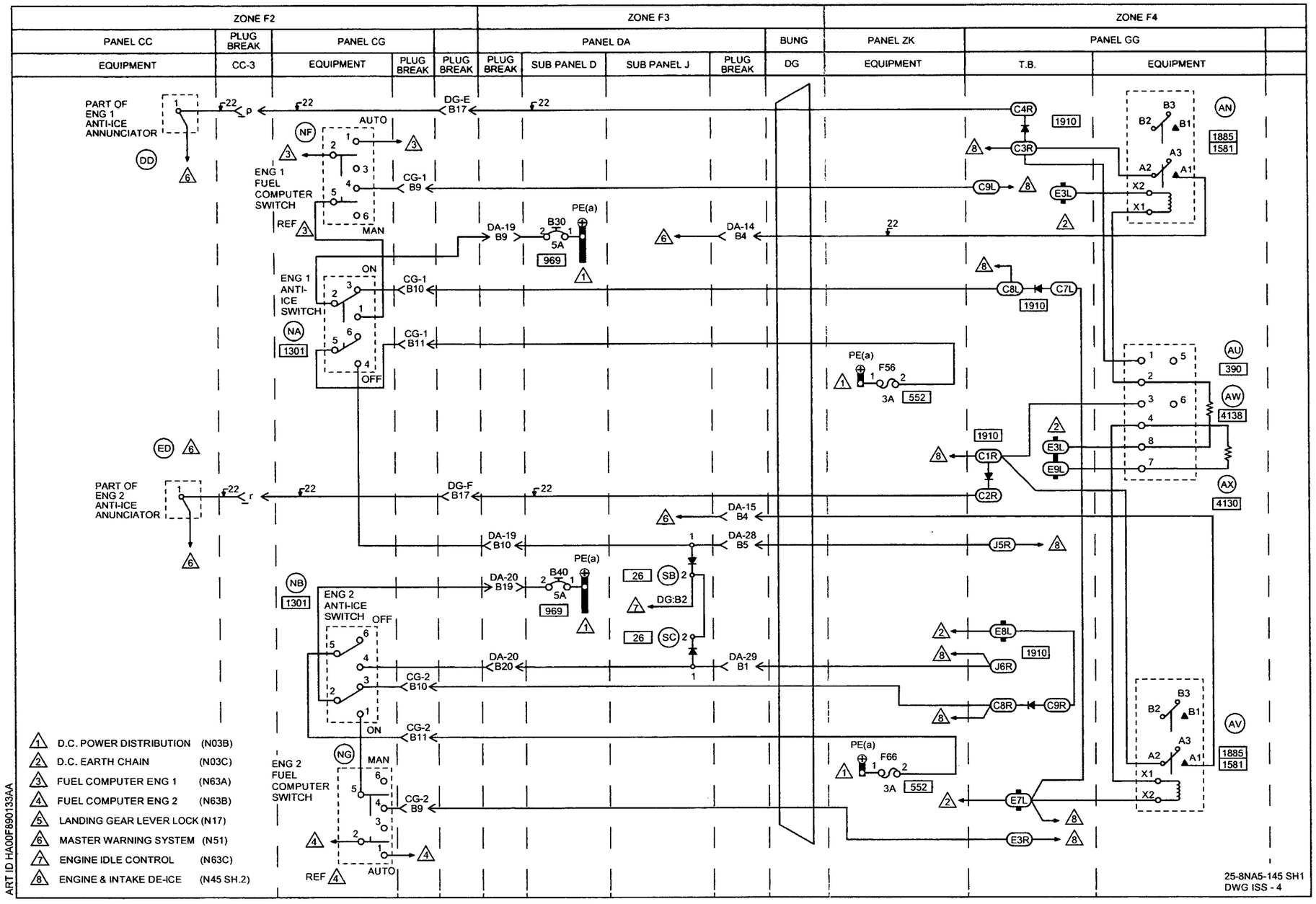
ZONE F2
ZONE F3
ZONE F4
PANEL CC
PLUG BREAK
PANEL CG
PANEL DA
BUNG
PANEL ZK
PANEL GG
EQUIPMENT
CC-3
EQUIPMENT
PLUG BREAK
PLUG BREAK
PLUG BREAK
SUB PANEL D
SUB PANEL J
PLUG BREAK
DG
EQUIPMENT
T.B.
EQUIPMENT
PART OF ENG 1 ANTI-ICE ANNUNCIATOR
DD
NF
AUTO
ENG 1 FUEL COMPUTER SWITCH
REF
MAN
DG-E B17
CG-1 B9
DA-19 B9
B30
5A
969
PE(a)
DA-14 B4
ENG 1 ANTI-ICE SWITCH
ON
OFF
NA
1301
CG-1 B10
CG-1 B11
PE(a)
F56
3A
552
ED
PART OF ENG 2 ANTI-ICE ANUNCIATOR
DG-F B17
DA-15 B4
DA-19 B10
DA-28 B5
NB
1301
ENG 2 ANTI-ICE SWITCH
OFF
DA-20 B19
B40
5A
969
PE(a)
26
SB
DG:B2
26
SC
DA-20 B20
DA-29 B1
CG-2 B10
ON
CG-2 B11
NG
ENG 2 FUEL COMPUTER SWITCH
MAN
CG-2 B9
REF
AUTO
PE(a)
F66
3A
552
C4R
C3R
C9L
E3L
C8L
C7L
1910
C1R
E3L
E9L
C2R
J5R
E8L
J6R
C8R
C9R
E7L
E3R
AN
1885
1581
AU
390
AW
4138
AX
4130
AV
1885
1581
1 D.C. POWER DISTRIBUTION (N03B)
2 D.C. EARTH CHAIN (N03C)
3 FUEL COMPUTER ENG 1 (N63A)
4 FUEL COMPUTER ENG 2 (N63B)
5 LANDING GEAR LEVER LOCK (N17)
6 MASTER WARNING SYSTEM (N51)
7 ENGINE IDLE CONTROL (N63C)
8 ENGINE & INTAKE DE-ICE (N45 SH.2)
ART ID HA00F890133AA
25-8NA5-145 SH1
DWG ISS - 4

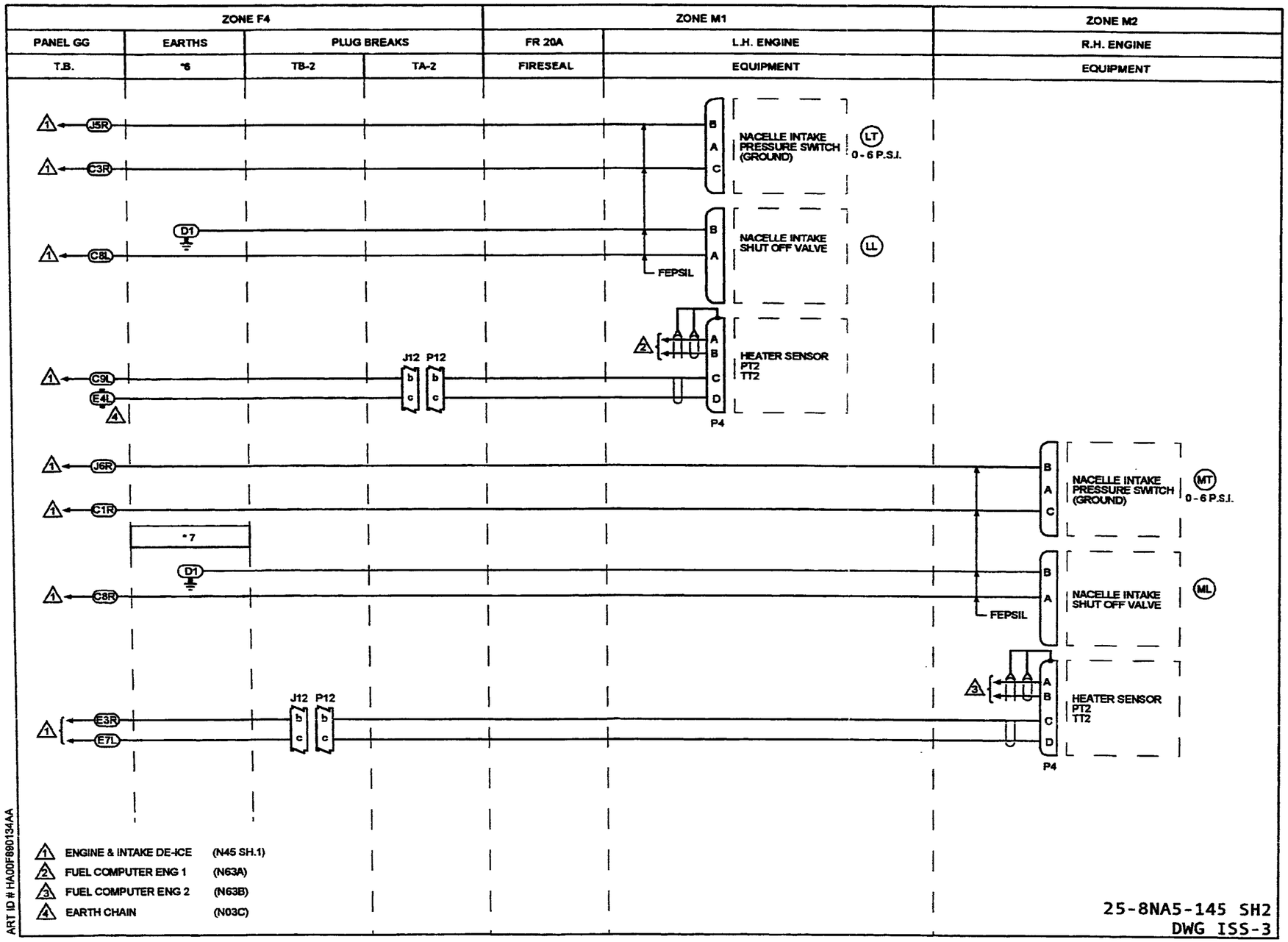
ZONE F4
ZONE M1
ZONE M2
PANEL GG
EARTHS
PLUG BREAKS
FR 20A
L.H. ENGINE
R.H. ENGINE
T.B.
*6
TB-2
TA-2
FIRESEAL
EQUIPMENT
EQUIPMENT
J5R
C3R
C8L
D1
C9L
E4L
J6R
C1R
C8R
E3R
E7L
*7
J12
P12
FEPSIL
NACELLE INTAKE PRESSURE SWITCH (GROUND)
LT
0 - 6 P.S.I.
NACELLE INTAKE SHUT OFF VALVE
LL
HEATER SENSOR PT2 TT2
P4
MT
ML
1 ENGINE & INTAKE DE-ICE (N45 SH.1)
2 FUEL COMPUTER ENG 1 (N63A)
3 FUEL COMPUTER ENG 2 (N63B)
4 EARTH CHAIN (N03C)
ART ID # HA00F890134AA
25-8NA5-145 SH2
DWG ISS-3

IDENT	PART NUMBER	1234567 NOMENCLATURE	EFFECT FROM TO	UNITS PER ASSY
		ENGINE AND INTAKE DE-ICE	091276	
	25-8NA5-145	WIRING DIAGRAM- (MOD 253149C)		RF
AN-GG	M300-1264	.RELAY- (VK6265) (USED WITH SOCKET: M12883-41-16 (V81349))		1
AU-GG	TDA310	.TIME DELAY UNIT- (VU0235)	091109	1
AU-GG	TDA310A	.TIME DELAY UNIT- (VU0235)	110276	1
AV-GG	M300-1264	.RELAY- (VK6265) (USED WITH SOCKET: M12883-41-16 (V81349))		1
AW-GG	S3502-218	.RESISTOR- (VK0064)		1
AX-GG	S3502-218	.RESISTOR- (VK0064)		1
B30-DAD	483TCG11J25-5A	.CIRCUIT BREAKER-5AMP (VU0091)		1
B40-DAD	483TCG11J25-5A	.CIRCUIT BREAKER-5AMP (VU0091)		1
C-GG	HWBUN1146D10B	.TERMINAL BLOCK- (VK0574) (USED WITH DIODE: BYW54 (VK0004))		1
CC3-P	BAEREF000003123	.CONNECTOR-SOCKET (6027-20-41SNCONDB (VK1793)) (USED WITH STRAIN RELIEF: 602GB129-20-1 (VK1100))		1
CC3-R	6026-20-41P	.CONNECTOR-PLUG (VK4161)		1
CG1-P	MTC100YH2-009	.SHELL-PLUG (VK1010) (USED WITH WAFERS: TYPE A, MTC100KT2-1101 TYPE B, MTC100KT2-1102)	091254	1
CG1-P	MTC100YH2-009	.SHELL-PLUG (VK1010) (USED WITH INSERTS: PRIMARY MTC100YC1-001 SECONDARY MTC100YC1-002)	255276	1
		MISSING ITEM NO. NOT APPLICABLE		

– ITEM NOT ILLUSTRATED

IDENT	PART NUMBER	1234567 NOMENCLATURE	EFFECT FROM TO	UNITS PER ASSY
CG1-R	MTC100YH2-010	.SHELL-RECEPTACLE (VK1010) (USED WITH WAFERS: TYPE A, MTC100KT2-1103 TYPE B, MTC100KT2-1104)	091254	1
CG1-R	MTC100YH2-010	.SHELL-RECEPTACLE (VK1010) (USED WITH INSERTS: PRIMARY MTC100YC1-003 SECONDARY MTC100YC1-004)	255276	1
CG2-P	MTC100YH2-009	.SHELL-PLUG (VK1010) (USED WITH WAFERS: TYPE A, MTC100KT2-1101 TYPE B, MTC100KT2-1102)	091254	1
CG2-P	MTC100YH2-009	.SHELL-PLUG (VK1010) (USED WITH INSERTS: PRIMARY MTC100YC1-001 SECONDARY MTC100YC1-002)	255276	1
CG2-R	MTC100YH2-010	.SHELL-RECEPTACLE (VK1010) (USED WITH WAFERS: TYPE A, MTC100KT2-1103 TYPE B, MTC100KT2-1104)	091254	1
CG2-R	MTC100YH2-010	.SHELL-RECEPTACLE (VK1010) (USED WITH INSERTS: PRIMARY MTC100YC1-003 SECONDARY MTC100YC1-004)	255276	1
DA14-P	MTC100YH1-003	.SHELL-PLUG (VK1010) (USED WITH WAFERS: TYPE A, MTC100KT1-1101 TYPE B, MTC100KT1-1102)	091254	1
DA14-P	MTC100YH1-003	.SHELL-PLUG (VK1010) (USED WITH INSERT: MTC100YC1-005)	255276	1
DA14-R	MTC100YH1-004	.SHELL-RECEPTACLE (VK1010) (USED WITH WAFERS: TYPE A, MTC100KT1-1103 TYPE B, MTC100KT1-1104)	091254	1
DA14-R	MTC100YH1-004	.SHELL-RECEPTACLE (VK1010) (USED WITH INSERT: MTC100YC1-006)	255276	1
		MISSING ITEM NO. NOT APPLICABLE		

– ITEM NOT ILLUSTRATED

IDENT	PART NUMBER	1234567 NOMENCLATURE	EFFECT FROM TO	UNITS PER ASSY
DA15-P	MTC100YH1-003	.SHELL-PLUG (VK1010) (USED WITH WAFERS: TYPE A, MTC100KT1-1101 TYPE B, MTC100KT1-1102)	091254	1
DA15-P	MTC100YH1-003	.SHELL-PLUG (VK1010) (USED WITH INSERT: MTC100YC1-005)	255276	1
DA15-R	MTC100YH1-004	.SHELL-RECEPTACLE (VK1010) (USED WITH WAFERS: TYPE A, MTC100KT1-1103 TYPE B, MTC100KT1-1104)	091254	1
DA15-R	MTC100YH1-004	.SHELL-RECEPTACLE (VK1010) (USED WITH INSERT: MTC100YC1-006)	255276	1
DA19-P	MTC100YH2-009	.SHELL-PLUG (VK1010) (USED WITH WAFERS: TYPE A, MTC100KT2-1101 TYPE B, MTC100KT2-1102)	091254	1
DA19-P	MTC100YH2-009	.SHELL-PLUG (VK1010) (USED WITH INSERTS: PRIMARY MTC100YC1-001 SECONDARY MTC100YC1-002)	255276	1
DA19-R	MTC100YH2-010	.SHELL-RECEPTACLE (VK1010) (USED WITH WAFERS: TYPE A, MTC100KT2-1103 TYPE B, MTC100KT2-1104)	091254	1
DA19-R	MTC100YH2-010	.SHELL-RECEPTACLE (VK1010) (USED WITH INSERTS: PRIMARY MTC100YC1-003 SECONDARY MTC100YC1-004)	255276	1
DA20-P	MTC100YH2-009	.SHELL-PLUG (VK1010) (USED WITH WAFERS: TYPE A, MTC100KT2-1101 TYPE B, MTC100KT2-1102)	091254	1
DA20-P	MTC100YH2-009	.SHELL-PLUG (VK1010) (USED WITH INSERTS: PRIMARY MTC100YC1-001 SECONDARY MTC100YC1-002)	255276	1
		MISSING ITEM NO. NOT APPLICABLE		

– ITEM NOT ILLUSTRATED

IDENT	PART NUMBER	1234567 NOMENCLATURE	EFFECT FROM TO	UNITS PER ASSY
DA20-R	MTC100YH2-010	.SHELL-RECEPTACLE (VK1010) (USED WITH WAFERS: TYPE A, MTC100KT2-1103 TYPE B, MTC100KT2-1104)	091254	1
DA20-R	MTC100YH2-010	.SHELL-RECEPTACLE (VK1010) (USED WITH INSERTS: PRIMARY MTC100YC1-003 SECONDARY MTC100YC1-004)	255276	1
DA28-P	MTC100YH1-003	.SHELL-PLUG (VK1010) (USED WITH WAFERS: TYPE A, MTC100KT1-1101 TYPE B, MTC100KT1-1102)	091254	1
DA28-P	MTC100YH1-003	.SHELL-PLUG (VK1010) (USED WITH INSERT: MTC100YC1-005)	255276	1
DA28-R	MTC100YH1-004	.SHELL-RECEPTACLE (VK1010) (USED WITH WAFERS: TYPE A, MTC100KT1-1103 TYPE B, MTC100KT1-1104)	091254	1
DA28-R	MTC100YH1-004	.SHELL-RECEPTACLE (VK1010) (USED WITH INSERT: MTC100YC1-006)	255276	1
DA29-P	MTC100YH1-003	.SHELL-PLUG (VK1010) (USED WITH WAFERS: TYPE A, MTC100KT1-1101 TYPE B, MTC100KT1-1102)	091254	1
DA29-P	MTC100YH1-003	.SHELL-PLUG (VK1010) (USED WITH INSERT: MTC100YC1-005)	255276	1
DA29-R	MTC100YH1-004	.SHELL-RECEPTACLE (VK1010) (USED WITH WAFERS: TYPE A, MTC100KT1-1103 TYPE B, MTC100KT1-1104)	091254	1
DA29-R	MTC100YH1-004	.SHELL-RECEPTACLE (VK1010) (USED WITH INSERT: MTC100YC1-006)	255276	1
DD-CC	C9032-001A	.LAMP MODULE- (VK0673)	091095 097097	1
DD-CC	C9032-001B	.LAMP MODULE- (VK0673)	096096 098276	1
		MISSING ITEM NO. NOT APPLICABLE		

– ITEM NOT ILLUSTRATED

IDENT	PART NUMBER	1234567 NOMENCLATURE	EFFECT FROM TO	UNITS PER ASSY
DG	422255-8	.BUNG- (VK1793)		1
DGE-P	MTC100YH2-009	.SHELL-PLUG (VK1010) (USED WITH WAFERS: TYPE A, MTC100KT2-1103 TYPE B, MTC100KT2-1104)	091254	1
DGE-P	MTC100YH2-009	.SHELL-PLUG (VK1010) (USED WITH INSERTS: PRIMARY MTC100YC1-003 SECONDARY MTC100YC1-004)	255276	1
DGE-R	MTC100YH2-010	.SHELL-RECEPTACLE (VK1010) (USED WITH WAFERS: TYPE A, MTC100KT2-1101 TYPE B, MTC100KT2-1102)	091254	1
DGE-R	MTC100YH2-010	.SHELL-RECEPTACLE (VK1010) (USED WITH INSERTS: PRIMARY MTC100YC1-001 SECONDARY MTC100YC1-002)	255276	1
DGF-P	MTC100YH2-009	.SHELL-PLUG (VK1010) (USED WITH WAFERS: TYPE A, MTC100KT2-1103 TYPE B, MTC100KT2-1104)	091254	1
DGF-P	MTC100YH2-009	.SHELL-PLUG (VK1010) (USED WITH INSERTS: PRIMARY MTC100YC1-003 SECONDARY MTC100YC1-004)	255276	1
DGF-R	MTC100YH2-010	.SHELL-RECEPTACLE (VK1010) (USED WITH WAFERS: TYPE A, MTC100KT2-1101 TYPE B, MTC100KT2-1102)	091254	1
DGF-R	MTC100YH2-010	.SHELL-RECEPTACLE (VK1010) (USED WITH INSERTS: PRIMARY MTC100YC1-001 SECONDARY MTC100YC1-002)	255276	1
E-GG	HWBUN1146D10B	.TERMINAL BLOCK- (VK0574)		1
ED-CC	C9032-001A	.LAMP MODULE- (VK0673)	091095 097097	1
ED-CC	C9032-001B	.LAMP MODULE- (VK0673)	096096 098276	1
F56-ZK	5920-99-0120075	.FUSE-3AMP (VK0657)		1
		MISSING ITEM NO. NOT APPLICABLE		

– ITEM NOT ILLUSTRATED

IDENT	PART NUMBER	1234567 NOMENCLATURE	EFFECT FROM TO	UNITS PER ASSY
F66-ZK	5920-99-0120075	.FUSE-3AMP (VK0657)		1
J-GG	HWBUN1146D10B	.TERMINAL BLOCK- (VK0574)		1
J12-TA2	25-8NF2755A	.HARNESS-NO 1 ENGINE SYNC (VK0400)		1
J12-TB2	25-8NF2757A	.CONNECTOR-HARNESS (V7X000)		1
LL	F10A5SCP102-5	.SHUT OFF VALVE- NACELLE INTAKE (V26512) (USED WITH CONNECTOR: PTY06CE8-3SSR (V71468))		1
LT	HTE690013	.PRESSURE SWITCH- NACELLE INTAKE(GROUND) (VK2617) (USED WITH: CONNECTOR MS3456L10SL3S CLAMP MS3152R10 (V71468) (OPT (VK0316)))		1
ML	F10A5SCP102-5	.SHUT OFF VALVE- NACELLE INTAKE (V26512) (USED WITH CONNECTOR: PTY06CE8-3SSR (V71468))		1
MT	HTE690013	.PRESSURE SWITCH- NACELLE INTAKE(GROUND) (VK2617) (USED WITH: CONNECTOR MS3456L10SL3S CLAMP MS3152R10 (V71468) (OPT (VK0316)))		1
NA-CG	2TP1-3	.SWITCH- (V91929) (OPT (VK6596))	091116	1
NA-CG	2TP1-3M	.SWITCH- (V91929) (OPT (VK6596))	117276	1
NB-CG	2TP1-3	.SWITCH- (V91929) (OPT (VK6596))	091116	1
NB-CG	2TP1-3M	.SWITCH- (V91929) (OPT (VK6596))	117276	1
		MISSING ITEM NO. NOT APPLICABLE		

– ITEM NOT ILLUSTRATED

IDENT	PART NUMBER	1234567 NOMENCLATURE	EFFECT FROM TO	UNITS PER ASSY
NF-CG	2TP1-1	.SWITCH- (V91929) (OPT (VK6596))	091116	1
NF-CG	2TP1-1M	.SWITCH- (V91929) (OPT (VK6596))	117276	1
NG-CG	2TP1-1	.SWITCH- (V91929) (OPT (VK6596))	091116	1
NG-CG	2TP1-1M	.SWITCH- (V91929) (OPT (VK6596))	117276	1
P12-TA2	D38999-26KG41PN	.CONNECTOR-P12 (V7X000)		1
P12-TB2	D38999-26KG41PN	.CONNECTOR- (V7X000)		1
P4-LHE	223-662-9301	CONNECTOR-P4 (V7X000)		1
P4-LHE	3074216-1	CONNECTOR-P4 (V7X000)		1
P4-RHE	223-662-9301	.CONNECTOR-P4 (V7X000) (PRE SPB TFE0158)		1
P4-RHE	3074216-1	.CONNECTOR-P4 (V7X000) (POST SPB TFE0158)		1
SB-DAJ	CV7313	.DIODE- (VK0004)		1
SC-DAJ	CV7313	.DIODE- (VK0004)		1

MISSING ITEM NO. NOT APPLICABLE

– ITEM NOT ILLUSTRATED

PITOT AND STATIC

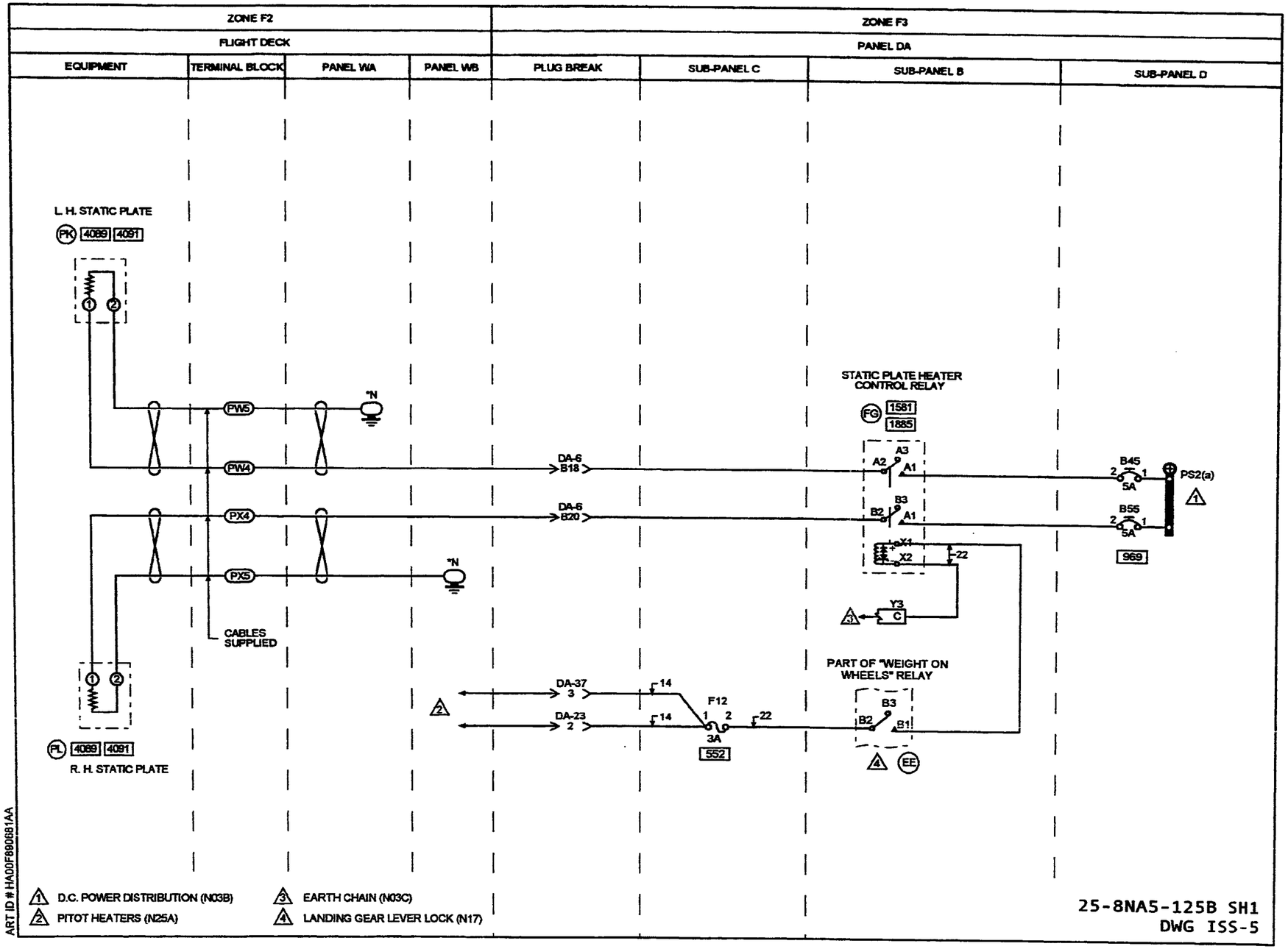
ZONE F2
ZONE F3
FLIGHT DECK
PANEL DA
EQUIPMENT
TERMINAL BLOCK
PANEL WA
PANEL WB
PLUG BREAK
SUB-PANEL C
SUB-PANEL B
SUB-PANEL D
L. H. STATIC PLATE
PK 4089 4091
PW5
PW4
PX4
PX5
*N
DA-6 B18
DA-6 B20
STATIC PLATE HEATER CONTROL RELAY
FG 1581 1885
A3 A2 A1
B3 B2 A1
X1 X2
22
B45 5A
B55 5A
PS2(a)
969
Y3 C
CABLES SUPPLIED
PART OF "WEIGHT ON WHEELS" RELAY
B3 B2 B1
DA-37 3
DA-23 2
14
F12 3A
552
EE
PL 4089 4091
R. H. STATIC PLATE
ART ID # HA00F890681AA
1 D.C. POWER DISTRIBUTION (N03B)
2 PITOT HEATERS (N25A)
3 EARTH CHAIN (N03C)
4 LANDING GEAR LEVER LOCK (N17)
25-8NA5-125B SH1
DWG ISS-5

IDENT	PART NUMBER	1234567 NOMENCLATURE	EFFECT FROM TO	UNITS PER ASSY
		STATIC PLATE HEATERS	091276	
	25-8NA5-125B	WIRING DIAGRAM-		RF
		(MOD 253149C)		
		(MOD 25F505A)		
		(PRE MOD 25F977A)		
B45-DAD	483TCG11J25-5A	.CIRCUIT BREAKER-5AMP		1
		(VU0091)		
B55-DAD	483TCG11J25-5A	.CIRCUIT BREAKER-5AMP		1
		(VU0091)		
DA23-P	MTCR161-04P	.CONNECTOR-PIN		1
		(VK1010)		
DA23-R	MTCR101-04S	.CONNECTOR-SOCKET		1
		(VK1010)		
DA37-P	MTCR161-04P	.CONNECTOR-PIN		1
		(VK1010)		
DA37-R	MTCR101-04S	.CONNECTOR-SOCKET		1
		(VK1010)		
DA6-P	MTC100YH2-009	.SHELL-PLUG	091254	1
		(VK1010)		
		(USED WITH WAFERS:		
		TYPE A, MTC100KT2-1101		
		TYPE B, MTC100KT2-1102)		
DA6-P	MTC100YH2-009	.SHELL-PLUG	255276	1
		(VK1010)		
		(USED WITH INSERTS:		
		PRIMARY MTC100YC1-001		
		SECONDARY MTC100YC1-002)		
DA6-R	MTC100YH2-010	.SHELL-RECEPTACLE	091254	1
		(VK1010)		
		(USED WITH WAFERS;		
		TYPE A, MTC100KT2-1103		
		TYPE B, MTC100KT2-1104)		
DA6-R	MTC100YH2-010	.SHELL-RECEPTACLE	255276	1
		(VK1010)		
		(USED WITH INSERTS:		
		PRIMARY MTC100YC1-003		
		SECONDARY MTC100YC1-004)		
EE-DAB	M300-1264	.RELAY-		1
		(VK6265)		
		(USED WITH SOCKET:		
		M12883-41-16		
		(V81349))		
FG-DAB	M300-1264	.RELAY-		1
		(VK6265)		
		(USED WITH SOCKET:		
		M12883-41-16		
		(V81349))		
F12-DAC	5920-99-0120075	.FUSE-3AMP		1
		(VK0657)		
		MISSING ITEM NO. NOT APPLICABLE		

- ITEM NOT ILLUSTRATED

IDENT	PART NUMBER	1234567 NOMENCLATURE	EFFECT FROM TO	UNITS PER ASSY
PK	E42024-1	.STATIC PLATE-LH (VK5459)		1
PL	E42024-2	.STATIC PLATE-RH (VK5459)		1
PW	HWBUN1146S5B	.TERMINAL BLOCK- (VK0574)		1
PX	HWBUN1146S5B	.TERMINAL BLOCK- (VK0574)		1
Y3-DAB	MRTB20E04-111	.TERMINAL JUNCTION MODULE- (V14283)		1
		MISSING ITEM NO. NOT APPLICABLE		

- ITEM NOT ILLUSTRATED

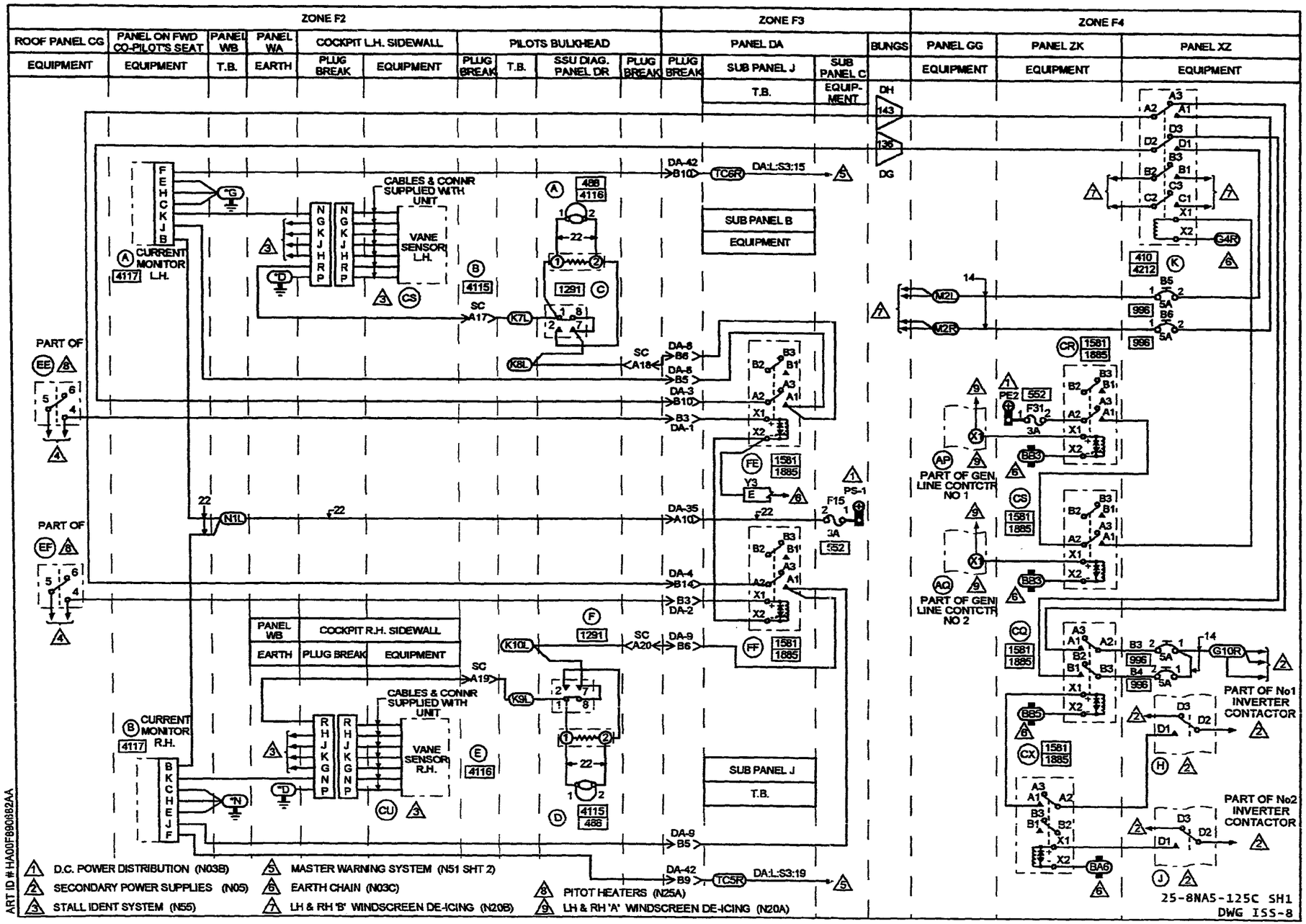
ZONE F2
ZONE F3
ZONE F4
ROOF PANEL CG
PANEL ON FWD CO-PILOT'S SEAT
PANEL WB
PANEL WA
COCKPIT L.H. SIDEWALL
PILOTS BULKHEAD
PANEL DA
BUNGS
PANEL GG
PANEL ZK
PANEL XZ
EQUIPMENT
T.B.
EARTH
PLUG BREAK
SSU DIAG. PANEL DR
SUB PANEL J
SUB PANEL C
SUB PANEL B
CABLES & CONNR SUPPLIED WITH UNIT
VANE SENSOR L.H.
VANE SENSOR R.H.
CURRENT MONITOR L.H.
CURRENT MONITOR R.H.
PART OF GEN LINE CONTCTR NO 1
PART OF GEN LINE CONTCTR NO 2
PART OF No1 INVERTER CONTACTOR
PART OF No2 INVERTER CONTACTOR
D.C. POWER DISTRIBUTION (N03B)
SECONDARY POWER SUPPLIES (N05)
STALL IDENT SYSTEM (N55)
MASTER WARNING SYSTEM (N51 SHT 2)
EARTH CHAIN (N03C)
LH & RH 'B' WINDSCREEN DE-ICING (N20B)
PITOT HEATERS (N25A)
LH & RH 'A' WINDSCREEN DE-ICING (N20A)
25-8NA5-125C SH1
DWG ISS-8
ART ID # HA00F890862AA

IDENT	PART NUMBER	1234567 NOMENCLATURE	EFFECT FROM TO	UNITS PER ASSY
		STALL VANE SENSOR HEATING	091276	
	25-8NA5-125C	WIRING DIAGRAM- (MODIFIED BY SB24-286-253272A) (MODIFIED BY SB24-285-253273A) (MOD 253149C) (MOD 25F505A)		1
A-CN	E37040S	.MONITOR-CURRENT,LH (VK5459)		1
A-CN-R	MS3476L14-12SN	.CONNECTOR-SOCKET (V96906) (USED WITH OUTLET: GTR62-14MACS1 (VU0419))		1
A-DR	80-10-1351	.LAMPHOLDER- (VK0690)		1
AP-GG	HA5N	.CONTACTOR- (VK6265)		1
AQ-GG	HA5N	.CONTACTOR- (VK6265)		1
B-CN	E37040S	.MONITOR-CURRENT,RH (VK5459)		1
B-CN-R	MS3476L14-12SN	.CONNECTOR-SOCKET (V96906) (USED WITH OUTLET: GTR62-14MACS1 (VU0419))		1
B-DR	HSA50-68R	.RESISTOR-68OHM (VK3753)		1
BA-ZK	HWBUN1146S10B	.TERMINAL BLOCK- (VK0574)		1
BB-ZK	HWBUN1146S10B	.TERMINAL BLOCK- (VK0574)		1
B3-XZ	483TCG11J25-5A	.CIRCUIT BREAKER-5AMP (VU0091)		1
B4-XZ	483TCG11J25-5A	.CIRCUIT BREAKER-5AMP (VU0091)		1
B5-XZ	483TCG11J25-5A	.CIRCUIT BREAKER-5AMP (VU0091)		1
B6-XZ	483TCG11J25-5A	.CIRCUIT BREAKER-5AMP (VU0091)		1
C-DR	WC1503	.SWITCH- (VK0653)		1
CQ-ZK	M300-1264	.RELAY- (VK6265) (USED WITH SOCKET: M12883-41-16 (V81349))		1
		MISSING ITEM NO. NOT APPLICABLE		

– ITEM NOT ILLUSTRATED

IDENT	PART NUMBER	1234567 NOMENCLATURE	EFFECT FROM TO	UNITS PER ASSY
CR-ZK	M300-1264	.RELAY- (VK6265) (USED WITH SOCKET: M12883-41-16 (V81349))		1
CS	1703-12	.SENSOR- (V83326)	091276	1
CS-R	MS3470L14-19SN	.CONNECTOR-SOCKET (V96906) (USED WITH OUTLET: GTR62-14MACS1 (VU0419))		1
CS-ZK	M300-1264	.RELAY- (VK6265) (USED WITH SOCKET: M12883-41-16 (V81349))		1
CU	1703-12	.SENSOR- (V83326)	091276	1
CU-R	MS3470L14-19SN	.CONNECTOR-SOCKET (V96906) (USED WITH OUTLET: GTR62-14MACS1 (VU0419))		1
CX-ZK	M300-1264	.RELAY- (VK6265) (USED WITH SOCKET: M12883-41-16 (V81349))		1
D-DR	80-10-1351	.LAMPHOLDER- (VK0690)		1
DA1-P	MTC100YH1-003	.SHELL-PLUG (VK1010) (USED WITH WAFERS: TYPE A, MTC100KT1-1101 TYPE B, MTC100KTI-1102)	091254	1
DA1-P	MTC100YH1-003	.SHELL-PLUG (VK1010) (USED WITH INSERT: MTC100YC1-005)	255276	1
DA1-R	MTC100YH1-004	.SHELL-RECEPTACLE (VK1010) (USED WITH WAFERS: TYPE A, MTC100KT1-1103 TYPE B, MTC100KT1-1104)	091254	1
DA1-R	MTC100YH1-004	.SHELL-RECEPTACLE (VK1010) (USED WITH INSERT: MTC100YC1-006)	255276	1
		MISSING ITEM NO. NOT APPLICABLE		

– ITEM NOT ILLUSTRATED

IDENT	PART NUMBER	1234567 NOMENCLATURE	EFFECT FROM TO	UNITS PER ASSY
DA2-P	MTC100YH1-003	.SHELL-PLUG (VK1010) (USED WITH WAFERS: TYPE A, MTC100KT1-1101 TYPE B, MTC100KTI-1102)	091254	1
DA2-P	MTC100YH1-003	.SHELL-PLUG (VK1010) (USED WITH INSERT: MTC100YC1-005)	255276	1
DA2-R	MTC100YH1-004	.SHELL-RECEPTACLE (VK1010) (USED WITH WAFERS: TYPE A, MTC100KT1-1103 TYPE B, MTC100KT1-1104)	091254	1
DA2-R	MTC100YH1-004	.SHELL-RECEPTACLE (VK1010) (USED WITH INSERT: MTC100YC1-006)	255276	1
DA3-P	MTC100YH1-003	.SHELL-PLUG (VK1010) (USED WITH WAFERS: TYPE A, MTC100KT1-1101 TYPE B, MTC100KTI-1102)	091254	1
DA3-P	MTC100YH1-003	.SHELL-PLUG (VK1010) (USED WITH INSERT: MTC100YC1-005)	255276	1
DA3-R	MTC100YH1-004	.SHELL-RECEPTACLE (VK1010) (USED WITH WAFERS: TYPE A, MTC100KT1-1103 TYPE B, MTC100KT1-1104)	091254	1
DA3-R	MTC100YH1-004	.SHELL-RECEPTACLE (VK1010) (USED WITH INSERT: MTC100YC1-006)	255276	1
DA35-P	MTC100YH2-009	.SHELL-PLUG (VK1010) (USED WITH WAFERS: TYPE A, MTC100KT2-1101 TYPE B, MTC100KT2-1102)	091254	1
DA35-P	MTC100YH2-009	.SHELL-PLUG (VK1010) (USED WITH INSERTS: PRIMARY MTC100YC1-001 SECONDARY MTC100YC1-002)	255276	1
		MISSING ITEM NO. NOT APPLICABLE		

– ITEM NOT ILLUSTRATED

IDENT	PART NUMBER	1234567 NOMENCLATURE	EFFECT FROM TO	UNITS PER ASSY
DA35-R	MTC100YH2-010	.SHELL-RECEPTACLE (VK1010) (USED WITH WAFERS: TYPE A, MTC100KT2-1103 TYPE B, MTC100KT2-1104)	091254	1
DA35-R	MTC100YH2-010	.SHELL-RECEPTACLE (VK1010) (USED WITH INSERTS: PRIMARY MTC100YC1-003 SECONDARY MTC100YC1-004)	255276	1
DA4-P	MTC100YH2-009	.SHELL-PLUG (VK1010) (USED WITH WAFERS: TYPE A, MTC100KT2-1101 TYPE B, MTC100KT2-1102)	091254	1
DA4-P	MTC100YH2-009	.SHELL-PLUG (VK1010) (USED WITH INSERTS: PRIMARY MTC100YC1-001 SECONDARY MTC100YC1-002)	255276	1
DA4-R	MTC100YH2-010	.SHELL-RECEPTACLE (VK1010) (USED WITH WAFERS: TYPE A, MTC100KT2-1103 TYPE B, MTC100KT2-1104)	091254	1
DA4-R	MTC100YH2-010	.SHELL-RECEPTACLE (VK1010) (USED WITH INSERTS: PRIMARY MTC100YC1-003 SECONDARY MTC100YC1-004)	255276	1
DA42-P	MTC100YH1-003	.SHELL-PLUG (VK1010) (USED WITH WAFERS: TYPE A, MTC100KT1-1101 TYPE B, MTC100KTI-1102)	091254	1
DA42-P	MTC100YH1-003	.SHELL-PLUG (VK1010) (USED WITH INSERT: MTC100YC1-005)	255276	1
DA42-R	MTC100YH1-004	.SHELL-RECEPTACLE (VK1010) (USED WITH WAFERS: TYPE A, MTC100KT1-1103 TYPE B, MTC100KT1-1104)	091254	1
DA42-R	MTC100YH1-004	.SHELL-RECEPTACLE (VK1010) (USED WITH INSERT: MTC100YC1-006)	255276	1
		MISSING ITEM NO. NOT APPLICABLE		

– ITEM NOT ILLUSTRATED

IDENT	PART NUMBER	1234567 NOMENCLATURE	EFFECT FROM TO	UNITS PER ASSY
DA8-P	MTC100YH1-003	.SHELL-PLUG (VK1010) (USED WITH WAFERS: TYPE A, MTC100KT1-1101 TYPE B, MTC100KTI-1102)	091254	1
DA8-P	MTC100YH1-003	.SHELL-PLUG (VK1010) (USED WITH INSERT: MTC100YC1-005)	255276	1
DA8-R	MTC100YH1-004	.SHELL-RECEPTACLE (VK1010) (USED WITH WAFERS: TYPE A, MTC100KT1-1103 TYPE B, MTC100KT1-1104)	091254	1
DA8-R	MTC100YH1-004	.SHELL-RECEPTACLE (VK1010) (USED WITH INSERT: MTC100YC1-006)	255276	1
DA9-P	MTC100YH1-003	.SHELL-PLUG (VK1010) (USED WITH WAFERS: TYPE A, MTC100KT1-1101 TYPE B, MTC100KTI-1102)	091254	1
DA9-P	MTC100YH1-003	.SHELL-PLUG (VK1010) (USED WITH INSERT: MTC100YC1-005)	255276	1
DA9-R	MTC100YH1-004	.SHELL-RECEPTACLE (VK1010) (USED WITH WAFERS: TYPE A, MTC100KT1-1103 TYPE B, MTC100KT1-1104)	091254	1
DA9-R	MTC100YH1-004	.SHELL-RECEPTACLE (VK1010) (USED WITH INSERT: MTC100YC1-006)	255276	1
DG	422255-8	.BUNG- (VK1793)		1
DH	422254-9	.BUNG- (VK1793)		1
E-DR	HSA50-68R	.RESISTOR-68OHM (VK3753)		1
EE-CG	2TP1-3	.SWITCH- (V91929) (OPT (VK6596))	091116	1
EE-CG	2TP1-3M	.SWITCH- (V91929) (OPT (VK6596))	117276	1
		MISSING ITEM NO. NOT APPLICABLE		

– ITEM NOT ILLUSTRATED

IDENT	PART NUMBER	1234567 NOMENCLATURE	EFFECT FROM TO	UNITS PER ASSY
EF-CG	2TP1-3	.SWITCH- (V91929) (OPT (VK6596))	091116	1
EF-CG	2TP1-3M	.SWITCH- (V91929) (OPT (VK6596))	117276	1
F-DR	WC1503	.SWITCH- (VK0653)		1
FE-DAJ	M300-1264	.RELAY- (VK6265) (USED WITH SOCKET: M12883-41-16 (V81349))		1
FF-DAJ	M300-1264	.RELAY- (VK6265) (USED WITH SOCKET: M12883-41-16 (V81349))		1
F15-DAC	5920-99-0120075	.FUSE-3AMP (VK0657)		1
F31-ZK	5920-99-0120075	.FUSE-3AMP (VK0657)		1
G-XZ	HWBUN1146D10B	.TERMINAL BLOCK- (VK0574)		1
H-XZ	9274-4024	.RELAY- (VK6265)		1
J-XZ	9274-4024	.RELAY- (VK6265)		1
K	HWBUN1736D10B	.TERMINAL BLOCK- (VK0574) (OPT 72444-030-0AV2)		1
K-XZ	9274-4024	.RELAY- (VK6265)		1
M-GG	HWBUN1146D10B	.TERMINAL BLOCK- (VK0574)		1
N-WB	72444-030-0AV2	.TERMINAL BLOCK- (VK0574)		1
SC-P	MTC100YH2-009	.SHELL-PLUG (VK1010) (USED WITH WAFERS: TYPE A, MTC100KT2-1103 DUMMY, MTCX2X200-200)	091254	1
SC-P	MTC100YH2-009	.SHELL-PLUG (VK1010) (USED WITH INSERTS: PRIMARY MTC100YC1-003 SECONDARY MTC100YC1-004)	255276	1
		MISSING ITEM NO. NOT APPLICABLE		

– ITEM NOT ILLUSTRATED

IDENT	PART NUMBER	1234567 NOMENCLATURE	EFFECT FROM TO	UNITS PER ASSY
SC-R	MTC100YH2-010	.SHELL-RECEPTACLE (VK1010) (USED WITH WAFERS: TYPE A, MTC100KT2-1101 DUMMY, MTCX2X200-200)	091254	1
SC-R	MTC100YH2-010	.SHELL-RECEPTACLE (VK1010) (USED WITH INSERTS: PRIMARY MTC100YC1-001 SECONDARY MTC100YC1-002)	255276	1
TC-DAJ	HWB1736D10B	.TERMINAL BLOCK- (VK0574)		1
Y3-DAJ	MRTB20E04-111	.TERMINAL JUNCTION MODULE- (V14283)		1
		MISSING ITEM NO. NOT APPLICABLE		

– ITEM NOT ILLUSTRATED

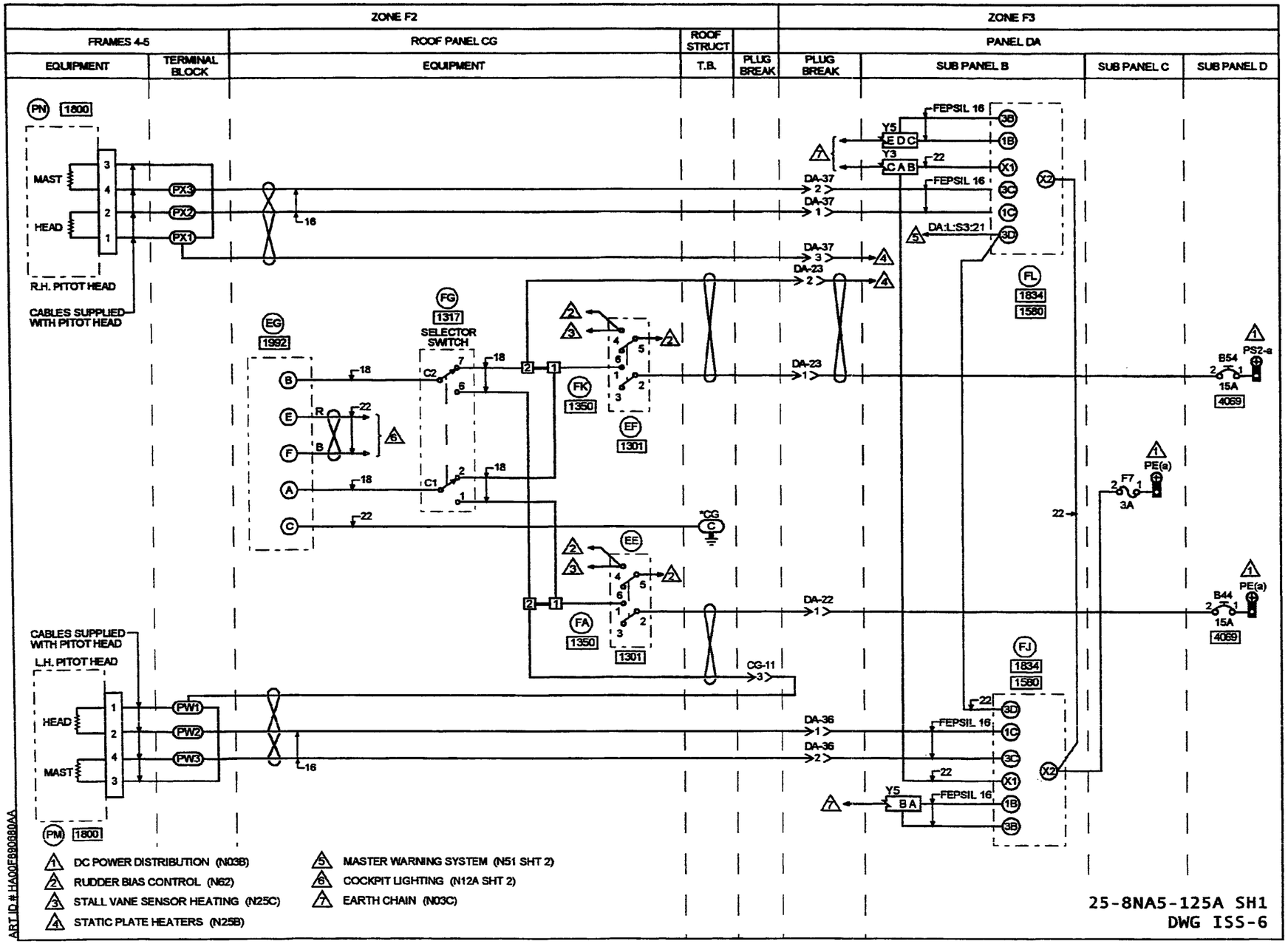
ZONE F2
ZONE F3
FRAMES 4-5
ROOF PANEL CG
ROOF STRUCT
PANEL DA
EQUIPMENT
TERMINAL BLOCK
EQUIPMENT
T.B.
PLUG BREAK
PLUG BREAK
SUB PANEL B
SUB PANEL C
SUB PANEL D
PN 1800
MAST
HEAD
R.H. PITOT HEAD
CABLES SUPPLIED WITH PITOT HEAD
PX3
PX2
PX1
16
DA-37
DA-23
DA-22
CG-11
DA-36
FEPSIL 16
DA:L:S3:21
Y5
Y3
EDC
CAB
BA
22
X1
X2
1B
3B
1C
3C
3D
FL
1834
1580
FJ
EG
1992
FG
1317
SELECTOR SWITCH
FK
1350
EF
1301
EE
FA
1350
1301
*CG
PS2-a
B54
15A
4069
PE(a)
F7
3A
B44
CABLES SUPPLIED WITH PITOT HEAD
L.H. PITOT HEAD
PW1
PW2
PW3
PM 1800
DC POWER DISTRIBUTION (N03B)
RUDDER BIAS CONTROL (N62)
STALL VANE SENSOR HEATING (N25C)
STATIC PLATE HEATERS (N25B)
MASTER WARNING SYSTEM (N51 SHT 2)
COCKPIT LIGHTING (N12A SHT 2)
EARTH CHAIN (N03C)
ART ID # HA00F880880AA
25-8NA5-125A SH1
DWG ISS-6

IDENT	PART NUMBER	1234567 NOMENCLATURE	EFFECT FROM TO	UNITS PER ASSY
		PITOT HEAD HEATERS	091276	
	25-8NA5-125A	WIRING DIAGRAM- (MOD 253149C) (MOD 25F505A)		RF
B44-DAD	25-8NF2217-15	.CIRCUIT BREAKER-15AMP (ALTERED FROM 483-96TCK14-15A (VU0091))		1
B54-DAD	25-8NF2217-15	.CIRCUIT BREAKER-15AMP (ALTERED FROM 483-96TCK14-15A (VU0091))		1
CG11-P	MTCR161-04P	.CONNECTOR-PIN (VK1010)		1
CG11-R	MTCR101-04S	.CONNECTOR-SOCKET (VK1010)		1
DA22-P	MTCR161-04P	.CONNECTOR-PIN (VK1010)		1
DA22-R	MTCR101-04S	.CONNECTOR-SOCKET (VK1010)		1
DA23-P	MTCR161-04P	.CONNECTOR-PIN (VK1010)		1
DA23-R	MTCR101-04S	.CONNECTOR-SOCKET (VK1010)		1
DA36-P	MTCR161-04P	.CONNECTOR-PIN (VK1010)		1
DA36-R	MTCR101-04S	.CONNECTOR-SOCKET (VK1010)		1
DA37-P	MTCR161-04P	.CONNECTOR-PIN (VK1010)		1
DA37-R	MTCR101-04S	.CONNECTOR-SOCKET (VK1010)		1
EE-CG	2TP1-3	.SWITCH- (V91929) (OPT (VK6596))		1
EF-CG	2TP1-3	.SWITCH- (V91929) (OPT (VK6596))		1
		MISSING ITEM NO. NOT APPLICABLE		

– ITEM NOT ILLUSTRATED

IDENT	PART NUMBER	1234567 NOMENCLATURE	EFFECT FROM TO	UNITS PER ASSY
EG-CG	2132-01-0017	.AMMETER- (VU1588)	092093 095096 098105 107108 111111 113114 117117 119119 121129 132142 144145 147147 150163 166176 178179 181181 183183 185185 187189 191191 193193 195196 199207 209209 212218 220221 223223 225225 229232 234234 236236 238276	1
FA-CG	IS13247-2	.SHUNT- (VU1971)		1
FG-CG	8A36-01-2-2N	.SWITCH- (V81073)		1
FJ-DAB	770-537	.DETECTOR-CURRENT LEVEL (VK8165)		1
FK-CG	IS13247-2	.SHUNT- (VU1971)		1
FL-DAB	770-537	.DETECTOR-CURRENT LEVEL (VK8165)		1
F7-DAC	5920-99-0120075	.FUSE-3AMP (VK0657)		1
PM	SD853JF	.PITOT HEAD- (VK5459)		1
PN	SD853JF	.PITOT HEAD- (VK5459)		1
PW	HWBUN1146S5B	.TERMINAL BLOCK- (VK0574)		1
		MISSING ITEM NO. NOT APPLICABLE		

– ITEM NOT ILLUSTRATED

IDENT	PART NUMBER	1234567 NOMENCLATURE	EFFECT FROM TO	UNITS PER ASSY
PX	HWBUN1146S5B	.TERMINAL BLOCK- (VK0574)		1
Y3-DAB	MRTB20E04-111	.TERMINAL JUNCTION MODULE- (V14283)		1
Y5-DAB	MRTB16E04-111	.TERMINAL JUNCTION MODULE- (V14283)		1
		MISSING ITEM NO. NOT APPLICABLE		

– ITEM NOT ILLUSTRATED

WINDOWS, WINDSCREEN AND DOORS

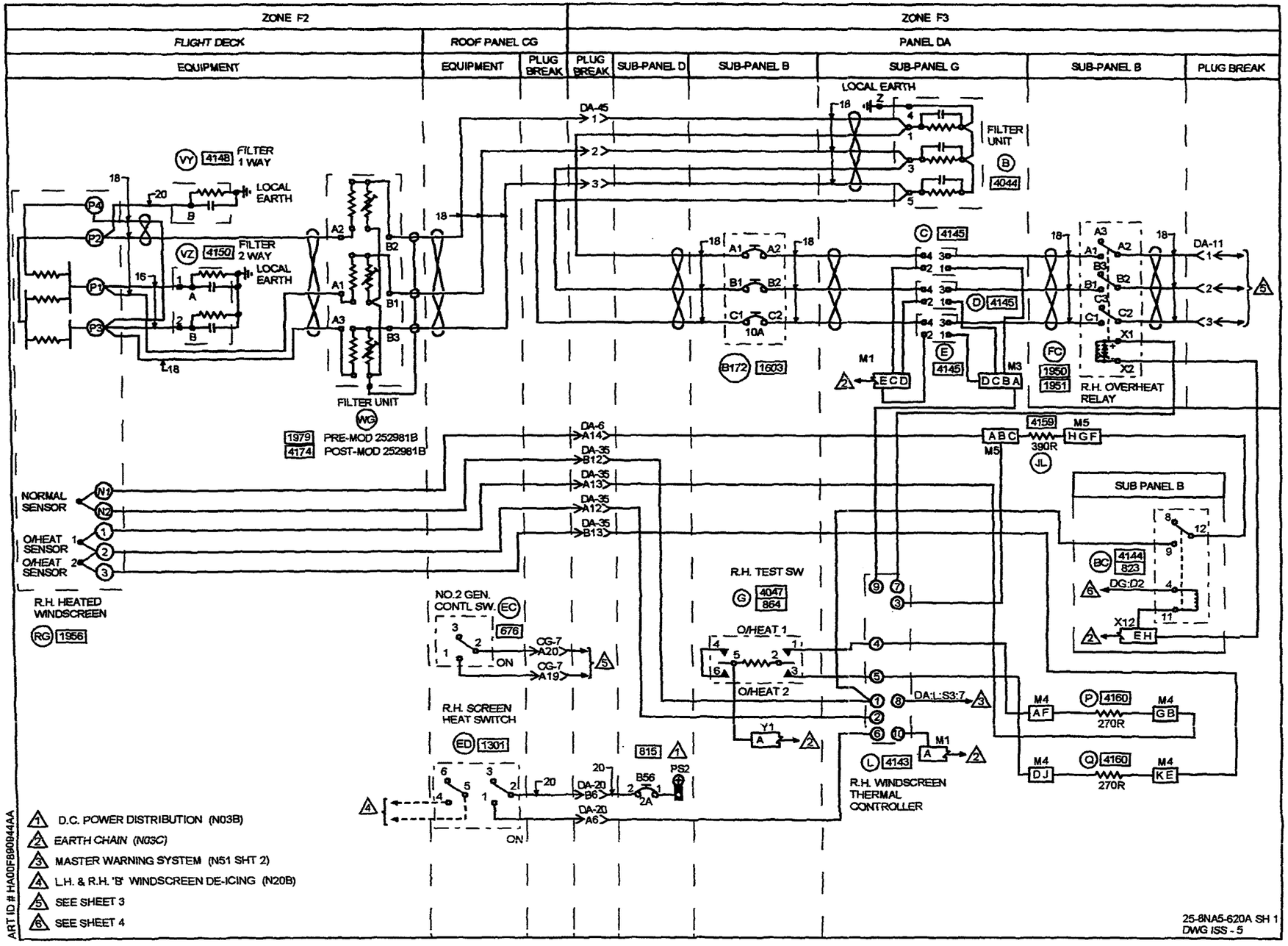
ZONE F2
ZONE F3
FLIGHT DECK
ROOF PANEL CG
PANEL DA
EQUIPMENT
EQUIPMENT
PLUG BREAK
PLUG BREAK
SUB-PANEL D
SUB-PANEL B
SUB-PANEL G
SUB-PANEL B
PLUG BREAK
LOCAL EARTH
FILTER UNIT
4044
FILTER 1 WAY
4148
LOCAL EARTH
FILTER 2 WAY
4150
LOCAL EARTH
FILTER UNIT
1979 PRE-MOD 252981B
4174 POST-MOD 252981B
NORMAL SENSOR
O/HEAT SENSOR
O/HEAT SENSOR
R.H. HEATED WINDSCREEN
1956
NO.2 GEN. CONTL SW.
676
ON
R.H. SCREEN HEAT SWITCH
1301
ON
R.H. TEST SW
4047
864
O/HEAT 1
O/HEAT 2
R.H. WINDSCREEN THERMAL CONTROLLER
4143
R.H. OVERHEAT RELAY
1950
1951
SUB PANEL B
4144
823
4159
390R
4160
270R
4160
270R
10A
1603
815
PS2
B56
2A
1. D.C. POWER DISTRIBUTION (N03B)
2. EARTH CHAIN (N03C)
3. MASTER WARNING SYSTEM (N51 SHT 2)
4. L.H. & R.H. 'B' WINDSCREEN DE-ICING (N20B)
5. SEE SHEET 3
6. SEE SHEET 4
ART ID # HA00F690044AA
25-8NA5-620A SH 1
DWG ISS - 5

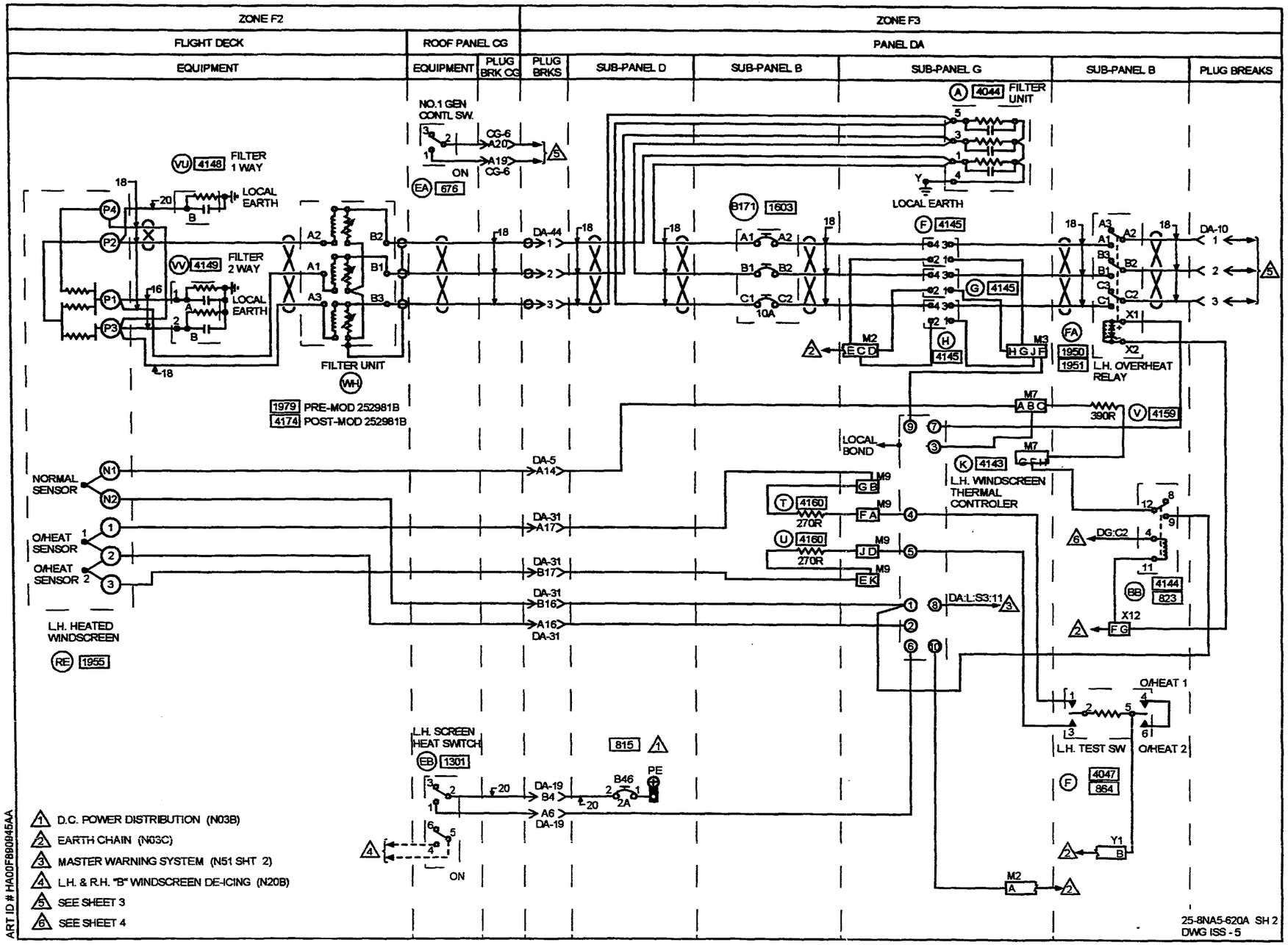
ZONE F2
ZONE F3
FLIGHT DECK
ROOF PANEL CG
PANEL DA
EQUIPMENT
EQUIPMENT
PLUG BRK CG
PLUG BRKS
SUB-PANEL D
SUB-PANEL B
SUB-PANEL G
SUB-PANEL B
PLUG BREAKS
NO.1 GEN CONTL SW.
ON
EA 676
CG-6 A20
A19 CG-6
VU 4148 FILTER 1 WAY
LOCAL EARTH
VV 4149 FILTER 2 WAY
LOCAL EARTH
FILTER UNIT
WH
1979 PRE-MOD 252981B
4174 POST-MOD 252981B
A 4044 FILTER UNIT
LOCAL EARTH
B171 1603
10A
F 4145
G 4145
H 4145
FA
1950
1951
L.H. OVERHEAT RELAY
X1
X2
DA-44
DA-10
M2 E C D
M3 H G J F
M7 A B C
390R
V 4159
LOCAL BOND
K 4143
L.H. WINDSCREEN THERMAL CONTROLER
M7 G E H
M9 G B
M9 F A
M9 J D
M9 E K
T 4160 270R
U 4160 270R
DA-5 A14
DA-31 A17
DA-31 B17
DA-31 B16
A16 DA-31
NORMAL SENSOR
O/HEAT SENSOR 1
O/HEAT SENSOR 2
L.H. HEATED WINDSCREEN
RE 1955
DA:L:S3:11
DG:C2
BB 4144 823
X12
F G
O/HEAT 1
O/HEAT 2
L.H. TEST SW
F 4047 864
Y1 B
M2 A
L.H. SCREEN HEAT SWITCH
EB 1301
815
DA-19 B4
A6 DA-19
B46
PE
2A
ON
1 D.C. POWER DISTRIBUTION (N03B)
2 EARTH CHAIN (N03C)
3 MASTER WARNING SYSTEM (N51 SHT 2)
4 L.H. & R.H. "B" WINDSCREEN DE-ICING (N20B)
5 SEE SHEET 3
6 SEE SHEET 4
ART ID # HA00F880945AA
25-8NA5-620A SH 2
DWG ISS - 5

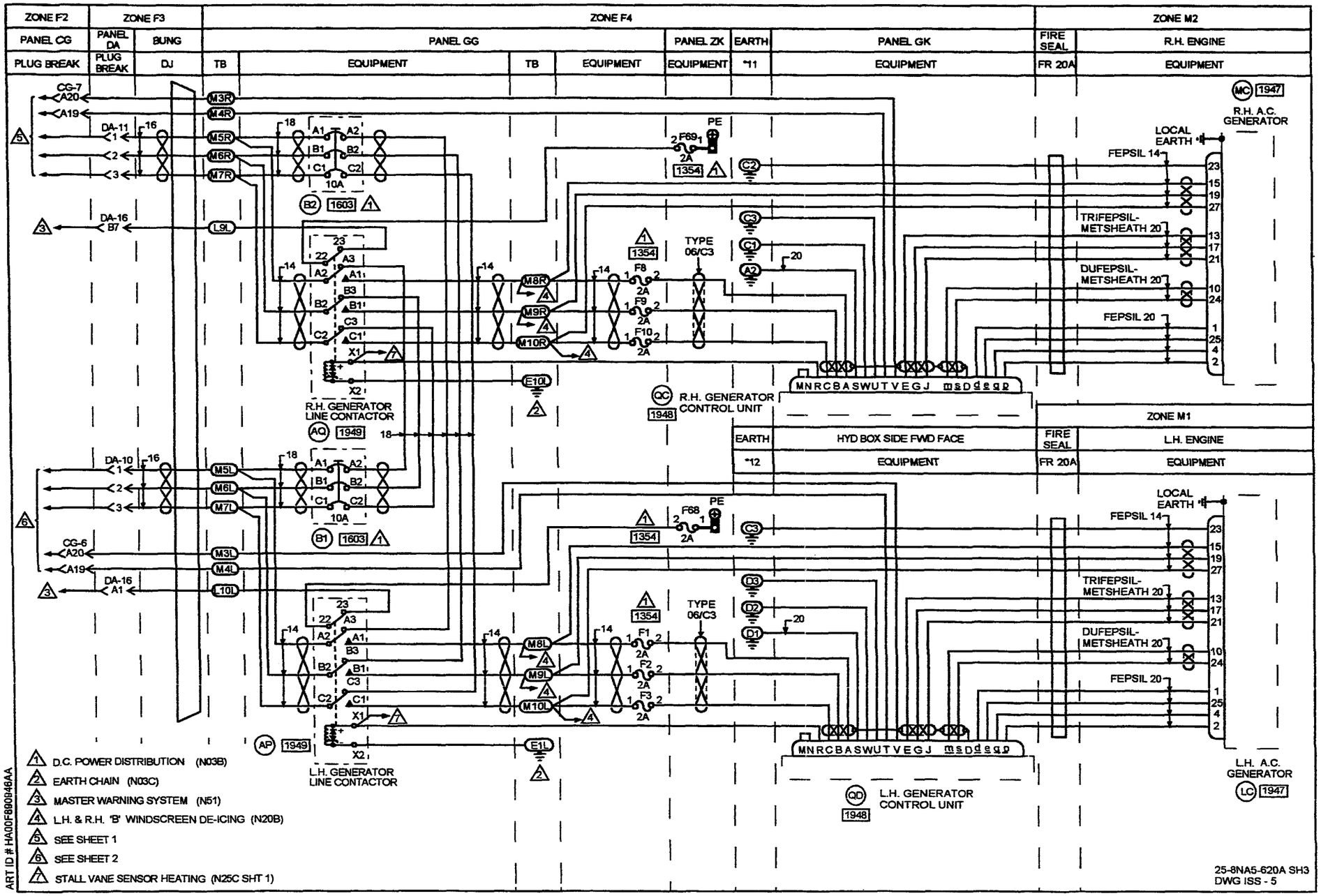
ZONE F2
ZONE F3
ZONE F4
ZONE M2
PANEL CG
PANEL DA
BUNG
PANEL GG
PANEL ZK
EARTH
PANEL GK
FIRE SEAL
R.H. ENGINE
PLUG BREAK
PLUG BREAK
DJ
TB
EQUIPMENT
TB
EQUIPMENT
EQUIPMENT
*11
EQUIPMENT
FR 20A
EQUIPMENT
R.H. A.C. GENERATOR
LOCAL EARTH
FEPSIL 14
TRIFEPSIL-METSHEATH 20
DUFEPSIL-METSHEATH 20
FEPSIL 20
R.H. GENERATOR LINE CONTACTOR
R.H. GENERATOR CONTROL UNIT
TYPE 06/C3
ZONE M1
EARTH
HYD BOX SIDE FWD FACE
FIRE SEAL
L.H. ENGINE
*12
EQUIPMENT
FR 20A
EQUIPMENT
L.H. GENERATOR LINE CONTACTOR
L.H. GENERATOR CONTROL UNIT
L.H. A.C. GENERATOR
1 D.C. POWER DISTRIBUTION (N03B)
2 EARTH CHAIN (N03C)
3 MASTER WARNING SYSTEM (N51)
4 L.H. & R.H. 'B' WINDSCREEN DE-ICING (N20B)
5 SEE SHEET 1
6 SEE SHEET 2
7 STALL VANE SENSOR HEATING (N25C SHT 1)
ART ID # HA00F890946AA
25-8NA5-620A SH3
DWG ISS - 5

ZONE F3

PANEL DA

SUB-PANEL B

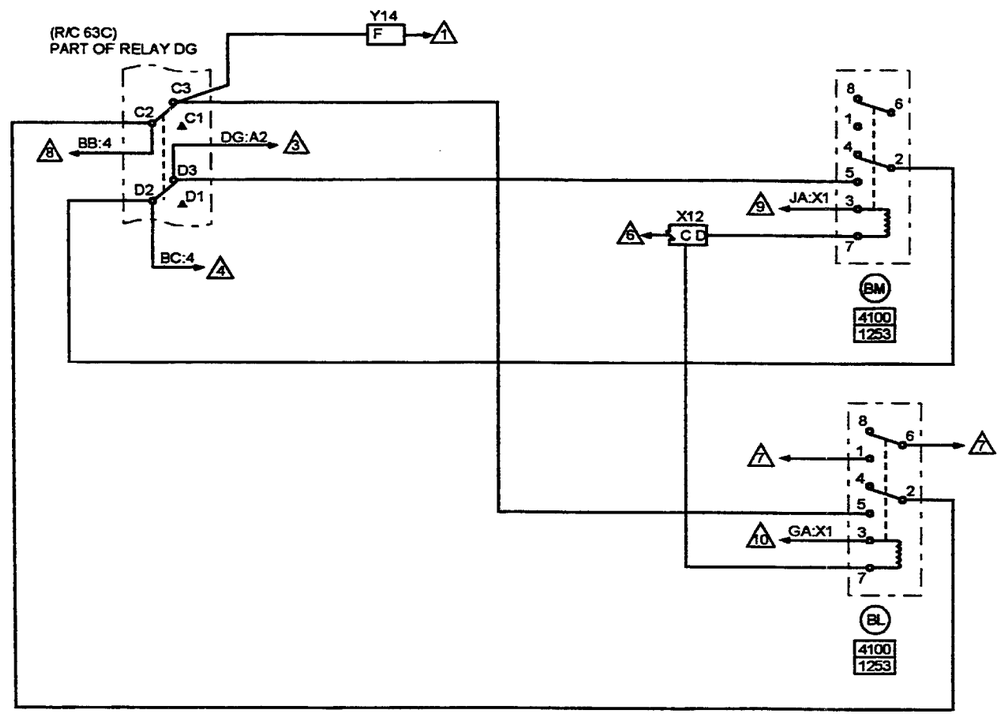

1. LANDING GEAR LEVER LOCK (N17)
3. ENGINE IDLE SPEED CONTROL (N63C SHT. 1)
4. SEE SHEET 1
6. EARTH CHAIN (N03C)
7. ANGLE OF ATTACK (IF FITTED) (N81)
8. SEE SHEET 2
9. STALL IDENT SYSTEM (N55 SHT. 6)
10. STALL IDENT SYSTEM (N55 SHT. 4)

ART ID # HA00F890947AA

25-8NA5-620A SH 4
DWG ISS - 4

IDENT	PART NUMBER	1234567 NOMENCLATURE	EFFECT FROM TO	UNITS PER ASSY
		LH AND RH A WINDSCREEN DE-ICING	091145 147147 149151	
	25-8NA5-620A	WIRING DIAGRAM- (MODIFIED BY SB24-285-253273A) (MODIFIED BY SB30-052-253261B) (MOD 253149C)		RF
A-DAG	HC921H0467-000	.FILTER UNIT		1
AP-GG	HA5N	.CONTACTOR- (VK6265)		1
AQ-GG	HA5N	.CONTACTOR- (VK6265)		1
B-DAG	HC921H0467-000	.FILTER UNIT		1
BB-DAB	HDD45F2H06	.RELAY- (VK1793) (USED WITH BASE: 418539)		1
BC-DAB	HDD45F2H06	.RELAY- (VK1793) (USED WITH BASE: 418539)		1
BL-DAB	HDS8SF3J03	.RELAY- (VK1793) (USED WITH SOCKET: RSE120074 (V58982))		1
BM-DAB	HDS8SF3J03	.RELAY- (VK1793) (USED WITH SOCKET: RSE120074 (V58982))		1
B1-GG	583-96TCK14-10A	.CIRCUIT BREAKER-10AMP (VU0091)		1
B171-DAD	583-96TCK14-10A	.CIRCUIT BREAKER-10AMP (VU0091)		1
B172-DAD	583-96TCK14-10A	.CIRCUIT BREAKER-10AMP (VU0091)		1
B2-GG	583-96TCK14-10A	.CIRCUIT BREAKER-10AMP (VU0091)		1
B46-DAD	483TCG11J25-2A	.CIRCUIT BREAKER-2AMP (VU0091)		1
B56-DAD	483TCG11J25-2A	.CIRCUIT BREAKER-2AMP (VU0091)		1
C-DAG	652-1	.RELAY- (V10639)	091102	1
C-DAG	652-2W	.RELAY- (V10639)	103145 147147 149151	1
		MISSING ITEM NO. NOT APPLICABLE		

– ITEM NOT ILLUSTRATED

IDENT	PART NUMBER	1234567 NOMENCLATURE	EFFECT FROM TO	UNITS PER ASSY
CG6-P	MTC100YH2-009	.SHELL-PLUG (VK1010) (USED WITH WAFERS: TYPE A, MTC100KT2-1101 TYPE B, MTC100KT2-1102)		1
CG6-R	MTC100YH2-010	.SHELL-RECEPTACLE (VK1010) (USED WITH WAFERS: TYPE A, MTC100KT2-1103 TYPE B, MTC100KT2-1104)		1
CG7-P	MTC100YH2-009	.SHELL-PLUG (VK1010) (USED WITH WAFERS: TYPE A, MTC100KT2-1101 TYPE B, MTC100KT2-1102)		1
CG7-R	MTC100YH2-010	.SHELL-RECEPTACLE (VK1010) (USED WITH WAFERS: TYPE A, MTC100KT2-1103 TYPE B, MTC100KT2-1104)		1
D-DAG	652-1	.RELAY- (V10639)	091102	1
D-DAG	652-2W	.RELAY- (V10639)	103145 147147 149151	1
DA10-P	MTCR161-04P	.CONNECTOR-PIN (VK1010)		1
DA10-R	MTCR101-04S	.CONNECTOR-SOCKET (VK1010)		1
DA11-P	MTCR161-04P	.CONNECTOR-PIN (VK1010)		1
DA11-R	MTCR101-04S	.CONNECTOR-SOCKET (VK1010)		1
DA16-P	MTC100YH1-003	.SHELL-PLUG (VK1010) (USED WITH WAFERS: TYPE A, MTC100KT1-1101 TYPE B, MTC100KT1-1102)		1
DA16-R	MTC100YH1-004	.SHELL-RECEPTACLE (VK1010) (USED WITH WAFERS: TYPE A, MTC100KT1-1103 TYPE B, MTC100KT1-1104)		1
DA19-P	MTC100YH2-009	.SHELL-PLUG (VK1010) (USED WITH WAFERS: TYPE A, MTC100KT2-1101 TYPE B, MTC100KT2-1102)		1

MISSING ITEM NO. NOT APPLICABLE

– ITEM NOT ILLUSTRATED

IDENT	PART NUMBER	1234567 NOMENCLATURE	EFFECT FROM TO	UNITS PER ASSY
DA19-R	MTC100YH2-010	.SHELL-RECEPTACLE (VK1010) (USED WITH WAFERS: TYPE A, MTC100KT2-1103 TYPE B, MTC100KT2-1104)		1
DA20-P	MTC100YH2-009	.SHELL-PLUG (VK1010) (USED WITH WAFERS: TYPE A, MTC100KT2-1101 TYPE B, MTC100KT2-1102)		1
DA20-R	MTC100YH2-010	.SHELL-RECEPTACLE (VK1010) (USED WITH WAFERS: TYPE A, MTC100KT2-1103 TYPE B, MTC100KT2-1104)		1
DA31-P	MTC100YH2-009	.SHELL-PLUG (VK1010) (USED WITH WAFERS: TYPE A, MTC100KT2-1101 TYPE B, MTC100KT2-1102)		1
DA31-R	MTC100YH2-010	.SHELL-RECEPTACLE (VK1010) (USED WITH WAFERS: TYPE A, MTC100KT2-1103 TYPE B, MTC100KT2-1104)		1
DA35-P	MTC100YH2-009	.SHELL-PLUG (VK1010) (USED WITH WAFERS: TYPE A, MTC100KT2-1101 TYPE B, MTC100KT2-1102)		1
DA35-R	MTC100YH2-010	.SHELL-RECEPTACLE (VK1010) (USED WITH WAFERS: TYPE A, MTC100KT2-1103 TYPE B, MTC100KT2-1104)		1
DA44-P	MTCR161-04P	.CONNECTOR-PIN (VK1010)		1
DA44-R	MTCR101-04S	.CONNECTOR-SOCKET (VK1010)		1
DA45-P	MTCR161-04P	.CONNECTOR-PIN (VK1010)		1
DA45-R	MTCR101-04S	.CONNECTOR-SOCKET (VK1010)		1
DA5-P	MTC100YH2-009	.SHELL-PLUG (VK1010) (USED WITH WAFERS: TYPE A, MTC100KT2-1101 TYPE B, MTC100KT2-1102)		1
		MISSING ITEM NO. NOT APPLICABLE		

– ITEM NOT ILLUSTRATED

IDENT	PART NUMBER	1234567 NOMENCLATURE	EFFECT FROM TO	UNITS PER ASSY
DA5-R	MTC100YH2-010	.SHELL-RECEPTACLE (VK1010) (USED WITH WAFERS: TYPE A, MTC100KT2-1103 TYPE B, MTC100KT2-1104)		1
DA6-P	MTC100YH2-009	.SHELL-PLUG (VK1010) (USED WITH WAFERS: TYPE A, MTC100KT2-1101 TYPE B, MTC100KT2-1102)		1
DA6-R	MTC100YH2-010	.SHELL-RECEPTACLE (VK1010) (USED WITH WAFERS: TYPE A, MTC100KT2-1103 TYPE B, MTC100KT2-1104)		1
DG-DAB	M400-1265	.RELAY- (VK6265) (USED WITH SOCKET: M12883-40-19 (V81349))		1
DJ	422255-7	.BUNG- (VK1793)		1
E-DAG	652-1	.RELAY- (V10639)	091102	1
E-DAG	652-2W	.RELAY- (V10639)	103145 147147 149151	1
E-GG	HWBUN1146D10B	.TERMINAL BLOCK- (VK0574)		1
EA-CG	1TP1-3	.SWITCH- (V91929)	091116	1
EA-CG	1TP1-3M	.SWITCH- (V91929)	117145 147147 149151	1
EB-CG	2TP1-3	.SWITCH- (V91929)	091116	1
EB-CG	2TP1-3M	.SWITCH- (V91929)	117145 147147 149151	1
EC-CG	1TP1-3	.SWITCH- (V91929)	091116	1
EC-CG	1TP1-3M	.SWITCH- (V91929)	117145 147147 149151	1
ED-CG	2TP1-3	.SWITCH- (V91929)	091116	1
ED-CG	2TP1-3M	.SWITCH- (V91929)	117145 147147 149151	1
		MISSING ITEM NO. NOT APPLICABLE		

– ITEM NOT ILLUSTRATED

IDENT	PART NUMBER	1234567 NOMENCLATURE	EFFECT FROM TO	UNITS PER ASSY
F-DAB	2TL1-7	.SWITCH- (V58960) (USED WITH RESISTOR: MR5-680RPM1PCT (VK0064) (OPT TR5-680R (VK4184)))		1
F-DAG	652-1	.RELAY- (V10639)	091102	1
F-DAG	652-2W	.RELAY- (V10639)	103145 147147 149151	1
FA-DAB	M500-1383	.RELAY- (VK6265) (USED WITH SOCKET: M12883-48-02 (V81349))		1
FC-DAB	M500-1383	.RELAY- (VK6265) (USED WITH SOCKET: M12883-48-02 (V81349))		1
F1-GG	5920-99-0120074	.FUSE-2AMP (VK0657)		1
F10-GG	5920-99-0120074	.FUSE-2AMP (VK0657)		1
F2-GG	5920-99-0120074	.FUSE-2AMP (VK0657)		1
F3-GG	5920-99-0120074	.FUSE-2AMP (VK0657)		1
F68-ZK	5920-99-0120074	.FUSE-2AMP (VK0657)		1
F69-ZK	5920-99-0120074	.FUSE-2AMP (VK0657)		1
F8-GG	5920-99-0120074	.FUSE-2AMP (VK0657)		1
F9-GG	5920-99-0120074	.FUSE-2AMP (VK0657)		1
G-DAB	2TL1-7	.SWITCH- (V58960) (USED WITH RESISTOR: MR5-680RPM1PCT (VK0064) (OPT TR5-680R (VK4184)))		1
G-DAG	652-1	.RELAY- (V10639)	091102	1
G-DAG	652-2W	.RELAY- (V10639)	103145 147147 149151	1
		MISSING ITEM NO. NOT APPLICABLE		

– ITEM NOT ILLUSTRATED

	IDENT	PART NUMBER	1234567 NOMENCLATURE	EFFECT FROM TO	UNITS PER ASSY
	H-DAG	652-1	.RELAY- (V10639)	091102	1
	H-DAG	652-2W	.RELAY- (V10639)	103145 147147 149151	1
	JL-DAG	MFR5-2K4PM1PCT	.RESISTOR-2K4 (VK0064)		1
	K-DAG	ND0075-2011	.CONTROLLER-MK22 (VK0672)		1
	L-DAG	ND0075-2011	.CONTROLLER-MK22 (VK0672)		1
	L-GG	HWBUN1146D10B	.TERMINAL BLOCK- (VK0574)		1
	LC	BA02801-1	.GENERATOR- (VK4358)		1
	M-GG	HWBUN1146D10B	.TERMINAL BLOCK- (VK0574)		1
	MC	BA02801-1	.GENERATOR- (VK4358)		1
R R	M1-DAG	M81714-2DA1	.JUNCTION BLOCK- (V81349)		1
R R	M2-DAG	M81714-2DA1	.JUNCTION BLOCK- (V81349)		1
R R	M3-DAG	M81714-2DB1	.JUNCTION BLOCK- (V81349)		1
	M4-DAG	MRTB20E09-111	.TERMINAL JUNCTION MODULE- (V14283)		1
	M5-DAG	MRTB20E57-111	.TERMINAL JUNCTION MODULE- (V14283)		1
	M7-DAG	MRTB20E57-111	.TERMINAL JUNCTION MODULE- (V14283)		1
	M9-DAG	MRTB20E09-111	.TERMINAL JUNCTION MODULE- (V14283)		1
	P-DAG	MFR4-270RPM1PCT	.RESISTOR-270R (VK0064)		1
	Q-DAG	MFR4-270RPM1PCT	.RESISTOR-270R (VK0064)		1
	QC-GK	CB02701	.CONTROL UNIT- (VK4358)		1
	QD	CB02701	.CONTROL UNIT- (VK4358)		1
	RE	NF24016-151	.WINDSCREEN-HEATED,LH (VK0672)	091131	1
	RE	NF24016-157	.WINDSCREEN-HEATED,LH (VK0672)	132145 147147 149151	1
	RG	NF24016-152	.WINDSCREEN-HEATED,RH (VK0672)	091131	1
			MISSING ITEM NO. NOT APPLICABLE		

– ITEM NOT ILLUSTRATED

	IDENT	PART NUMBER	1234567 NOMENCLATURE	EFFECT FROM TO	UNITS PER ASSY
	RG	NF24016-158	.WINDSCREEN-HEATED,RH (VK0672)	132145 147147 149151	1
	T-DAB	MFR4-270RPM1PCT	.RESISTOR-270R (VK0064)		1
	U-DAB	MFR4-270RPM1PCT	.RESISTOR-270R (VK0064)		1
	V-DAB	MFR5-2K4PM1PCT	.RESISTOR-2K4 (VK0064)		1
	VU	25-8NF2065-1A	.FILTER		1
	VV	25-8NF2061-1A	.FILTER BOARD		1
	VY	25-8NF2065-1A	.FILTER		1
	VZ	25-8NF2061-1A	.FILTER BOARD		1
	WG	ND0075-1875	.FILTER UNIT- (VK0672)		1
	WH	ND0075-1875	.FILTER UNIT- (VK0672)		1
R R	X12-DAB	M81714-2DA1	.JUNCTION BLOCK- (V81349)		1
R R	Y1-DAB	M81714-2DA1	.JUNCTION BLOCK- (V81349)		1
R R	Y14-DAB	M81714-2DA1	.JUNCTION BLOCK- (V81349)		1
			MISSING ITEM NO. NOT APPLICABLE		

– ITEM NOT ILLUSTRATED

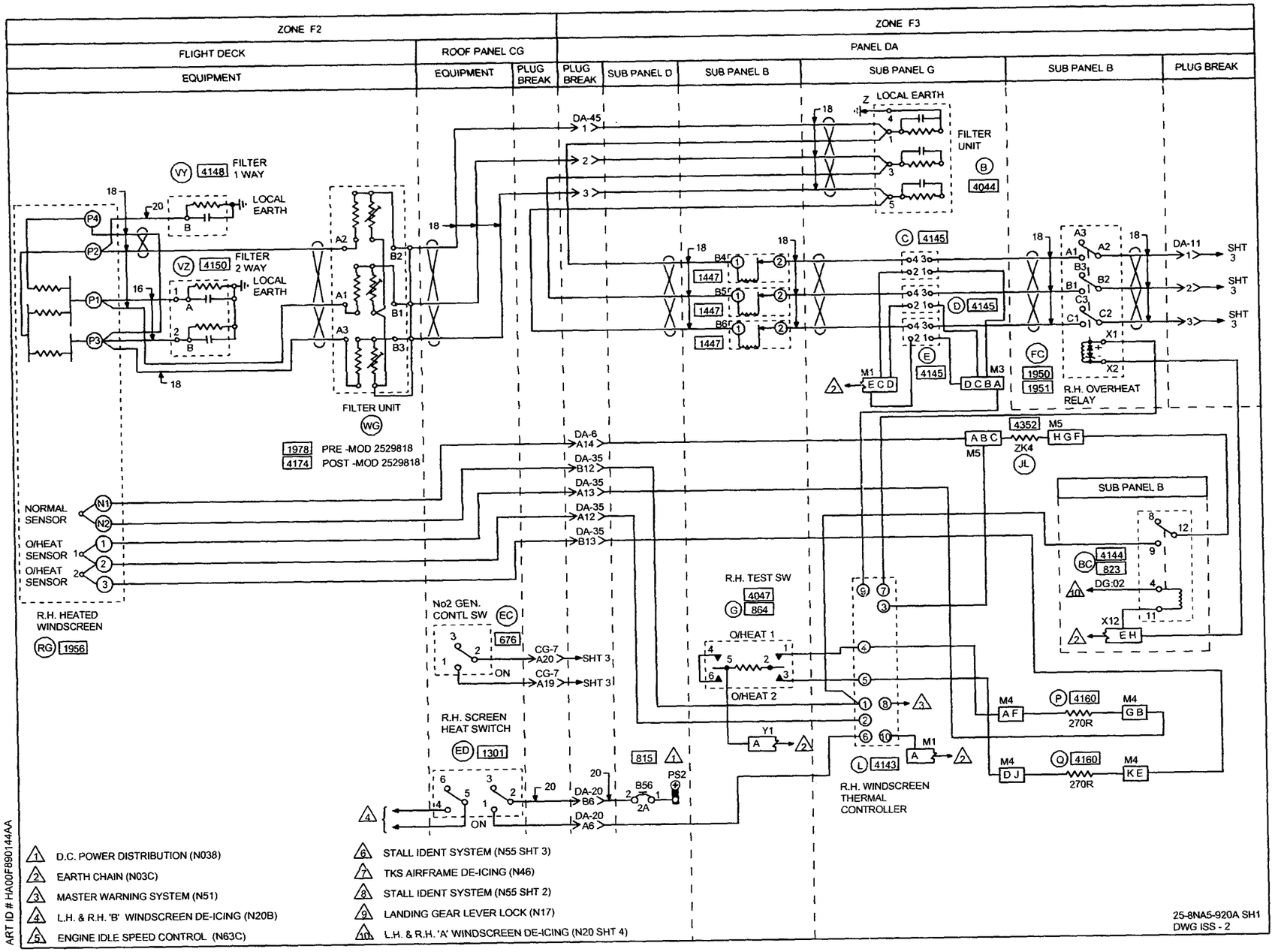
ZONE F2
ZONE F3
FLIGHT DECK
EQUIPMENT
ROOF PANEL CG
EQUIPMENT
PLUG BREAK
PANEL DA
PLUG BREAK
SUB PANEL D
SUB PANEL B
SUB PANEL G
SUB PANEL B
PLUG BREAK
VY 4148 FILTER 1 WAY
LOCAL EARTH
VZ 4150 FILTER 2 WAY
LOCAL EARTH
FILTER UNIT WG
1978 PRE -MOD 2529818
4174 POST -MOD 2529818
NORMAL SENSOR
O/HEAT SENSOR
O/HEAT SENSOR
R.H. HEATED WINDSCREEN RG 1956
DA-45
DA-6 A14
DA-35 B12
DA-35 A13
DA-35 A12
DA-35 B13
Z LOCAL EARTH
FILTER UNIT B 4044
C 4145
D 4145
E 4145
1447
FC 1950 1951 R.H. OVERHEAT RELAY
DA-11
SHT 3
4352 M5 ABC ZK4 HGF
JL
SUB PANEL B
BC 4144 823
DG:02
X12 EH
R.H. TEST SW 4047 G 864
O/HEAT 1
O/HEAT 2
No2 GEN. CONTL SW EC 676
CG-7 A20
CG-7 A19
ON
R.H. SCREEN HEAT SWITCH ED 1301
DA-20 B6
DA-20 A6
815
PS2
B56 2A
L 4143 R.H. WINDSCREEN THERMAL CONTROLLER
M4 AF P 4160 270R M4 GB
M4 DJ Q 4160 270R M4 KE
M1 A
Y1 A
1 D.C. POWER DISTRIBUTION (N038)
2 EARTH CHAIN (N03C)
3 MASTER WARNING SYSTEM (N51)
4 L.H. & R.H. 'B' WINDSCREEN DE-ICING (N20B)
5 ENGINE IDLE SPEED CONTROL (N63C)
6 STALL IDENT SYSTEM (N55 SHT 3)
7 TKS AIRFRAME DE-ICING (N46)
8 STALL IDENT SYSTEM (N55 SHT 2)
9 LANDING GEAR LEVER LOCK (N17)
10 L.H. & R.H. 'A' WINDSCREEN DE-ICING (N20 SHT 4)
ART ID # HA00F890144AA
25-8NA5-920A SH1
DWG ISS - 2

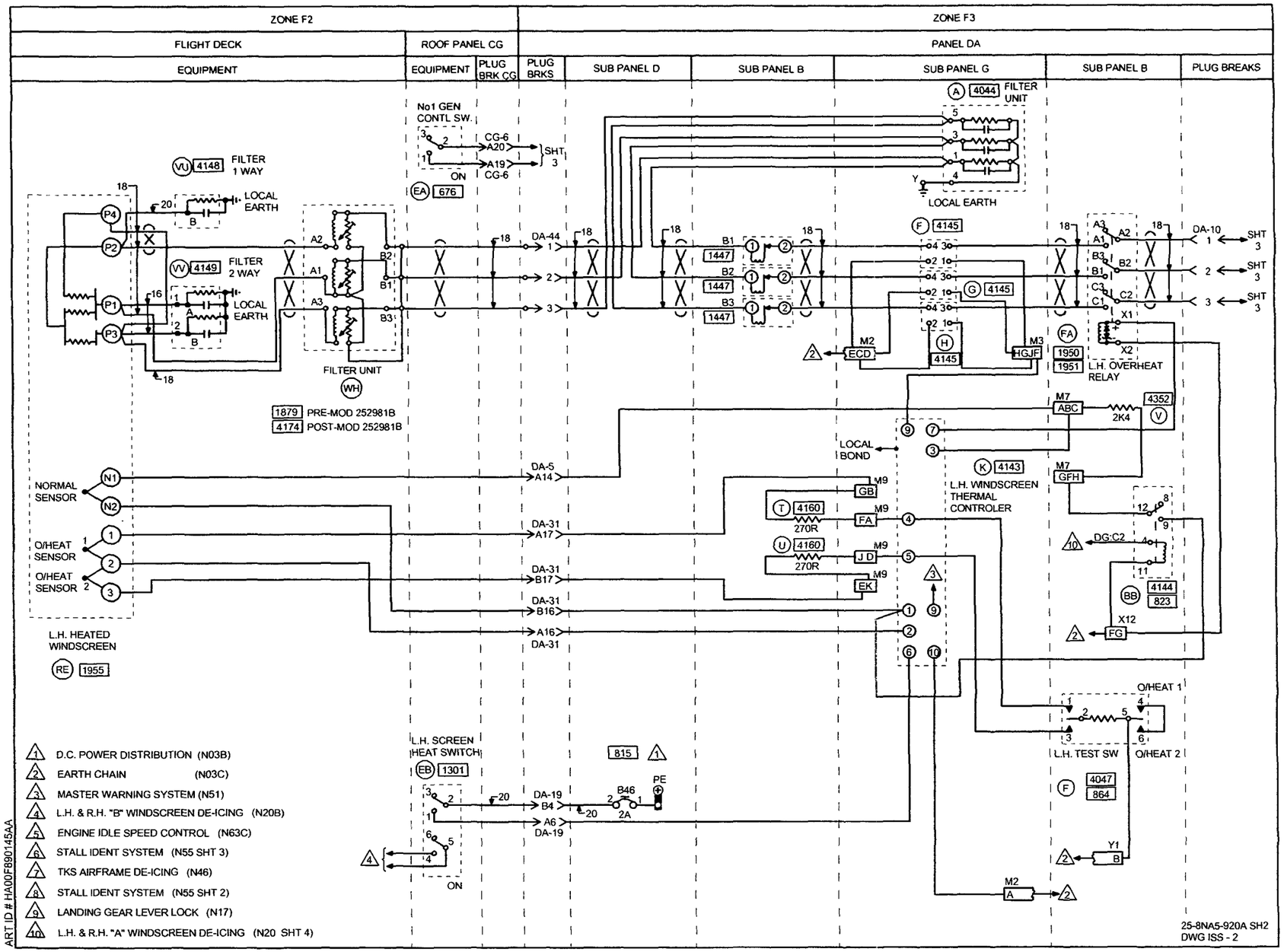
ZONE F2
ZONE F3
FLIGHT DECK
ROOF PANEL CG
PANEL DA
EQUIPMENT
EQUIPMENT
PLUG BRK CG
PLUG BRKS
SUB PANEL D
SUB PANEL B
SUB PANEL G
SUB PANEL B
PLUG BREAKS
FILTER 1 WAY
FILTER 2 WAY
LOCAL EARTH
FILTER UNIT
1879 PRE-MOD 252981B
4174 POST-MOD 252981B
No1 GEN CONTL SW.
ON
CG-6
A20
A19
SHT 3
EA 676
DA-44
FILTER UNIT
LOCAL EARTH
DA-10
SHT 3
L.H. OVERHEAT RELAY
ECD
HGJF
LOCAL BOND
L.H. WINDSCREEN THERMAL CONTROLER
DG:C2
NORMAL SENSOR
O/HEAT SENSOR
L.H. HEATED WINDSCREEN
DA-5 A14
DA-31 A17
DA-31 B17
DA-31 B16
A16 DA-31
L.H. SCREEN HEAT SWITCH
DA-19 B4
A6 DA-19
O/HEAT 1
O/HEAT 2
L.H. TEST SW
1 D.C. POWER DISTRIBUTION (N03B)
2 EARTH CHAIN (N03C)
3 MASTER WARNING SYSTEM (N51)
4 L.H. & R.H. "B" WINDSCREEN DE-ICING (N20B)
5 ENGINE IDLE SPEED CONTROL (N63C)
6 STALL IDENT SYSTEM (N55 SHT 3)
7 TKS AIRFRAME DE-ICING (N46)
8 STALL IDENT SYSTEM (N55 SHT 2)
9 LANDING GEAR LEVER LOCK (N17)
10 L.H. & R.H. "A" WINDSCREEN DE-ICING (N20 SHT 4)
ART ID # HA00F890145AA
25-8NA5-920A SH2
DWG ISS - 2

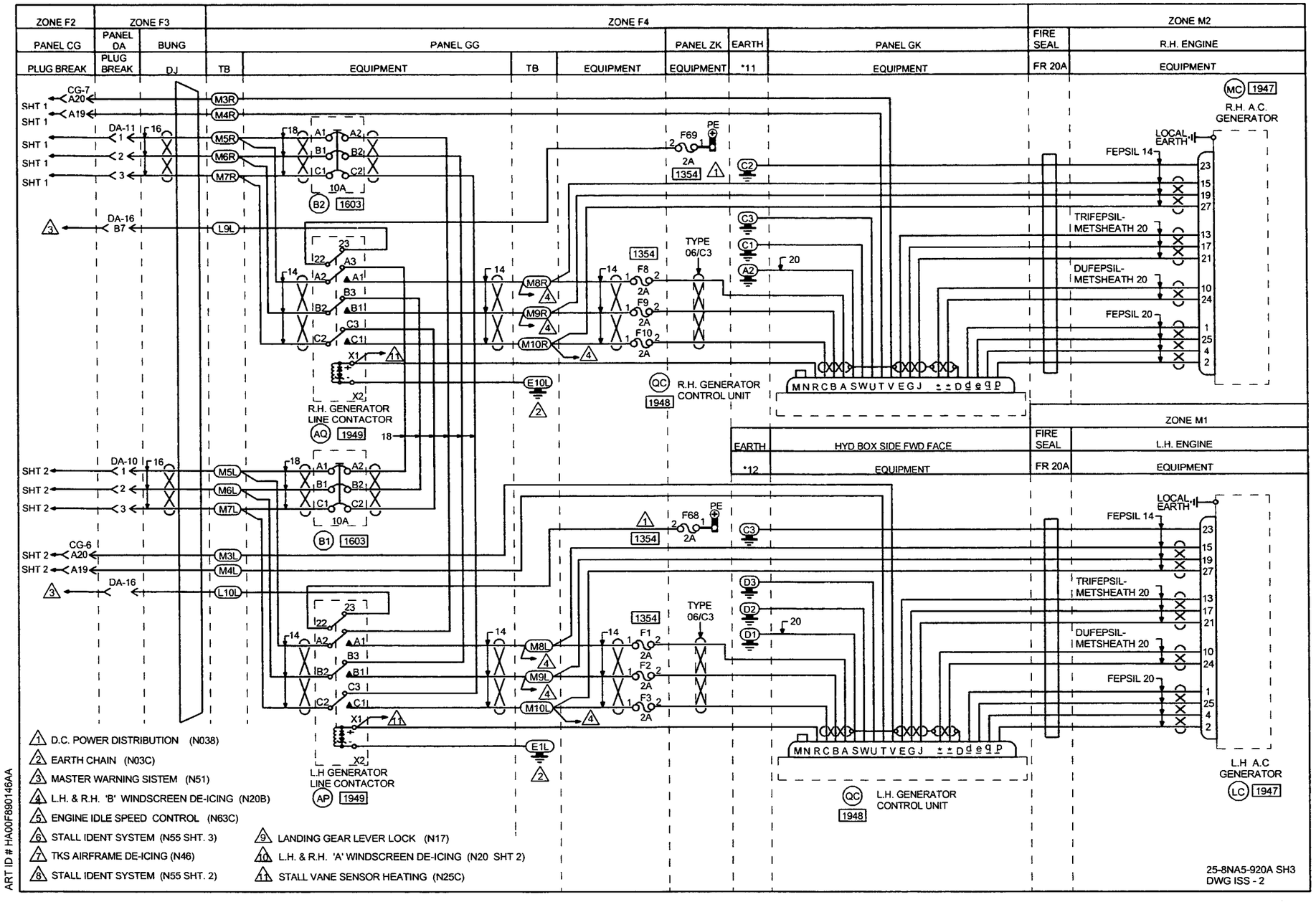
ZONE F2
ZONE F3
ZONE F4
ZONE M2
ZONE M1
PANEL CG
PANEL DA
BUNG
PANEL GG
PANEL ZK
EARTH
PANEL GK
FIRE SEAL
R.H. ENGINE
PLUG BREAK
PLUG BREAK
DJ
TB
EQUIPMENT
TB
EQUIPMENT
EQUIPMENT
*11
EQUIPMENT
FR 20A
EQUIPMENT
R.H. A.C. GENERATOR
LOCAL EARTH
FEPSIL 14
TRIFEPSIL-METSHEATH 20
DUFEPSIL-METSHEATH 20
FEPSIL 20
R.H. GENERATOR LINE CONTACTOR
R.H. GENERATOR CONTROL UNIT
EARTH
HYD BOX SIDE FWD FACE
*12
EQUIPMENT
FIRE SEAL
L.H. ENGINE
FR 20A
EQUIPMENT
L.H GENERATOR LINE CONTACTOR
L.H. GENERATOR CONTROL UNIT
L.H A.C GENERATOR
TYPE 06/C3
1 D.C. POWER DISTRIBUTION (N038)
2 EARTH CHAIN (N03C)
3 MASTER WARNING SISTEM (N51)
4 L.H. & R.H. 'B' WINDSCREEN DE-ICING (N20B)
5 ENGINE IDLE SPEED CONTROL (N63C)
6 STALL IDENT SYSTEM (N55 SHT. 3)
7 TKS AIRFRAME DE-ICING (N46)
8 STALL IDENT SYSTEM (N55 SHT. 2)
9 LANDING GEAR LEVER LOCK (N17)
10 L.H. & R.H. 'A' WINDSCREEN DE-ICING (N20 SHT 2)
11 STALL VANE SENSOR HEATING (N25C)
25-8NA5-920A SH3
DWG ISS - 2
ART ID # HA00F890146AA

ZONE F3

PANEL DA

SUB PANEL B

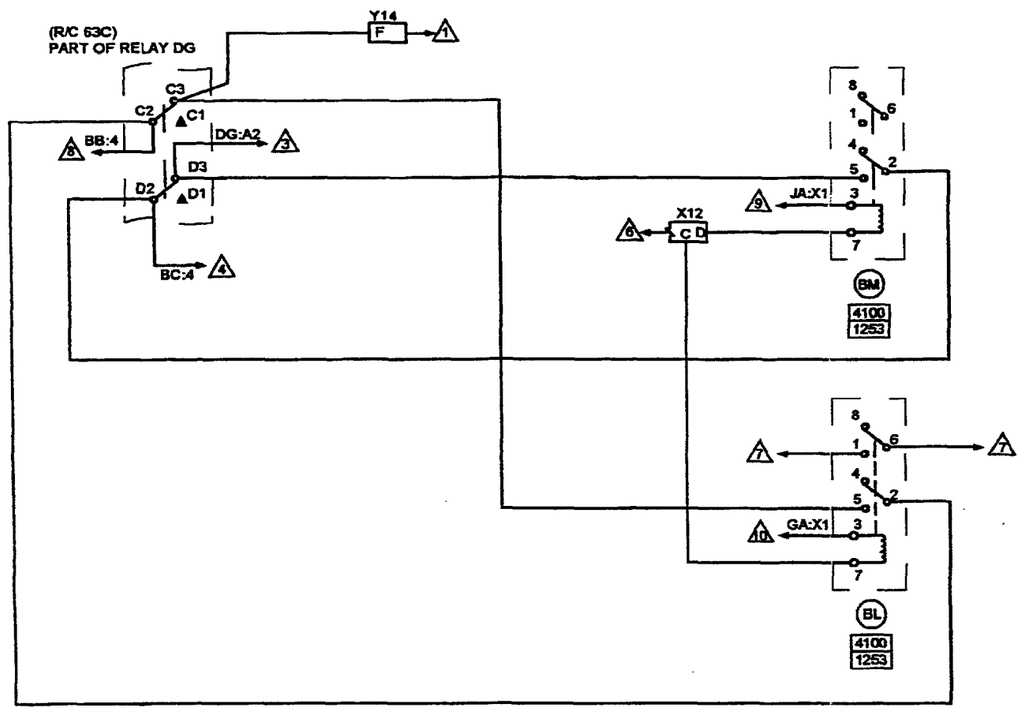

1. LANDING GEAR LEVER LOCK (N17)
2. STALL IDENT SYSTEM (N55 SHT. 5)
3. ENGINE IDLE SPEED CONTROL (N63C)
4. L.H. & R.H. 'A' WINDSCREEN DE-ICING (N20 SHT.1)
5. T.K.S. AIRFRAME DE-ICING (N46)
6. EARTH CHAIN (N03C)
7. ANGLE OF ATTACK (IF FITTED) (N81)
8. L.H. & R.H. 'A' WINDSCREEN DE-ICING (N20 SHT.2)
9. STALL IDENT SYSTEM (N55 SHT. 6)
10. STALL IDENT SYSTEM (N55 SHT. 4)

25-8NA5-920A SH4
DWG ISS-1

ART ID # HA00FB90147AA

IDENT	PART NUMBER	1234567 NOMENCLATURE	EFFECT FROM TO	UNITS PER ASSY
		LH AND RH A WINDSCREEN DE-ICING	152220	
	25-8NA5-920A	WIRING DIAGRAM- (MODIFIED BY SB24-285-253273A) (MODIFIED BY SB30-052-253261B) (MOD 253261A)		RF
A-DAG	HC921H0467-000	.FILTER UNIT-		1
AP-GG	HA5N	.CONTACTOR- (VK6265)		1
AQ-GG	HA5N	.CONTACTOR- (VK6265)		1
B-DAG	HC921H0467-000	.FILTER UNIT		1
BB-DAB	HDD45F2H06	.RELAY- (VK1793) (USED WITH BASE: 418539)		1
BC-DAB	HDD45F2H06	.RELAY- (VK1793) (USED WITH BASE: 418539)		1
BL-DAB	HDS8SF3J03	.RELAY- (VK1793) (USED WITH SOCKET: RSE120074 (V58982))		1
BM-DAB	HDS8SF3J03	.RELAY- (VK1793) (USED WITH SOCKET: RSE120074 (V58982))		1
B1-DAB	7MC1-201-10	.CIRCUIT BREAKER- (VK0142)		1
B1-GG	583-96TCK14-10A	.CIRCUIT BREAKER-10AMP (VU0091)		1
B2-DAB	7MC1-201-10	.CIRCUIT BREAKER- (VK0142)		1
B2-GG	583-96TCK14-10A	.CIRCUIT BREAKER-10AMP (VU0091)		1
B3-DAB	7MC1-201-10	.CIRCUIT BREAKER- (VK0142)		1
B4-DAB	7MC1-201-10	.CIRCUIT BREAKER- (VK0142)		1
B46-DAD	483TCG11J25-2A	.CIRCUIT BREAKER-2AMP (VU0091)		1
B5-DAB	7MC1-201-10	.CIRCUIT BREAKER- (VK0142)		1
B56-DAD	483TCG11J25-2A	.CIRCUIT BREAKER-2AMP (VU0091)		1
		MISSING ITEM NO. NOT APPLICABLE		

– ITEM NOT ILLUSTRATED

IDENT	PART NUMBER	1234567 NOMENCLATURE	EFFECT FROM TO	UNITS PER ASSY
B6-DAB	7MC1-201-10	.CIRCUIT BREAKER- (VK0142)		1
C-DAG	652-2W	.RELAY- (V10639)		1
CG6-P	MTC100YH2-009	.SHELL-PLUG (VK1010) (USED WITH WAFERS: TYPE A, MTC100KT2-1101 TYPE B, MTC100KT2-1102)		1
CG6-R	MTC100YH2-010	.SHELL-RECEPTACLE (VK1010) (USED WITH WAFERS: TYPE A, MTC100KT2-1103 TYPE B, MTC100KT2-1104)		1
CG7-P	MTC100YH2-009	.SHELL-PLUG (VK1010) (USED WITH WAFERS: TYPE A, MTC100KT2-1101 TYPE B, MTC100KT2-1102)		1
CG7-R	MTC100YH2-010	.SHELL-RECEPTACLE (VK1010) (USED WITH WAFERS: TYPE A, MTC100KT2-1103 TYPE B, MTC100KT2-1104)		1
D-DAG	652-2W	.RELAY- (V10639)		1
DA10-P	MTCR161-04P	.CONNECTOR-PIN (VK1010)		1
DA10-R	MTCR101-04S	.CONNECTOR-SOCKET (VK1010)		1
DA11-P	MTCR161-04P	.CONNECTOR-PIN (VK1010)		1
DA11-R	MTCR101-04S	.CONNECTOR-SOCKET (VK1010)		1
DA16-P	MTC100YH1-003	.SHELL-PLUG (VK1010) (USED WITH WAFERS: TYPE A, MTC100KT1-1101 TYPE B, MTC100KT1-1102)		1
DA16-R	MTC100YH1-004	.SHELL-RECEPTACLE (VK1010) (USED WITH WAFERS: TYPE A, MTC100KT1-1103 TYPE B, MTC100KT1-1104)		1
DA19-P	MTC100YH2-009	.SHELL-PLUG (VK1010) (USED WITH WAFERS: TYPE A, MTC100KT2-1101 TYPE B, MTC100KT2-1102)		1
		MISSING ITEM NO. NOT APPLICABLE		

- ITEM NOT ILLUSTRATED

IDENT	PART NUMBER	1234567 NOMENCLATURE	EFFECT FROM TO	UNITS PER ASSY
DA19-R	MTC100YH2-010	.SHELL-RECEPTACLE (VK1010) (USED WITH WAFERS: TYPE A, MTC100KT2-1103 TYPE B, MTC100KT2-1104)		1
DA20-P	MTC100YH2-009	.SHELL-PLUG (VK1010) (USED WITH WAFERS: TYPE A, MTC100KT2-1101 TYPE B, MTC100KT2-1102)		1
DA20-R	MTC100YH2-010	.SHELL-RECEPTACLE (VK1010) (USED WITH WAFERS: TYPE A, MTC100KT2-1103 TYPE B, MTC100KT2-1104)		1
DA31-P	MTC100YH2-009	.SHELL-PLUG (VK1010) (USED WITH WAFERS: TYPE A, MTC100KT2-1101 TYPE B, MTC100KT2-1102)		1
DA31-R	MTC100YH2-010	.SHELL-RECEPTACLE (VK1010) (USED WITH WAFERS: TYPE A, MTC100KT2-1103 TYPE B, MTC100KT2-1104)		1
DA35-P	MTC100YH2-009	.SHELL-PLUG (VK1010) (USED WITH WAFERS: TYPE A, MTC100KT2-1101 TYPE B, MTC100KT2-1102)		1
DA35-R	MTC100YH2-010	.SHELL-RECEPTACLE (VK1010) (USED WITH WAFERS: TYPE A, MTC100KT2-1103 TYPE B, MTC100KT2-1104)		1
DA44-P	MTCR161-04P	.CONNECTOR-PIN (VK1010)		1
DA44-R	MTCR101-04S	.CONNECTOR-SOCKET (VK1010)		1
DA45-P	MTCR161-04P	.CONNECTOR-PIN (VK1010)		1
DA45-R	MTCR101-04S	.CONNECTOR-SOCKET (VK1010)		1
DA5-P	MTC100YH2-009	.SHELL-PLUG (VK1010) (USED WITH WAFERS: TYPE A, MTC100KT2-1101 TYPE B, MTC100KT2-1102)		1
		MISSING ITEM NO. NOT APPLICABLE		

– ITEM NOT ILLUSTRATED

IDENT	PART NUMBER	1234567 NOMENCLATURE	EFFECT FROM TO	UNITS PER ASSY
DA5-R	MTC100YH2-010	.SHELL-RECEPTACLE (VK1010) (USED WITH WAFERS: TYPE A, MTC100KT2-1103 TYPE B, MTC100KT2-1104)		1
DA6-P	MTC100YH2-009	.SHELL-PLUG (VK1010) (USED WITH WAFERS: TYPE A, MTC100KT2-1101 TYPE B, MTC100KT2-1102)		1
DA6-R	MTC100YH2-010	.SHELL-RECEPTACLE (VK1010) (USED WITH WAFERS: TYPE A, MTC100KT2-1103 TYPE B, MTC100KT2-1104)		1
DG-DAB	M400-1265	.RELAY- (VK6265) (USED WITH SOCKET: M12883-40-19 (V81349))		1
DJ	422255-7	.BUNG- (VK1793)		1
E-DAG	652-2W	.RELAY- (V10639)		1
E-GG	HWBUN1146D10B	.TERMINAL BLOCK- (VK0574)		1
EA-CG	1TP1-3M	.SWITCH- (V91929)		1
EB-CG	2TP1-3M	.SWITCH- (V91929)		1
EC-CG	1TP1-3M	.SWITCH- (V91929)		1
ED-CG	2TP1-3M	.SWITCH- (V91929)		1
F-DAB	2TL1-7	.SWITCH- (V58960) (USED WITH RESISTOR: MR5-680RPM1PCT (VK0064) (OPT TR5-680R (VK4184)))		1
F-DAG	652-2W	.RELAY- (V10639)		1
FA-DAB	M500-1383	.RELAY- (VK6265) (USED WITH SOCKET: M12883-48-02 (V81349))		1
		MISSING ITEM NO. NOT APPLICABLE		

– ITEM NOT ILLUSTRATED

IDENT	PART NUMBER	1234567 NOMENCLATURE	EFFECT FROM TO	UNITS PER ASSY
FC-DAB	M500-1383	.RELAY- (VK6265) (USED WITH SOCKET: M12883-48-02 (V81349))		1
F1-GG	5920-99-0120074	.FUSE-2AMP (VK0657)		1
F10-GG	5920-99-0120074	.FUSE-2AMP (VK0657)		1
F2-GG	5920-99-0120074	.FUSE-2AMP (VK0657)		1
F3-GG	5920-99-0120074	.FUSE-2AMP (VK0657)		1
F68-ZK	5920-99-0120074	.FUSE-2AMP (VK0657)		1
F69-ZK	5920-99-0120074	.FUSE-2AMP (VK0657)		1
F8-GG	5920-99-0120074	.FUSE-2AMP (VK0657)		1
F9-GG	5920-99-0120074	.FUSE-2AMP (VK0657)		1
G-DAB	2TL1-7	.SWITCH- (V58960) (USED WITH RESISTOR: MR5-680RPM1PCT (VK0064) (OPT TR5-680R (VK4184)))		1
G-DAG	652-2W	.RELAY- (V10639)		1
H-DAG	652-2W	.RELAY- (V10639)		1
JL-DAG	MFR5-2K4PM1PCT	.RESISTOR-2K4 (VK0064)		1
K-DAG	ND0075-2011	.CONTROLLER-MK22 (VK0672)		1
L-DAG	ND0075-2011	.CONTROLLER-MK22 (VK0672)		1
L-GG	HWBUN1146D10B	.TERMINAL BLOCK- (VK0574)		1
LC	BA02801-1	.GENERATOR- (VK4358)		1
M-GG	HWBUN1146D10B	.TERMINAL BLOCK- (VK0574)		1
MC	BA02801-1	.GENERATOR- (VK4358)		1
R M1-DAG	M81714-2DA1	.JUNCTION BLOCK- (V81349)		1
R M2-DAG	M81714-2DA1	.JUNCTION BLOCK- (V81349)		1
		MISSING ITEM NO. NOT APPLICABLE		

– ITEM NOT ILLUSTRATED

	IDENT	PART NUMBER	1234567 NOMENCLATURE	EFFECT FROM TO	UNITS PER ASSY
R	M3-DAG	M81714-2DB1	.JUNCTION BLOCK- (V81349)		1
R	M4-DAG	MRTB20E09-111	.TERMINAL JUNCTION MODULE- (V14283)		1
	M5-DAG	MRTB20E57-111	.TERMINAL JUNCTION MODULE- (V14283)		1
	M7-DAG	MRTB20E57-111	.TERMINAL JUNCTION MODULE- (V14283)		1
	M9-DAG	MRTB20E09-111	.TERMINAL JUNCTION MODULE- (V14283)		1
	P-DAG	MFR4-270RPM1PCT	.RESISTOR-270R (VK0064)		1
	Q-DAG	MFR4-270RPM1PCT	.RESISTOR-270R (VK0064)		1
	QC-GK	CB02701	.CONTROL UNIT- (VK4358)		1
	QD	CB02701	.CONTROL UNIT- (VK4358)		1
	RE	NF24016-157	.WINDSCREEN-HEATED,LH (VK0672)		1
	RG	NF24016-158	.WINDSCREEN-HEATED,RH (VK0672)		1
	T-DAB	MFR4-270RPM1PCT	.RESISTOR-270R (VK0064)		1
	U-DAB	MFR4-270RPM1PCT	.RESISTOR-270R (VK0064)		1
	V-DAB	MFR5-2K4PM1PCT	.RESISTOR-2K4 (VK0064)		1
	VU	25-8NF2065-1A	.FILTER		1
	VV	25-8NF2061-1A	.FILTER BOARD		1
	VY	25-8NF2065-1A	.FILTER		1
	VZ	25-8NF2061-1A	.FILTER BOARD		1
	WG	ND0075-1875	.FILTER UNIT- (VK0672)		1
	WH	ND0075-1875	.FILTER UNIT- (VK0672)		1
R	X12-DAB	M81714-2DA1	.JUNCTION BLOCK- (V81349)		1
R	Y1-DAB	M81714-2DA1	.JUNCTION BLOCK- (V14283)		1
R	Y14-DAB	M81714-2DA1	.JUNCTION BLOCK- (V81349)		1

MISSING ITEM NO. NOT APPLICABLE

– ITEM NOT ILLUSTRATED

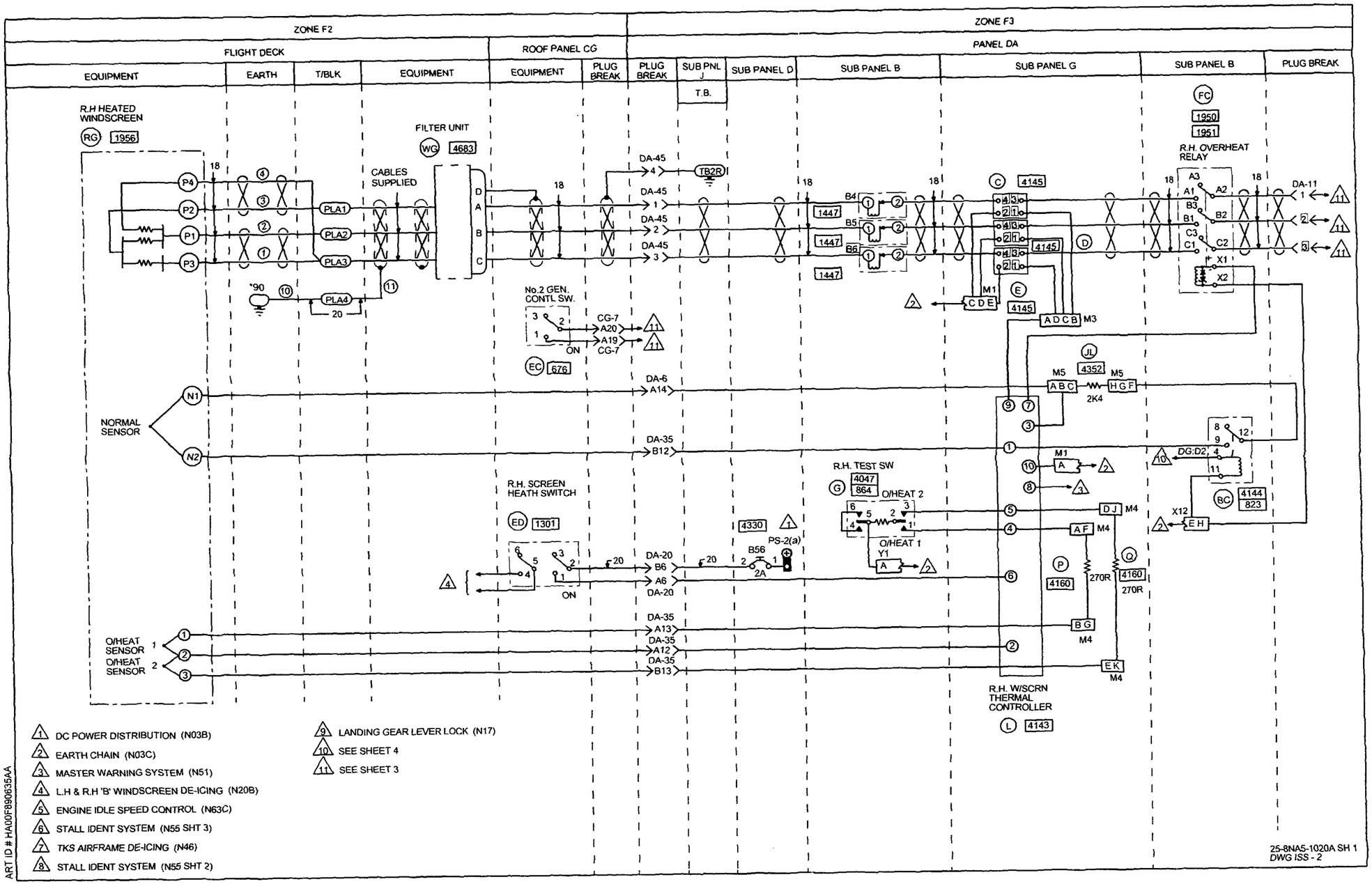
ZONE F2
ZONE F3
FLIGHT DECK
ROOF PANEL CG
PANEL DA
EQUIPMENT
EARTH
T/BLK
EQUIPMENT
EQUIPMENT
PLUG BREAK
PLUG BREAK
SUB PNL J
T.B.
SUB PANEL D
SUB PANEL B
SUB PANEL G
SUB PANEL B
PLUG BREAK
R.H HEATED WINDSCREEN
RG 1956
FILTER UNIT
WG 4683
CABLES SUPPLIED
PLA1
PLA2
PLA3
PLA4
*90
No.2 GEN. CONTL SW.
ON
EC 676
CG-7
A20
A19
DA-45
TB2R
DA-6
A14
DA-35
B12
NORMAL SENSOR
N1
N2
R.H. SCREEN HEATH SWITCH
ED 1301
DA-20
B6
A6
4330
PS-2(a)
B56
2A
R.H. TEST SW
G 4047 864
O/HEAT 2
O/HEAT 1
Y1
1447
B4
B5
B6
C 4145
D 4145
E 4145
CDE
ADCB M3
M1
JL 4352
M5
ABC
HGF
2K4
DJ M4
AF M4
P 4160
Q 4160
270R
BG M4
EK M4
R.H. W/SCRN THERMAL CONTROLLER
L 4143
FC 1950 1951
R.H. OVERHEAT RELAY
A3
A1
A2
B3
B1
B2
C3
C1
C2
X1
X2
DA-11
DG:D2
BC 4144 823
X12
EH
O/HEAT SENSOR 1
O/HEAT SENSOR 2
DA-35
A13
A12
B13
1 DC POWER DISTRIBUTION (N03B)
2 EARTH CHAIN (N03C)
3 MASTER WARNING SYSTEM (N51)
4 L.H & R.H 'B' WINDSCREEN DE-ICING (N20B)
5 ENGINE IDLE SPEED CONTROL (N63C)
6 STALL IDENT SYSTEM (N55 SHT 3)
7 TKS AIRFRAME DE-ICING (N46)
8 STALL IDENT SYSTEM (N55 SHT 2)
9 LANDING GEAR LEVER LOCK (N17)
10 SEE SHEET 4
11 SEE SHEET 3
ART ID # HA00F890635AA
25-8NA5-1020A SH 1
DWG ISS - 2

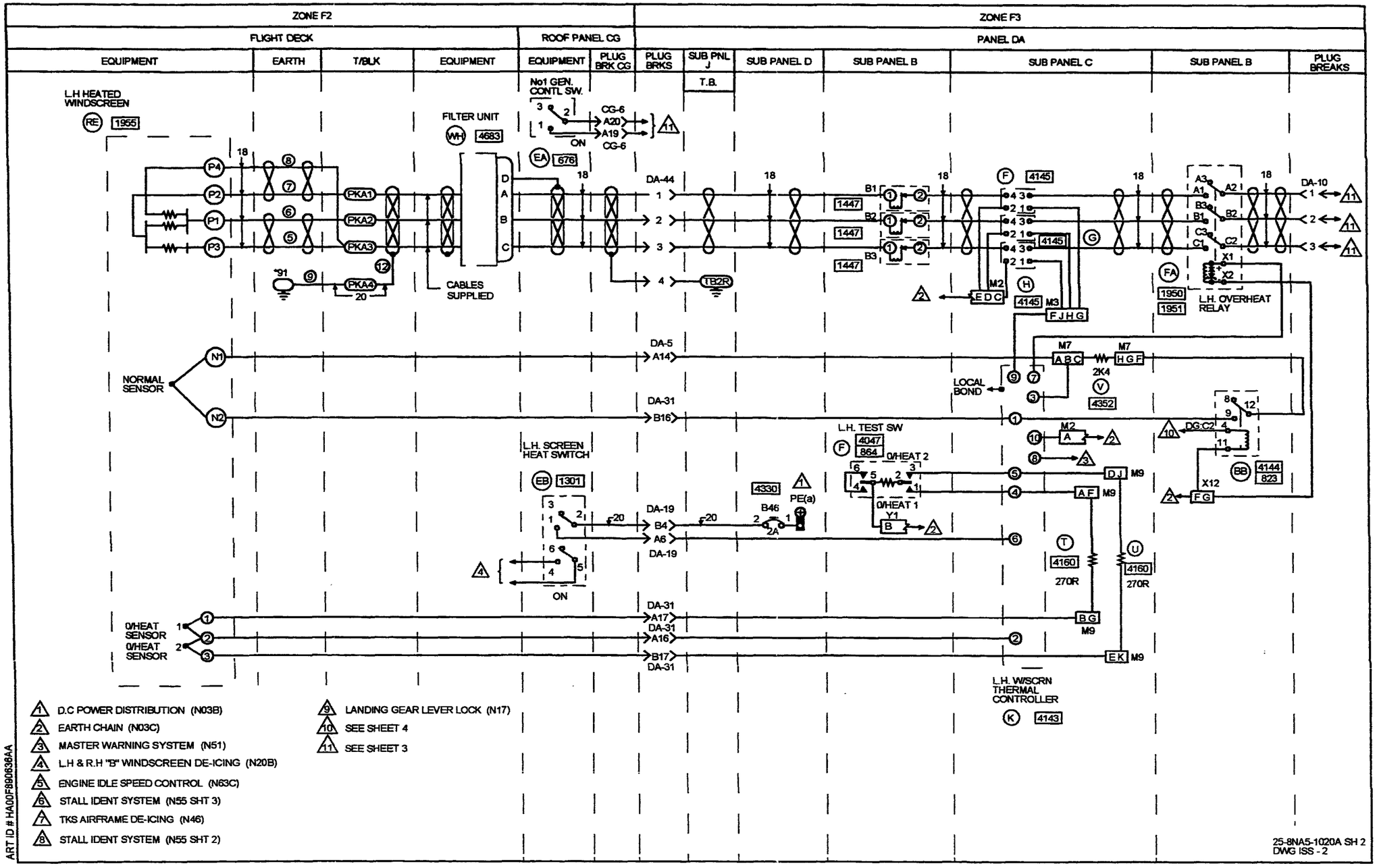
ZONE F2
ZONE F3
FLIGHT DECK
ROOF PANEL CG
PANEL DA
EQUIPMENT
EARTH
T/BLK
EQUIPMENT
EQUIPMENT
PLUG BRK CG
PLUG BRKS
SUB PNL J
T.B.
SUB PANEL D
SUB PANEL B
SUB PANEL C
SUB PANEL B
PLUG BREAKS
L.H HEATED WINDSCREEN
RE 1955
FILTER UNIT
WH 4683
CABLES SUPPLIED
No1 GEN. CONTL SW.
CG-6
A20
A19
ON
EA 676
DA-44
DA-10
L.H. OVERHEAT RELAY
1950
1951
NORMAL SENSOR
DA-5
A14
DA-31
B16
LOCAL BOND
2K4
4352
L.H. TEST SW
4047
864
O/HEAT 2
O/HEAT 1
L.H. SCREEN HEAT SWITCH
EB 1301
DA-19
B4
A6
4330
PE(a)
B46
2A
ON
O/HEAT SENSOR
O/HEAT SENSOR
DA-31
A17
A16
B17
4160
270R
L.H. W/SCRN THERMAL CONTROLLER
K 4143
1 D.C POWER DISTRIBUTION (N03B)
2 EARTH CHAIN (N03C)
3 MASTER WARNING SYSTEM (N51)
4 L.H & R.H "B" WINDSCREEN DE-ICING (N20B)
5 ENGINE IDLE SPEED CONTROL (N63C)
6 STALL IDENT SYSTEM (N55 SHT 3)
7 TKS AIRFRAME DE-ICING (N46)
8 STALL IDENT SYSTEM (N55 SHT 2)
9 LANDING GEAR LEVER LOCK (N17)
10 SEE SHEET 4
11 SEE SHEET 3
ART ID # HA00F8B0636AA
25-8NA5-1020A SH 2
DWG ISS - 2

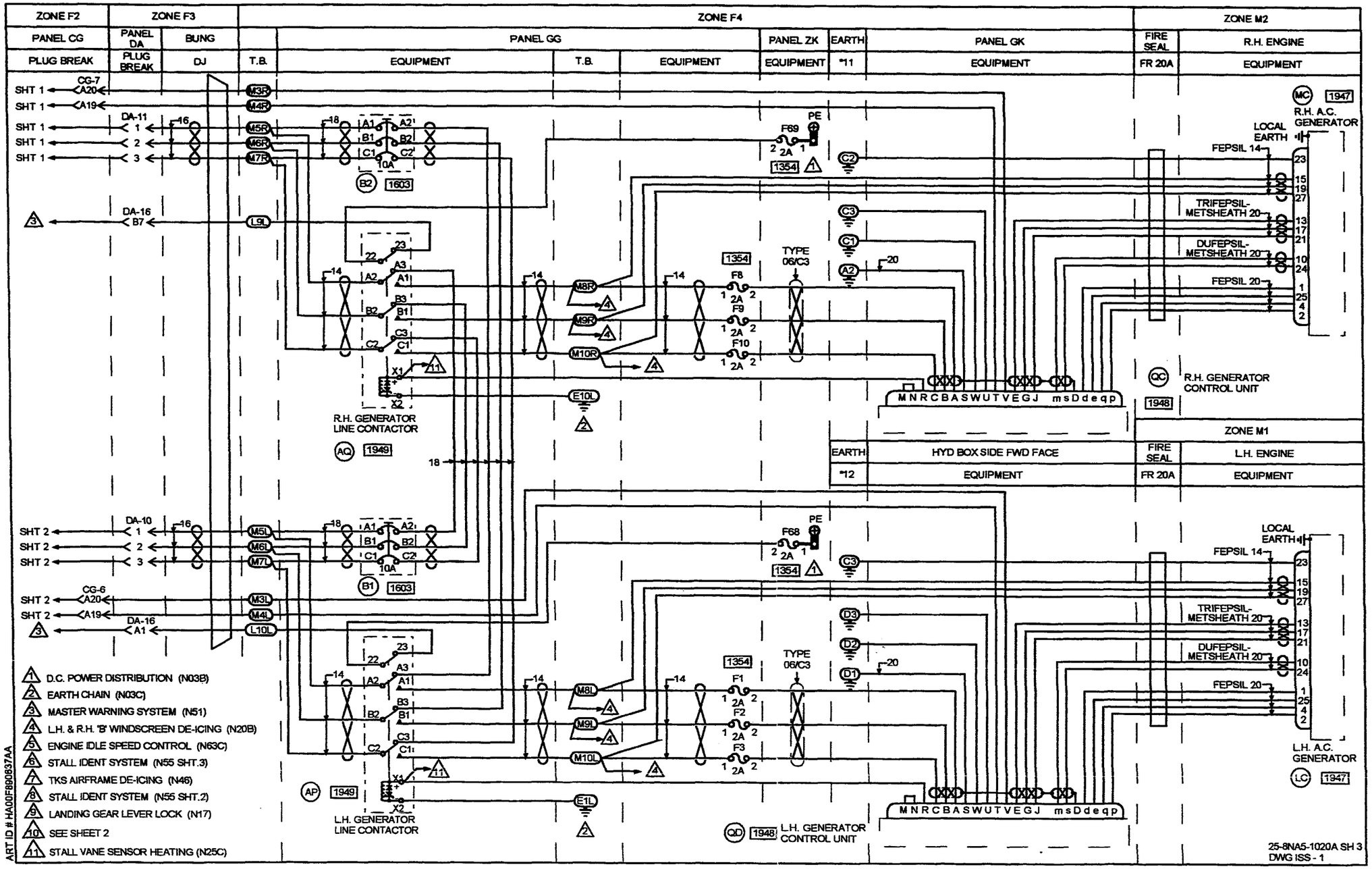
ZONE F2
ZONE F3
ZONE F4
ZONE M2
ZONE M1
PANEL CG
PLUG BREAK
PANEL DA
PLUG BREAK
BUNG
DJ
T.B.
PANEL GG
EQUIPMENT
T.B.
EQUIPMENT
PANEL ZK
EQUIPMENT
EARTH
*11
PANEL GK
EQUIPMENT
FIRE SEAL
FR 20A
R.H. ENGINE
EQUIPMENT
EARTH
*12
HYD BOX SIDE FWD FACE
EQUIPMENT
FIRE SEAL
FR 20A
L.H. ENGINE
EQUIPMENT
R.H. A.C. GENERATOR
LOCAL EARTH
FEPSIL 14
TRIFEPSIL-METSHEATH 20
DUFEPSIL-METSHEATH 20
FEPSIL 20
R.H. GENERATOR CONTROL UNIT
R.H. GENERATOR LINE CONTACTOR
L.H. GENERATOR LINE CONTACTOR
L.H. GENERATOR CONTROL UNIT
L.H. A.C. GENERATOR
TYPE 06/C3
1. D.C. POWER DISTRIBUTION (N03B)
2. EARTH CHAIN (N03C)
3. MASTER WARNING SYSTEM (N51)
4. L.H. & R.H. 'B' WINDSCREEN DE-ICING (N20B)
5. ENGINE IDLE SPEED CONTROL (N63C)
6. STALL IDENT SYSTEM (N55 SHT.3)
7. TKS AIRFRAME DE-ICING (N46)
8. STALL IDENT SYSTEM (N55 SHT.2)
9. LANDING GEAR LEVER LOCK (N17)
10. SEE SHEET 2
11. STALL VANE SENSOR HEATING (N25C)
ART ID # HA00F890837AA
25-8NA5-1020A SH 3
DWG ISS - 1

ZONE F3

PANEL DA

SUB PANEL B

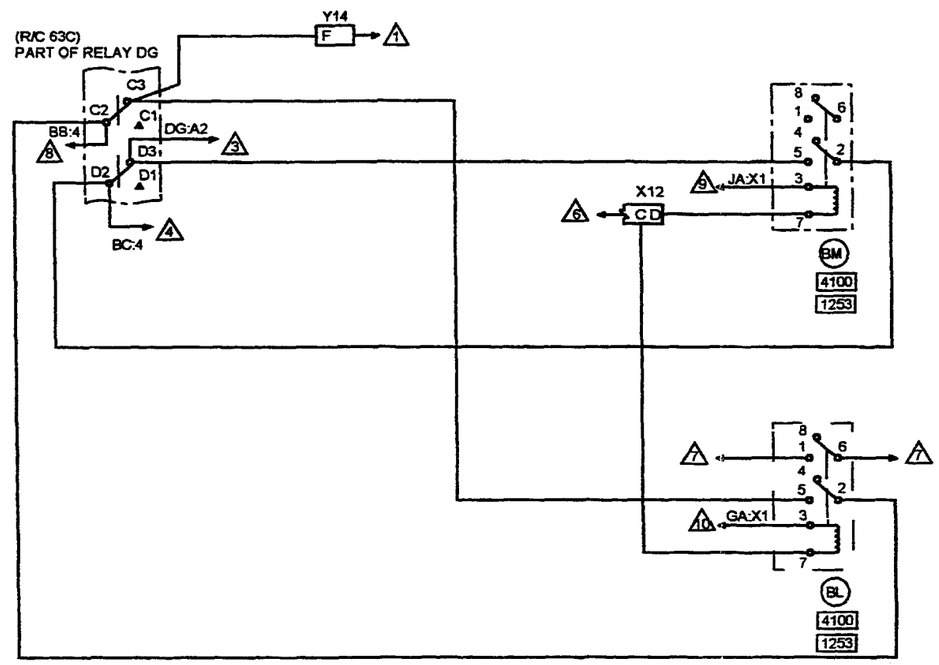

1. LANDING GEAR LEVER LOCK (N17)
3. ENGINE IDLE SPEED CONTROL (N63C)
4. L.H. & R.H. "A" WINDSCREEN DE-ICING (N20 SHT.1)
6. EARTH CHAIN (N03C)
7. ANGLE OF ATTACK (IF FITTED) (N81)
8. LH & RH "A" WINDSCREEN DE-ICING (N20 SHT.2)
9. STALL IDENT SYSTEM (N55 SHT.6)
10. STALL IDENT SYSTEM (N55 SHT.4)

ART ID # HA00F89063BAA

25-8NA5-1020A SH 4
DWG ISS - 1

IDENT	PART NUMBER	1234567 NOMENCLATURE	EFFECT FROM TO	UNITS PER ASSY
		LH AND RH A WINDSCREEN DE-ICING	221264	
	25-8NA5-1020A	WIRING DIAGRAM- (MOD 253261A)		RF
AP-GG	HA5N	.CONTACTOR- (VK6265)		1
AQ-GG	HA5N	.CONTACTOR- (VK6265)		1
BB-DAB	HDD45F2H06	.RELAY- (VK1793) (USED WITH BASE: 418539)		1
BC-DAB	HDD45F2H06	.RELAY- (VK1793) (USED WITH BASE: 418539)		1
BL-DAB	HDS8SF3J03	.RELAY- (VK1793) (USED WITH SOCKET: RSE120074 (V58982))		1
BM-DAB	HDS8SF3J03	.RELAY- (VK1793) (USED WITH SOCKET: RSE120074 (V58982))		1
B1-DAB	7MC1-201-10	.CIRCUIT BREAKER- (VK0142)		1
B1-GG	583-96TCK14-10A	.CIRCUIT BREAKER-10AMP (VU0091)		1
B2-DAB	7MC1-201-10	.CIRCUIT BREAKER- (VK0142)		1
B2-GG	583-96TCK14-10A	.CIRCUIT BREAKER-10AMP (VU0091)		1
B3-DAB	7MC1-201-10	.CIRCUIT BREAKER- (VK0142)		1
B4-DAB	7MC1-201-10	.CIRCUIT BREAKER- (VK0142)		1
B46-DAD	483TCG11J25-2A	.CIRCUIT BREAKER-2AMP (VU0091)		1
B5-DAB	7MC1-201-10	.CIRCUIT BREAKER- (VK0142)		1
B56-DAD	483TCG11J25-2A	.CIRCUIT BREAKER-2AMP (VU0091)		1
B6-DAB	7MC1-201-10	.CIRCUIT BREAKER- (VK0142)		1
C-DAG	652-2W	.RELAY- (V10639)		1
		MISSING ITEM NO. NOT APPLICABLE		

– ITEM NOT ILLUSTRATED

IDENT	PART NUMBER	1234567 NOMENCLATURE	EFFECT FROM TO	UNITS PER ASSY
CG6-P	MTC100YH2-009	.SHELL-PLUG (VK1010) (USED WITH WAFERS: TYPE A, MTC100KT2-1101 TYPE B, MTC100KT2-1102)	221254	1
CG6-P	MTC100YH2-009	.SHELL-PLUG (VK1010) (USED WITH INSERTS: PRIMARY MTC100YC1-001 SECONDARY MTC100YC1-002)	255264	1
CG6-R	MTC100YH2-010	.SHELL-RECEPTACLE (VK1010) (USED WITH WAFERS: TYPE A, MTC100KT2-1103 TYPE B, MTC100KT2-1104)	221254	1
CG6-R	MTC100YH2-010	.SHELL-RECEPTACLE (VK1010) (USED WITH INSERTS: PRIMARY MTC100YC1-003 SECONDARY MTC100YC1-004)	255264	1
CG7-P	MTC100YH2-009	.SHELL-PLUG (VK1010) (USED WITH WAFERS: TYPE A, MTC100KT2-1101 TYPE B, MTC100KT2-1102)	221254	1
CG7-P	MTC100YH2-009	.SHELL-PLUG (VK1010) (USED WITH INSERTS: PRIMARY MTC100YC1-001 SECONDARY MTC100YC1-002)	255264	1
CG7-R	MTC100YH2-010	.SHELL-RECEPTACLE (VK1010) (USED WITH WAFERS: TYPE A, MTC100KT2-1103 TYPE B, MTC100KT2-1104)	221254	1
CG7-R	MTC100YH2-010	.SHELL-RECEPTACLE (VK1010) (USED WITH INSERTS: PRIMARY MTC100YC1-003 SECONDARY MTC100YC1-004)	255264	1
D-DAG	652-2W	.RELAY- (V10639)		1
DA10-P	MTCR161-04P	.CONNECTOR-PIN (VK1010)		1
DA10-R	MTCR101-04S	.CONNECTOR-SOCKET (VK1010)		1
DA11-P	MTCR161-04P	.CONNECTOR-PIN (VK1010)		1
DA11-R	MTCR101-04S	.CONNECTOR-SOCKET (VK1010)		1
		MISSING ITEM NO. NOT APPLICABLE		

– ITEM NOT ILLUSTRATED

IDENT	PART NUMBER	1234567 NOMENCLATURE	EFFECT FROM TO	UNITS PER ASSY
DA16-P	MTC100YH1-003	.SHELL-PLUG (VK1010) (USED WITH WAFERS: TYPE A, MTC100KT1-1101 TYPE B, MTC100KT1-1102)	221254	1
DA16-P	MTC100YH1-003	.SHELL-PLUG (VK1010) (USED WITH INSERT: MTC100YC1-005)	255264	1
DA16-R	MTC100YH1-004	.SHELL-RECEPTACLE (VK1010) (USED WITH WAFERS: TYPE A, MTC100KT1-1103 TYPE B, MTC100KT1-1104)	221254	1
DA16-R	MTC100YH1-004	.SHELL-RECEPTACLE (VK1010) (USED WITH INSERT: MTC100YC1-006)	255264	1
DA19-P	MTC100YH2-009	.SHELL-PLUG (VK1010) (USED WITH WAFERS: TYPE A, MTC100KT2-1101 TYPE B, MTC100KT2-1102)	221254	1
DA19-P	MTC100YH2-009	.SHELL-PLUG (VK1010) (USED WITH INSERTS: PRIMARY MTC100YC1-001 SECONDARY MTC100YC1-002)	255264	1
DA19-R	MTC100YH2-010	.SHELL-RECEPTACLE (VK1010) (USED WITH WAFERS: TYPE A, MTC100KT2-1103 TYPE B, MTC100KT2-1104)	221254	1
DA19-R	MTC100YH2-010	.SHELL-RECEPTACLE (VK1010) (USED WITH INSERTS: PRIMARY MTC100YC1-003 SECONDARY MTC100YC1-004)	255264	1
DA20-P	MTC100YH2-009	.SHELL-PLUG (VK1010) (USED WITH WAFERS: TYPE A, MTC100KT2-1101 TYPE B, MTC100KT2-1102)	221254	1
DA20-P	MTC100YH2-009	.SHELL-PLUG (VK1010) (USED WITH INSERTS: PRIMARY MTC100YC1-001 SECONDARY MTC100YC1-002)	255264	1
		MISSING ITEM NO. NOT APPLICABLE		

– ITEM NOT ILLUSTRATED

IDENT	PART NUMBER	1234567 NOMENCLATURE	EFFECT FROM TO	UNITS PER ASSY
DA20-R	MTC100YH2-010	.SHELL-RECEPTACLE (VK1010) (USED WITH WAFERS: TYPE A, MTC100KT2-1103 TYPE B, MTC100KT2-1104)	221254	1
DA20-R	MTC100YH2-010	.SHELL-RECEPTACLE (VK1010) (USED WITH INSERTS: PRIMARY MTC100YC1-003 SECONDARY MTC100YC1-004)	255264	1
DA31-P	MTC100YH2-009	.SHELL-PLUG (VK1010) (USED WITH WAFERS: TYPE A, MTC100KT2-1101 TYPE B, MTC100KT2-1102)	221254	1
DA31-P	MTC100YH2-009	.SHELL-PLUG (VK1010) (USED WITH INSERTS: PRIMARY MTC100YC1-001 SECONDARY MTC100YC1-002)	255264	1
DA31-R	MTC100YH2-010	.SHELL-RECEPTACLE (VK1010) (USED WITH WAFERS: TYPE A, MTC100KT2-1103 TYPE B, MTC100KT2-1104)	221254	1
DA31-R	MTC100YH2-010	.SHELL-RECEPTACLE (VK1010) (USED WITH INSERTS: PRIMARY MTC100YC1-003 SECONDARY MTC100YC1-004)	255264	1
DA35-P	MTC100YH2-009	.SHELL-PLUG (VK1010) (USED WITH WAFERS: TYPE A, MTC100KT2-1101 TYPE B, MTC100KT2-1102)	221254	1
DA35-P	MTC100YH2-009	.SHELL-PLUG (VK1010) (USED WITH INSERTS: PRIMARY MTC100YC1-001 SECONDARY MTC100YC1-002)	255264	1
DA35-R	MTC100YH2-010	.SHELL-RECEPTACLE (VK1010) (USED WITH WAFERS: TYPE A, MTC100KT2-1103 TYPE B, MTC100KT2-1104)	221254	1
DA35-R	MTC100YH2-010	.SHELL-RECEPTACLE (VK1010) (USED WITH INSERTS: PRIMARY MTC100YC1-003 SECONDARY MTC100YC1-004)	255264	1
		MISSING ITEM NO. NOT APPLICABLE		

– ITEM NOT ILLUSTRATED

IDENT	PART NUMBER	1234567 NOMENCLATURE	EFFECT FROM TO	UNITS PER ASSY
DA44-P	MTCR161-04P	.CONNECTOR-PIN (VK1010)		1
DA44-R	MTCR101-04S	.CONNECTOR-SOCKET (VK1010)		1
DA45-P	MTCR161-04P	.CONNECTOR-PIN (VK1010)		1
DA45-R	MTCR101-04S	.CONNECTOR-SOCKET (VK1010)		1
DA5-P	MTC100YH2-009	.SHELL-PLUG (VK1010) (USED WITH WAFERS: TYPE A, MTC100KT2-1101 TYPE B, MTC100KT2-1102)	221254	1
DA5-P	MTC100YH2-009	.SHELL-PLUG (VK1010) (USED WITH INSERTS: PRIMARY MTC100YC1-001 SECONDARY MTC100YC1-002)	255264	1
DA5-R	MTC100YH2-010	.SHELL-RECEPTACLE (VK1010) (USED WITH WAFERS: TYPE A, MTC100KT2-1103 TYPE B, MTC100KT2-1104)	221254	1
DA5-R	MTC100YH2-010	.SHELL-RECEPTACLE (VK1010) (USED WITH INSERTS: PRIMARY MTC100YC1-003 SECONDARY MTC100YC1-004)	255264	1
DA6-P	MTC100YH2-009	.SHELL-PLUG (VK1010) (USED WITH WAFERS: TYPE A, MTC100KT2-1101 TYPE B, MTC100KT2-1102)	221254	1
DA6-P	MTC100YH2-009	.SHELL-PLUG (VK1010) (USED WITH INSERTS: PRIMARY MTC100YC1-001 SECONDARY MTC100YC1-002)	255264	1
DA6-R	MTC100YH2-010	.SHELL-RECEPTACLE (VK1010) (USED WITH WAFERS: TYPE A, MTC100KT2-1103 TYPE B, MTC100KT2-1104)	221254	1
DA6-R	MTC100YH2-010	.SHELL-RECEPTACLE (VK1010) (USED WITH INSERTS: PRIMARY MTC100YC1-003 SECONDARY MTC100YC1-004)	255264	1
		MISSING ITEM NO. NOT APPLICABLE		

– ITEM NOT ILLUSTRATED

IDENT	PART NUMBER	1234567 NOMENCLATURE	EFFECT FROM TO	UNITS PER ASSY
DG-DAB	M400-1265	.RELAY- (VK6265) (USED WITH SOCKET: M12883-40-19 (V81349))		1
DJ	422255-7	.BUNG- (VK1793)		1
E-DAG	652-2W	.RELAY- (V10639)		1
E-GG	HWBUN1146D10B	.TERMINAL BLOCK- (VK0574)		1
EA-CG	1TP1-3M	.SWITCH- (V91929)		1
EB-CG	2TP1-3M	.SWITCH- (V91929)		1
EC-CG	1TP1-3M	.SWITCH- (V91929)		1
ED-CG	2TP1-3M	.SWITCH- (V91929)		1
F-DAB	2TL1-7	.SWITCH- (V58960) (USED WITH RESISTOR: MR5-680RPM1PCT (VK0064) (OPT TR5-680R (VK4184)))		1
F-DAG	652-2W	.RELAY- (V10639)		1
FA-DAB	M500-1383	.RELAY- (VK6265) (USED WITH SOCKET: M12883-48-02 (V81349))		1
FC-DAB	M500-1383	.RELAY- (VK6265) (USED WITH SOCKET: M12883-48-02 (V81349))		1
F1-GG	5920-99-0120074	.FUSE-2AMP (VK0657)		1
F10-GG	5920-99-0120074	.FUSE-2AMP (VK0657)		1
F2-GG	5920-99-0120074	.FUSE-2AMP (VK0657)		1
F3-GG	5920-99-0120074	.FUSE-2AMP (VK0657)		1
F68-ZK	5920-99-0120074	.FUSE-2AMP (VK0657)		1
F69-ZK	5920-99-0120074	.FUSE-2AMP (VK0657)		1
		MISSING ITEM NO. NOT APPLICABLE		

– ITEM NOT ILLUSTRATED

	IDENT	PART NUMBER	1234567 NOMENCLATURE	EFFECT FROM TO	UNITS PER ASSY
	F8-GG	5920-99-0120074	.FUSE-2AMP (VK0657)		1
	F9-GG	5920-99-0120074	.FUSE-2AMP (VK0657)		1
	G-DAB	2TL1-7	.SWITCH- (V58960) (USED WITH RESISTOR: MR5-680RPM1PCT (VK0064) (OPT TR5-680R (VK4184)))		1
	G-DAG	652-2W	.RELAY- (V10639)		1
	H-DAG	652-2W	.RELAY- (V10639)		1
	JL-DAG	MFR5-2K4PM1PCT	.RESISTOR-2K4 (VK0064)		1
	K-DAG	ND0075-2011	.CONTROLLER-MK22 (VK0672)		1
	L-DAG	ND0075-2011	.CONTROLLER-MK22 (VK0672)		1
	L-GG	HWBUN1146D10B	.TERMINAL BLOCK- (VK0574)		1
	LC	BA02801-1	.GENERATOR- (VK4358)		1
	M-GG	HWBUN1146D10B	.TERMINAL BLOCK- (VK0574)		1
	MC	BA02801-1	.GENERATOR- (VK4358)		1
R	M1-DAG	M81714-2DA1	.JUNCTION BLOCK- (V81349)		1
R	M2-DAG	M81714-2DA1	.JUNCTION BLOCK- (V81349)		1
R	M3-DAG	M81714-2DB1	.JUNCTION BLOCK- (V81349)		1
	M4-DAG	MRTB20E09-111	.TERMINAL JUNCTION MODULE- (V14283)		1
	M5-DAG	MRTB20E57-111	.TERMINAL JUNCTION MODULE- (V14283)		1
	M7-DAG	MRTB20E57-111	.TERMINAL JUNCTION MODULE- (V14283)		1
	M9-DAG	MRTB20E09-111	.TERMINAL JUNCTION MODULE- (V14283)		1
	P-DAG	MFR4-270RPM1PCT	.RESISTOR-270R (VK0064)		1
	PKA	72441-225-0AV2	.TERMINAL BLOCK- (VK0574)		1
	PLA	72441-225-0AV2	.TERMINAL BLOCK- (VK0574)		1
			MISSING ITEM NO. NOT APPLICABLE		

– ITEM NOT ILLUSTRATED

	IDENT	PART NUMBER	1234567 NOMENCLATURE	EFFECT FROM TO	UNITS PER ASSY
	Q-DAG	MFR4-270RPM1PCT	.RESISTOR-270R (VK0064)		1
	QC-GK	CB02701	.CONTROL UNIT- (VK4358)		1
	QD	CB02701	.CONTROL UNIT- (VK4358)		1
	RE	NF24016-157	.WINDSCREEN-HEATED,LH (VK0672) (MOD 253181A)		1
	RG	NF24016-158	.WINDSCREEN-HEATED,RH (VK0672) (MOD 253181B)		1
	T-DAB	MFR4-270RPM1PCT	.RESISTOR-270R (VK0064)		1
	U-DAB	MFR4-270RPM1PCT	.RESISTOR-270R (VK0064)		1
	V-DAB	MFR5-2K4PM1PCT	.RESISTOR-2K4 (VK0064)		1
	WG	ND0075-2260	.FILTER UNIT- (VK0672) (USED WITH: CONNECTOR-SOCKET D38999-26FD05SN (VU0425) OUTLET GTR1054G15M (VU0419))		1
	WH	ND0075-2260	.FILTER UNIT- (VK0672) (USED WITH: CONNECTOR-SOCKET D38999-26FD05SN (VU0425) OUTLET GTR1054G15M (VU0419))		1
R R	X12-DAB	M81714-2DA1	.JUNCTION BLOCK- (V81349)		1
R R	Y1-DAB	M81714-2DA1	.JUNCTION BLOCK- (V81349)		1
R R	Y14-DAB	M81714-2DA1	.JUNCTION BLOCK- (V81349)		1
			MISSING ITEM NO. NOT APPLICABLE		

– ITEM NOT ILLUSTRATED

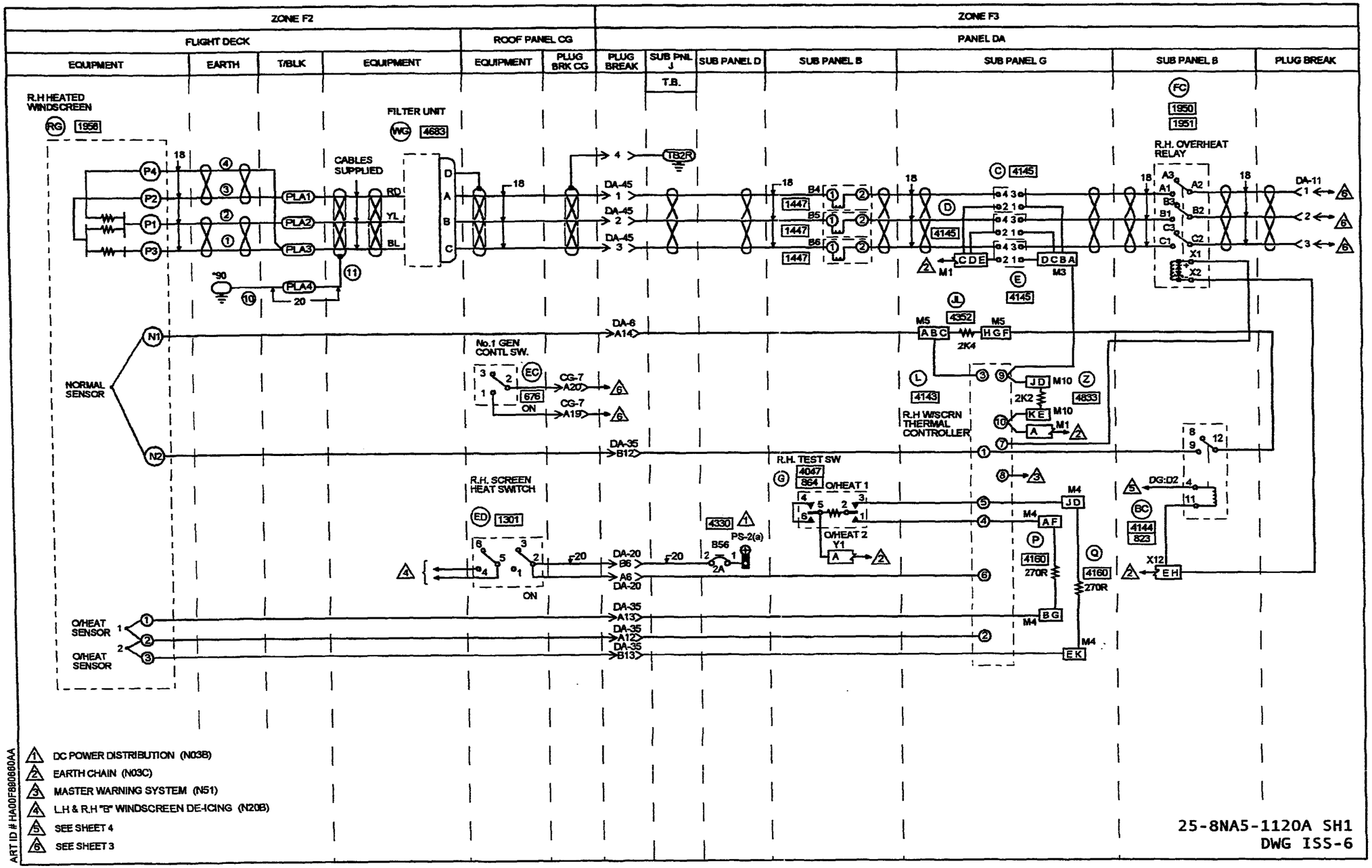
ZONE F2
ZONE F3
FLIGHT DECK
ROOF PANEL CG
PANEL DA
EQUIPMENT
EARTH
T/BLK
EQUIPMENT
EQUIPMENT
PLUG BRK CG
PLUG BREAK
SUB PNL J
T.B.
SUB PANEL D
SUB PANEL B
SUB PANEL G
SUB PANEL B
PLUG BREAK
R.H HEATED WINDSCREEN
RG 1958
FILTER UNIT
WG 4683
CABLES SUPPLIED
PLA1
PLA2
PLA3
PLA4
RD
YL
BL
TB2R
DA-45
DA-11
R.H. OVERHEAT RELAY
FC
1950
1951
1447
4145
4352
4143
4833
4047
864
4330
1301
676
4160
270R
4144
823
NORMAL SENSOR
O/HEAT SENSOR
No.1 GEN CONTL SW.
CG-7 A20
CG-7 A19
DA-6 A14
DA-35 B12
R.H. SCREEN HEAT SWITCH
R.H. TEST SW
O/HEAT 1
O/HEAT 2
PS-2(a)
DA-20 B6
DA-20 A6
DA-35 A13
DA-35 A12
DA-35 B13
R.H W/SCRN THERMAL CONTROLLER
DG:D2
X12
1 DC POWER DISTRIBUTION (N03B)
2 EARTH CHAIN (N03C)
3 MASTER WARNING SYSTEM (N51)
4 L.H & R.H "B" WINDSCREEN DE-ICING (N20B)
5 SEE SHEET 4
6 SEE SHEET 3
ART ID # HA00F880860AA
25-8NA5-1120A SH1
DWG ISS-6

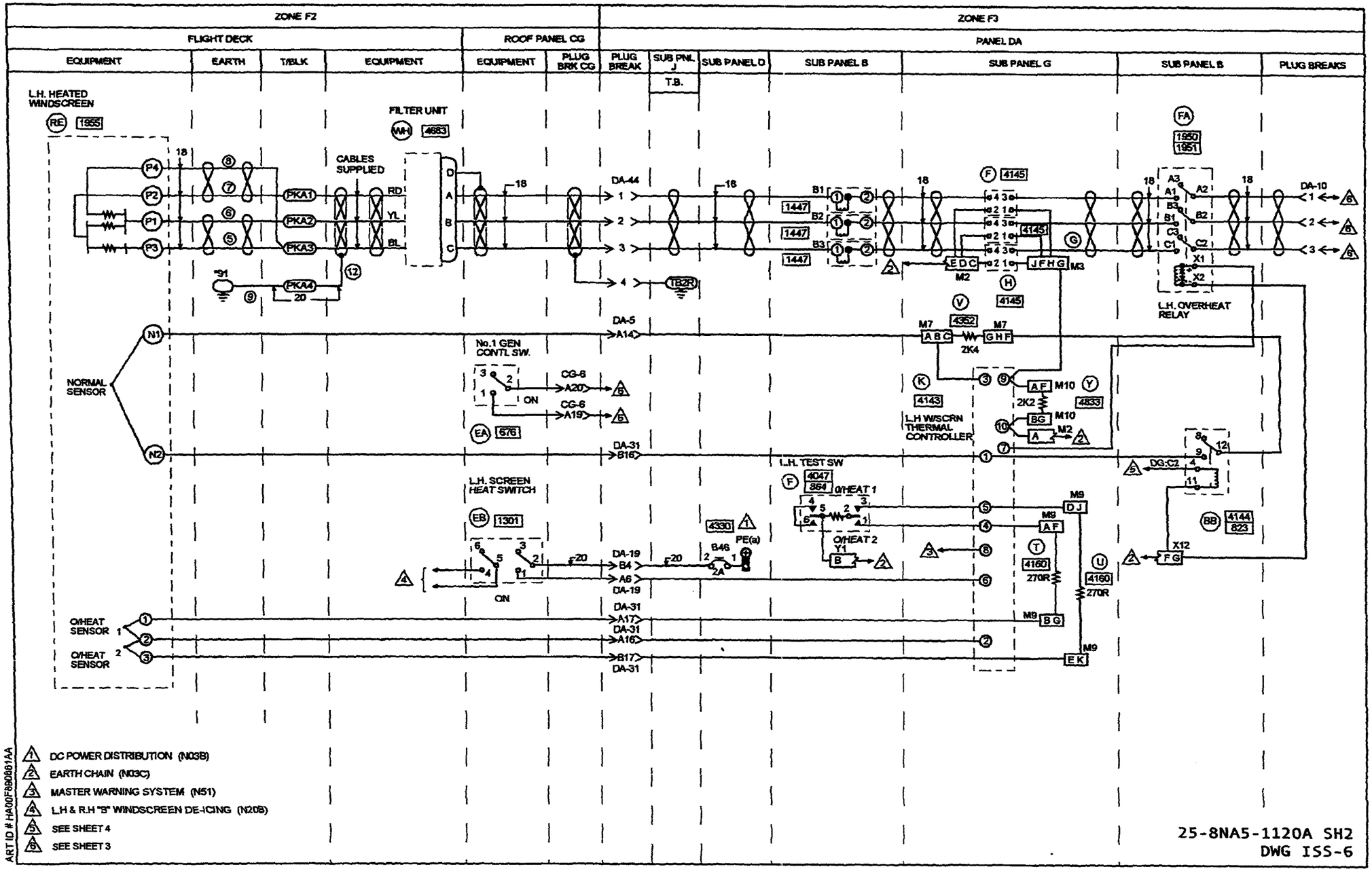
ZONE F2
ZONE F3
FLIGHT DECK
ROOF PANEL CG
PANEL DA
EQUIPMENT
EARTH
T/BLK
EQUIPMENT
EQUIPMENT
PLUG BRK CG
PLUG BREAK
SUB PNL J
T.B.
SUB PANEL D
SUB PANEL B
SUB PANEL G
SUB PANEL B
PLUG BREAKS
L.H. HEATED WINDSCREEN
FILTER UNIT
CABLES SUPPLIED
NORMAL SENSOR
No.1 GEN CONTL SW.
L.H. SCREEN HEAT SWITCH
L.H. TEST SW
L.H W/SCRN THERMAL CONTROLLER
L.H. OVERHEAT RELAY
O/HEAT SENSOR 1
O/HEAT SENSOR 2
1 DC POWER DISTRIBUTION (N03B)
2 EARTH CHAIN (N03C)
3 MASTER WARNING SYSTEM (N51)
4 L.H & R.H "B" WINDSCREEN DE-ICING (N20B)
5 SEE SHEET 4
6 SEE SHEET 3
ART ID # HA00F680861AA
25-8NA5-1120A SH2
DWG ISS-6

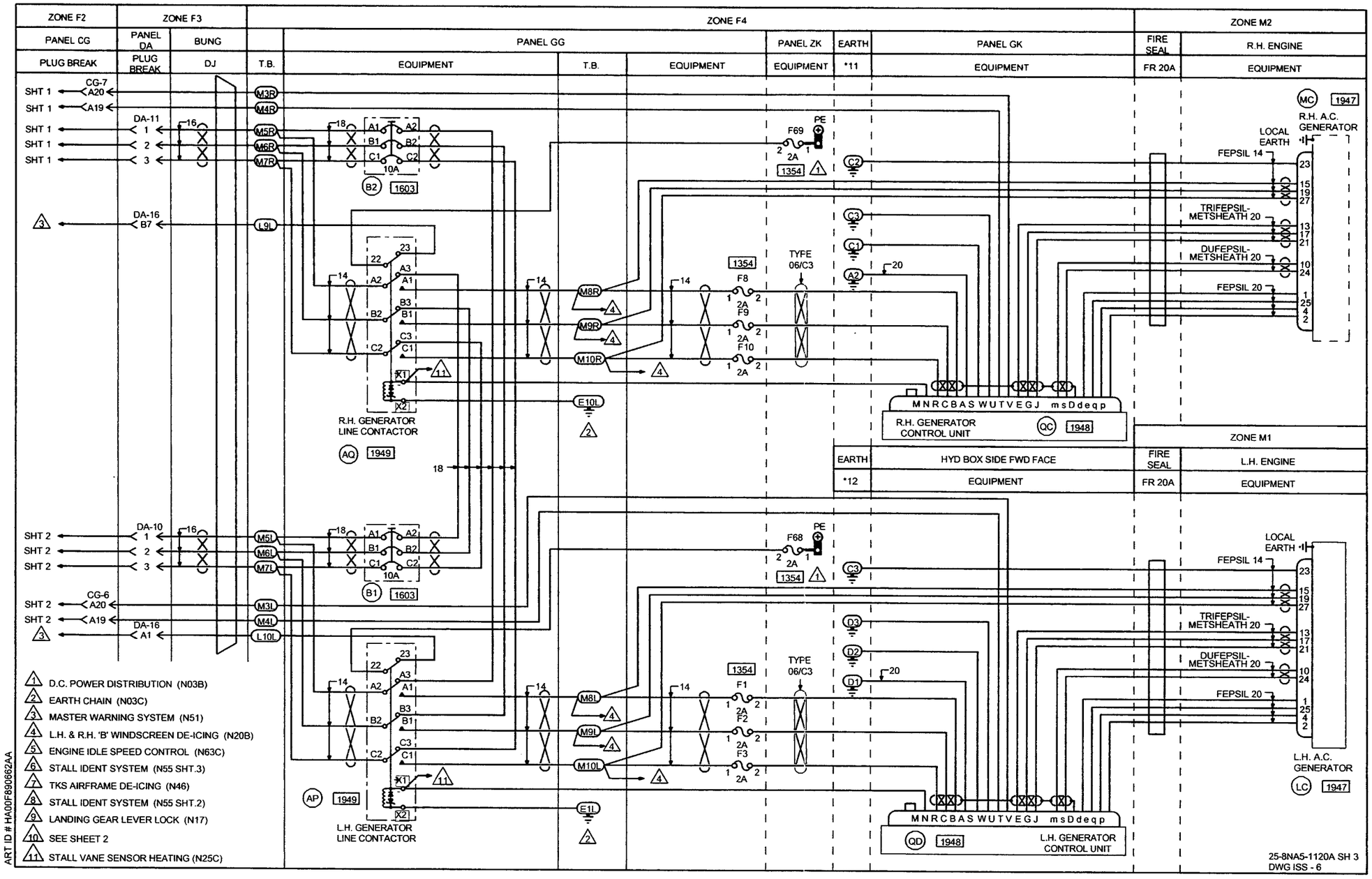
ZONE F2
ZONE F3
ZONE F4
ZONE M2
ZONE M1
PANEL CG
PANEL DA
BUNG
PANEL GG
PANEL ZK
EARTH
PANEL GK
FIRE SEAL
R.H. ENGINE
PLUG BREAK
PLUG BREAK
DJ
T.B.
EQUIPMENT
T.B.
EQUIPMENT
EQUIPMENT
*11
EQUIPMENT
FR 20A
EQUIPMENT
SHT 1
CG-7
A20
A19
DA-11
1
2
3
DA-16
B7
M3R
M4R
M5R
M6R
M7R
L9L
A1
A2
B1
B2
C1
C2
10A
B2
1603
F69
PE
2A
1354
C2
C3
C1
A2
20
TYPE
06/C3
1354
F8
F9
F10
M8R
M9R
M10R
E10L
X1
X2
R.H. GENERATOR
LINE CONTACTOR
AQ
1949
18
MC
1947
R.H. A.C.
GENERATOR
LOCAL
EARTH
FEPSIL 14
TRIFEPSIL-
METSHEATH 20
DUFEPSIL-
METSHEATH 20
FEPSIL 20
MNRCBASWUTVEGJ msDdeqp
R.H. GENERATOR
CONTROL UNIT
QC
1948
EARTH
*12
HYD BOX SIDE FWD FACE
EQUIPMENT
FIRE SEAL
FR 20A
L.H. ENGINE
EQUIPMENT
SHT 2
DA-10
CG-6
A20
A19
DA-16
A1
M5L
M6L
M7L
M3L
M4L
L10L
B1
1603
F68
C3
D3
D2
D1
1354
F1
F2
F3
M8L
M9L
M10L
E1L
AP
1949
L.H. GENERATOR
LINE CONTACTOR
MNRCBASWUTVEGJ msDdeqp
QD
1948
L.H. GENERATOR
CONTROL UNIT
L.H. A.C.
GENERATOR
LC
1947
1 D.C. POWER DISTRIBUTION (N03B)
2 EARTH CHAIN (N03C)
3 MASTER WARNING SYSTEM (N51)
4 L.H. & R.H. 'B' WINDSCREEN DE-ICING (N20B)
5 ENGINE IDLE SPEED CONTROL (N63C)
6 STALL IDENT SYSTEM (N55 SHT.3)
7 TKS AIRFRAME DE-ICING (N46)
8 STALL IDENT SYSTEM (N55 SHT.2)
9 LANDING GEAR LEVER LOCK (N17)
10 SEE SHEET 2
11 STALL VANE SENSOR HEATING (N25C)
ART ID # HA00F890662AA
25-8NA5-1120A SH 3
DWG ISS - 6

ZONE F3

PANEL DA

SUB PANEL B

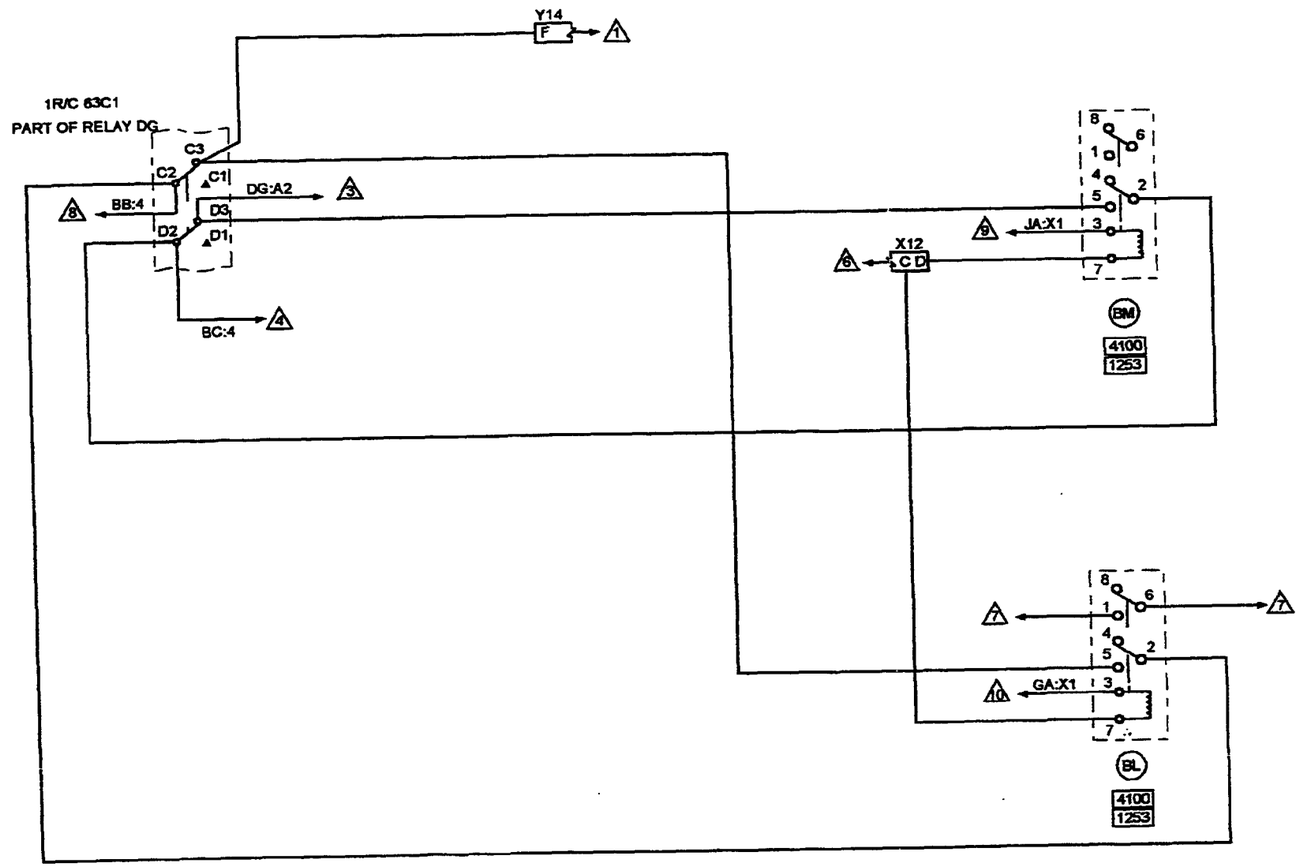

1 LANDING GEAR LEVER LOCK (M17)

3 ENGINE IDLE SPEED CONTROL (M63C)

4 L.H. & R.H. "A" WINDSCREEN DE-ICING (N20A SHT.1)

6 EARTH CHAIN (N03C)

7 ANGLE OF ATTACK (IF FITTED) (N81)

8 L.H. & R.H. "A" WINDSCREEN DE-ICING (N20A SHT.2)

9 STALL IDENT SYSTEM (N55 SHT.6)

10 STALL IDENT SYSTEM (N55 SHT.4)

25-8NA5-1120A SH4
DWG ISS-6

ART ID # HA00F8806B3AA

IDENT	PART NUMBER	1234567 NOMENCLATURE	EFFECT FROM TO	UNITS PER ASSY
		LH AND RH A WINDSCREEN DE-ICING	146146 148148 265276	
	25-8NA5-1120A	WIRING DIAGRAM- (MOD 253529B) (MOD 25F505A)		RF
AP-GG	HA5N	.CONTACTOR- (VK6265)		1
AQ-GG	HA5N	.CONTACTOR- (VK6265)		1
BB-DAB	HDD45F2H06	.RELAY- (VK1793) (USED WITH BASE: 418539)		1
BC-DAB	HDD45F2H06	.RELAY- (VK1793) (USED WITH BASE: 418539)		1
BL-DAB	HDS8SF3J03	.RELAY- (VK1793) (USED WITH SOCKET: RSE120074 (V58982))		1
BM-DAB	HDS8SF3J03	.RELAY- (VK1793) (USED WITH SOCKET: RSE120074 (V58982))		1
B1-DAB	7MC1-201-10	.CIRCUIT BREAKER- (VK0142)		1
B1-GG	583-96TCK14-10A	.CIRCUIT BREAKER-10AMP (VU0091)		1
B2-DAB	7MC1-201-10	.CIRCUIT BREAKER- (VK0142)		1
B2-GG	583-96TCK14-10A	.CIRCUIT BREAKER-10AMP (VU0091)		1
B3-DAB	7MC1-201-10	.CIRCUIT BREAKER- (VK0142)		1
B4-DAB	7MC1-201-10	.CIRCUIT BREAKER- (VK0142)		1
B46-DAD	483TCG11J25-2A	.CIRCUIT BREAKER-2AMP (VU0091)		1
B5-DAB	7MC1-201-10	.CIRCUIT BREAKER- (VK0142)		1
B56-DAD	483TCG11J25-2A	.CIRCUIT BREAKER-2AMP (VU0091)		1
B6-DAB	7MC1-201-10	.CIRCUIT BREAKER- (VK0142)		1
C-DAG	652-2W	.RELAY- (V10639)		1
		MISSING ITEM NO. NOT APPLICABLE		

– ITEM NOT ILLUSTRATED

IDENT	PART NUMBER	1234567 NOMENCLATURE	EFFECT FROM TO	UNITS PER ASSY
CG6-P	MTC100YH2-009	.SHELL-PLUG (VK1010) (USED WITH WAFERS: TYPE A, MTC100KT2-1101 TYPE B, MTC100KT2-1102)	146146 148148	1
CG6-P	MTC100YH2-009	.SHELL-PLUG (VK1010) (USED WITH INSERTS: PRIMARY MTC100YC1-001 SECONDARY MTC100YC1-002)	265276	1
CG6-R	MTC100YH2-010	.SHELL-RECEPTACLE (VK1010) (USED WITH WAFERS: TYPE A, MTC100KT2-1103 TYPE B, MTC100KT2-1104)	146146 148148	1
CG6-R	MTC100YH2-010	.SHELL-RECEPTACLE (VK1010) (USED WITH INSERTS: PRIMARY MTC100YC1-003 SECONDARY MTC100YC1-004)	265276	1
CG7-P	MTC100YH2-009	.SHELL-PLUG (VK1010) (USED WITH WAFERS: TYPE A, MTC100KT2-1101 TYPE B, MTC100KT2-1102)	146146 148148	1
CG7-P	MTC100YH2-009	.SHELL-PLUG (VK1010) (USED WITH INSERTS: PRIMARY MTC100YC1-001 SECONDARY MTC100YC1-002)	265276	1
CG7-R	MTC100YH2-010	.SHELL-RECEPTACLE (VK1010) (USED WITH WAFERS: TYPE A, MTC100KT2-1103 TYPE B, MTC100KT2-1104)	146146 148148	1
CG7-R	MTC100YH2-010	.SHELL-RECEPTACLE (VK1010) (USED WITH INSERTS: PRIMARY MTC100YC1-003 SECONDARY MTC100YC1-004)	265276	1
D-DAG	652-2W	.RELAY- (V10639)		1
DA10-P	MTCR161-04P	.CONNECTOR-PIN (VK1010)		1
DA10-R	MTCR101-04S	.CONNECTOR-SOCKET (VK1010)		1
DA11-P	MTCR161-04P	.CONNECTOR-PIN (VK1010)		1
DA11-R	MTCR101-04S	.CONNECTOR-SOCKET (VK1010)		1
		MISSING ITEM NO. NOT APPLICABLE		

– ITEM NOT ILLUSTRATED

IDENT	PART NUMBER	1234567 NOMENCLATURE	EFFECT FROM TO	UNITS PER ASSY
DA16-P	MTC100YH1-003	.SHELL-PLUG (VK1010) (USED WITH WAFERS: TYPE A, MTC100KT1-1101 TYPE B, MTC100KT1-1102)	146146 148148	1
DA16-P	MTC100YH1-003	.SHELL-PLUG (VK1010) (USED WITH INSERT: MTC100YC1-005)	265276	1
DA16-R	MTC100YH1-004	.SHELL-RECEPTACLE (VK1010) (USED WITH WAFERS: TYPE A, MTC100KT1-1103 TYPE B, MTC100KT1-1104)	146146 148148	1
DA16-R	MTC100YH1-004	.SHELL-RECEPTACLE (VK1010) (USED WITH INSERT: MTC100YC1-006)	265276	1
DA19-P	MTC100YH2-009	.SHELL-PLUG (VK1010) (USED WITH WAFERS: TYPE A, MTC100KT2-1101 TYPE B, MTC100KT2-1102)	146146 148148	1
DA19-P	MTC100YH2-009	.SHELL-PLUG (VK1010) (USED WITH INSERTS: PRIMARY MTC100YC1-001 SECONDARY MTC100YC1-002)	265276	1
DA19-R	MTC100YH2-010	.SHELL-RECEPTACLE (VK1010) (USED WITH WAFERS: TYPE A, MTC100KT2-1103 TYPE B, MTC100KT2-1104)	146146 148148	1
DA19-R	MTC100YH2-010	.SHELL-RECEPTACLE (VK1010) (USED WITH INSERTS: PRIMARY MTC100YC1-003 SECONDARY MTC100YC1-004)	265276	1
DA20-P	MTC100YH2-009	.SHELL-PLUG (VK1010) (USED WITH WAFERS: TYPE A, MTC100KT2-1101 TYPE B, MTC100KT2-1102)	146146 148148	1
DA20-P	MTC100YH2-009	.SHELL-PLUG (VK1010) (USED WITH INSERTS: PRIMARY MTC100YC1-001 SECONDARY MTC100YC1-002)	265276	1

MISSING ITEM NO. NOT APPLICABLE

– ITEM NOT ILLUSTRATED

IDENT	PART NUMBER	1234567 NOMENCLATURE	EFFECT FROM TO	UNITS PER ASSY
DA20-R	MTC100YH2-010	.SHELL-RECEPTACLE (VK1010) (USED WITH WAFERS: TYPE A, MTC100KT2-1103 TYPE B, MTC100KT2-1104)	146146 148148	1
DA20-R	MTC100YH2-010	.SHELL-RECEPTACLE (VK1010) (USED WITH INSERTS: PRIMARY MTC100YC1-003 SECONDARY MTC100YC1-004)	265276	1
DA31-P	MTC100YH2-009	.SHELL-PLUG (VK1010) (USED WITH WAFERS: TYPE A, MTC100KT2-1101 TYPE B, MTC100KT2-1102)	146146 148148	1
DA31-P	MTC100YH2-009	.SHELL-PLUG (VK1010) (USED WITH INSERTS: PRIMARY MTC100YC1-001 SECONDARY MTC100YC1-002)	265276	1
DA31-R	MTC100YH2-010	.SHELL-RECEPTACLE (VK1010) (USED WITH WAFERS: TYPE A, MTC100KT2-1103 TYPE B, MTC100KT2-1104)	146146 148148	1
DA31-R	MTC100YH2-010	.SHELL-RECEPTACLE (VK1010) (USED WITH INSERTS: PRIMARY MTC100YC1-003 SECONDARY MTC100YC1-004)	265276	1
DA35-P	MTC100YH2-009	.SHELL-PLUG (VK1010) (USED WITH WAFERS: TYPE A, MTC100KT2-1101 TYPE B, MTC100KT2-1102)	146146 148148	1
DA35-P	MTC100YH2-009	.SHELL-PLUG (VK1010) (USED WITH INSERTS: PRIMARY MTC100YC1-001 SECONDARY MTC100YC1-002)	265276	1
DA35-R	MTC100YH2-010	.SHELL-RECEPTACLE (VK1010) (USED WITH WAFERS: TYPE A, MTC100KT2-1103 TYPE B, MTC100KT2-1104)	146146 148148	1
DA35-R	MTC100YH2-010	.SHELL-RECEPTACLE (VK1010) (USED WITH INSERTS: PRIMARY MTC100YC1-003 SECONDARY MTC100YC1-004)	265276	1
		MISSING ITEM NO. NOT APPLICABLE		

– ITEM NOT ILLUSTRATED

IDENT	PART NUMBER	1234567 NOMENCLATURE	EFFECT FROM TO	UNITS PER ASSY
DA44-P	MTCR161-04P	.CONNECTOR-PIN (VK1010)		1
DA44-R	MTCR101-04S	.CONNECTOR-SOCKET (VK1010)		1
DA45-P	MTCR161-04P	.CONNECTOR-PIN (VK1010)		1
DA45-R	MTCR101-04S	.CONNECTOR-SOCKET (VK1010)		1
DA5-P	MTC100YH2-009	.SHELL-PLUG (VK1010) (USED WITH WAFERS: TYPE A, MTC100KT2-1101 TYPE B, MTC100KT2-1102)	146146 148148	1
DA5-P	MTC100YH2-009	.SHELL-PLUG (VK1010) (USED WITH INSERTS: PRIMARY MTC100YC1-001 SECONDARY MTC100YC1-002)	265276	1
DA5-R	MTC100YH2-010	.SHELL-RECEPTACLE (VK1010) (USED WITH WAFERS: TYPE A, MTC100KT2-1103 TYPE B, MTC100KT2-1104)	146146 148148	1
DA5-R	MTC100YH2-010	.SHELL-RECEPTACLE (VK1010) (USED WITH INSERTS: PRIMARY MTC100YC1-003 SECONDARY MTC100YC1-004)	265276	1
DA6-P	MTC100YH2-009	.SHELL-PLUG (VK1010) (USED WITH WAFERS: TYPE A, MTC100KT2-1101 TYPE B, MTC100KT2-1102)	146146 148148	1
DA6-P	MTC100YH2-009	.SHELL-PLUG (VK1010) (USED WITH INSERTS: PRIMARY MTC100YC1-001 SECONDARY MTC100YC1-002)	265276	1
DA6-R	MTC100YH2-010	.SHELL-RECEPTACLE (VK1010) (USED WITH WAFERS: TYPE A, MTC100KT2-1103 TYPE B, MTC100KT2-1104)	146146 148148	1
DA6-R	MTC100YH2-010	.SHELL-RECEPTACLE (VK1010) (USED WITH INSERTS: PRIMARY MTC100YC1-003 SECONDARY MTC100YC1-004)	265276	1
		MISSING ITEM NO. NOT APPLICABLE		

– ITEM NOT ILLUSTRATED

IDENT	PART NUMBER	1234567 NOMENCLATURE	EFFECT FROM TO	UNITS PER ASSY
DG-DAB	M400-1265	.RELAY- (VK6265) (USED WITH SOCKET: M12883-40-19 (V81349))		1
DJ	422255-7	.BUNG- (VK1793)		1
E-DAG	652-2W	.RELAY- (V10639)		1
E-GG	HWBUN1146D10B	.TERMINAL BLOCK- (VK0574)		1
EA-CG	1TP1-3M	.SWITCH- (V91929)		1
EB-CG	2TP1-3M	.SWITCH- (V91929)		1
EC-CG	1TP1-3M	.SWITCH- (V91929)		1
ED-CG	2TP1-3M	.SWITCH- (V91929)		1
F-DAB	2TL1-7	.SWITCH- (V58960) (USED WITH RESISTOR: MR5-680RPM1PCT (VK0064) (OPT TR5-680R (VK4184)))		1
F-DAG	652-2W	.RELAY- (V10639)		1
FA-DAB	M500-1383	.RELAY- (VK6265) (USED WITH SOCKET: M12883-48-02 (V81349))		1
FC-DAB	M500-1383	.RELAY- (VK6265) (USED WITH SOCKET: M12883-48-02 (V81349))		1
F1-GG	5920-99-0120074	.FUSE-2AMP (VK0657)		1
F10-GG	5920-99-0120074	.FUSE-2AMP (VK0657)		1
F2-GG	5920-99-0120074	.FUSE-2AMP (VK0657)		1
F3-GG	5920-99-0120074	.FUSE-2AMP (VK0657)		1
F68-ZK	5920-99-0120074	.FUSE-2AMP (VK0657)		1
F69-ZK	5920-99-0120074	.FUSE-2AMP (VK0657)		1
		MISSING ITEM NO. NOT APPLICABLE		

– ITEM NOT ILLUSTRATED

IDENT	PART NUMBER	1234567 NOMENCLATURE	EFFECT FROM TO	UNITS PER ASSY
F8-GG	5920-99-0120074	.FUSE-2AMP (VK0657)		1
F9-GG	5920-99-0120074	.FUSE-2AMP (VK0657)		1
G-DAB	2TL1-7	.SWITCH- (V58960) (USED WITH RESISTOR: MR5-680RPM1PCT (VK0064) (OPT TR5-680R (VK4184)))		1
G-DAG	652-2W	.RELAY- (V10639)		1
H-DAG	652-2W	.RELAY- (V10639)		1
JL-DAG	MFR5-2K4PM1PCT	.RESISTOR-2K4 (VK0064)		1
K-DAG	ND0075-2011	.CONTROLLER-MK22 (VK0672)		1
L-DAG	ND0075-2011	.CONTROLLER-MK22 (VK0672)		1
L-GG	HWBUN1146D10B	.TERMINAL BLOCK- (VK0574)		1
LC	BA02801-1	.GENERATOR- (VK4358)		1
M-GG	HWBUN1146D10B	.TERMINAL BLOCK- (VK0574)		1
MC	BA02801-1	.GENERATOR- (VK4358)		1
R M1-DAG	M81714-2DA1	.JUNCTION BLOCK- (V81349)		1
R M2-DAG	M81714-2DA1	.JUNCTION BLOCK- (V81349)		1
R M3-DAG	M81714-2DB1	.JUNCTION BLOCK- (V81349)		1
M4-DAG	MRTB20E09-111	.TERMINAL JUNCTION MODULE- (V14283)		1
M5-DAG	MRTB20E57-111	.TERMINAL JUNCTION MODULE- (V14283)		1
M7-DAG	MRTB20E57-111	.TERMINAL JUNCTION MODULE- (V14283)		1
M9-DAG	MRTB20E09-111	.TERMINAL JUNCTION MODULE- (V14283)		1
P-DAG	MFR4-270RPM1PCT	.RESISTOR-270R (VK0064)		1
PKA	72441-225-0AV2	.TERMINAL BLOCK- (VK0574)		1
PLA	72441-225-0AV2	.TERMINAL BLOCK- (VK0574)		1
		MISSING ITEM NO. NOT APPLICABLE		

– ITEM NOT ILLUSTRATED

	IDENT	PART NUMBER	1234567 NOMENCLATURE	EFFECT FROM TO	UNITS PER ASSY
	Q-DAG	MFR4-270RPM1PCT	.RESISTOR-270R (VK0064)		1
	QC-GK	CB02701	.CONTROL UNIT- (VK4358)		1
	QD	CB02701	.CONTROL UNIT- (VK4358)		1
	RE	NF24016-157	.WINDSCREEN-HEATED,LH (VK0672)	146146 148148 265276	1
	RG	NF24016-158	.WINDSCREEN-HEATED,RH (VK0672)	146146 148148 265276	1
	T-DAB	MFR4-270RPM1PCT	.RESISTOR-270R (VK0064)		1
	TB-DAJ	HWBUN1146D10B	.TERMINAL BLOCK- (VK0574)		1
	U-DAB	MFR4-270RPM1PCT	.RESISTOR-270R (VK0064)		1
	V-DAB	MFR5-2K4PM1PCT	.RESISTOR-2K4 (VK0064)		1
	WG	ND0075-1875	.FILTER UNIT- (VK0672)	146146 148148	1
	WG	ND0075-2260	.FILTER UNIT- (VK0672) (USED WITH: CONNECTOR SOCKET D38999-26FD05SN (VU0425) OUTLET GTR1054G15M (VU0419))	265276	1
	WH	ND0075-1875	.FILTER UNIT- (VK0672)	146146 148148	1
	WH	ND0075-2260	.FILTER UNIT- (VK0672) (USED WITH: CONNECTOR SOCKET D38999-26FD05SN (VU0425) OUTLET GTR1054G15M (VU0419))	265276	1
R R	X12-DAB	M81714-2DA1	.JUNCTION BLOCK- (V81349)		1
	Y-DAG	MFR5-2K2PM2PCT	.RESISTOR-2K2 (VK0064)		1
R R	Y1-DAB	M81714-2DA1	.JUNCTION BLOCK- (V81349)		1
R R	Y14-DAB	M81714-2DA1	.JUNCTION BLOCK- (V81349)		1
	Z-DAG	MFR5-2K2PM2PCT	.RESISTOR-2K2 (VK0064)		1
			MISSING ITEM NO. NOT APPLICABLE		

– ITEM NOT ILLUSTRATED

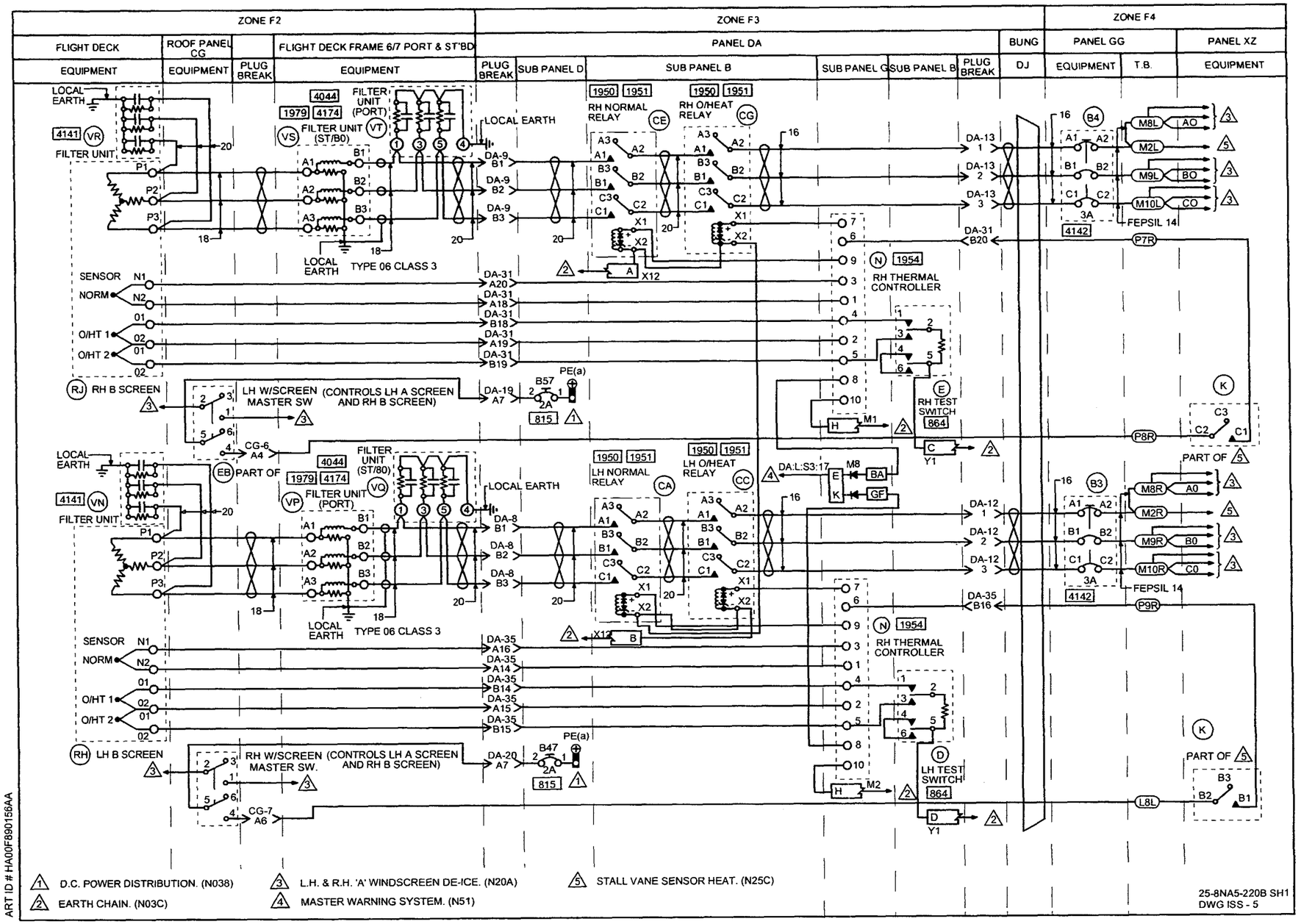
ZONE F2
ZONE F3
ZONE F4
FLIGHT DECK
ROOF PANEL CG
FLIGHT DECK FRAME 6/7 PORT & ST'BD
PANEL DA
BUNG
PANEL GG
PANEL XZ
EQUIPMENT
PLUG BREAK
SUB PANEL D
SUB PANEL B
SUB PANEL C
DJ
T.B.
LOCAL EARTH
FILTER UNIT
FILTER UNIT (PORT)
FILTER UNIT (ST/B0)
FILTER UNIT (ST/80)
TYPE 06 CLASS 3
RH NORMAL RELAY
RH O/HEAT RELAY
LH NORMAL RELAY
LH O/HEAT RELAY
RH THERMAL CONTROLLER
RH TEST SWITCH
LH TEST SWITCH
SENSOR
NORM
O/HT 1
O/HT 2
RH B SCREEN
LH B SCREEN
LH W/SCREEN MASTER SW
RH W/SCREEN MASTER SW.
(CONTROLS LH A SCREEN AND RH B SCREEN)
PART OF
FEPSIL 14
DA-13 1
DA-13 2
DA-13 3
DA-31 B20
DA-12 1
DA-12 2
DA-12 3
DA-35 B16
DA-9 B1
DA-9 B2
DA-9 B3
DA-8 B1
DA-8 B2
DA-8 B3
DA-31 A20
DA-31 A18
DA-31 B18
DA-31 A19
DA-31 B19
DA-35 A16
DA-35 A14
DA-35 B14
DA-35 A15
DA-35 B15
DA-19 A7
DA-20 A7
DA:L:S3:17
D.C. POWER DISTRIBUTION. (N038)
EARTH CHAIN. (N03C)
L.H. & R.H. 'A' WINDSCREEN DE-ICE. (N20A)
MASTER WARNING SYSTEM. (N51)
STALL VANE SENSOR HEAT. (N25C)
25-8NA5-220B SH1
DWG ISS - 5
ART ID # HA00F890156AA

IDENT	PART NUMBER	1234567 NOMENCLATURE	EFFECT FROM TO	UNITS PER ASSY
		WINDSCREEN B DE-ICING LH AND RH	091220	
	25-8NA5-220B	WIRING DIAGRAM- (MOD 253149C)		RF
B3-GG	583-96TCK14-3A	.CIRCUIT BREAKER-3AMP (VU0091)		1
B4-GG	583-96TCK14-3A	.CIRCUIT BREAKER-3AMP (VU0091)		1
B47-DAD	483TCG11J25-2A	.CIRCUIT BREAKER-2AMP (VU0091)		1
B57-DAD	483TCG11J25-2A	.CIRCUIT BREAKER-2AMP (VU0091)		1
CA-DAB	M500-1383	.RELAY- (VK6265) (OPT M500D4A) (USED WITH SOCKET: M12883-48-02 (V81349))		1
CC-DAB	M500-1383	.RELAY- (VK6265) (OPT M500D4A) (USED WITH SOCKET: M12883-48-02 (V81349))		1
CE-DAB	M500-1383	.RELAY- (VK6265) (OPT M500D4A) (USED WITH SOCKET: M12883-48-02 (V81349))		1
CG-DAB	M500-1383	.RELAY- (VK6265) (OPT M500D4A) (USED WITH SOCKET: M12883-48-02 (V81349))		1
CG6-P	MTC100YH2-009	.SHELL-PLUG (VK1010) (USED WITH WAFERS: TYPE A, MTC100KT2-1101 TYPE B, MTC100KT2-1102)		1
CG6-R	MTC100YH2-010	.SHELL-RECEPTACLE (VK1010) (USED WITH WAFERS: TYPE A, MTC100KT2-1103 TYPE B, MTC100KT2-1104)		1
		MISSING ITEM NO. NOT APPLICABLE		

— ITEM NOT ILLUSTRATED

IDENT	PART NUMBER	1234567 NOMENCLATURE	EFFECT FROM TO	UNITS PER ASSY
CG7-P	MTC100YH2-009	.SHELL-PLUG (VK1010) (USED WITH WAFERS: TYPE A, MTC100KT2-1101 TYPE B, MTC100KT2-1102)		1
CG7-R	MTC100YH2-010	.SHELL-RECEPTACLE (VK1010) (USED WITH WAFERS: TYPE A, MTC100KT2-1103 TYPE B, MTC100KT2-1104)		1
D-DAB	2TL1-7	.SWITCH- (V58960) (USED WITH RESISTOR: MR5-680RPM1PCT (VK0064) (OPT TR5-680R (VK4184)) (OPT M05-680R (VK4265)))		1
DA12-P	MTCR161-04P	.CONNECTOR-PIN (VK1010)		1
DA12-R	MTCR101-04S	.CONNECTOR-SOCKET (VK1010)		1
DA13-P	MTCR161-04P	.CONNECTOR-PIN (VK1010)		1
DA13-R	MTCR101-04S	.CONNECTOR-SOCKET (VK1010)		1
DA19-P	MTC100YH2-009	.SHELL-PLUG (VK1010) (USED WITH WAFERS: TYPE A, MTC100KT2-1101 TYPE B, MTC100KT2-1102)		1
DA19-R	MTC100YH2-010	.SHELL-RECEPTACLE (VK1010) (USED WITH WAFERS: TYPE A, MTC100KT2-1103 TYPE B, MTC100KT2-1104)		1
DA20-P	MTC100YH2-009	.SHELL-PLUG (VK1010) (USED WITH WAFERS: TYPE A, MTC100KT2-1101 TYPE B, MTC100KT2-1102)		1
DA20-R	MTC100YH2-010	.SHELL-RECEPTACLE (VK1010) (USED WITH WAFERS: TYPE A, MTC100KT2-1103 TYPE B, MTC100KT2-1104)		1
		MISSING ITEM NO. NOT APPLICABLE		

- ITEM NOT ILLUSTRATED

IDENT	PART NUMBER	1234567 NOMENCLATURE	EFFECT FROM TO	UNITS PER ASSY
DA31-P	MTC100YH2-009	.SHELL-PLUG (VK1010) (USED WITH WAFERS: TYPE A, MTC100KT2-1101 TYPE B, MTC100KT2-1102)		1
DA31-R	MTC100YH2-010	.SHELL-RECEPTACLE (VK1010) (USED WITH WAFERS: TYPE A, MTC100KT2-1103 TYPE B, MTC100KT2-1104)		1
DA35-P	MTC100YH2-009	.SHELL-PLUG (VK1010) (USED WITH WAFERS: TYPE A, MTC100KT2-1101 TYPE B, MTC100KT2-1102)		1
DA35-R	MTC100YH2-010	.SHELL-RECEPTACLE (VK1010) (USED WITH WAFERS: TYPE A, MTC100KT2-1103 TYPE B, MTC100KT2-1104)		1
DA8-P	MTC100YH1-003	.SHELL-PLUG (VK1010) (USED WITH WAFERS: TYPE A, MTC100KT1-1101 TYPE B, MTC100KT1-1102)		1
DA8-R	MTC100YH1-004	.SHELL-RECEPTACLE (VK1010) (USED WITH WAFERS: TYPE A, MTC100KT1-1103 TYPE B, MTC100KT1-1104)		1
DA9-P	MTC100YH1-003	.SHELL-PLUG (VK1010) (USED WITH WAFERS: DUMMY A, MTCX1X100-100 TYPE B, MTC100KT1-1102)		1
DA9-R	MTC100YH1-004	.SHELL-RECEPTACLE (VK1010) (USED WITH WAFERS; DUMMY A, MTCX1X100-100 TYPE B, MTC100KT1-1104)		1
DJ	422255-7	.BUNG- (VK1793)		1
		MISSING ITEM NO. NOT APPLICABLE		

– ITEM NOT ILLUSTRATED

IDENT	PART NUMBER	1234567 NOMENCLATURE	EFFECT FROM TO	UNITS PER ASSY
E-DAB	2TL1-7	.SWITCH- (V58960) (USED WITH RESISTOR: MR5-680RPM1PCT (VK0064) (OPT TR5-680R (VK4184)) (OPT M05-680R (VK4265)))		1
EB-CG	2TP1-3	.SWITCH- (V91929) (OPT (VK6596))	091116	1
EB-CG	2TP1-3M	.SWITCH- (V91929) (OPT (VK6596))	117220	1
ED-CG	2TP1-3	.SWITCH- (V91929) (OPT (VK6596))	091116	1
ED-CG	2TP1-3M	.SWITCH- (V91929) (OPT (VK6596))	117220	1
J-DAG	ND0075-2001	.CONTROLLER-THERMAL,MK20 (VK0672)		1
K-XZ	9274-4024	.RELAY- (VK6265) (PRE MOD 253084A) (FOR SPARES PROCURE 9274-6205)		1
K-XZ	9274-6205	.RELAY- (VK6265) (MOD 253084A) (FOR SPARES PROCURE IN LIEU OF 9274-4024)		1
L-GG	HWBUN1146D10B	.TERMINAL BLOCK- (VK0574)		1
M-GG	HWBUN1146D10B	.TERMINAL BLOCK- (VK0574)		1
R M1-DAG	M81714-2DA1	.JUNCTION BLOCK- (V81349)		1
R M2-DAG	M81714-2DA1	.JUNCTION BLOCK- (V81349)		1
R M8-DAG	591818-1	.MODULE- (V00779)		1
N-DAG	ND0075-2001	.CONTROLLER-THERMAL,MK20 (VK0672)		1
P-GG	HWBUN1146D10B	.TERMINAL BLOCK- (VK0574)		1
		MISSING ITEM NO. NOT APPLICABLE		

– ITEM NOT ILLUSTRATED

	IDENT	PART NUMBER	1234567 NOMENCLATURE	EFFECT FROM TO	UNITS PER ASSY
	RH	NH24016-91	.WINDSCREEN B PANEL- (VK0672)		1
	RJ	NH24016-92	.WINDSCREEN B PANEL- (VK0672)		1
	VN	25-8NF2067-1A	.3 WAY FILTER BOARD		1
	VP	ND0075-1875	.FILTER UNIT- (VK0672)		1
	VQ	HC921H0467-000	.FILTER UNIT- (V+1251)		1
	VR	25-8NF2067-1A	.3 WAY FILTER BOARD		1
	VS	ND0075-1875	.FILTER UNIT- (VK0672)		1
	VT	HC921H0467-000	.FILTER UNIT- (V+1251)		1
R	X12-DAB	M81714-2DA1	.JUNCTION BLOCK- (V81349)		1
R					
R	Y1-DAB	M81714-2DA1	.JUNCTION BLOCK- (V81349)		1
R					

MISSING ITEM NO. NOT APPLICABLE

– ITEM NOT ILLUSTRATED

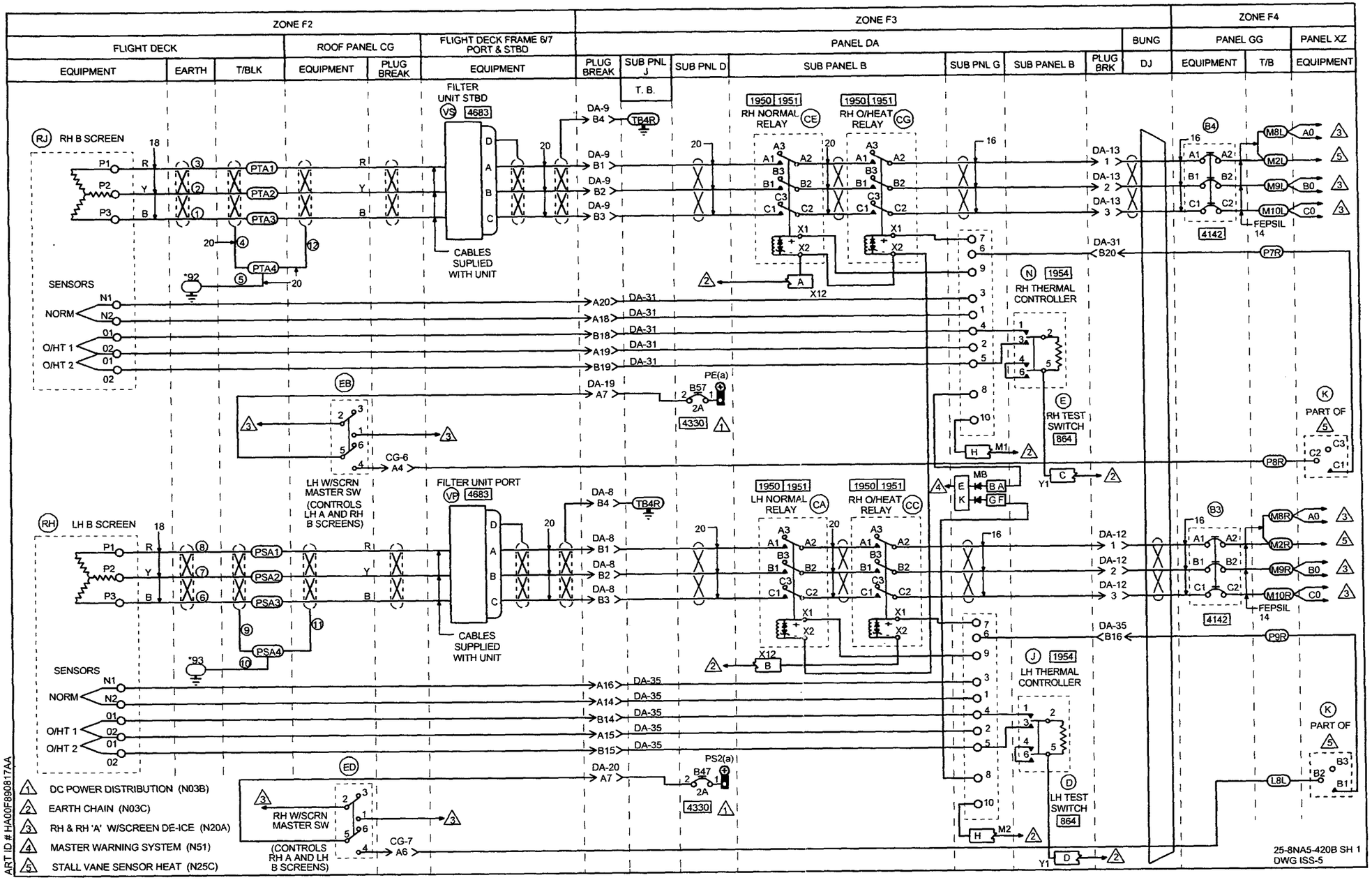
ZONE F2
ZONE F3
ZONE F4
FLIGHT DECK
ROOF PANEL CG
FLIGHT DECK FRAME 6/7 PORT & STBD
PANEL DA
BUNG
PANEL GG
PANEL XZ
EQUIPMENT
EARTH
T/BLK
PLUG BREAK
SUB PNL J
SUB PNL D
SUB PANEL B
SUB PNL G
DJ
T/B
RJ RH B SCREEN
FILTER UNIT STBD
VS 4683
CABLES SUPLIED WITH UNIT
RH NORMAL RELAY
RH O/HEAT RELAY
RH THERMAL CONTROLLER
RH TEST SWITCH
LH W/SCRN MASTER SW
(CONTROLS LH A AND RH B SCREENS)
FILTER UNIT PORT
VP 4683
RH W/SCRN MASTER SW
(CONTROLS RH A AND LH B SCREENS)
RH LH B SCREEN
LH NORMAL RELAY
RH O/HEAT RELAY
LH THERMAL CONTROLLER
LH TEST SWITCH
SENSORS
NORM
O/HT 1
O/HT 2
PART OF
FEPSIL 14
1 DC POWER DISTRIBUTION (N03B)
2 EARTH CHAIN (N03C)
3 RH & RH 'A' W/SCREEN DE-ICE (N20A)
4 MASTER WARNING SYSTEM (N51)
5 STALL VANE SENSOR HEAT (N25C)
ART ID # HA00F89081 7AA
25-8NA5-420B SH 1
DWG ISS-5

IDENT	PART NUMBER	1234567 NOMENCLATURE	EFFECT FROM TO	UNITS PER ASSY
		WINDSCREEN B DE-ICING LH AND RH	221276	
	25-8NA5-420B	WIRING DIAGRAM- (MOD 253261A) (MOD 25F505A)		RF
B3-GG	583-96TCK14-3A	.CIRCUIT BREAKER-3AMP (VU0091)		1
B4-GG	583-96TCK14-3A	.CIRCUIT BREAKER-3AMP (VU0091)		1
B47-DAD	483TCG11J25-2A	.CIRCUIT BREAKER-2AMP (VU0091)		1
B57-DAD	483TCG11J25-2A	.CIRCUIT BREAKER-2AMP (VU0091)		1
CA-DAB	M500-1383	.RELAY- (VK6265) (OPT M500D4A) (USED WITH SOCKET: M12883-48-02 (V81349))		1
CC-DAB	M500-1383	.RELAY- (VK6265) (OPT M500D4A) (USED WITH SOCKET: M12883-48-02 (V81349))		1
CE-DAB	M500-1383	.RELAY- (VK6265) (OPT M500D4A) (USED WITH SOCKET: M12883-48-02 (V81349))		1
CG-DAB	M500-1383	.RELAY- (VK6265) (OPT M500D4A) (USED WITH SOCKET: M12883-48-02 (V81349))		1
CG6-P	MTC100YH2-009	.SHELL-PLUG (VK1010) (USED WITH WAFERS: TYPE A, MTC100KT2-1101 TYPE B, MTC100KT2-1102)	221254	1
		MISSING ITEM NO. NOT APPLICABLE		

– ITEM NOT ILLUSTRATED

IDENT	PART NUMBER	1234567 NOMENCLATURE	EFFECT FROM TO	UNITS PER ASSY
CG6-P	MTC100YH2-009	.SHELL-PLUG (VK1010) (USED WITH INSERTS: PRIMARY MTC100YC1-001 SECONDARY MTC100YC1-002)	255276	1
CG6-R	MTC100YH2-010	.SHELL-RECEPTACLE (VK1010) (USED WITH WAFERS: TYPE A, MTC100KT2-1103 TYPE B, MTC100KT2-1104)	221254	1
CG6-R	MTC100YH2-010	.SHELL-RECEPTACLE (VK1010) (USED WITH INSERTS: PRIMARY MTC100YC1-003 SECONDARY MTC100YC1-004)	255276	1
CG7-P	MTC100YH2-009	.SHELL-PLUG (VK1010) (USED WITH WAFERS: TYPE A, MTC100KT2-1101 TYPE B, MTC100KT2-1102)	221254	1
CG7-P	MTC100YH2-009	.SHELL-PLUG (VK1010) (USED WITH INSERTS: PRIMARY MTC100YC1-001 SECONDARY MTC100YC1-002)	255276	1
CG7-R	MTC100YH2-010	.SHELL-RECEPTACLE (VK1010) (USED WITH WAFERS: TYPE A, MTC100KT2-1103 TYPE B, MTC100KT2-1104)	221254	1
CG7-R	MTC100YH2-010	.SHELL-RECEPTACLE (VK1010) (USED WITH INSERTS: PRIMARY MTC100YC1-003 SECONDARY MTC100YC1-004)	255276	1
D-DAB	2TL1-7	.SWITCH- (V58960) (USED WITH RESISTOR: MR5-680RPM1PCT (VK0064) (OPT TR5-680R (VK4184)) (OPT M05-680R (VK4265)))		1
DA12-P	MTCR161-04P	.CONNECTOR-PIN (VK1010)		1
DA12-R	MTCR101-04S	.CONNECTOR-SOCKET (VK1010)		1
DA13-P	MTCR161-04P	.CONNECTOR-PIN (VK1010)		1
		MISSING ITEM NO. NOT APPLICABLE		

– ITEM NOT ILLUSTRATED

IDENT	PART NUMBER	1234567 NOMENCLATURE	EFFECT FROM TO	UNITS PER ASSY
DA13-R	MTCR101-04S	.CONNECTOR-SOCKET (VK1010)		1
DA19-P	MTC100YH2-009	.SHELL-PLUG (VK1010) (USED WITH WAFERS: TYPE A, MTC100KT2-1101 TYPE B, MTC100KT2-1102)	221254	1
DA19-P	MTC100YH2-009	.SHELL-PLUG (VK1010) (USED WITH INSERTS: PRIMARY MTC100YC1-001 SECONDARY MTC100YC1-002)	255276	1
DA19-R	MTC100YH2-010	.SHELL-RECEPTACLE (VK1010) (USED WITH WAFERS: TYPE A, MTC100KT2-1103 TYPE B, MTC100KT2-1104)	221254	1
DA19-R	MTC100YH2-010	.SHELL-RECEPTACLE (VK1010) (USED WITH INSERTS: PRIMARY MTC100YC1-003 SECONDARY MTC100YC1-004)	255276	1
DA20-P	MTC100YH2-009	.SHELL-PLUG (VK1010) (USED WITH WAFERS: TYPE A, MTC100KT2-1101 TYPE B, MTC100KT2-1102)	221254	1
DA20-P	MTC100YH2-009	.SHELL-PLUG (VK1010) (USED WITH INSERTS: PRIMARY MTC100YC1-001 SECONDARY MTC100YC1-002)	255276	1
DA20-R	MTC100YH2-010	.SHELL-RECEPTACLE (VK1010) (USED WITH WAFERS; TYPE A, MTC100KT2-1103 TYPE B, MTC100KT2-1104)	221254	1
DA20-R	MTC100YH2-010	.SHELL-RECEPTACLE (VK1010) (USED WITH INSERTS: PRIMARY MTC100YC1-003 SECONDARY MTC100YC1-004)	255276	1
DA31-P	MTC100YH2-009	.SHELL-PLUG (VK1010) (USED WITH WAFERS: TYPE A, MTC100KT2-1101 TYPE B, MTC100KT2-1102)	221254	1
		MISSING ITEM NO. NOT APPLICABLE		

– ITEM NOT ILLUSTRATED

IDENT	PART NUMBER	1234567 NOMENCLATURE	EFFECT FROM TO	UNITS PER ASSY
DA31-P	MTC100YH2-009	.SHELL-PLUG (VK1010) (USED WITH INSERTS: PRIMARY MTC100YC1-001 SECONDARY MTC100YC1-002)	255276	1
DA31-R	MTC100YH2-010	.SHELL-RECEPTACLE (VK1010) (USED WITH WAFERS: TYPE A, MTC100KT2-1103 TYPE B, MTC100KT2-1104)	221254	1
DA31-R	MTC100YH2-010	.SHELL-RECEPTACLE (VK1010) (USED WITH INSERTS: PRIMARY MTC100YC1-003 SECONDARY MTC100YC1-004)	255276	1
DA35-P	MTC100YH2-009	.SHELL-PLUG (VK1010) (USED WITH WAFERS: TYPE A, MTC100KT2-1101 TYPE B, MTC100KT2-1102)	221254	1
DA35-P	MTC100YH2-009	.SHELL-PLUG (VK1010) (USED WITH INSERTS: PRIMARY MTC100YC1-001 SECONDARY MTC100YC1-002)	255276	1
DA35-R	MTC100YH2-010	.SHELL-RECEPTACLE (VK1010) (USED WITH WAFERS: TYPE A, MTC100KT2-1103 TYPE B, MTC100KT2-1104)	221254	1
DA35-R	MTC100YH2-010	.SHELL-RECEPTACLE (VK1010) (USED WITH INSERTS: PRIMARY MTC100YC1-003 SECONDARY MTC100YC1-004)	255276	1
DA8-P	MTC100YH1-003	.SHELL-PLUG (VK1010) (USED WITH WAFERS: TYPE A, MTC100KT1-1101 TYPE B, MTC100KT1-1102)	221254	1
DA8-P	MTC100YH1-003	.SHELL-PLUG (VK1010) (USED WITH INSERT: MTC100YC1-005)	255276	1
DA8-R	MTC100YH1-004	.SHELL-RECEPTACLE (VK1010) (USED WITH WAFERS: TYPE A, MTC100KT1-1103 TYPE B, MTC100KT1-1104)	221254	1

MISSING ITEM NO. NOT APPLICABLE

– ITEM NOT ILLUSTRATED

IDENT	PART NUMBER	1234567 NOMENCLATURE	EFFECT FROM TO	UNITS PER ASSY
DA8-R	MTC100YH1-004	.SHELL-RECEPTACLE (VK1010) (USED WITH INSERT: MTC100YC1-006)	255276	1
DA9-P	MTC100YH1-003	.SHELL-PLUG (VK1010) (USED WITH WAFERS: DUMMY A, MTCX1X100-100 TYPE B, MTC100KT1-1102)	221254	1
DA9-P	MTC100YH1-003	.SHELL-PLUG (VK1010) (USED WITH INSERT: MTC100YC1-005)	255276	1
DA9-R	MTC100YH1-004	.SHELL-RECEPTACLE (VK1010) (USED WITH WAFERS: DUMMY A, MTCX1X100-100 TYPE B, MTC100KT1-1104)	221254	1
DA9-R	MTC100YH1-004	.SHELL-RECEPTACLE (VK1010) (USED WITH INSERT: MTC100YC1-006)	255276	1
DJ	422255-7	.BUNG- (VK1793)		1
E-DAB	2TL1-7	.SWITCH- (V58960) (USED WITH RESISTOR: MR5-680RPM1PCT (VK0064) (OPT TR5-680R (VK4184)) (OPT M05-680R (VK4265)))		1
EB-CG	2TP1-3M	.SWITCH- (V91929) (OPT (VK6596))		1
ED-CG	2TP1-3M	.SWITCH- (V91929) (OPT (VK6596))		1
J-DAG	ND0075-2001	.CONTROLLER-THERMAL,MK20 (VK0672)		1
K-XZ	9274-6205	.RELAY- (VK6265)		1
L-GG	HWBUN1146D10B	.TERMINAL BLOCK- (VK0574)		1
M-GG	HWBUN1146D10B	.TERMINAL BLOCK- (VK0574)		1
R M1-DAG R	M81714-2DA1	.JUNCTION BLOCK- (V81349)		1
		MISSING ITEM NO. NOT APPLICABLE		

– ITEM NOT ILLUSTRATED

	IDENT	PART NUMBER	1234567 NOMENCLATURE	EFFECT FROM TO	UNITS PER ASSY
R	M2-DAG	M81714-2DA1	.JUNCTION BLOCK-		1
R			(V81349)		
R	M8-DAG	591818-1	.MODULE-		1
R			(V00779)		
	N-DAG	ND0075-2001	.CONTROLLER-THERMAL,MK20		1
			(VK0672)		
	P-GG	HWBUN1146D10B	.TERMINAL BLOCK-		1
			(VK0574)		
	PSA	72441-225-0AV2	.TERMINAL BLOCK-		1
			(VK0574)		
	PTA	72441-225-0AV2	.TERMINAL BLOCK-		1
			(VK0574)		
	RH	NH24016-91	.WINDSCREEN B PANEL-		1
			(VK0672)		
	RJ	NH24016-92	.WINDSCREEN B PANEL-		1
			(VK0672)		
	TB-DAJ	HWBUN1146D10B	.TERMINAL BLOCK-		1
			(VK0574)		
	VP	ND0075-2260	.FILTER UNIT-		1
			(VK0672)		
			(USED WITH:		
			CONNECTOR		
			D38999-26FD05SN		
			(VU0425)		
			STRAIGHT BACKSHELL		
			GTR1054G15M		
			(VU0419))		
	VS	ND0075-2260	.FILTER UNIT-		1
			(VK0672)		
			(USED WITH:		
			CONNECTOR		
			D38999-26FD05SN		
			(VU0425)		
			STRAIGHT BACKSHELL		
			GTR1054G15M		
			(VU0419))		
R	X12-DAB	M81714-2DA1	.JUNCTION BLOCK-		1
R			(V81349)		
R	Y1-DAB	M81714-2DA1	.JUNCTION BLOCK-		1
R			(V81349)		
			MISSING ITEM NO. NOT APPLICABLE		

– ITEM NOT ILLUSTRATED

DETECTION

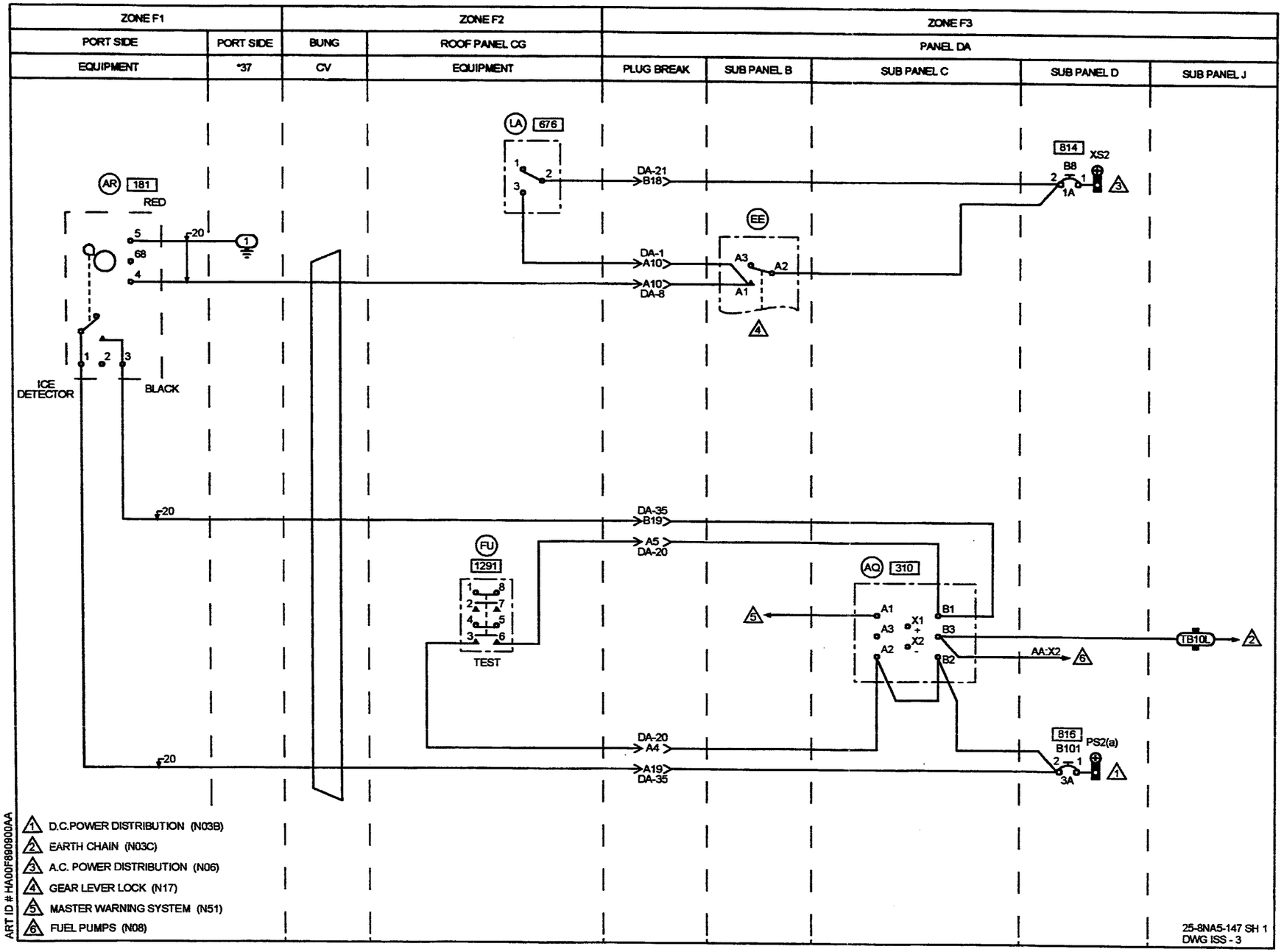
ZONE F1
ZONE F2
ZONE F3
PORT SIDE
PORT SIDE
BUNG
ROOF PANEL CG
PANEL DA
EQUIPMENT
*37
CV
EQUIPMENT
PLUG BREAK
SUB PANEL B
SUB PANEL C
SUB PANEL D
SUB PANEL J
LA 676
AR 181
RED
DA-21
B18
814
XS2
B8
1A
EE
DA-1
A10
A10
DA-8
A3
A2
A1
ICE DETECTOR
BLACK
DA-35
B19
A5
DA-20
FU
1291
TEST
AQ 310
A1
A3
A2
X1
X2
B1
B3
B2
TB10L
AA:X2
DA-20
A4
A19
DA-35
816
B101
PS2(a)
3A
D.C.POWER DISTRIBUTION (N03B)
EARTH CHAIN (N03C)
A.C. POWER DISTRIBUTION (N06)
GEAR LEVER LOCK (N17)
MASTER WARNING SYSTEM (N51)
FUEL PUMPS (N08)
ART ID # HA00F890900AA
25-8NA5-147 SH 1
DWG ISS - 3

IDENT	PART NUMBER	1234567 NOMENCLATURE	EFFECT FROM TO	UNITS PER ASSY
		ICE DETECTION	091151	
	25-8NA5-147	WIRING DIAGRAM- (MOD 253149C)		RF
AQ-DAC	TD240-60S	.TIME DELAY RELAY- (VK6265)		1
AR	NF0075-667	.ICE DETECTOR- (VK4358)		1
B101-DAD	483TCG11J25-3A	.CIRCUIT BREAKER-3AMP (VU0091)		1
B8-DAD	483TCG11J25-1A	.CIRCUIT BREAKER-1AMP (VU0091)		1
CV	422253-15	.BUNG- (VK1793)		1
DA1-P	MTC100YH1-003	.SHELL-PLUG (VK1010) (USED WITH WAFERS: TYPE A, MTC100KT1-1101 TYPE B, MTC100KT1-1102)		1
DA1-R	MTC100YH1-004	.SHELL-RECEPTACLE (VK1010) (USED WITH WAFERS: TYPE A, MTC100KT1-1103 TYPE B, MTC100KT1-1104)		1
DA20-P	MTC100YH2-009	.SHELL-PLUG (VK1010) (USED WITH WAFERS: TYPE A, MTC100KT2-1101 TYPE B, MTC100KT2-1102)		1
DA20-R	MTC100YH2-010	.SHELL-RECEPTACLE (VK1010) (USED WITH WAFERS: TYPE A, MTC100KT2-1103 TYPE B, MTC100KT2-1104)		1
DA21-P	MTC100YH2-009	.SHELL-PLUG (VK1010) (USED WITH WAFERS: TYPE A, MTC100KT2-1101 TYPE B, MTC100KT2-1102)		1
DA21-R	MTC100YH2-010	.SHELL-RECEPTACLE (VK1010) (USED WITH WAFERS: TYPE A, MTC100KT2-1103 TYPE B, MTC100KT2-1104)		1
DA35-P	MTC100YH2-009	.SHELL-PLUG (VK1010) (USED WITH WAFERS: TYPE A, MTC100KT2-1101 TYPE B, MTC100KT2-1102)		1
		MISSING ITEM NO. NOT APPLICABLE		

– ITEM NOT ILLUSTRATED

IDENT	PART NUMBER	1234567 NOMENCLATURE	EFFECT FROM TO	UNITS PER ASSY
DA35-R	MTC100YH2-010	.SHELL-RECEPTACLE (VK1010) (USED WITH WAFERS: TYPE A, MTC100KT2-1103 TYPE B, MTC100KT2-1104)		1
DA8-P	MTC100YH1-003	.SHELL-PLUG (VK1010) (USED WITH WAFERS: TYPE A, MTC100KT1-1101 TYPE B, MTC100KT1-1102)		1
DA8-R	MTC100YH1-004	.SHELL-RECEPTACLE (VK1010) (USED WITH WAFERS: TYPE A, MTC100KT1-1103 TYPE B, MTC100KT1-1104)		1
EE-DAB	M300-1264	.RELAY- (VK6265) (USED WITH SOCKET: M12883-41-16 (V81349))		1
FU-CG	WC1503	.SWITCH- (VK0653)		1
LA-CG	2TP1-7	.SWITCH- (V91929) (OPT (VK6596))	091116	1
LA-CG	2TP1-7M	.SWITCH- (V91929) (OPT (VK6596))	117151	1
TB-DAJ	HWB1146D10B	.TERMINAL BLOCK- (VK0574)		1
		MISSING ITEM NO. NOT APPLICABLE		

– ITEM NOT ILLUSTRATED

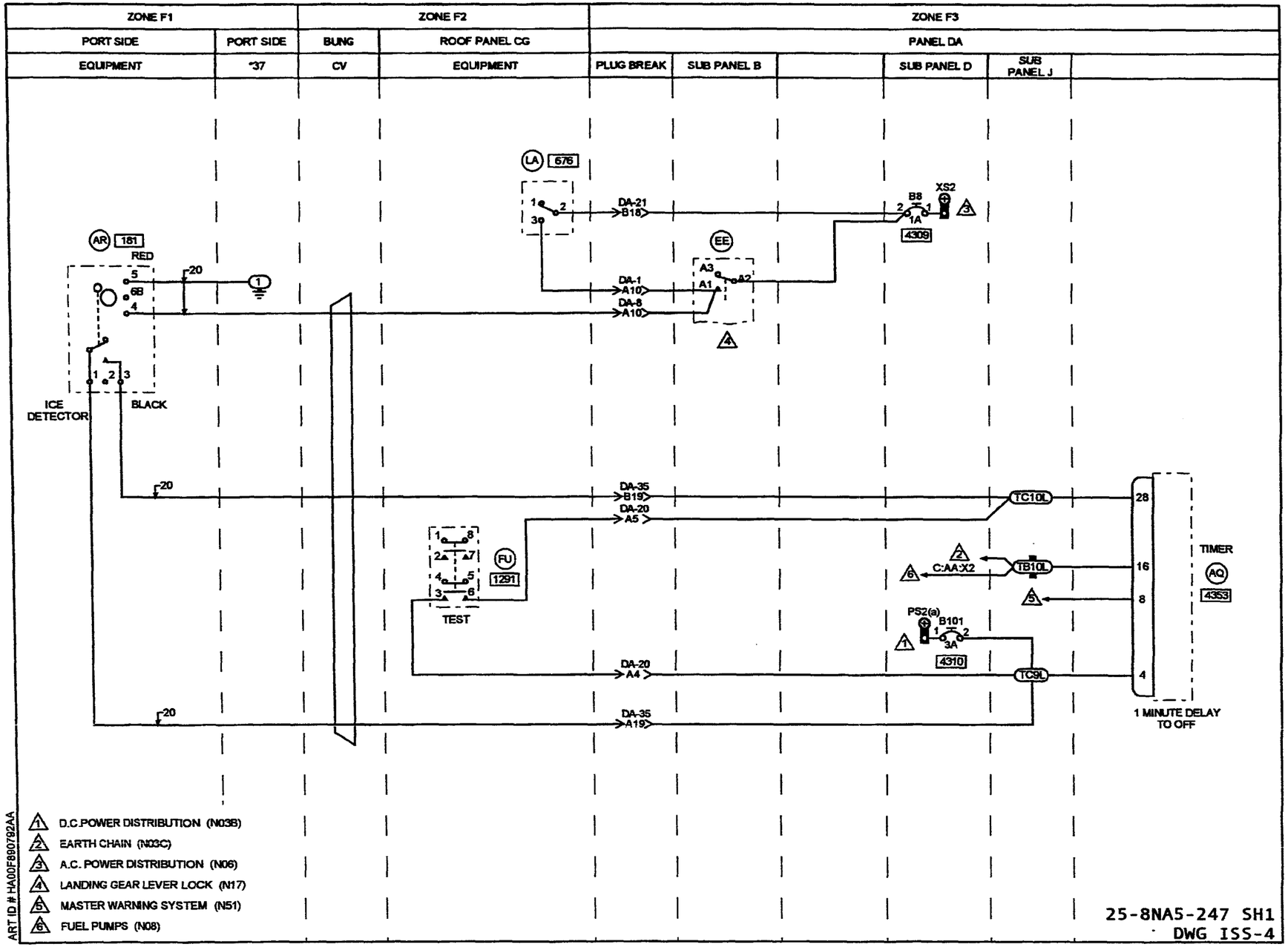
ZONE F1
ZONE F2
ZONE F3
PORT SIDE
PORT SIDE
BUNG
ROOF PANEL CG
PANEL DA
EQUIPMENT
"37
CV
EQUIPMENT
PLUG BREAK
SUB PANEL B
SUB PANEL D
SUB PANEL J
LA 676
DA-21 B18
XS2
B8
1A
4309
AR 181
RED
EE
A3
A1
A2
DA-1 A10
DA-8 A10
ICE DETECTOR
BLACK
DA-35 B19
DA-20 A5
TC10L
TB10L
C:AA:X2
TIMER
AQ
4353
FU
1291
TEST
PS2(a)
B101
3A
4310
DA-20 A4
TC9L
DA-35 A19
1 MINUTE DELAY TO OFF
1 D.C.POWER DISTRIBUTION (N03B)
2 EARTH CHAIN (N03C)
3 A.C. POWER DISTRIBUTION (N06)
4 LANDING GEAR LEVER LOCK (N17)
5 MASTER WARNING SYSTEM (N51)
6 FUEL PUMPS (N08)
ART ID # HA00F980792AA
25-8NA5-247 SH1
DWG ISS-4

IDENT	PART NUMBER	1234567 NOMENCLATURE	EFFECT FROM TO	UNITS PER ASSY
		ICE DETECTION	152276	
	25-8NA5-247	WIRING DIAGRAM-		RF
		(MOD 253214A)		
		(MOD 25F505A)		
AQ-DAC	25-8NF4661-1A	.TIME DELAY UNIT		1
AR	NF0075-667	.ICE DETECTOR-		1
		(VK4358)		
B101-DAD	483TCG11J25-3A	.CIRCUIT BREAKER-3AMP		1
		(VU0091)		
B8-DAD	483TCG11J25-1A	.CIRCUIT BREAKER-1AMP		1
		(VU0091)		
CV	422253-15	.BUNG-		1
		(VK1793)		
DA-P	CD16139-2A0	.CONNECTOR-PIN		1
		(VK5533)		
DA1-P	MTC100YH1-003	.SHELL-PLUG	152254	1
		(VK1010)		
		(USED WITH WAFERS:		
		TYPE A, MTC100KT1-1101		
		TYPE B, MTC100KT1-1102)		
DA1-P	MTC100YH1-003	.SHELL-PLUG	255276	1
		(VK1010)		
		(USED WITH INSERT:		
		MTC100YC1-005)		
DA1-R	MTC100YH1-004	.SHELL-RECEPTACLE	152254	1
		(VK1010)		
		(USED WITH WAFERS:		
		TYPE A, MTC100KT1-1103		
		TYPE B, MTC100KT1-1104)		
DA1-R	MTC100YH1-004	.SHELL-RECEPTACLE	255276	1
		(VK1010)		
		(USED WITH INSERT:		
		MTC100YC1-006)		
DA20-P	MTC100YH2-009	.SHELL-PLUG	152254	1
		(VK1010)		
		(USED WITH WAFERS:		
		TYPE A, MTC100KT2-1101		
		TYPE B, MTC100KT2-1102)		
DA20-P	MTC100YH2-009	.SHELL-PLUG	255276	1
		(VK1010)		
		(USED WITH INSERTS:		
		PRIMARY MTC100YC1-001		
		SECONDARY MTC100YC1-002)		
DA20-R	MTC100YH2-010	.SHELL-RECEPTACLE	152254	1
		(VK1010)		
		(USED WITH WAFERS:		
		TYPE A, MTC100KT2-1103		
		TYPE B, MTC100KT2-1104)		
		MISSING ITEM NO. NOT APPLICABLE		

– ITEM NOT ILLUSTRATED

IDENT	PART NUMBER	1234567 NOMENCLATURE	EFFECT FROM TO	UNITS PER ASSY
DA20-R	MTC100YH2-010	.SHELL-RECEPTACLE (VK1010) (USED WITH INSERTS: PRIMARY MTC100YC1-003 SECONDARY MTC100YC1-004)	255276	1
DA21-P	MTC100YH2-009	.SHELL-PLUG (VK1010) (USED WITH WAFERS: TYPE A, MTC100KT2-1101 TYPE B, MTC100KT2-1102)	152254	1
DA21-P	MTC100YH2-009	.SHELL-PLUG (VK1010) (USED WITH INSERTS: PRIMARY MTC100YC1-001 SECONDARY MTC100YC1-002)	255276	1
DA21-R	MTC100YH2-010	.SHELL-RECEPTACLE (VK1010) (USED WITH WAFERS: TYPE A, MTC100KT2-1103 TYPE B, MTC100KT2-1104)	152254	1
DA21-R	MTC100YH2-010	.SHELL-RECEPTACLE (VK1010) (USED WITH INSERTS: PRIMARY MTC100YC1-003 SECONDARY MTC100YC1-004)	255276	1
DA35-P	MTC100YH2-009	.SHELL-PLUG (VK1010) (USED WITH WAFERS: TYPE A, MTC100KT2-1101 TYPE B, MTC100KT2-1102)	152254	1
DA35-P	MTC100YH2-009	.SHELL-PLUG (VK1010) (USED WITH INSERTS: PRIMARY MTC100YC1-001 SECONDARY MTC100YC1-002)	255276	1
DA35-R	MTC100YH2-010	.SHELL-RECEPTACLE (VK1010) (USED WITH WAFERS: TYPE A, MTC100KT2-1103 TYPE B, MTC100KT2-1104)	152254	1
DA35-R	MTC100YH2-010	.SHELL-RECEPTACLE (VK1010) (USED WITH INSERTS: PRIMARY MTC100YC1-003 SECONDARY MTC100YC1-004)	255276	1
DA8-P	MTC100YH1-003	.SHELL-PLUG (VK1010) (USED WITH WAFERS: TYPE A, MTC100KT1-1101 TYPE B, MTC100KT1-1102)	152254	1
		MISSING ITEM NO. NOT APPLICABLE		

– ITEM NOT ILLUSTRATED

IDENT	PART NUMBER	1234567 NOMENCLATURE	EFFECT FROM TO	UNITS PER ASSY
DA8-P	MTC100YH1-003	.SHELL-PLUG (VK1010) (USED WITH INSERT: MTC100YC1-005)	255276	1
DA8-R	MTC100YH1-004	.SHELL-RECEPTACLE (VK1010) (USED WITH WAFERS: TYPE A, MTC100KT1-1103 TYPE B, MTC100KT1-1104)	152254	1
DA8-R	MTC100YH1-004	.SHELL-RECEPTACLE (VK1010) (USED WITH INSERT: MTC100YC1-006)	255276	1
EE-DAB	M300-1264	.RELAY- (VK6265) (USED WITH SOCKET: M12883-41-16 (V81349))		1
FU-CG	WC1503	.SWITCH- (VK0653)		1
LA-CG	2TP1-7M	.SWITCH- (V91929) (OPT (VK6596))		1
TB-DAJ	HWB1146D10B	.TERMINAL BLOCK- (VK0574)		1
TC-DAJ	HWB1736D10B	.TERMINAL BLOCK- (VK0574)		1
		MISSING ITEM NO. NOT APPLICABLE		

– ITEM NOT ILLUSTRATED

CHAPTER 31

INDICATING/ RECORDING SYSTEMS

CHAPTER 31 - INDICATING/RECORDING SYSTEMS

TABLE OF CONTENTS

SUBJECT	CHAPTER SECTION UNIT	FIGURE	EFFECT
INDEPENDENT INSTRUMENTS	31-20-00		
O.A.T.,FUEL,BATTERY TEMPERATURE	31-20-35	2	091109
			233233
			235235
			237237
OUTSIDE AIR,FUEL TEMPERATURE	31-20-35	3	110232
			234234
			236236
			238276
R/C OF BRAKE PRESSURE	31-20-60	2	091276

CHAPTER 31 - INDICATING/RECORDING SYSTEMS

TABLE OF CONTENTS

SUBJECT	CHAPTER SECTION UNIT	FIGURE	EFFECT
CENTRAL WARNING SYSTEMS	31-50-00		
BAGGAGE PANNIER	31-50-05	3	113113
			124124
			144144
			235235
			237237
MASTER WARNING SYSTEM	31-50-01	4	091109
MASTER WARNING SYSTEM	31-50-01	7	110112
			114123
			125143
			145151
MASTER WARNING SYSTEM	31-50-01	8	113113
			124124
			144144
MASTER WARNING SYSTEM	31-50-01	9	152179
			181181
			183185
			187196
			198209
			212218
			220221
			223223
			225225
			229232
			234234
			236236
			238257
			259276
MASTER WARNING SYSTEM	31-50-01	14	222222
			224224
			226228
			258258

CH-SECT-UNIT-FIG	PAGE NO.	DATE
*31	1	AUG 31/03
*31	2	AUG 31/03
31-20-00	1	MAY 31/02
31-20-35- 2	0	NOV 30/02
31-20-35- 2	1	MAY 31/02
31-20-35- 2	2	MAY 31/02
31-20-35- 2	3	MAY 31/02
31-20-35- 3	0	MAY 31/02
31-20-35- 3	1	MAY 31/02
31-20-35- 3	2	MAY 31/02
31-20-35- 3	3	MAY 31/02
31-20-35- 3	4	MAY 31/02
31-20-60- 2	0	NOV 30/02
31-20-60- 2	1	NOV 30/02
31-20-60- 2	2	MAY 31/02
31-20-60- 2	3	MAY 31/02
31-20-60- 2	4	MAY 31/02
31-50-00	1	MAY 31/02
31-50-01- 4	0	MAY 31/02
31-50-01- 4	0A	MAY 31/02
31-50-01- 4	0B	MAY 31/02
31-50-01- 4	1	MAY 31/02
31-50-01- 4	2	MAY 31/02
31-50-01- 4	3	MAY 31/02
31-50-01- 4	4	MAY 31/02
31-50-01- 4	5	MAY 31/02
31-50-01- 4	6	MAY 31/02
31-50-01- 4	7	MAY 31/02
31-50-01- 4	8	MAY 31/02
31-50-01- 4	9	MAY 31/02
31-50-01- 7	0	MAY 31/02
31-50-01- 7	0A	MAY 31/02
31-50-01- 7	0B	MAY 31/02
31-50-01- 7	1	MAY 31/02
31-50-01- 7	2	MAY 31/02
31-50-01- 7	3	MAY 31/02
31-50-01- 7	4	MAY 31/02
31-50-01- 7	5	MAY 31/02
31-50-01- 7	6	MAY 31/02
31-50-01- 7	7	MAY 31/02
31-50-01- 7	8	MAY 31/02
31-50-01- 7	9	MAY 31/02
31-50-01- 8	0	NOV 30/02
31-50-01- 8	0A	MAY 31/02
31-50-01- 8	0B	MAY 31/02
31-50-01- 8	1	MAY 31/02
31-50-01- 8	2	MAY 31/02
31-50-01- 8	3	MAY 31/02
31-50-01- 8	4	MAY 31/02
31-50-01- 8	5	MAY 31/02
31-50-01- 8	6	MAY 31/02
31-50-01- 8	7	MAY 31/02
31-50-01- 8	8	MAY 31/02
31-50-01- 8	9	MAY 31/02
31-50-01- 9	0	MAY 31/02
31-50-01- 9	0A	MAY 31/02
31-50-01- 9	0B	MAY 31/02
31-50-01- 9	1	MAY 31/02
31-50-01- 9	2	MAY 31/02
31-50-01- 9	3	MAY 31/02
31-50-01- 9	4	MAY 31/02
31-50-01- 9	5	MAY 31/02
31-50-01- 9	6	MAY 31/02
31-50-01- 9	7	MAY 31/02
31-50-01- 9	8	MAY 31/02
31-50-01- 9	9	MAY 31/02
31-50-01- 9	10	MAY 31/02
31-50-01- 9	11	MAY 31/02
31-50-01- 9	12	MAY 31/02
31-50-01- 9	13	MAY 31/02
31-50-01- 9	14	MAY 31/02
31-50-01- 9	15	MAY 31/02
31-50-01- 9	16	MAY 31/02
31-50-01- 9	17	MAY 31/02
31-50-01- 9	18	MAY 31/02
31-50-01-14	0	NOV 30/02
31-50-01-14	0A	NOV 30/02
31-50-01-14	0B	MAY 31/02
31-50-01-14	1	MAY 31/02
31-50-01-14	2	MAY 31/02
31-50-01-14	3	MAY 31/02
31-50-01-14	4	MAY 31/02
31-50-01-14	5	MAY 31/02
31-50-01-14	6	MAY 31/02
31-50-01-14	7	MAY 31/02
31-50-01-14	8	MAY 31/02
31-50-01-14	9	MAY 31/02
31-50-01-14	10	MAY 31/02
31-50-01-14	11	MAY 31/02
31-50-01-14	12	MAY 31/02
31-50-01-14	13	MAY 31/02
31-50-05- 3	0	MAY 31/02
31-50-05- 3	0A	MAY 31/02
31-50-05- 3	0B	MAY 31/02
31-50-05- 3	1	MAY 31/02
31-50-05- 3	2	MAY 31/02
31-50-05- 3	3	MAY 31/02
31-50-05- 3	4	MAY 31/02
31-50-05- 3	5	MAY 31/02

*THE ASTERISK INDICATES PAGES CHANGED OR ADDED BY THE CURRENT REVISION

INDEPENDENT INSTRUMENTS

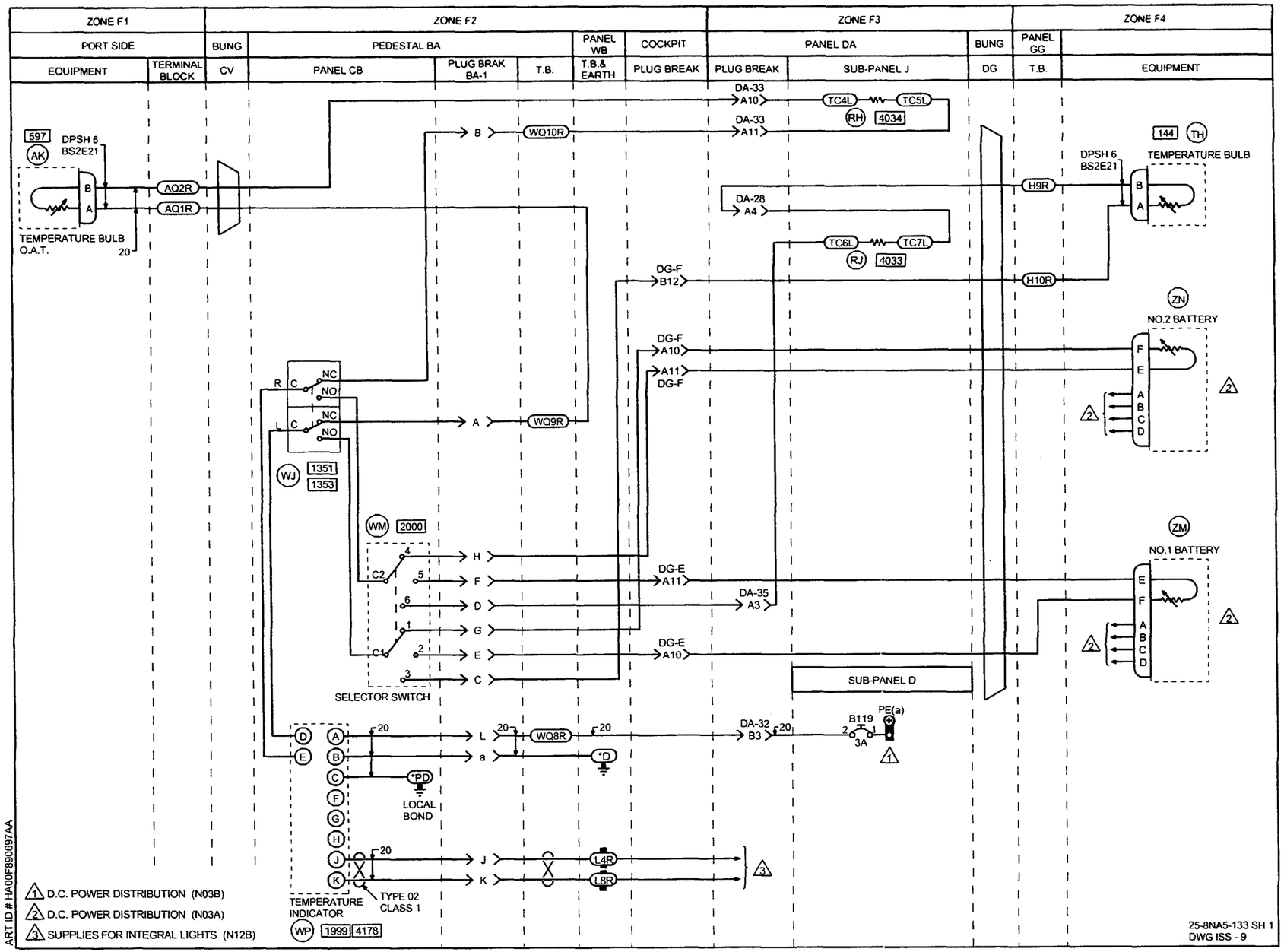
ZONE F1
ZONE F2
ZONE F3
ZONE F4
PORT SIDE
BUNG
PEDESTAL BA
PANEL WB
COCKPIT
PANEL DA
BUNG
PANEL GG
EQUIPMENT
TERMINAL BLOCK
CV
PANEL CB
PLUG BRAK BA-1
T.B.
T.B.& EARTH
PLUG BREAK
PLUG BREAK
SUB-PANEL J
DG
T.B.
EQUIPMENT
597
AK
DPSH 6
BS2E21
TEMPERATURE BULB
O.A.T.
20
AQ2R
AQ1R
B
WQ10R
DA-33
A10
DA-33
A11
TC4L
TC5L
RH
4034
DA-28
A4
TC6L
TC7L
RJ
4033
DG-F
B12
DG-F
A10
A11
DG-F
R
C
NC
NO
L
WQ9R
WJ
1351
1353
WM
2000
H
F
D
G
E
C
C2
C1
SELECTOR SWITCH
DG-E
A11
DA-35
A3
DG-E
A10
SUB-PANEL D
144
TH
DPSH 6
BS2E21
TEMPERATURE BULB
H9R
H10R
ZN
NO.2 BATTERY
F
E
A
B
C
D
ZM
NO.1 BATTERY
E
F
A
B
C
D
D
E
A
B
C
F
G
H
J
K
L
a
WQ8R
*D
*PD
LOCAL BOND
DA-32
B3
B119
3A
PE(a)
J
K
L4R
L8R
TEMPERATURE INDICATOR
TYPE 02 CLASS 1
WP
1999
4178
1 D.C. POWER DISTRIBUTION (N03B)
2 D.C. POWER DISTRIBUTION (N03A)
3 SUPPLIES FOR INTEGRAL LIGHTS (N12B)
ART ID # HA00F890697AA
25-8NA5-133 SH 1
DWG ISS - 9

IDENT	PART NUMBER	1234567 NOMENCLATURE	EFFECT FROM TO	UNITS PER ASSY
		O.A.T.,FUEL,BATTERY TEMPERATURE	091109 233233 235235 237237	
	25-8NA5-133	WIRING DIAGRAM- (MOD 253149C) (MOD 25F505A) (MOD 25A672A)		RF
AK	S110G61-978	.TEMPERATURE BULB- (VU1588)		1
AQ	HWBUN1146D10B	.TERMINAL BLOCK- (VK0574)		1
BA1-P	BAEREF000003662	.CONNECTOR-PIN (6026-18-32PNCONDB (VK1793))		1
BA1-R	BAEREF000003205	.CONNECTOR-SOCKET (6027-18-32SNCONDB (VK1793))		1
B119-DAD	483TCG11J25-3A	.CIRCUIT BREAKER-3AMP (VU0091)		1
CV	422253-15	.BUNG- (VK1793)		1
DA28-P	MTC100YH1-003	.SHELL-PLUG (VK1010) (USED WITH WAFERS: TYPE A, MTC100KT2-1101 TYPE B, MTC100KT2-1102)		1
DA28-R	MTC100YH1-004	.SHELL-RECEPTACLE (VK1010) (USED WITH WAFERS: TYPE A, MTC100KT2-1103 TYPE B, MTC100KT2-1104)		1
DA32-P	MTC100YH2-009	.SHELL-PLUG (VK1010) (USED WITH WAFERS: TYPE A, MTC100KT2-1101 TYPE B, MTC100KT2-1102)		1
DA32-R	MTC100YH2-010	.SHELL-RECEPTACLE (VK1010) (USED WITH WAFERS: TYPE A, MTC100KT2-1103 TYPE B, MTC100KT2-1104)		1
DA33-P	MTC100YH2-009	.SHELL-PLUG (VK1010) (USED WITH WAFERS: TYPE A, MTC100KT2-1101 TYPE B, MTC100KT2-1102)		1

MISSING ITEM NO. NOT APPLICABLE

– ITEM NOT ILLUSTRATED

IDENT	PART NUMBER	1234567 NOMENCLATURE	EFFECT FROM TO	UNITS PER ASSY
DA33-R	MTC100YH2-010	.SHELL-RECEPTACLE (VK1010) (USED WITH WAFERS: TYPE A, MTC100KT2-1103 TYPE B, MTC100KT2-1104)		1
DA35-P	MTC100YH2-009	.SHELL-PLUG (VK1010) (USED WITH WAFERS: TYPE A, MTC100KT2-1101 TYPE B, MTC100KT2-1102)		1
DA35-R	MTC100YH2-010	.SHELL-RECEPTACLE (VK1010) (USED WITH WAFERS: TYPE A, MTC100KT2-1103 TYPE B, MTC100KT2-1104)		1
DG	422255-8	.BUNG- (VK1793)		1
DGE-P	MTC100YH2-009	.SHELL-PLUG (VK1010) (USED WITH WAFERS: TYPE A, MTC100KT2-1103 TYPE B, MTC100KT2-1104)		1
DGE-R	MTC100YH2-010	.SHELL-RECEPTACLE (VK1010) (USED WITH WAFERS: TYPE A, MTC100KT2-1101 TYPE B, MTC100KT2-1102)		1
DGF-P	MTC100YH2-009	.SHELL-PLUG (VK1010) (USED WITH WAFERS: TYPE A, MTC100KT2-1103 TYPE B, MTC100KT2-1104)		1
DGF-R	MTC100YH2-010	.SHELL-RECEPTACLE (VK1010) (USED WITH WAFERS: TYPE A, MTC100KT2-1101 TYPE B, MTC100KT2-1102)		1
H-GG	HWBUN1146D10B	.TERMINAL BLOCK- (VK0574)		1
RH-DAJ	W21-1R5	.RESISTOR- (VK0064)		1
RJ-DAJ	W21R56	.RESISTOR- (VK0064)		1
TC-DAJ	HWBUN1736D10B	.TERMINAL BLOCK- (VK0574)		1
TH	S110G4-203	.TEMPERATURE BULB- (VU1588)		1
WJ	2D1	.SWITCH- (V91929) (OPT (VK6596))		1
		MISSING ITEM NO. NOT APPLICABLE		

– ITEM NOT ILLUSTRATED

IDENT	PART NUMBER	1234567 NOMENCLATURE	EFFECT FROM TO	UNITS PER ASSY
WM	9M60-01-2-3N	.SWITCH- (V81073)		1
WP	2141-01-0014	.TEMPERATURE INDICATOR- (VU1588)		1
WQ	HWBUN1736D10B	.TERMINAL BLOCK- (VK0574)		1
ZM	23491	.BATTERY- (VK0371) (USED WITH CONNECTOR: KPTM08F10-6S63 (V71468) (OPT (VK0316)))		1
ZN	23491	.BATTERY- (VK0371) (USED WITH CONNECTOR: KPTM08F10-6S63 (V71468) (OPT (VK0316)))		1
		MISSING ITEM NO. NOT APPLICABLE		

– ITEM NOT ILLUSTRATED

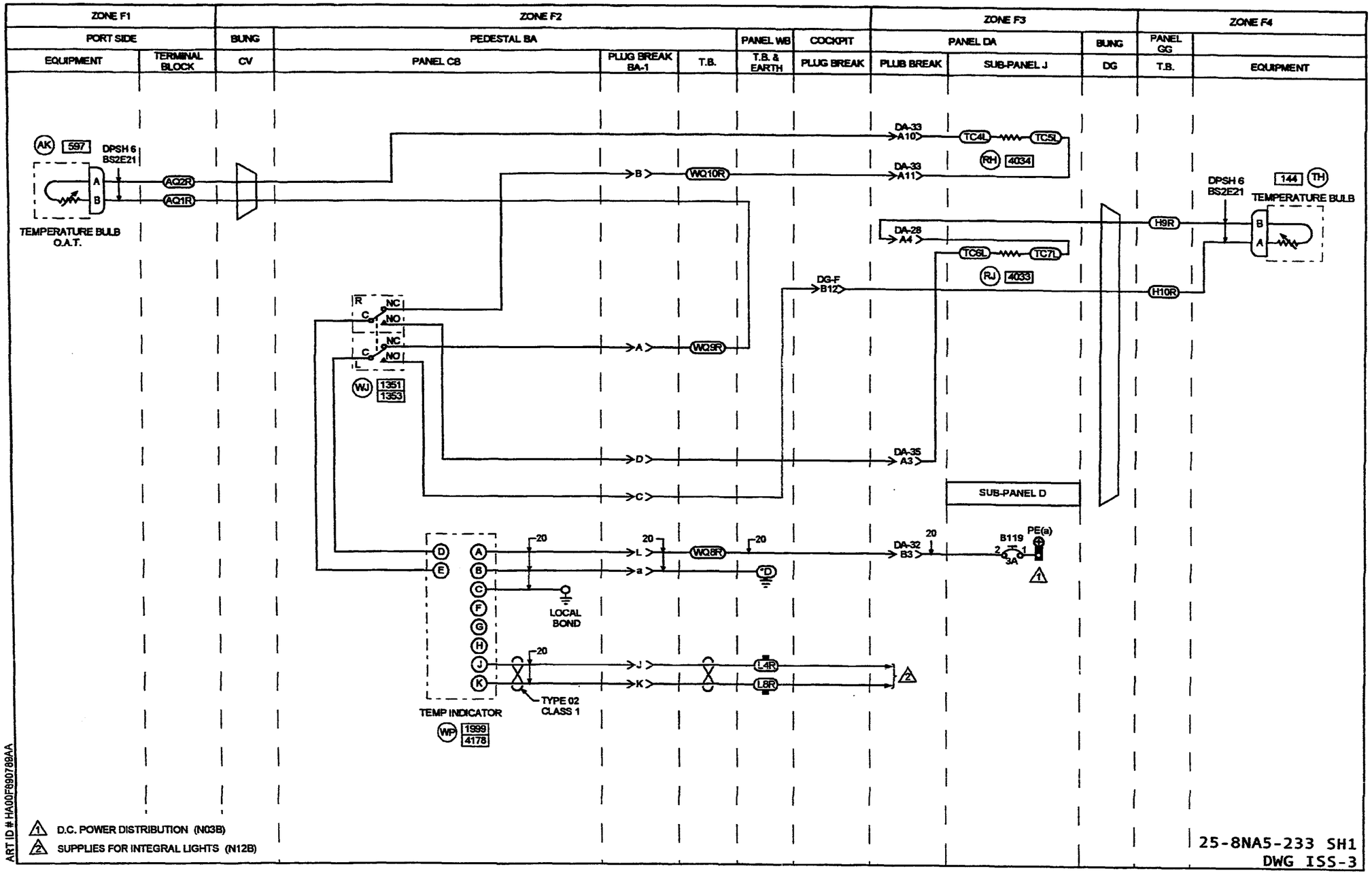
ZONE F1
ZONE F2
ZONE F3
ZONE F4
PORT SIDE
BUNG
PEDESTAL BA
PANEL WB
COCKPIT
PANEL DA
BUNG
PANEL GG
EQUIPMENT
TERMINAL BLOCK
CV
PANEL CB
PLUG BREAK BA-1
T.B.
T.B. & EARTH
PLUG BREAK
PLUB BREAK
SUB-PANEL J
DG
T.B.
EQUIPMENT
AK 597
DPSH 6 BS2E21
AQ2R
AQ1R
TEMPERATURE BULB O.A.T.
DA-33 A10
TC4L
TC5L
RH 4034
DA-33 A11
WQ10R
DA-28 A4
TC6L
TC7L
RJ 4033
DG-F B12
H9R
H10R
DPSH 6 BS2E21
144 TH
TEMPERATURE BULB
WQ9R
WJ 1351 1353
DA-35 A3
SUB-PANEL D
WQ8R
DA-32 B3
B119
PE(a)
LOCAL BOND
L4R
L8R
TYPE 02 CLASS 1
TEMP INDICATOR
WP 1999 4178
D.C. POWER DISTRIBUTION (N03B)
SUPPLIES FOR INTEGRAL LIGHTS (N12B)
ART ID # HA00F890789AA
25-8NA5-233 SH1
DWG ISS-3

IDENT	PART NUMBER	1234567 NOMENCLATURE	EFFECT FROM TO	UNITS PER ASSY
		OUTSIDE AIR,FUEL TEMPERATURE	110232 234234 236236 238276	
	25-8NA5-233	WIRING DIAGRAM- (MOD 253187A)		RF
AK	S110G61-978	.TEMPERATURE BULB- (VU1588)		1
AQ	HWBUN1146D10B	.TERMINAL BLOCK- (VK0574)		1
BA1-P	BAEREF000003205	.CONNECTOR-SOCKET (6027-18-32SNCONDB (VK1793))		1
BA1-R	BAEREF000003662	.CONNECTOR-PIN (6026-18-32PNCONDB (VK1793))		1
B119-DAD	483TCG11J25-3A	.CIRCUIT BREAKER-3AMP (VU0091)		1
CV	422253-15	.BUNG- (VK1793)		1
DA28-P	MTC100YH1-003	.SHELL-PLUG (VK1010) (USED WITH WAFERS: TYPE A, MTC100KT2-1101 TYPE B, MTC100KT2-1102)	110232 234234 236236 238254	1
DA28-P	MTC100YH1-003	.SHELL-PLUG (VK1010) (USED WITH INSERT: MTC100YC1-005) (MOD 253252A)	255276	1
DA28-R	MTC100YH1-004	.SHELL-RECEPTACLE (VK1010) (USED WITH WAFERS: MTC100KT2-1103 MTC100KT2-1104)	110232 234234 236236 238254	1
DA28-R	MTC100YH1-004	.SHELL-RECEPTACLE (VK1010) (USED WITH INSERT: MTC100YC1-006) (MOD 253252A)	255276	1
DA32-P	MTC100YH2-009	.SHELL-PLUG (VK1010) (USED WITH WAFERS: TYPE A, MTC100KT2-1101 TYPE B, MTC100KT2-1102)	110232 234234 236236 238254	1
		MISSING ITEM NO. NOT APPLICABLE		

– ITEM NOT ILLUSTRATED

IDENT	PART NUMBER	1234567 NOMENCLATURE	EFFECT FROM TO	UNITS PER ASSY
DA32-P	MTC100YH2-009	.SHELL-PLUG (VK1010) (USED WITH INSERTS: PRIMARY MTC100YC1-001 SECONDARY MTC100YC1-002) (MOD 253252A)	255276	1
DA32-R	MTC100YH2-010	.SHELL-RECEPTACLE (VK1010) (USED WITH WAFERS: MTC100KT2-1103 MTC100KT2-1104)	110232 234234 236236 238254	1
DA32-R	MTC100YH2-010	.SHELL-RECEPTACLE (VK1010) (USED WITH INSERTS: PRIMARY MTC100YC1-003 SECONDARY MTC100YC1-004) (MOD 253252A)	255276	1
DA33-P	MTC100YH2-009	.SHELL-PLUG (VK1010) (USED WITH WAFERS: TYPE A, MTC100KT2-1101 TYPE B, MTC100KT2-1102)	110232 234234 236236 238254	1
DA33-P	MTC100YH2-009	.SHELL-PLUG (VK1010) (USED WITH INSERTS: PRIMARY MTC100YC1-001 SECONDARY MTC100YC1-002) (MOD 253252A)	255276	1
DA33-R	MTC100YH2-010	.SHELL-RECEPTACLE (VK1010) (USED WITH WAFERS: MTC100KT2-1103 MTC100KT2-1104)	110232 234234 236236 238254	1
DA33-R	MTC100YH2-010	.SHELL-RECEPTACLE (VK1010) (USED WITH INSERTS: PRIMARY MTC100YC1-003 SECONDARY MTC100YC1-004) (MOD 253252A)	255276	1
DA35-P	MTC100YH2-009	.SHELL-PLUG (VK1010) (USED WITH WAFERS: TYPE A, MTC100KT2-1101 TYPE B, MTC100KT2-1102)	110232 234234 236236 238254	1
DA35-P	MTC100YH2-009	.SHELL-PLUG (VK1010) (USED WITH INSERTS: PRIMARY MTC100YC1-001 SECONDARY MTC100YC1-002) (MOD 253252A)	255276	1

MISSING ITEM NO. NOT APPLICABLE

– ITEM NOT ILLUSTRATED

IDENT	PART NUMBER	1234567 NOMENCLATURE	EFFECT FROM TO	UNITS PER ASSY
DA35-R	MTC100YH2-010	.SHELL-RECEPTACLE (VK1010) (USED WITH WAFERS: MTC100KT2-1103 MTC100KT2-1104)	110232 234234 236236 238254	1
DA35-R	MTC100YH2-010	.SHELL-RECEPTACLE (VK1010) (USED WITH INSERTS: PRIMARY MTC100YC1-003 SECONDARY MTC100YC1-004) (MOD 253252A)	255276	1
DG	422255-8	.BUNG- (VK1793)		1
DGF-P	MTC100YH2-009	.SHELL-PLUG (VK1010) (USED WITH WAFERS: TYPE A, MTC100KT2-1103 TYPE B, MTC100KT2-1104)	110232 234234 236236 238254	1
DGF-P	MTC100YH2-009	.SHELL-PLUG (VK1010) (USED WITH INSERTS: PRIMARY MTC100YC1-003 SECONDARY MTC100YC1-004) (MOD 253252A)	255276	1
DGF-R	MTC100YH2-010	.SHELL-RECEPTACLE (VK1010) (USED WITH WAFERS: TYPE A, MTC100KT2-1101 TYPE B, MTC100KT2-1102)	110232 234234 236236 238254	1
DGF-R	MTC100YH2-010	.SHELL-RECEPTACLE (VK1010) (USED WITH INSERTS: PRIMARY MTC100YC1-001 SECONDARY MTC100YC1-002) (MOD 253252A)	255276	1
H-GG	HWBUN1146D10B	.TERMINAL BLOCK- (VK0574)		1
RH-DAJ	W21-1R5	.RESISTOR- (VK0064)		1
RJ-DAJ	W21R56	.RESISTOR- (VK0064)		1
TC-DAJ	HWBUN1736D10B	.TERMINAL BLOCK- (VK0574)		1
TH	S110G4-203	.TEMPERATURE BULB- (VU1588)		1
WJ	2D1	.SWITCH- (V91929) (OPT (VK6596))		1
WP	2141-01-0014	.TEMPERATURE INDICATOR- (VU1588)		1
		MISSING ITEM NO. NOT APPLICABLE		

– ITEM NOT ILLUSTRATED

IDENT	PART NUMBER	1 2 3 4 5 6 7 NOMENCLATURE	EFFECT FROM TO	UNITS PER ASSY
WQ	HWBUN1736D10B	.TERMINAL BLOCK- (VK0574)		1
		MISSING ITEM NO. NOT APPLICABLE		

– ITEM NOT ILLUSTRATED

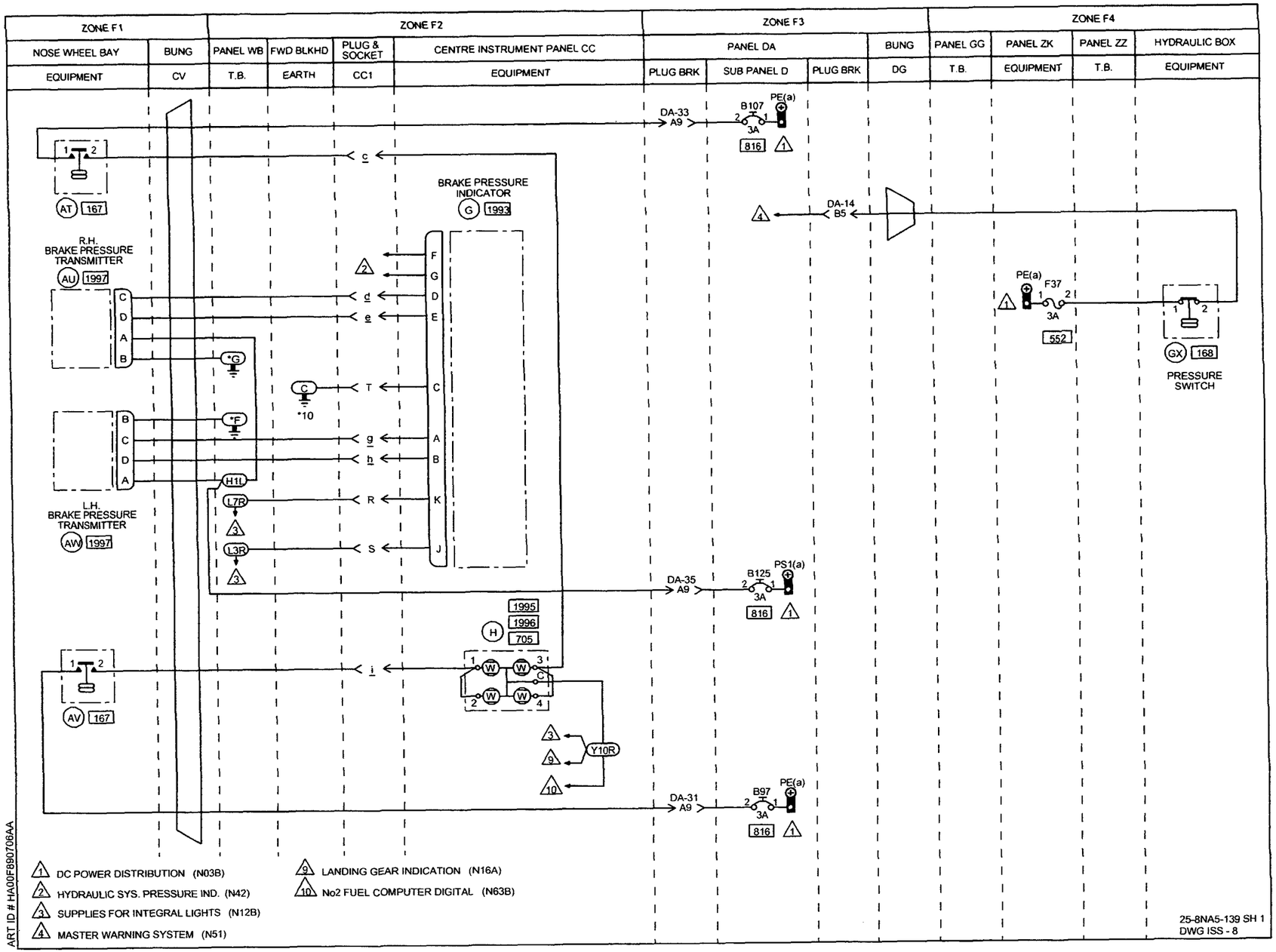
ZONE F1
NOSE WHEEL BAY
EQUIPMENT
BUNG
CV
ZONE F2
PANEL WB
T.B.
FWD BLKHD
EARTH
PLUG & SOCKET
CC1
CENTRE INSTRUMENT PANEL CC
EQUIPMENT
ZONE F3
PANEL DA
PLUG BRK
SUB PANEL D
PLUG BRK
BUNG
DG
ZONE F4
PANEL GG
T.B.
PANEL ZK
EQUIPMENT
PANEL ZZ
T.B.
HYDRAULIC BOX
EQUIPMENT
DA-33
A9
B107
3A
816
PE(a)
AT 167
BRAKE PRESSURE INDICATOR
G 1993
DA-14
B5
R.H. BRAKE PRESSURE TRANSMITTER
AU 1997
PE(a)
F37
3A
552
GX 168
PRESSURE SWITCH
*G
*F
*10
H1L
L7R
L3R
L.H. BRAKE PRESSURE TRANSMITTER
AW 1997
DA-35
A9
B125
3A
816
PS1(a)
1995
1996
705
H
AV 167
Y10R
DA-31
A9
B97
3A
816
PE(a)
1 DC POWER DISTRIBUTION (N03B)
2 HYDRAULIC SYS. PRESSURE IND. (N42)
3 SUPPLIES FOR INTEGRAL LIGHTS (N12B)
4 MASTER WARNING SYSTEM (N51)
9 LANDING GEAR INDICATION (N16A)
10 No2 FUEL COMPUTER DIGITAL (N63B)
ART ID # HA00F890706AA
25-8NA5-139 SH 1
DWG ISS - 8

	IDENT	PART NUMBER	1234567 NOMENCLATURE	EFFECT FROM TO	UNITS PER ASSY
			R/C OF BRAKE PRESSURE	091276	
R		25-8NA5-139	WIRING DIAGRAM-		RF
R			(MOD 253149C)		
R			(MOD 25F505A)		
R			(PRE MOD 25F968A)		
	AT	TP42000	.PRESSURE SWITCH-		1
			(VU1608)		
	AU	695-4-27	.TRANSDUCER-		1
			(VU1588)		
	AU-R	6026-10-6SN	.CONNECTOR-		1
			(VK4161)		
			(OPT		
			6026-10-6SNCOND1		
			(VK1100))		
			(USED WITH OUTLET CLAMP:		
			GTR42-10NACS1		
			(VU0149))		
	AV	TP42000	.PRESSURE SWITCH-		1
			(VU1608)		
	AW	695-4-27	.TRANSDUCER-		1
			(VU1588)		
	AW-R	6026-10-6SN	.CONNECTOR-		1
			(VK4161)		
			(OPT		
			6026-10-6SNCOND1		
			(VK1100))		
			(USED WITH OUTLET CLAMP:		
			GTR42-10NACS1		
			(VU0149))		
	B107-DAD	483TCG11J25-3A	.CIRCUIT BREAKER-3AMP		1
			(VU0091)		
	B125-DAD	483TCG11J25-3A	.CIRCUIT BREAKER-3AMP		1
			(VU0091)		
	B97-DAD	483TCG11J25-3A	.CIRCUIT BREAKER-3AMP		1
			(VU0091)		
	CC1-P	6026-20-41PN	.CONNECTOR-PIN		1
			(VK4161)		
			(OPT 6026-20-41PNCOND1		
			(VK1100))		
			(USED WITH OUTLET:		
			602GB129-20-1		
			(VK1100)		
			(OPT GTR62-20NACS1		
			(VU0419)))		
	CC1-R	BAEREF000003123	.CONNECTOR-SOCKET		1
			(6027-20-41SNCONDB		
			(VK4161))		
			(USED WITH BACKSHELL:		
			GTR62-20NACS1		
			(VU0419))		
			MISSING ITEM NO. NOT APPLICABLE		

– ITEM NOT ILLUSTRATED

IDENT	PART NUMBER	1234567 NOMENCLATURE	EFFECT FROM TO	UNITS PER ASSY
CV	422253-15	.BUNG- (VK1793)		1
DA14-P	MTC100YH1-003	.SHELL-PLUG (VK1010) (USED WITH WAFERS: TYPE A, MTC100KT1-1101 TYPE B, MTC100KTI-1102)	091254	1
DA14-P	MTC100YH1-003	.SHELL-PLUG (VK1010) (USED WITH INSERT: MTC100YC1-005)	255276	1
DA14-R	MTC100YH1-004	.SHELL-RECEPTACLE (VK1010) (USED WITH WAFERS: TYPE A, MTC100KT1-1103 TYPE B, MTC100KT1-1104)	091254	1
DA14-R	MTC100YH1-004	.SHELL-RECEPTACLE (VK1010) (USED WITH INSERT: MTC100YC1-006) (MOD 253252A)	255276	1
DA31-P	MTC100YH2-009	.SHELL-PLUG (VK1010) (USED WITH WAFERS: TYPE A, MTC100KT2-1101 TYPE B, MTC100KT2-1102)	091254	1
DA31-P	MTC100YH2-009	.SHELL-PLUG (VK1010) (USED WITH INSERTS: PRIMARY MTC100YC1-001 SECONDARY MTC100YC1-002)	255276	1
DA31-R	MTC100YH2-010	.SHELL-RECEPTACLE (VK1010) (USED WITH WAFERS: TYPE A, MTC100KT2-1103 TYPE B, MTC100KT2-1104)	091254	1
DA31-R	MTC100YH2-010	.SHELL-RECEPTACLE (VK1010) (USED WITH INSERTS: PRIMARY MTC100YC1-003 SECONDARY MTC100YC1-004)	255276	1
DA33-P	MTC100YH2-009	.SHELL-PLUG (VK1010) (USED WITH WAFERS: TYPE A, MTC100KT2-1101 TYPE B, MTC100KT2-1102)	091254	1
		MISSING ITEM NO. NOT APPLICABLE		

– ITEM NOT ILLUSTRATED

IDENT	PART NUMBER	1234567 NOMENCLATURE	EFFECT FROM TO	UNITS PER ASSY
DA33-P	MTC100YH2-009	.SHELL-PLUG (VK1010) (USED WITH INSERTS: PRIMARY MTC100YC1-001 SECONDARY MTC100YC1-002)	255276	1
DA33-R	MTC100YH2-010	.SHELL-RECEPTACLE (VK1010) (USED WITH WAFERS: TYPE A, MTC100KT2-1103 TYPE B, MTC100KT2-1104)	091254	1
DA33-R	MTC100YH2-010	.SHELL-RECEPTACLE (VK1010) (USED WITH INSERTS: PRIMARY MTC100YC1-003 SECONDARY MTC100YC1-004)	255276	1
DA35-P	MTC100YH2-009	.SHELL-PLUG (VK1010) (USED WITH WAFERS: TYPE A, MTC100KT2-1101 TYPE B, MTC100KT2-1102)	091254	1
DA35-P	MTC100YH2-009	.SHELL-PLUG (VK1010) (USED WITH INSERTS: PRIMARY MTC100YC1-001 SECONDARY MTC100YC1-002)	255276	1
DA35-R	MTC100YH2-010	.SHELL-RECEPTACLE (VK1010) (USED WITH WAFERS: TYPE A, MTC100KT2-1103 TYPE B, MTC100KT2-1104)	091254	1
DA35-R	MTC100YH2-010	.SHELL-RECEPTACLE (VK1010) (USED WITH INSERTS: PRIMARY MTC100YC1-003 SECONDARY MTC100YC1-004)	255276	1
DG-DA	422255-8	.BUNG- (VK1793)		1
F37-ZK	5920-99-0120075	.FUSE-3AMP (VK0657)		1
G-CC	696-010013	.INDICATOR-BRAKE PRESSURE (VU1588)		1
		MISSING ITEM NO. NOT APPLICABLE		

– ITEM NOT ILLUSTRATED

IDENT	PART NUMBER	1234567 NOMENCLATURE	EFFECT FROM TO	UNITS PER ASSY
G-R	6026-12-10SN	.CONNECTOR- (VK4161) (OPT 6026-12-10SNCONDB (VK1793)) (USED WITH SHELL OUTLET: 602GB129-12-1 (VK1100) (OPT GTR62-12NACS1 (VU0419)))		1
GX	TP42001	.PRESSURE SWITCH- (VU1608)		1
H-CC	99-230	.SWITCH- (V32245)		1
L-WB	72444-030-0AV2	.TERMINAL BLOCK- (VK0574)		1
Y-CC	HWBUN1736D10B	.TERMINAL BLOCK- (VK0574)		1
		MISSING ITEM NO. NOT APPLICABLE		

- ITEM NOT ILLUSTRATED

CENTRAL WARNING SYSTEMS

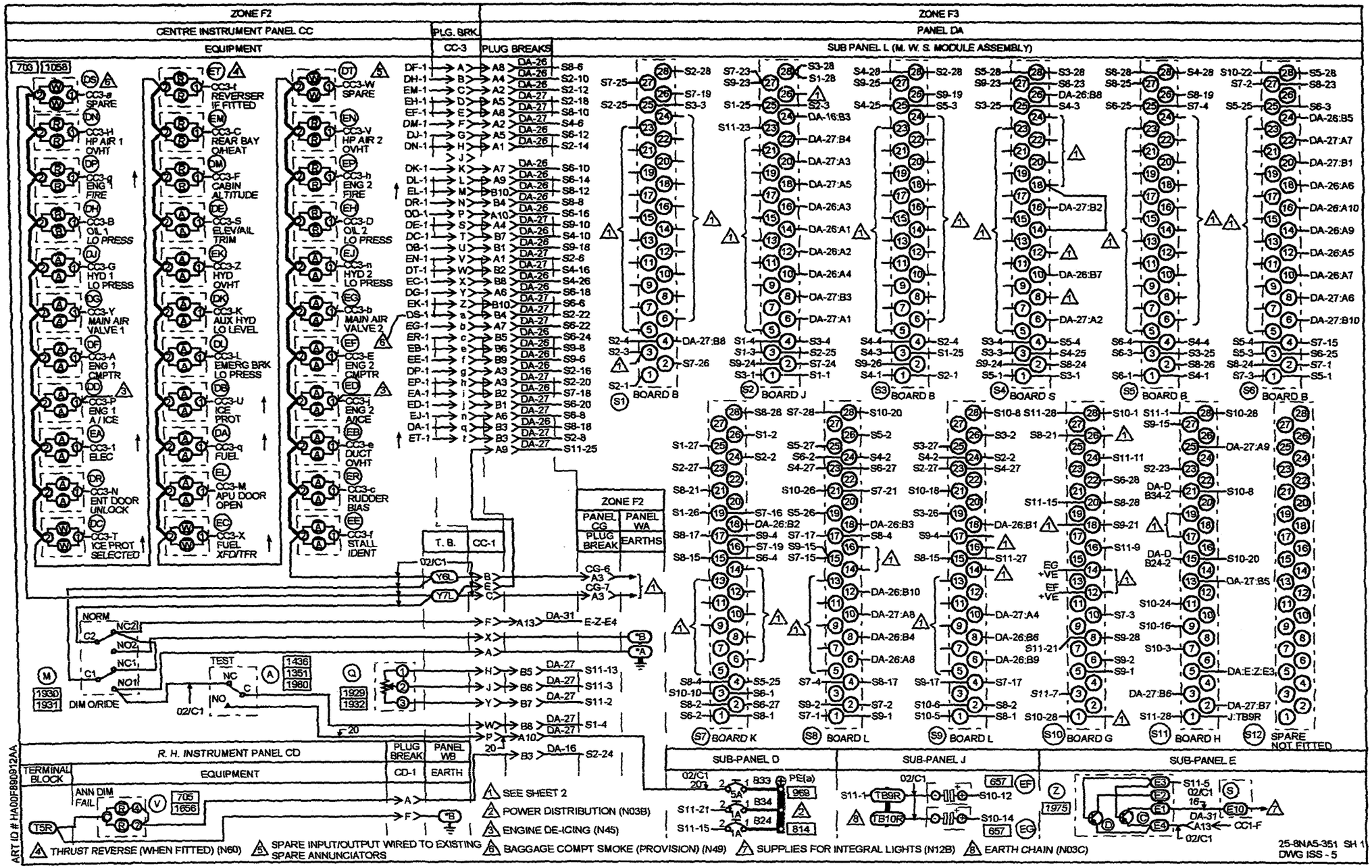
ZONE F2
CENTRE INSTRUMENT PANEL CC
EQUIPMENT
PLG. BRK.
CC-3
PLUG BREAKS
ZONE F3
PANEL DA
SUB PANEL L (M. W. S. MODULE ASSEMBLY)
CC3-a SPARE
CC3-H HP AIR 1 OVHT
CC3-q ENG 1 FIRE
CC3-B OIL 1 LO PRESS
CC3-G HYD 1 LO PRESS
CC3-Y MAIN AIR VALVE 1
CC3-A ENG 1 CMPTR
CC3-P ENG 1 A / ICE
CC3-1 ELEC
CC3-N ENT DOOR UNLOCK
CC3-T ICE PROT SELECTED
CC3-t REVERSER IF FITTED
CC3-C REAR BAY OHEAT
CC3-F CABIN ALTITUDE
CC3-S ELEV/AIL TRIM
CC3-Z HYD OVHT
CC3-K AUX HYD LO LEVEL
CC3-L EMERG BRK LO PRESS
CC3-U ICE PROT
CC3-q FUEL
CC3-M APU DOOR OPEN
CC3-X FUEL XFD/TFR
CC3-W SPARE
CC3-V HP AIR 2 OVHT
CC3-h ENG 2 FIRE
CC3-D OIL 2 LO PRESS
CC3-n HYD 2 LO PRESS
CC3-b MAIN AIR VALVE 2
CC3-E ENG 2 CMPTR
CC3-i ENG 2 A/ICE
CC3-e DUCT OVHT
CC3-c RUDDER BIAS
CC3-f STALL IDENT
ZONE F2
PANEL CG
PANEL WA
PLUG BREAK
EARTHS
T. B.
CC-1
NORM
TEST
DIM O/RIDE
BOARD B
BOARD J
BOARD B
BOARD S
BOARD B
BOARD B
BOARD K
BOARD L
BOARD L
BOARD G
BOARD H
SPARE NOT FITTED
R. H. INSTRUMENT PANEL CD
EQUIPMENT
PLUG BREAK
PANEL WB
CD-1
EARTH
TERMINAL BLOCK
ANN DIM FAIL
SUB-PANEL D
SUB-PANEL J
SUB-PANEL E
SEE SHEET 2
POWER DISTRIBUTION (N03B)
ENGINE DE-ICING (N45)
THRUST REVERSE (WHEN FITTED) (N60)
SPARE INPUT/OUTPUT WIRED TO EXISTING SPARE ANNUNCIATORS
BAGGAGE COMPT SMOKE (PROVISION) (N49)
SUPPLIES FOR INTEGRAL LIGHTS (N12B)
EARTH CHAIN (N03C)
25-8NA5-351 SH 1
DWG ISS - 5
ART ID # HA00F8909 12AA

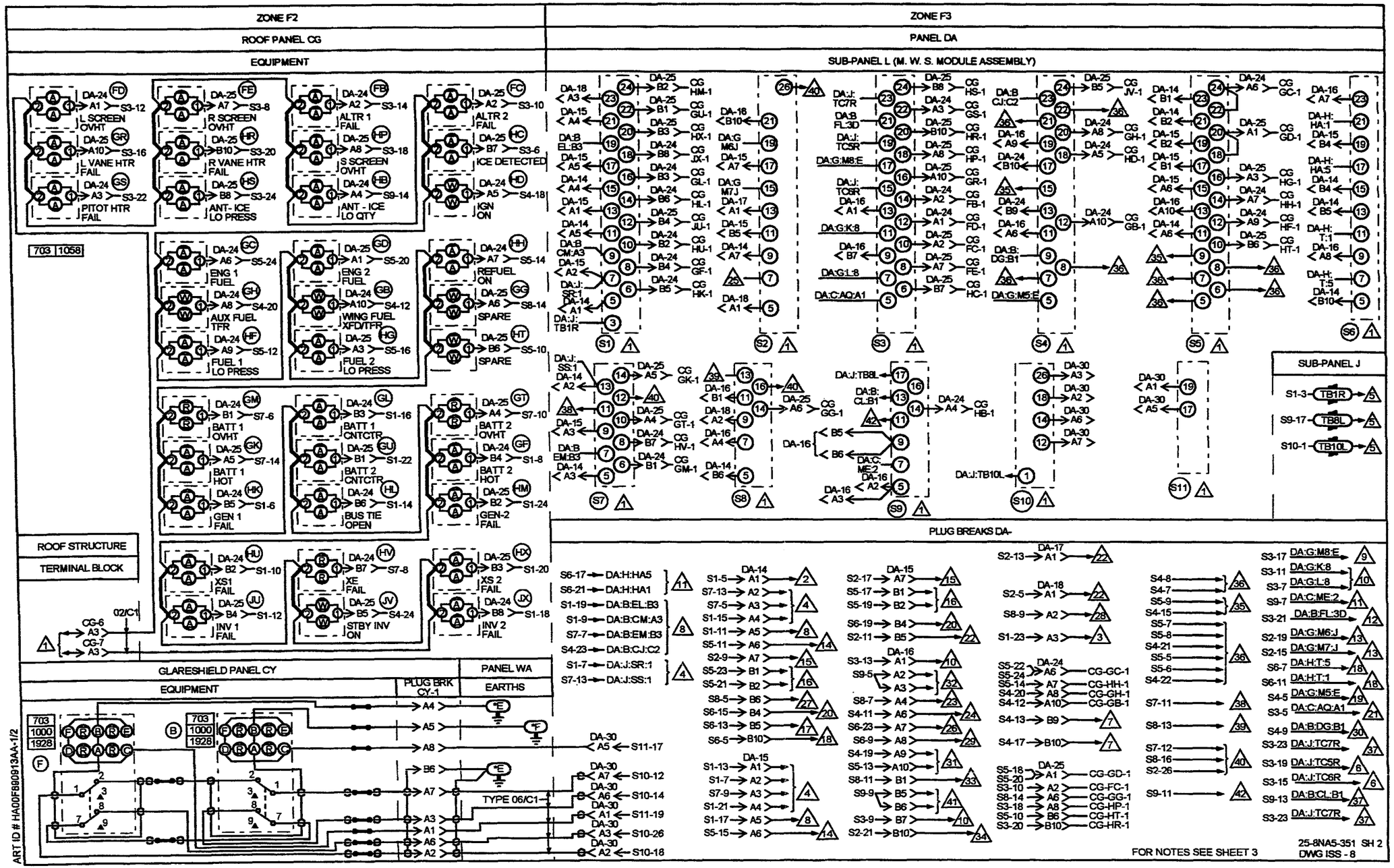
ZONE F2
ROOF PANEL CG
EQUIPMENT
ZONE F3
PANEL DA
SUB-PANEL L (M. W. S. MODULE ASSEMBLY)
L SCREEN OVHT
R SCREEN OVHT
ALTR 1 FAIL
ALTR 2 FAIL
L VANE HTR FAIL
R VANE HTR FAIL
S SCREEN OVHT
ICE DETECTED
PITOT HTR FAIL
ANT- ICE LO PRESS
ANT - ICE LO QTY
IGN ON
ENG 1 FUEL
ENG 2 FUEL
REFUEL ON
AUX FUEL TFR
WING FUEL XFD/TFR
SPARE
FUEL 1 LO PRESS
FUEL 2 LO PRESS
BATT 1 OVHT
BATT 1 CNTCTR
BATT 2 OVHT
BATT 1 HOT
BATT 2 CNTCTR
BATT 2 HOT
GEN 1 FAIL
BUS TIE OPEN
GEN-2 FAIL
XS1 FAIL
XE FAIL
XS 2 FAIL
INV 1 FAIL
STBY INV ON
INV 2 FAIL
ROOF STRUCTURE
TERMINAL BLOCK
SUB-PANEL J
PLUG BREAKS DA-
GLARESHIELD PANEL CY
EQUIPMENT
PLUG BRK CY-1
PANEL WA
EARTHS
TYPE 06/C1
FOR NOTES SEE SHEET 3
25-8NA5-351 SH 2
DWG ISS - 8
ART ID # HA00F890913AA-1/2

SUB-PANEL L M.W.S. MODULE DETAILS

R/CHART SOCKET REF	INPUT CCT BOARD REF	R/CHART SOCKET REF	INPUT CCT BOARD REF	R/CHART SOCKET REF	INPUT CCT BOARD REF	R/CHART SOCKET REF	INPUT CCT BOARD REF
S1	B	S7	K	S10	G	S11	H
S2	J	S8	L				
S3	B	S9	L				
S4	S						
S5	B						
S6	B						

PIN	DESIGNATION	DESIGNATION	DESIGNATION	DESIGNATION
1	RED TRIGGER	TRIGGER CIRCUITS	EARTH 2	EARTH 1
2	AMBER/WHITE TRIGGER		———	DIM LO
3	EARTH		AMBER LATCH	DIM CT
4	28V TEST SUPPLY	EARTH	———	———
5	I/P } 1	I/P } 1	AMBER TRIGGER	DIM CONTROL
6	O/P	O/P		———
7	I/P } 2	I/P } 2	———	AMBER LATCH
8	O/P	O/P	28V SUPPLY 2	———
9	I/P } 3	I/P } 3	———	RED LATCH 2
10	O/P	O/P	RED TRIGGER	———
11	I/P } 4	I/P } 4	———	RED LATCH 1
12	O/P	O/P	CANCEL 2	———
13	I/P } 5	I/P } 5	———	DIM HI
14	O/P	O/P	CANCEL 1	———
15	I/P } 6	+28V TEST	———	SUPPLY 1
16	O/P	REPEATER O/P	RED LATCH 2	———
17	I/P } 7	EARTH 2	———	FLASHER 1
18	O/P	REPEATER OUT	CANCEL 3	———
19	I/P } 8	REPEATER IN	———	FLASHER 2
20	O/P	———	28V SUPPLY 2	———
21	I/P } 9	CANCEL 3	———	SUPPLY 2
22	O/P	———	RED TRIGGER	———
23	I/P } 10	AMBER TRIGGER OUT	———	ANN DIM FAIL
24	O/P		RED LATCH 1	———
25	EARTH	AMBER TRIGGER IN	———	DIM SENSE
26	REPEATER O/P		CANCEL 4	———
27	AMBER/WHITE TRIGGER	———	———	TEST
28	RED TRIGGER	28V SUPPLY 2	EARTH 1	EARTH 2

NOTE : FOR CIRCUIT DIAGRAM OF M.W.S. INPUT & CONTROL BOARDS SEE DRGS REF:

25-6NF693-3A	BOARD B
25-6NF1909	BOARD G
25-6NF693-41A	BOARD J
25-7NF785-53A	BOARD L
25-8NF761-1A	BOARD H
25-7NF785-51A	BOARD K
25-8NF355-1A	BOARD Y
25-8NF355-17A	BOARD S

1. SEE SHEET 1
2. D.C. POWER SYSTEM (N01A)
3. D.C. POWER SYSTEM (N01B)
4. D.C. POWER DISTRIBUTION (N03A)
5. EARTH CHAIN (N03C)
6. STALL VANE HEAT (N25C)
7. ENGINE START & IGNITION (N04)
8. SECONDARY PWR SUPPLY (N05)
9. "B" WINDOW DE-ICE (N20B)
10. WINDSCREEN DE-ICE (N20)
11. CABIN AIR TEMP CONTROL (N24)
12. PITOT HEATER (N25)
13. FIRE DETECTION (N27)
14. FUEL PRESSURE (N29)
15. OIL PRESSURE & TEMP (N30)
16. FUEL FILTER DE-ICE (N32)
17. BRAKE PRESSURE (N39)
18. HYD SYSTEMS INDRS (N42)
19. CABIN DEPRESSN (N44)
20. ENGINE DE-ICING (N45)
21. ICE DETECTION (N47)
22. REAR BAY O/HEAT (N54)
23. ENTRY DOOR WARNING (N57)
24. TFR FUEL COCK WARNG (N58)
25. THRUST RVRS IF FITTED (N60)
26. RUDDER BIAS (N62)
27. FUEL COMPUTER No.1 (N63A)
28. FUEL COMPUTER No.2 (N63B)
29. EMERG HYD LO LEVEL (N79)
30. ENG IDLE SPEED CONTRL (N63C)
31. LONG RNG FUEL SYST (N90A&B)
32. STALL IDENT SYSTEM (N55)
33. A.P.U. (N83)
34. BAGGAGE CPT SMOKE PROVN (N49)
35. SPARE I/O WIRED TO SPARE ANNUNCIATORS
36. SPARE I/O NOT WIRED TO ANNUNCIATORS
37. TKS SYSTEM (N46)
38. SPARE-ELECT (AMBER)
39. SPARE FUEL (AMBER)
40. SPARE-SYSTEM CAPT OUT
41. CONTROL SURFACES OUT OF TRIM (N93)
42. SPARE (RED)

25-8NA5-351 SH 3
DWG ISS -2

ART ID # HA00F9909114AA

IDENT	PART NUMBER	1234567 NOMENCLATURE	EFFECT FROM TO	UNITS PER ASSY
		MASTER WARNING SYSTEM	091109	
	25-8NA5-351	WIRING DIAGRAM- (MOD 253149C)		RF
A-CC	6A43	.SWITCH- (V91929) (OPT (VK6596)) (USED WITH BASE: 2D70)		1
B-CY	25-8NF615-3A	.ANNUNCIATOR		1
B-S1-DAL	25-6NF693-3A	.PRINTED CIRCUIT BOARD- TYPE B		1
B-S3-DAL	25-6NF693-3A	.PRINTED CIRCUIT BOARD- TYPE B		1
B-S5-DAL	25-6NF693-3A	.PRINTED CIRCUIT BOARD- TYPE B		1
B-S6-DAL	25-6NF693-3A	.PRINTED CIRCUIT BOARD- TYPE B		1
B24-DAD	483TCG11J25-1A	.CIRCUIT BREAKER-1A (VU0091)		1
B33-DAD	483TCG11J25-5A	.CIRCUIT BREAKER-5A (VU0091)		1
B34-DAD	483TCG11J25-1A	.CIRCUIT BREAKER-1A (VU0091)		1
C-Z-DAE	MJE2955	.TRANSISTOR- (VK5519) (USED ON HEATSINK: 25-8NF205-503A)		1
CC1-P	BAEREF000003123	.CONNECTOR-SOCKET (6027-20-41SNCONDB) (VK1793)		1
CC1-R	6026-20-41PN	.CONNECTOR-PIN (VK4161) (OPT 6026-20-41PNCONDB) (VK1793)		1
CC3-P	BAEREF000003123	.CONNECTOR-SOCKET (6027-20-41SNCONDB) (VK1793)		1
CC3-R	6026-20-41PN	.CONNECTOR-PIN (VK4161) (OPT 6026-20-41PNC8) (V71468) (OPT (VK0316)) (OPT 6026-20-41PNCONDB) (VK1793)		1
CD1-P	BAEREF000003145	.CONNECTOR-SOCKET (6027-14-19SNCONDB) (VK1793)		1
CD1-R	BAEREF000003143	.CONNECTOR-PIN (6026-14-19PNCONDB) (VK1793)		1
		MISSING ITEM NO. NOT APPLICABLE		

– ITEM NOT ILLUSTRATED

IDENT	PART NUMBER	1234567 NOMENCLATURE	EFFECT FROM TO	UNITS PER ASSY
CG6-P	MTC100YH2-009	.SHELL-PLUG (VK1010) (USED WITH WAFERS: TYPE A, MTC100KT2-1101 TYPE B, MTC100KT2-1102)		1
CG6-R	MTC100YH2-010	.SHELL-RECEPTACLE (VK1010) (USED WITH WAFERS: TYPE A, MTC100KT2-1103 TYPE B, MTC100KT2-1104)		1
CG7-P	MTC100YH2-009	.SHELL-PLUG (VK1010) (USED WITH WAFERS: TYPE A, MTC100KT2-1101 TYPE B, MTC100KT2-1102)		1
CG7-R	MTC100YH2-010	.SHELL-RECEPTACLE (VK1010) (USED WITH WAFERS: TYPE A, MTC100KT2-1103 TYPE B, MTC100KT2-1104)		1
CY1-P	MTC100YH2-009	.SHELL-PLUG (VK1010) (USED WITH WAFERS: TYPE A, MTC100KT2-1103 TYPE B, MTC100KT2-1104)		1
CY1-R	MTC100YH2-010	.SHELL-RECEPTACLE (VK1010) (USED WITH WAFERS: TYPE A, MTC100KT2-1101 TYPE B, MTC100KT2-1102)		1
D-Z-DAE	MJE2955	.TRANSISTOR- (VK5519) (USED ON HEATSINK: 25-8NF205-503A)		1
DA-CC	C9032-001B	.LAMP MODULE- (VK0673)		1
DA14-P	MTC100YH1-003	.SHELL-PLUG (VK1010) (USED WITH WAFERS: TYPE A, MTC100KT1-1101 TYPE B, MTC100KT1-1102)		1
DA14-R	MTC100YH1-004	.SHELL-RECEPTACLE (VK1010) (USED WITH WAFERS: TYPE A, MTC100KT1-1103 TYPE B, MTC100KT1-1104)		1
		MISSING ITEM NO. NOT APPLICABLE		

- ITEM NOT ILLUSTRATED

IDENT	PART NUMBER	1234567 NOMENCLATURE	EFFECT FROM TO	UNITS PER ASSY
DA15-P	MTC100YH1-003	.SHELL-PLUG (VK1010) (USED WITH WAFERS: TYPE A, MTC100KT1-1101 TYPE B, MTC100KT1-1102)		1
DA15-R	MTC100YH1-004	.SHELL-RECEPTACLE (VK1010) (USED WITH WAFERS: TYPE A, MTC100KT1-1103 TYPE B, MTC100KT1-1104)		1
DA16-P	MTC100YH1-003	.SHELL-PLUG (VK1010) (USED WITH WAFERS: TYPE A, MTC100KT1-1101 TYPE B, MTC100KT1-1102)		1
DA16-R	MTC100YH1-004	.SHELL-RECEPTACLE (VK1010) (USED WITH WAFERS: TYPE A, MTC100KT1-1103 TYPE B, MTC100KT1-1104)		1
DA17-P	MTC100YH1-003	.SHELL-PLUG (VK1010) (USED WITH WAFERS: TYPE A, MTC100KT1-1101 DUMMY, MTCX1X100-100)		1
DA17-R	MTC100YH1-004	.SHELL-RECEPTACLE (VK1010) (USED WITH WAFERS: TYPE A, MTC100KT1-1103 DUMMY, MTCX1X100-100)		1
DA18-P	MTC100YH1-003	.SHELL-PLUG (VK1010) (USED WITH WAFERS: TYPE A, MTC100KT1-1101 DUMMY, MTCX1X100-100)		1
DA18-R	MTC100YH1-004	.SHELL-RECEPTACLE (VK1010) (USED WITH WAFERS: TYPE A, MTC100KT1-1103 DUMMY, MTCX1X100-100)		1
DA24-P	MTC100YH1-003	.SHELL-PLUG (VK1010) (USED WITH WAFERS: TYPE A, MTC100KT1-1101 TYPE B, MTC100KT1-1102)		1
DA24-R	MTC100YH1-004	.SHELL-RECEPTACLE (VK1010) (USED WITH WAFERS: TYPE A, MTC100KT1-1103 TYPE B, MTC100KT1-1104)		1
		MISSING ITEM NO. NOT APPLICABLE		

– ITEM NOT ILLUSTRATED

IDENT	PART NUMBER	1234567 NOMENCLATURE	EFFECT FROM TO	UNITS PER ASSY
DA25-P	MTC100YH1-003	.SHELL-PLUG (VK1010) (USED WITH WAFERS: TYPE A, MTC100KT1-1101 TYPE B, MTC100KT1-1102)		1
DA25-R	MTC100YH1-004	.SHELL-RECEPTACLE (VK1010) (USED WITH WAFERS: TYPE A, MTC100KT1-1103 TYPE B, MTC100KT1-1104)		1
DA26-P	MTC100YH1-003	.SHELL-PLUG (VK1010) (USED WITH WAFERS: TYPE A, MTC100KT1-1101 TYPE B, MTC100KT1-1102)		1
DA26-R	MTC100YH1-004	.SHELL-RECEPTACLE (VK1010) (USED WITH WAFERS: TYPE A, MTC100KT1-1103 TYPE B, MTC100KT1-1104)		1
DA27-P	MTC100YH1-003	.SHELL-PLUG (VK1010) (USED WITH WAFERS: TYPE A, MTC100KT1-1101 TYPE B, MTC100KT1-1102)		1
DA27-R	MTC100YH1-004	.SHELL-RECEPTACLE (VK1010) (USED WITH WAFERS: TYPE A, MTC100KT1-1103 TYPE B, MTC100KT1-1104)		1
DA30-P	MTC100YH1-003	.SHELL-PLUG (VK1010) (USED WITH WAFERS: TYPE A, MTC100KT1-1101 DUMMY, MTCX1X100-100)		1
DA30-R	MTC100YH1-004	.SHELL-RECEPTACLE (VK1010) (USED WITH WAFERS: TYPE A, MTC100KT1-1103 DUMMY, MTCX1X100-100)		1
DA31-P	MTC100YH2-009	.SHELL-PLUG (VK1010) (USED WITH WAFERS: TYPE A, MTC100KT2-1101 TYPE B, MTC100KT2-1102)		1
DA31-R	MTC100YH2-010	.SHELL-RECEPTACLE (VK1010) (USED WITH WAFERS: TYPE A, MTC100KT2-1103 TYPE B, MTC100KT2-1104)		1
		MISSING ITEM NO. NOT APPLICABLE		

– ITEM NOT ILLUSTRATED

IDENT	PART NUMBER	1234567 NOMENCLATURE	EFFECT FROM TO	UNITS PER ASSY
DA33-P	MTC100YH2-009	.SHELL-PLUG (VK1010) (USED WITH WAFERS: TYPE A, MTC100KT2-1101 TYPE B, MTC100KT2-1102)		1
DA33-R	MTC100YH2-010	.SHELL-RECEPTACLE (VK1010) (USED WITH WAFERS: TYPE A, MTC100KT2-1103 TYPE B, MTC100KT2-1104)		1
DB-CC	C9032-001B	.LAMP MODULE- (VK0673)		1
DC-CC	C9032-001B	.LAMP MODULE- (VK0673)		1
DD-CC	C9032-001B	.LAMP MODULE- (VK0673)		1
DE-CC	C9032-001B	.LAMP MODULE- (VK0673)		1
DF-CC	C9032-001B	.LAMP MODULE- (VK0673)		1
DG-CC	C9032-001B	.LAMP MODULE- (VK0673)		1
DH-CC	C9032-001B	.LAMP MODULE- (VK0673)		1
DJ-CC	C9032-001B	.LAMP MODULE- (VK0673)		1
DK-CC	C9032-001B	.LAMP MODULE- (VK0673)		1
DL-CC	C9032-001B	.LAMP MODULE- (VK0673)		1
DM-CC	C9032-001B	.LAMP MODULE- (VK0673)		1
DN-CC	C9032-001B	.LAMP MODULE- (VK0673)		1
DP-CC	C9032-001B	.LAMP MODULE- (VK0673)		1
DR-CC	C9032-001B	.LAMP MODULE- (VK0673)		1
DS-CC	C9032-001B	.LAMP MODULE- (VK0673)		1
DT-CC	C9032-001B	.LAMP MODULE- (VK0673)		1
EA-CC	C9032-001B	.LAMP MODULE- (VK0673)		1
EB-CC	C9032-001B	.LAMP MODULE- (VK0673)		1
EC-CC	C9032-001B	.LAMP MODULE- (VK0673)		1
ED-CC	C9032-001B	.LAMP MODULE- (VK0673)		1
		MISSING ITEM NO. NOT APPLICABLE		

– ITEM NOT ILLUSTRATED

IDENT	PART NUMBER	1234567 NOMENCLATURE	EFFECT FROM TO	UNITS PER ASSY
EE-CC	C9032-001B	.LAMP MODULE- (VK0673)		1
EF-CC	C9032-001B	.LAMP MODULE- (VK0673)		1
EF-DAJ	5910-99-0124911	.CAPACITOR- (VK1672)		1
EG-CC	C9032-001B	.LAMP MODULE- (VK0673)		1
EG-DAJ	5910-99-0124911	.CAPACITOR- (VK1672)		1
EH-CC	C9032-001B	.LAMP MODULE- (VK0673)		1
EJ-CC	C9032-001B	.LAMP MODULE- (VK0673)		1
EK-CC	C9032-001B	.LAMP MODULE- (VK0673)		1
EL-CC	C9032-001B	.LAMP MODULE- (VK0673)		1
EM-CC	C9032-001B	.LAMP MODULE- (VK0673)		1
EN-CC	C9032-001B	.LAMP MODULE- (VK0673)		1
EP-CC	C9032-001B	.LAMP MODULE- (VK0673)		1
ER-CC	C9032-001B	.LAMP MODULE- (VK0673)		1
ET-CC	C9032-001B	.LAMP MODULE- (VK0673)		1
F-CY	25-8NF615-1A	.ANNUNCIATOR		1
FB-CG	C9032-001B	.LAMP MODULE- (VK0673)		1
FC-CG	C9032-001B	.LAMP MODULE- (VK0673)		1
FD-CG	C9032-001B	.LAMP MODULE- (VK0673)		1
FE-CG	C9032-001B	.LAMP MODULE- (VK0673)		1
G-S10-DAL	25-6NF1909A	.PRINTED CIRCUIT BOARD- TYPE G		1
GB-CG	C9032-001B	.LAMP MODULE- (VK0673)		1
GC-CG	C9032-001B	.LAMP MODULE- (VK0673)		1
GD-CG	C9032-001B	.LAMP MODULE- (VK0673)		1
GF-CG	C9032-001B	.LAMP MODULE- (VK0673)		1
GG-CG	C9032-001B	.LAMP MODULE- (VK0673)		1
		MISSING ITEM NO. NOT APPLICABLE		

– ITEM NOT ILLUSTRATED

IDENT	PART NUMBER	1234567 NOMENCLATURE	EFFECT FROM TO	UNITS PER ASSY
GH-CG	C9032-001B	.LAMP MODULE- (VK0673)		1
GK-CG	C9032-001B	.LAMP MODULE- (VK0673)		1
GL-CG	C9032-001B	.LAMP MODULE- (VK0673)		1
GM-CG	C9032-001B	.LAMP MODULE- (VK0673)		1
GR-CG	C9032-001B	.LAMP MODULE- (VK0673)		1
GS-CG	C9032-001B	.LAMP MODULE- (VK0673)		1
GT-CG	C9032-001B	.LAMP MODULE- (VK0673)		1
GU-CG	C9032-001B	.LAMP MODULE- (VK0673)		1
H-S11-DAL	25-8NF761-41A	.PRINTED CIRCUIT BOARD- TYPE H		1
HB-CG	C9032-001B	.LAMP MODULE- (VK0673)		1
HC-CG	C9032-001B	.LAMP MODULE- (VK0673)		1
HD-CG	C9032-001B	.LAMP MODULE- (VK0673)		1
HF-CG	C9032-001B	.LAMP MODULE- (VK0673)		1
HG-CG	C9032-001B	.LAMP MODULE- (VK0673)		1
HH-CG	C9032-001B	.LAMP MODULE- (VK0673)		1
HK-CG	C9032-001B	.LAMP MODULE- (VK0673)		1
HL-CG	C9032-001B	.LAMP MODULE- (VK0673)		1
HM-CG	C9032-001B	.LAMP MODULE- (VK0673)		1
HP-CG	C9032-001B	.LAMP MODULE- (VK0673)		1
HR-CG	C9032-001B	.LAMP MODULE- (VK0673)		1
HS-CG	C9032-001B	.LAMP MODULE- (VK0673)		1
HT-CG	C9032-001B	.LAMP MODULE- (VK0673)		1
HU-CG	C9032-001B	.LAMP MODULE- (VK0673)		1
HV-CG	C9032-001B	.LAMP MODULE- (VK0673)		1
HX-CG	C9032-001B	.LAMP MODULE- (VK0673)		1
		MISSING ITEM NO. NOT APPLICABLE		

– ITEM NOT ILLUSTRATED

IDENT	PART NUMBER	1234567 NOMENCLATURE	EFFECT FROM TO	UNITS PER ASSY
J-S2-DAL	25-6NF693-41A	.PRINTED CIRCUIT BOARD- TYPE J (UNIT EXCHANGE ITEM)		1
JU-CG	C9032-001B	.LAMP MODULE- (VK0673)		1
JV-CG	C9032-001B	.LAMP MODULE- (VK0673)		1
JX-CG	C9032-001B	.LAMP MODULE- (VK0673)		1
K-S7-DAL	25-7NF785-51A	.PRINTED CIRCUIT BOARD- TYPE K		1
L-S8-DAL	25-7NF785-53A	.PRINTED CIRCUIT BOARD- TYPE L		1
L-S9-DAL	25-7NF785-53A	.PRINTED CIRCUIT BOARD- TYPE L		1
M-CC	6AT4	.SWITCH- (V91929) (OPT (VK6596))		1
Q-CC	140-4537	.POTENTIOMETER- (VK1021)		1
S-DAE	25-8NF405-503A	.HEAT SINK ASSY- (COMPRISING: TERMINAL BLOCK HWBUN1736S10B (VK0574))		1
S-S4-DAL	25-8NF355-17A	.PRINTED CIRCUIT BOARD- TYPE S		1
S1-DAL-R	225-22811-201	.CONNECTOR-PCB (VK1100)		1
S10-DAL-R	225-22811-201	.CONNECTOR-PCB (VK1100)		1
S11-DAL-R	225-22811-201	.CONNECTOR-PCB (VK1100)		1
S2-DAL-R	225-22811-201	.CONNECTOR-PCB (VK1100)		1
S3-DAL-R	225-22811-201	.CONNECTOR-PCB (VK1100)		1
S4-DAL-R	225-22811-201	.CONNECTOR-PCB (VK1100)		1
S5-DAL-R	225-22811-201	.CONNECTOR-PCB (VK1100)		1
S6-DAL-R	225-22811-201	.CONNECTOR-PCB (VK1100)		1
S7-DAL-R	225-22811-201	.CONNECTOR-PCB (VK1100)		1
S8-DAL-R	225-22811-201	.CONNECTOR-PCB (VK1100)		1
S9-DAL-R	225-22811-201	.CONNECTOR-PCB (VK1100)		1
		MISSING ITEM NO. NOT APPLICABLE		

– ITEM NOT ILLUSTRATED

IDENT	PART NUMBER	1234567 NOMENCLATURE	EFFECT FROM TO	UNITS PER ASSY
T-CD	HWBUN1736D6B	.TERMINAL BLOCK- (VK0574)		1
TB-DAJ	HWBUN1146D10B	.TERMINAL BLOCK- (VK0574)		1
V-CD	99-630	.INDICATOR- (V32245)		1
Y	HWBUN1736D10B	.TERMINAL BLOCK- (VK0574)		1
Z-DAE	25-8NF205-503A	.HEATSINK ASSY- (COMPRISING: TRANSISTORS MJE2955 (VK5519) TERMINAL BLOCK HWBUN1736S10B (VK0574))		1
		MISSING ITEM NO. NOT APPLICABLE		

– ITEM NOT ILLUSTRATED

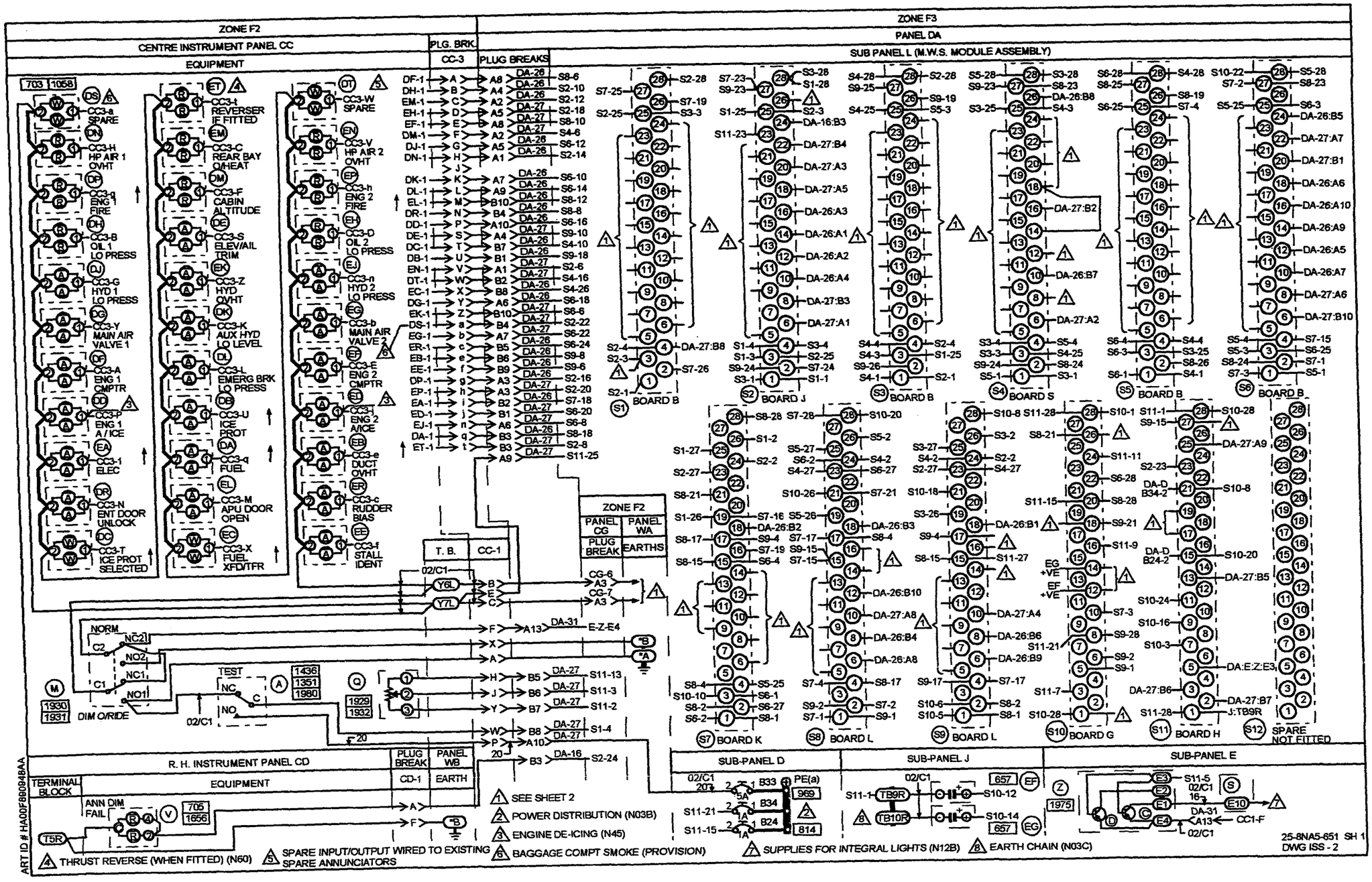
ZONE F2
CENTRE INSTRUMENT PANEL CC
EQUIPMENT
PLG. BRK.
CC-3
PLUG BREAKS
ZONE F3
PANEL DA
SUB PANEL L (M.W.S. MODULE ASSEMBLY)
CC3-a SPARE
CC3-H HP AIR 1 OVHT
CC3-q ENG FIRE
CC3-B OIL 1 LO PRESS
CC3-G HYD 1 LO PRESS
CC3-Y MAIN AIR VALVE 1
CC3-A ENG 1 CMPTR
CC3-P ENG 1 A/ICE
CC3-1 ELEC
CC3-N ENT DOOR UNLOCK
CC3-T ICE PROT SELECTED
CC3-t REVERSER IF FITTED
CC3-C REAR BAY O/HEAT
CC3-F CABIN ALTITUDE
CC3-S ELEV/AIL TRIM
CC3-Z HYD OVHT
CC3-K AUX HYD LO LEVEL
CC3-L EMERG BRK LO PRESS
CC3-U ICE PROT
CC3-q FUEL
CC3-M APU DOOR OPEN
CC3-X FUEL XFD/TFR
CC3-W SPARE
CC3-V HP AIR 2 OVHT
CC3-h ENG 2 FIRE
CC3-D OIL 2 LO PRESS
CC3-n HYD 2 LO PRESS
CC3-b MAIN AIR VALVE 2
CC3-E ENG 2 CMPTR
CC3-1 ENG 2 A/ICE
CC3-e DUCT OVHT
CC3-c RUDDER BIAS
CC3-f STALL IDENT
T. B.
CC-1
ZONE F2
PANEL CG
PANEL WA
PLUG BREAK
EARTHS
NORM
TEST
DIM O/RIDE
BOARD B
BOARD J
BOARD B
BOARD S
BOARD B
BOARD B
BOARD K
BOARD L
BOARD L
BOARD G
BOARD H
SPARE NOT FITTED
R. H. INSTRUMENT PANEL CD
EQUIPMENT
PLUG BREAK
CD-1
PANEL WB
EARTH
TERMINAL BLOCK
ANN DIM FAIL
SUB-PANEL D
SUB-PANEL J
SUB-PANEL E
SEE SHEET 2
POWER DISTRIBUTION (N03B)
ENGINE DE-ICING (N45)
THRUST REVERSE (WHEN FITTED) (N60)
SPARE INPUT/OUTPUT WIRED TO EXISTING SPARE ANNUNCIATORS
BAGGAGE COMPT SMOKE (PROVISION)
SUPPLIES FOR INTEGRAL LIGHTS (N12B)
EARTH CHAIN (N03C)
25-8NA5-651 SH 1
DWG ISS - 2
ART ID # HA00F880948AA

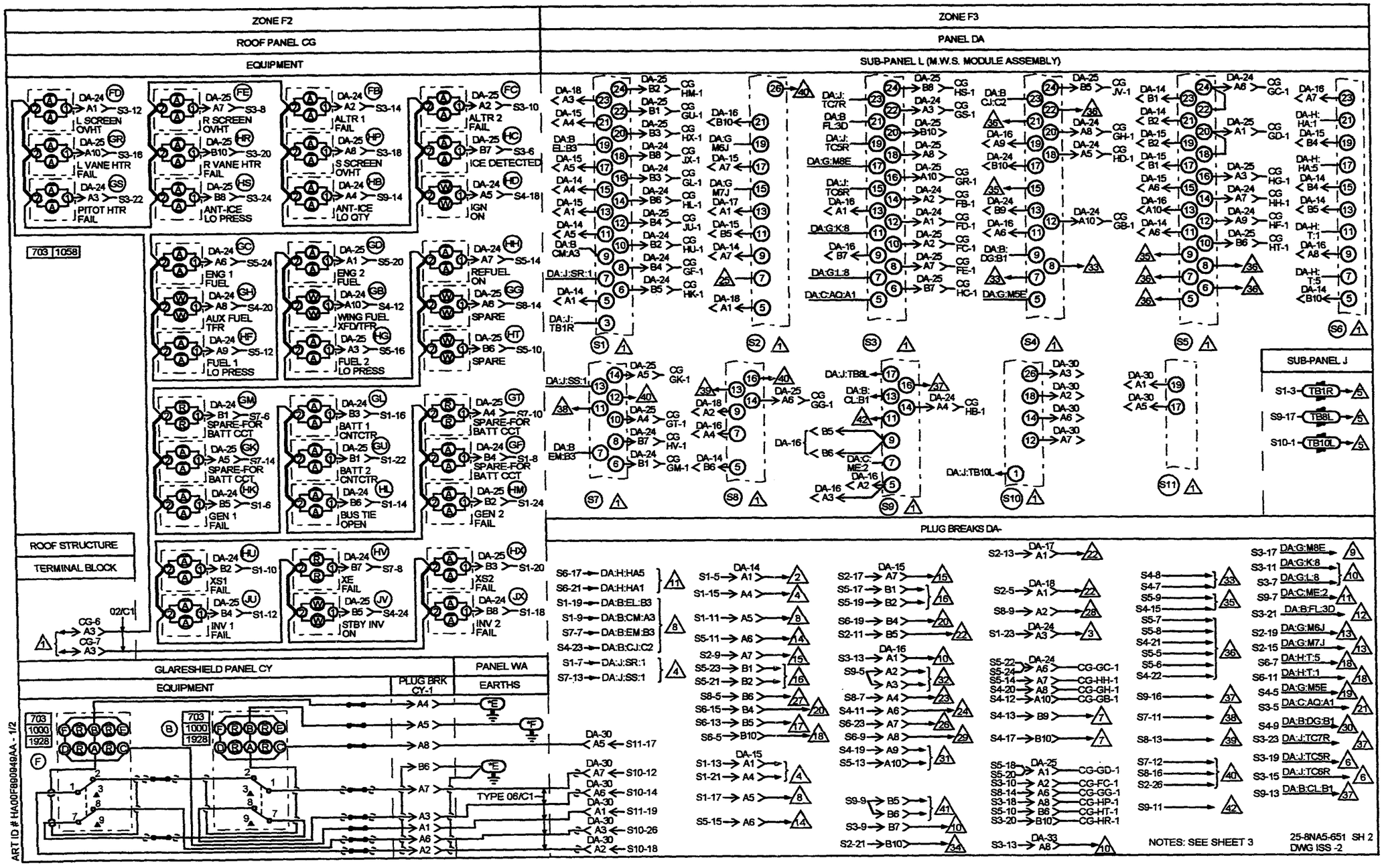
ZONE F2
ROOF PANEL CG
EQUIPMENT
ZONE F3
PANEL DA
SUB-PANEL L (M.W.S. MODULE ASSEMBLY)
L SCREEN OVHT
L VANE HTR FAIL
PITOT HTR FAIL
R SCREEN OVHT
R VANE HTR FAIL
ANT-ICE LO PRESS
ALTR 1 FAIL
S SCREEN OVHT
ANT-ICE LO QTY
ALTR 2 FAIL
ICE DETECTED
IGN ON
ENG 1 FUEL
AUX FUEL TFR
FUEL 1 LO PRESS
ENG 2 FUEL
WING FUEL XFD/TFR
FUEL 2 LO PRESS
REFUEL ON
SPARE
SPARE-FOR BATT CCT
GEN 1 FAIL
BATT 1 CNTCTR
BATT 2 CNTCTR
BUS TIE OPEN
GEN 2 FAIL
XS1 FAIL
INV 1 FAIL
XE FAIL
STBY INV ON
XS2 FAIL
INV 2 FAIL
ROOF STRUCTURE
TERMINAL BLOCK
SUB-PANEL J
PLUG BREAKS DA-
GLARESHIELD PANEL CY
EQUIPMENT
PLUG BRK CY-1
PANEL WA
EARTHS
TYPE 06/C1
NOTES: SEE SHEET 3
25-8NA5-651 SH 2
DWG ISS -2
ART ID # HA00F890949AA - 1/2

SUB-PANEL L M.V.S. MODULE DETAILS							
R/CHART SOCKET REF	INPUT CCT BOARD REF	R/CHART SOCKET REF	INPUT CCT BOARD REF	R/CHART SOCKET REF	INPUT CCT BOARD REF	R/CHART SOCKET REF	INPUT CCT BOARD REF
S1	B	S7	K	S10	G	S11	H
S2	J	S8	L				
S3	B	S9	L				
S4	S						
S5	B						
S6	B						

PIN	DESIGNATION	DESIGNATION	DESIGNATION	DESIGNATION
1	RED TRIGGER	TRIGGER CIRCUITS	EARTH 2	EARTH 1
2	AMBER/WHITE TRIGGER		———	DIM LO
3	EARTH		AMBER LATCH	DIM CT
4	28V TEST SUPPLY	EARTH	———	———
5	I/P 1	I/P 1	AMBER TRIGGER	DIM CONTROL
6	O/P	O/P		———
7	I/P 2	I/P 2	———	AMBER LATCH
8	O/P	O/P	28V SUPPLY 2	———
9	I/P 3	I/P 3	———	RED LATCH 2
10	O/P	O/P	RED TRIGGER	———
11	I/P 4	I/P 4	———	RED LATCH 1
12	O/P	O/P	CANCEL 2	———
13	I/P 5	I/P 5	———	DIM HI
14	O/P	O/P	CANCEL 1	———
15	I/P 6	+28V TEST	———	SUPPLY 1
16	O/P	REPEATER O/P	RED LATCH 2	———
17	I/P 7	EARTH 2	———	FLASHER 1
18	O/P	REPEATER OUT	CANCEL 3	———
19	I/P 8	REPEATER IN	———	FLASHER 2
20	O/P	———	28V SUPPLY 2	———
21	I/P 9	CANCEL 3	———	SUPPLY 2
22	O/P	———	RED TRIGGER	———
23	I/P 10	AMBER TRIGGER OUT	———	ANN DIM FAIL
24	O/P		RED LATCH 1	———
25	EARTH	AMBER TRIGGER IN	———	DIM SENSE
26	REPEATER O/P		CANCEL 4	———
27	AMBER/WHITE TRIGGER	———	———	TEST
28	RED TRIGGER	28V SUPPLY 2	EARTH 1	EARTH 2

NOTE : FOR CIRCUIT DIAGRAM OF M.W.S. INPUT & CONTROL BOARDS SEE DRGS REF:

25-6NF693-3A	BOARD B
25-6NF1909	BOARD G
25-6NF693-41A	BOARD J
25-7NF785-53A	BOARD L
25-8NF761-1A	BOARD H
25-7NF785-51A	BOARD K
25-8NF355-1A	BOARD Y
25-8NF355-17A	BOARD S

1. SEE SHEET 1
2. D.C. POWER SYSTEM (N01A)
3. D.C. POWER SYSTEM (N01B)
4. D.C. POWER DISTRIBUTION (N03A)
5. EARTH CHAIN (N03C)
6. STALL VANE HEAT (N25C)
7. ENGINE START & IGNITION (N04)
8. SECONDARY PWR SUPPLY (N05)
9. "B" WINDOW DE-ICE (N20B)
10. WINDSCREEN DE-ICE (N20)
11. CABIN AIR TEMP CONTROL (N24)
12. PITOT HEATER (N25)
13. FIRE DETECTION (N27)
14. FUEL PRESSURE (N29)
15. OIL PRESSURE & TEMP (N30)
16. FUEL FILTER DE-ICE (N32)
17. BRAKE PRESSURE (N39)
18. HYD SYSTEMS INDRS (N42)
19. CABIN DEPRESSN (N44)
20. ENGINE DE-ICING (N45)
21. ICE DETECTION (N47)
22. REAR BAY O/HEAT (N54)
23. ENTRY DOOR WARNING (N57)
24. TFR FUEL COCK WARNG (N58)
25. THRUST RVRS IF FITTED (N60)
26. RUDDER BIAS (N62)
27. FUEL COMPUTER No.1 (N63A)
28. FUEL COMPUTER No.2 (N63B)
29. EMERG HYD LO LEVEL (N79)
30. ENG IDLE SPEED CONTRL (N63C)
31. LONG RNG FUEL SYST (N90A&B)
32. STALL IDENT SYSTEM (N55)
33. PASSENGER OXYGEN PROVISION
34. BAGGAGE CPT SMOKE PROVISION
35. SPARE I/O WIRED TO SPARE ANNUNCIATORS
36. SPARE I/O NOT WIRED TO ANNUNCIATORS
37. TKS SYSTEM (N46)
38. SPARE-ELECT (AMBER)
39. SPARE FUEL (AMBER)
40. SPARE-SYSTEM CAPT OUT
41. CONTROL SURFACES OUT OF TRIM (N93)
42. SPARE (RED)

25-8NA5-651 SH 3
DWG ISS - 1

ART ID # HA00FB80950AA

IDENT	PART NUMBER	1234567 NOMENCLATURE	EFFECT FROM TO	UNITS PER ASSY
		MASTER WARNING SYSTEM	110112 114123 125143 145151	
	25-8NA5-651	WIRING DIAGRAM- (MOD 253187A)		RF
A-CC	6A43	.SWITCH- (V91929) (OPT (VK6596)) (USED WITH BASE: 2D70)		1
B-CY	25-8NF615-3A	.ANNUNCIATOR		1
B-S1-DAL	25-6NF693-3A	.PRINTED CIRCUIT BOARD- TYPE B		1
B-S3-DAL	25-6NF693-3A	.PRINTED CIRCUIT BOARD- TYPE B		1
B-S5-DAL	25-6NF693-3A	.PRINTED CIRCUIT BOARD- TYPE B		1
B-S6-DAL	25-6NF693-3A	.PRINTED CIRCUIT BOARD- TYPE B		1
B24-DAD	483TCG11J25-1A	.CIRCUIT BREAKER-1A (VU0091)		1
B33-DAD	483TCG11J25-5A	.CIRCUIT BREAKER-5A (VU0091)		1
B34-DAD	483TCG11J25-1A	.CIRCUIT BREAKER-1A (VU0091)		1
C-Z-DAE	MJE2955	.TRANSISTOR- (VK5519) (USED ON HEATSINK: 25-8NF205-503A)		1
CC1-P	BAEREF000003123	.CONNECTOR-SOCKET (6027-20-41SNCONDB) (VK1793)		1
CC1-R	6026-20-41PN	.CONNECTOR-PIN (VK4161) (OPT 6026-20-41PNCONDB) (VK1793)		1
CC3-P	BAEREF000003123	.CONNECTOR-SOCKET (6027-20-41SNCONDB) (VK1793)		1
CC3-R	6026-20-41PN	.CONNECTOR-PIN (VK4161) (OPT 6026-20-41PNC8) (V71468) (OPT (VK0316)) (OPT 6026-20-41PNCONDB) (VK1793)		1
CD1-P	BAEREF000003145	.CONNECTOR-SOCKET (6027-14-19SNCONDB) (VK1793)		1
		MISSING ITEM NO. NOT APPLICABLE		

- ITEM NOT ILLUSTRATED

IDENT	PART NUMBER	1234567 NOMENCLATURE	EFFECT FROM TO	UNITS PER ASSY
CD1-R	BAEREF000003143	.CONNECTOR-PIN (6026-14-19PNCONDB) (VK1793)		1
CG6-P	MTC100YH2-009	.SHELL-PLUG (VK1010) (USED WITH WAFERS: TYPE A, MTC100KT2-1101 TYPE B, MTC100KT2-1102)		1
CG6-R	MTC100YH2-010	.SHELL-RECEPTACLE (VK1010) (USED WITH WAFERS: TYPE A, MTC100KT2-1103 TYPE B, MTC100KT2-1104)		1
CG7-P	MTC100YH2-009	.SHELL-PLUG (VK1010) (USED WITH WAFERS: TYPE A, MTC100KT2-1101 TYPE B, MTC100KT2-1102)		1
CG7-R	MTC100YH2-010	.SHELL-RECEPTACLE (VK1010) (USED WITH WAFERS: TYPE A, MTC100KT2-1103 TYPE B, MTC100KT2-1104)		1
CY1-P	MTC100YH2-009	.SHELL-PLUG (VK1010) (USED WITH WAFERS: TYPE A, MTC100KT2-1103 TYPE B, MTC100KT2-1104)		1
CY1-R	MTC100YH2-010	.SHELL-RECEPTACLE (VK1010) (USED WITH WAFERS: TYPE A, MTC100KT2-1101 TYPE B, MTC100KT2-1102)		1
D-Z-DAE	MJE2955	.TRANSISTOR- (VK5519) (USED ON HEATSINK: 25-8NF205-503A)		1
DA-CC	C9032-001B	.LAMP MODULE- (VK0673)		1
DA14-P	MTC100YH1-003	.SHELL-PLUG (VK1010) (USED WITH WAFERS: TYPE A, MTC100KT1-1101 TYPE B, MTC100KT1-1102)		1
DA14-R	MTC100YH1-004	.SHELL-RECEPTACLE (VK1010) (USED WITH WAFERS: TYPE A, MTC100KT1-1103 TYPE B, MTC100KT1-1104)		1
		MISSING ITEM NO. NOT APPLICABLE		

– ITEM NOT ILLUSTRATED

IDENT	PART NUMBER	1234567 NOMENCLATURE	EFFECT FROM TO	UNITS PER ASSY
DA15-P	MTC100YH1-003	.SHELL-PLUG (VK1010) (USED WITH WAFERS: TYPE A, MTC100KT1-1101 TYPE B, MTC100KT1-1102)		1
DA15-R	MTC100YH1-004	.SHELL-RECEPTACLE (VK1010) (USED WITH WAFERS: TYPE A, MTC100KT1-1103 TYPE B, MTC100KT1-1104)		1
DA16-P	MTC100YH1-003	.SHELL-PLUG (VK1010) (USED WITH WAFERS: TYPE A, MTC100KT1-1101 TYPE B, MTC100KT1-1102)		1
DA16-R	MTC100YH1-004	.SHELL-RECEPTACLE (VK1010) (USED WITH WAFERS: TYPE A, MTC100KT1-1103 TYPE B, MTC100KT1-1104)		1
DA17-P	MTC100YH1-003	.SHELL-PLUG (VK1010) (USED WITH WAFERS: TYPE A, MTC100KT1-1101 DUMMY, MTCX1X100-100)		1
DA17-R	MTC100YH1-004	.SHELL-RECEPTACLE (VK1010) (USED WITH WAFERS: TYPE A, MTC100KT1-1103 DUMMY, MTCX1X100-100)		1
DA18-P	MTC100YH1-003	.SHELL-PLUG (VK1010) (USED WITH WAFERS: TYPE A, MTC100KT1-1101 DUMMY, MTCX1X100-100)		1
DA18-R	MTC100YH1-004	.SHELL-RECEPTACLE (VK1010) (USED WITH WAFERS: TYPE A, MTC100KT1-1103 DUMMY, MTCX1X100-100)		1
DA24-P	MTC100YH1-003	.SHELL-PLUG (VK1010) (USED WITH WAFERS: TYPE A, MTC100KT1-1101 TYPE B, MTC100KT1-1102)		1
DA24-R	MTC100YH1-004	.SHELL-RECEPTACLE (VK1010) (USED WITH WAFERS: TYPE A, MTC100KT1-1103 TYPE B, MTC100KT1-1104)		1
		MISSING ITEM NO. NOT APPLICABLE		

– ITEM NOT ILLUSTRATED

IDENT	PART NUMBER	1234567 NOMENCLATURE	EFFECT FROM TO	UNITS PER ASSY
DA25-P	MTC100YH1-003	.SHELL-PLUG (VK1010) (USED WITH WAFERS: TYPE A, MTC100KT1-1101 TYPE B, MTC100KT1-1102)		1
DA25-R	MTC100YH1-004	.SHELL-RECEPTACLE (VK1010) (USED WITH WAFERS: TYPE A, MTC100KT1-1103 TYPE B, MTC100KT1-1104)		1
DA26-P	MTC100YH1-003	.SHELL-PLUG (VK1010) (USED WITH WAFERS: TYPE A, MTC100KT1-1101 TYPE B, MTC100KT1-1102)		1
DA26-R	MTC100YH1-004	.SHELL-RECEPTACLE (VK1010) (USED WITH WAFERS: TYPE A, MTC100KT1-1103 TYPE B, MTC100KT1-1104)		1
DA27-P	MTC100YH1-003	.SHELL-PLUG (VK1010) (USED WITH WAFERS: TYPE A, MTC100KT1-1101 TYPE B, MTC100KT1-1102)		1
DA27-R	MTC100YH1-004	.SHELL-RECEPTACLE (VK1010) (USED WITH WAFERS: TYPE A, MTC100KT1-1103 TYPE B, MTC100KT1-1104)		1
DA30-P	MTC100YH1-003	.SHELL-PLUG (VK1010) (USED WITH WAFERS: TYPE A, MTC100KT1-1101 DUMMY, MTCX1X100-100)		1
DA30-R	MTC100YH1-004	.SHELL-RECEPTACLE (VK1010) (USED WITH WAFERS: TYPE A, MTC100KT1-1103 DUMMY, MTCX1X100-100)		1
DA31-P	MTC100YH2-009	.SHELL-PLUG (VK1010) (USED WITH WAFERS: TYPE A, MTC100KT2-1101 TYPE B, MTC100KT2-1102)		1
DA31-R	MTC100YH2-010	.SHELL-RECEPTACLE (VK1010) (USED WITH WAFERS: TYPE A, MTC100KT2-1103 TYPE B, MTC100KT2-1104)		1
		MISSING ITEM NO. NOT APPLICABLE		

– ITEM NOT ILLUSTRATED

IDENT	PART NUMBER	1234567 NOMENCLATURE	EFFECT FROM TO	UNITS PER ASSY
DA33-P	MTC100YH2-009	.SHELL-PLUG (VK1010) (USED WITH WAFERS: TYPE A, MTC100KT2-1101 TYPE B, MTC100KT2-1102)		1
DA33-R	MTC100YH2-010	.SHELL-RECEPTACLE (VK1010) (USED WITH WAFERS: TYPE A, MTC100KT2-1103 TYPE B, MTC100KT2-1104)		1
DB-CC	C9032-001B	.LAMP MODULE- (VK0673)		1
DC-CC	C9032-001B	.LAMP MODULE- (VK0673)		1
DD-CC	C9032-001B	.LAMP MODULE- (VK0673)		1
DE-CC	C9032-001B	.LAMP MODULE- (VK0673)		1
DF-CC	C9032-001B	.LAMP MODULE- (VK0673)		1
DG-CC	C9032-001B	.LAMP MODULE- (VK0673)		1
DH-CC	C9032-001B	.LAMP MODULE- (VK0673)		1
DJ-CC	C9032-001B	.LAMP MODULE- (VK0673)		1
DK-CC	C9032-001B	.LAMP MODULE- (VK0673)		1
DL-CC	C9032-001B	.LAMP MODULE- (VK0673)		1
DM-CC	C9032-001B	.LAMP MODULE- (VK0673)		1
DN-CC	C9032-001B	.LAMP MODULE- (VK0673)		1
DP-CC	C9032-001B	.LAMP MODULE- (VK0673)		1
DR-CC	C9032-001B	.LAMP MODULE- (VK0673)		1
DS-CC	C9032-001B	.LAMP MODULE- (VK0673)		1
DT-CC	C9032-001B	.LAMP MODULE- (VK0673)		1
EA-CC	C9032-001B	.LAMP MODULE- (VK0673)		1
EB-CC	C9032-001B	.LAMP MODULE- (VK0673)		1
EC-CC	C9032-001B	.LAMP MODULE- (VK0673)		1
ED-CC	C9032-001B	.LAMP MODULE- (VK0673)		1
		MISSING ITEM NO. NOT APPLICABLE		

– ITEM NOT ILLUSTRATED

IDENT	PART NUMBER	1234567 NOMENCLATURE	EFFECT FROM TO	UNITS PER ASSY
EE-CC	C9032-001B	.LAMP MODULE- (VK0673)		1
EF-CC	C9032-001B	.LAMP MODULE- (VK0673)		1
EF-DAJ	5910-99-0124911	.CAPACITOR- (VK1672)		1
EG-CC	C9032-001B	.LAMP MODULE- (VK0673)		1
EG-DAJ	5910-99-0124911	.CAPACITOR- (VK1672)		1
EH-CC	C9032-001B	.LAMP MODULE- (VK0673)		1
EJ-CC	C9032-001B	.LAMP MODULE- (VK0673)		1
EK-CC	C9032-001B	.LAMP MODULE- (VK0673)		1
EL-CC	C9032-001B	.LAMP MODULE- (VK0673)		1
EM-CC	C9032-001B	.LAMP MODULE- (VK0673)		1
EN-CC	C9032-001B	.LAMP MODULE- (VK0673)		1
EP-CC	C9032-001B	.LAMP MODULE- (VK0673)		1
ER-CC	C9032-001B	.LAMP MODULE- (VK0673)		1
ET-CC	C9032-001B	.LAMP MODULE- (VK0673)		1
F-CY	25-8NF615-1A	.ANNUNCIATOR		1
FB-CG	C9032-001B	.LAMP MODULE- (VK0673)		1
FC-CG	C9032-001B	.LAMP MODULE- (VK0673)		1
FD-CG	C9032-001B	.LAMP MODULE- (VK0673)		1
FE-CG	C9032-001B	.LAMP MODULE- (VK0673)		1
G-S10-DAL	25-6NF1909A	.PRINTED CIRCUIT BOARD- TYPE G		1
GB-CG	C9032-001B	.LAMP MODULE- (VK0673)		1
GC-CG	C9032-001B	.LAMP MODULE- (VK0673)		1
GD-CG	C9032-001B	.LAMP MODULE- (VK0673)		1
GF-CG	C9032-001B	.LAMP MODULE- (VK0673)		1
GG-CG	C9032-001B	.LAMP MODULE- (VK0673)		1
		MISSING ITEM NO. NOT APPLICABLE		

– ITEM NOT ILLUSTRATED

IDENT	PART NUMBER	1234567 NOMENCLATURE	EFFECT FROM TO	UNITS PER ASSY
GH-CG	C9032-001B	.LAMP MODULE- (VK0673)		1
GK-CG	C9032-001B	.LAMP MODULE- (VK0673)		1
GL-CG	C9032-001B	.LAMP MODULE- (VK0673)		1
GM-CG	C9032-001B	.LAMP MODULE- (VK0673)		1
GR-CG	C9032-001B	.LAMP MODULE- (VK0673)		1
GS-CG	C9032-001B	.LAMP MODULE- (VK0673)		1
GT-CG	C9032-001B	.LAMP MODULE- (VK0673)		1
GU-CG	C9032-001B	.LAMP MODULE- (VK0673)		1
H-S11-DAL	25-8NF761-41A	.PRINTED CIRCUIT BOARD- TYPE H		1
HB-CG	C9032-001B	.LAMP MODULE- (VK0673)		1
HC-CG	C9032-001B	.LAMP MODULE- (VK0673)		1
HD-CG	C9032-001B	.LAMP MODULE- (VK0673)		1
HF-CG	C9032-001B	.LAMP MODULE- (VK0673)		1
HG-CG	C9032-001B	.LAMP MODULE- (VK0673)		1
HH-CG	C9032-001B	.LAMP MODULE- (VK0673)		1
HK-CG	C9032-001B	.LAMP MODULE- (VK0673)		1
HL-CG	C9032-001B	.LAMP MODULE- (VK0673)		1
HM-CG	C9032-001B	.LAMP MODULE- (VK0673)		1
HP-CG	C9032-001B	.LAMP MODULE- (VK0673)		1
HR-CG	C9032-001B	.LAMP MODULE- (VK0673)		1
HS-CG	C9032-001B	.LAMP MODULE- (VK0673)		1
HT-CG	C9032-001B	.LAMP MODULE- (VK0673)		1
HU-CG	C9032-001B	.LAMP MODULE- (VK0673)		1
HV-CG	C9032-001B	.LAMP MODULE- (VK0673)		1
HX-CG	C9032-001B	.LAMP MODULE- (VK0673)		1
		MISSING ITEM NO. NOT APPLICABLE		

– ITEM NOT ILLUSTRATED

IDENT	PART NUMBER	1234567 NOMENCLATURE	EFFECT FROM TO	UNITS PER ASSY
J-S2-DAL	25-6NF693-41A	.PRINTED CIRCUIT BOARD- TYPE J (UNIT EXCHANGE ITEM)		1
JU-CG	C9032-001B	.LAMP MODULE- (VK0673)		1
JV-CG	C9032-001B	.LAMP MODULE- (VK0673)		1
JX-CG	C9032-001B	.LAMP MODULE- (VK0673)		1
K-S7-DAL	25-7NF785-51A	.PRINTED CIRCUIT BOARD- TYPE K		1
L-S8-DAL	25-7NF785-53A	.PRINTED CIRCUIT BOARD- TYPE L		1
L-S9-DAL	25-7NF785-53A	.PRINTED CIRCUIT BOARD- TYPE L		1
M-CC	6AT4	.SWITCH- (V91929) (OPT (VK6596))		1
Q-CC	140-4537	.POTENTIOMETER- (VK1021)		1
S-DAE	25-8NF405-503A	.HEAT SINK ASSY- (COMPRISING: TERMINAL BLOCK HWBUN1736S10B (VK0574))		1
S-S4-DAL	25-8NF355-17A	.PRINTED CIRCUIT BOARD- TYPE S		1
S1-DAL-R	225-22811-201	.CONNECTOR-PCB (VK1100)		1
S10-DAL-R	225-22811-201	.CONNECTOR-PCB (VK1100)		1
S11-DAL-R	225-22811-201	.CONNECTOR-PCB (VK1100)		1
S2-DAL-R	225-22811-201	.CONNECTOR-PCB (VK1100)		1
S3-DAL-R	225-22811-201	.CONNECTOR-PCB (VK1100)		1
S4-DAL-R	225-22811-201	.CONNECTOR-PCB (VK1100)		1
S5-DAL-R	225-22811-201	.CONNECTOR-PCB (VK1100)		1
S6-DAL-R	225-22811-201	.CONNECTOR-PCB (VK1100)		1
S7-DAL-R	225-22811-201	.CONNECTOR-PCB (VK1100)		1
S8-DAL-R	225-22811-201	.CONNECTOR-PCB (VK1100)		1
S9-DAL-R	225-22811-201	.CONNECTOR-PCB (VK1100)		1

MISSING ITEM NO. NOT APPLICABLE

– ITEM NOT ILLUSTRATED

IDENT	PART NUMBER	1234567 NOMENCLATURE	EFFECT FROM TO	UNITS PER ASSY
T-CD	HWBUN1736D6B	.TERMINAL BLOCK- (VK0574)		1
TB-DAJ	HWBUN1146D10B	.TERMINAL BLOCK- (VK0574)		1
V-CD	99-630	.INDICATOR- (V32245)		1
Y	HWBUN1736D10B	.TERMINAL BLOCK- (VK0574)		1
Z-DAE	25-8NF205-503A	.HEATSINK ASSY- (COMPRISING: TRANSISTORS MJE2955 (VK5519) TERMINAL BLOCK HWBUN1736S10B (VK0574))		1
		MISSING ITEM NO. NOT APPLICABLE		

– ITEM NOT ILLUSTRATED

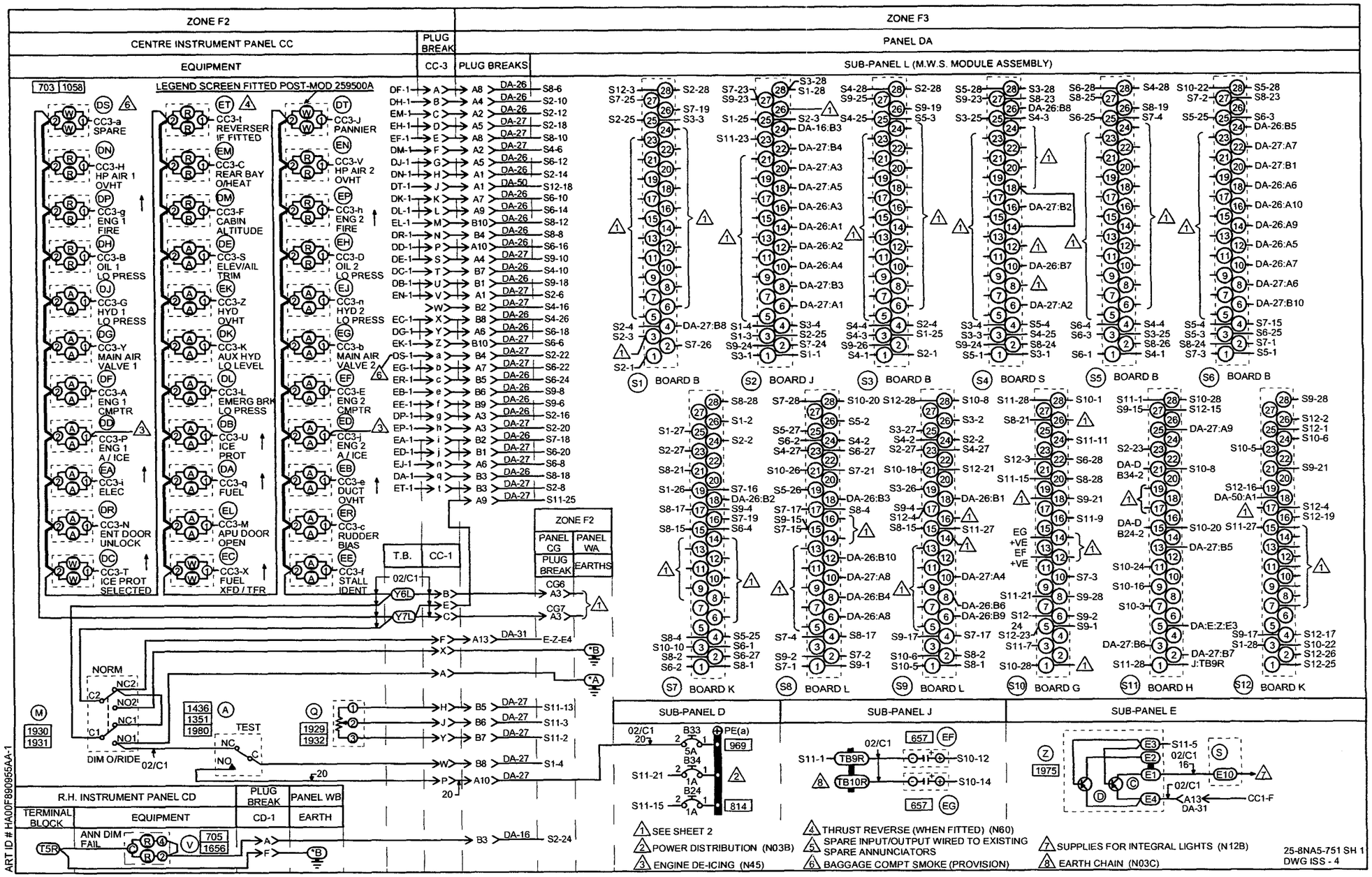
ZONE F2
ZONE F3
CENTRE INSTRUMENT PANEL CC
PLUG BREAK
PANEL DA
EQUIPMENT
CC-3
PLUG BREAKS
SUB-PANEL L (M.W.S. MODULE ASSEMBLY)
LEGEND SCREEN FITTED POST-MOD 259500A
CC3-a SPARE
CC3-t REVERSER IF FITTED
CC3-J PANNIER
CC3-H HP AIR 1 OVHT
CC3-C REAR BAY O/HEAT
CC3-V HP AIR 2 OVHT
CC3-g ENG 1 FIRE
CC3-F CABIN ALTITUDE
CC3-h ENG 2 FIRE
CC3-B OIL 1 LO PRESS
CC3-S ELEV/AIL TRIM
CC3-D OIL 2 LO PRESS
CC3-G HYD 1 LO PRESS
CC3-Z HYD OVHT
CC3-n HYD 2 LO PRESS
CC3-Y MAIN AIR VALVE 1
CC3-K AUX HYD LO LEVEL
CC3-b MAIN AIR VALVE 2
CC3-A ENG 1 CMPTR
CC3-L EMERG BRK LO PRESS
CC3-E ENG 2 CMPTR
CC3-P ENG 1 A/ICE
CC3-U ICE PROT
CC3-j ENG 2 A/ICE
CC3-i ELEC
CC3-q FUEL
CC3-e DUCT OVHT
CC3-N ENT DOOR UNLOCK
CC3-M APU DOOR OPEN
CC3-c RUDDER BIAS
CC3-T ICE PROT SELECTED
CC3-X FUEL XFD/TFR
CC3-f STALL IDENT
T.B.
CC-1
ZONE F2
PANEL CG
PANEL WA
PLUG BREAK
EARTHS
NORM
TEST
DIM O/RIDE
R.H. INSTRUMENT PANEL CD
PLUG BREAK
PANEL WB
TERMINAL BLOCK
EQUIPMENT
CD-1
EARTH
ANN DIM FAIL
BOARD B
BOARD J
BOARD B
BOARD S
BOARD B
BOARD B
BOARD K
BOARD L
BOARD L
BOARD G
BOARD H
BOARD K
SUB-PANEL D
SUB-PANEL J
SUB-PANEL E
SEE SHEET 2
POWER DISTRIBUTION (N03B)
ENGINE DE-ICING (N45)
THRUST REVERSE (WHEN FITTED) (N60)
SPARE INPUT/OUTPUT WIRED TO EXISTING SPARE ANNUNCIATORS
BAGGAGE COMPT SMOKE (PROVISION)
SUPPLIES FOR INTEGRAL LIGHTS (N12B)
EARTH CHAIN (N03C)
25-8NA5-751 SH 1
DWG ISS - 4
ART ID # HA00F890955AA-1

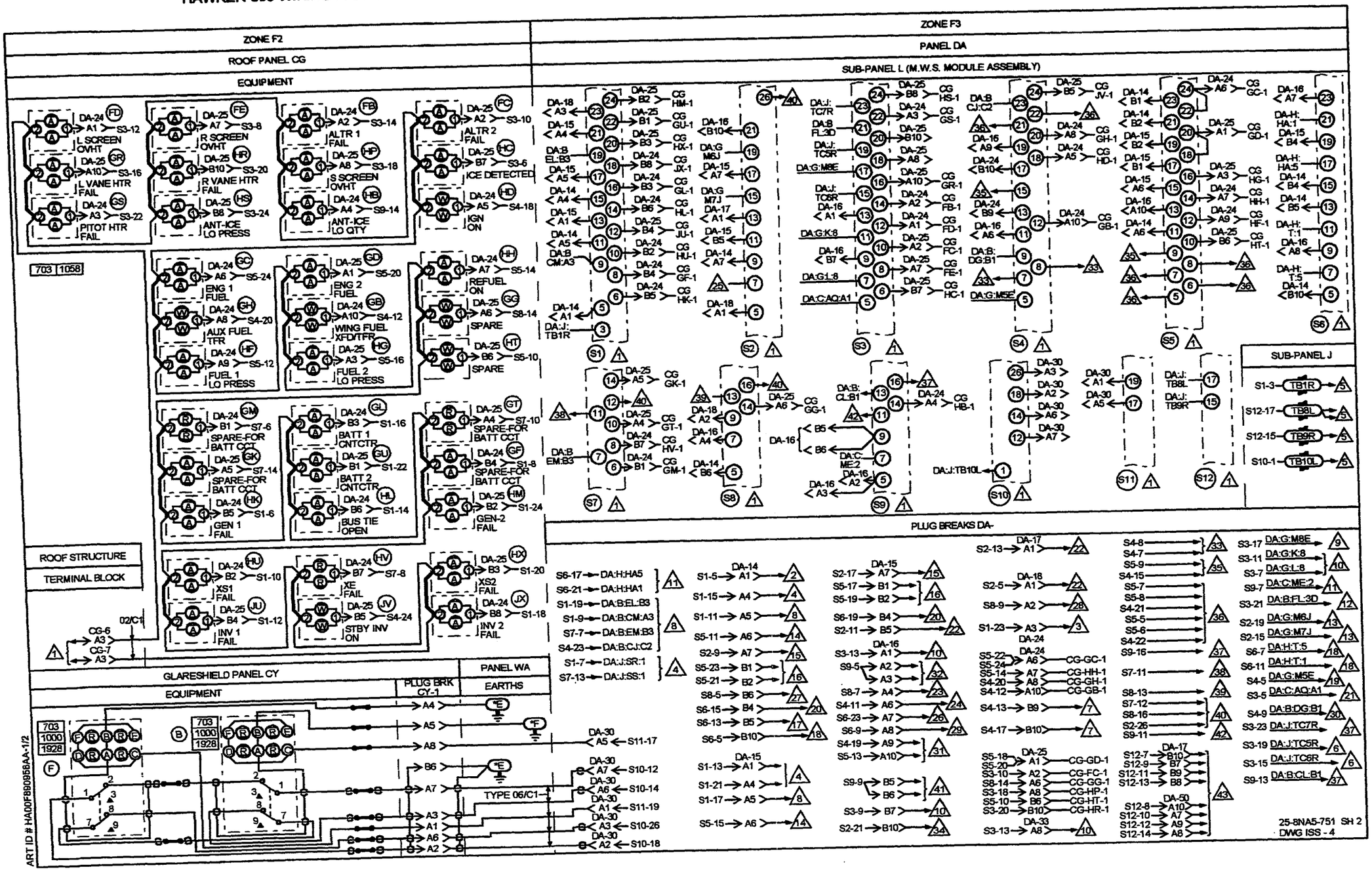
ZONE F2
ROOF PANEL CG
EQUIPMENT
ZONE F3
PANEL DA
SUB-PANEL L (M.W.S. MODULE ASSEMBLY)
L SCREEN OVHT
L VANE HTR FAIL
PITOT HTR FAIL
R SCREEN OVHT
R VANE HTR FAIL
ANT-ICE LO PRESS
ALTR 1 FAIL
S SCREEN OVHT
ANT-ICE LO QTY
ALTR 2 FAIL
ICE DETECTED
IGN ON
ENG 1 FUEL
AUX FUEL TFR
FUEL 1 LO PRESS
ENG 2 FUEL
WING FUEL XFD/TFR
FUEL 2 LO PRESS
REFUEL ON
SPARE
SPARE-FOR BATT CCT
GEN 1 FAIL
BATT 1 CNTCTR
BATT 2 CNTCTR
BUS TIE OPEN
GEN-2 FAIL
XS1 FAIL
INV 1 FAIL
XE FAIL
STBY INV ON
XS2 FAIL
INV 2 FAIL
SUB-PANEL J
PLUG BREAKS DA-
ROOF STRUCTURE
TERMINAL BLOCK
GLARESHIELD PANEL CY
EQUIPMENT
PLUG BRK CY-1
PANEL WA
EARTHS
TYPE 06/C1
25-8NA5-751 SH 2
DWG ISS - 4
ART ID # HA00F9B0956AA-1/2

SUB-PANEL L M.V.S. MODULE DETAILS							
R/CHART SOCKET REF	INPUT CCT BOARD REF	R/CHART SOCKET REF	INPUT CCT BOARD REF	R/CHART SOCKET REF	INPUT CCT BOARD REF	R/CHART SOCKET REF	INPUT CCT BOARD REF
S1	B	S7	K	S10	G	S11	H
S2	J	S8	L				
S3	B	S9	L				
S4	S	S12	K				
S5	B						
S6	B						

PIN	DESIGNATION	DESIGNATION	DESIGNATION	DESIGNATION
1	RED TRIGGER	TRIGGER CIRCUITS	EARTH 2	EARTH 1
2	AMBER/WHITE TRIGGER		———	DIM LO
3	EARTH		AMBER LATCH	DIM CT
4	28V TEST SUPPLY	EARTH	———	———
5	I/P 1	I/P 1	AMBER TRIGGER	DIM CONTROL
6	O/P	O/P		———
7	I/P 2	I/P 2	———	AMBER LATCH
8	O/P	O/P	28V SUPPLY 2	———
9	I/P 3	I/P 3	———	RED LATCH 2
10	O/P	O/P	RED TRIGGER	———
11	I/P 4	I/P 4	———	RED LATCH 1
12	O/P	O/P	CANCEL 2	———
13	I/P 5	I/P 5	———	DIM HI
14	O/P	O/P	CANCEL 1	———
15	I/P 6	+28V TEST	———	SUPPLY 1
16	O/P	REPEATER O/P	RED LATCH 2	———
17	I/P 7	EARTH 2	———	FLASHER 1
18	O/P	REPEATER OUT	CANCEL 3	———
19	I/P 8	REPEATER IN	———	FLASHER 2
20	O/P	———	28V SUPPLY 2	———
21	I/P 9	CANCEL 3	———	SUPPLY 2
22	O/P	———	RED TRIGGER	———
23	I/P 10	AMBER TRIGGER OUT	———	ANN DIM FAIL
24	O/P		RED LATCH 1	———
25	EARTH	AMBER TRIGGER IN	———	DIM SENSE
26	REPEATER O/P		CANCEL 4	———
27	AMBER/WHITE TRIGGER	———	———	TEST
28	RED TRIGGER	28V SUPPLY 2	EARTH 1	EARTH 2

NOTE : FOR CIRCUIT DIAGRAM OF M.W.S. INPUT & CONTROL BOARDS SEE DRGS REF:

25-6NF693-3A	BOARD B
25-6NF1909	BOARD G
25-6NF693-41A	BOARD J
25-7NF785-53A	BOARD L
25-8NF761-1A	BOARD H
25-7NF785-51A	BOARD K
25-8NF355-1A	BOARD Y
25-8NF355-17A	BOARD S

1. SEE SHEET 1
2. D.C. POWER SYSTEM (N01A)
3. D.C. POWER SYSTEM (N01B)
4. D.C. POWER DISTRIBUTION (N03A)
5. EARTH CHAIN (N03C)
6. STALL VANE HEAT (N25C)
7. ENGINE START & IGNITION (N04)
8. SECONDARY POWER SUPPLY (N05)
9. "B" WINDOW DE-ICE (N20B)
10. WINDSCREEN DE-ICE (N20)
11. CABIN AIR TEMP CONTROL (N24)
12. PITOT HEATER (N25)
13. FIRE DETECTION (N27)
14. FUEL PRESSURE (N29)
15. OIL PRESSURE & TEMP (N30)
16. FUEL FILTER DE-ICE (N32)
17. BRAKE PRESSURE (N39)
18. HYDRAULIC SYSTEMS INDRS (N42)
19. CABIN DEPRESSN (N44)
20. ENGINE DE-ICING (N45)
21. ICE DETECTION (N47)
22. REAR BAY O/HEAT (N54)
23. ENTRY DOOR WARNING (N57)
24. TFR FUEL COCK WARNING (N58)
25. THRUST REVERSERS (IF FITTED) (N60)
26. RUDDER BIAS (N62)
27. FUEL COMPUTER NO.1 (N63A)
28. FUEL COMPUTER NO.2 (N63B)
29. EMERGENCY HYDRAULIC LO LEVEL (N79)
30. ENGINE IDLE SPEED CONTRL (N63C)
31. LONG RANGE FUEL SYSTEM (N90A&B)
32. STALL IDENT SYSTEM (N55)
33. PASSENGER OXYGEN PROVISION
34. BAGGAGE CPT SMOKE PROVISION
35. SPARE I/O WIRED TO SPARE ANNUNCIATORS
36. SPARE I/O NOT WIRED TO ANNUNCIATORS
37. TKS SYSTEM (N46)
38. SPARE-ELECT (AMBER)
39. SPARE-FUEL (AMBER)
40. SPARE-SYSTEM CAPT OUT
41. CONTROL SURFACES OUT OF TRIM (N83)
42. SPARE (RED)
43. BAGGAGE PANNIER (N77)

25-8NA5-751 SH 3
DWG ISS -1

ART ID # HA00F990957AA

IDENT	PART NUMBER	1234567 NOMENCLATURE	EFFECT FROM TO	UNITS PER ASSY
		MASTER WARNING SYSTEM	113113 124124 144144	
	25-8NA5-751	WIRING DIAGRAM- (MOD 259499A)		RF
A-CC	6A43	.SWITCH- (V91929) (OPT (VK6596)) (USED WITH BASE: 2D70)		1
B-CY	25-8NF615-3A	.ANNUNCIATOR		1
B-S1-DAL	25-6NF693-3A	.PRINTED CIRCUIT BOARD- TYPE B		1
B-S3-DAL	25-6NF693-3A	.PRINTED CIRCUIT BOARD- TYPE B		1
B-S5-DAL	25-6NF693-3A	.PRINTED CIRCUIT BOARD- TYPE B		1
B-S6-DAL	25-6NF693-3A	.PRINTED CIRCUIT BOARD- TYPE B		1
B24-DAD	483TCG11J25-1A	.CIRCUIT BREAKER-1A (VU0091)		1
B33-DAD	483TCG11J25-5A	.CIRCUIT BREAKER-5A (VU0091)		1
B34-DAD	483TCG11J25-1A	.CIRCUIT BREAKER-1A (VU0091)		1
C-Z-DAE	MJE2955	.TRANSISTOR- (VK5519) (USED ON HEATSINK: 25-8NF205-503A)		1
CC1-P	BAEREF000003123	.CONNECTOR-SOCKET (6027-20-41SNCONDB) (VK1793)		1
CC1-R	6026-20-41PN	.CONNECTOR-PIN (VK4161) (OPT 6026-20-41PNCONDB) (VK1793)		1
CC3-P	BAEREF000003123	.CONNECTOR-SOCKET (6027-20-41SNCONDB) (VK1793)		1
CC3-R	6026-20-41PN	.CONNECTOR-PIN (VK4161) (OPT 6026-20-41PNC8) (V71468) (OPT (VK0316)) (OPT 6026-20-41PNCONDB) (VK1793)		1
CD1-P	BAEREF000003145	.CONNECTOR-SOCKET (6027-14-19SNCONDB) (VK1793)		1
		MISSING ITEM NO. NOT APPLICABLE		

– ITEM NOT ILLUSTRATED

IDENT	PART NUMBER	1234567 NOMENCLATURE	EFFECT FROM TO	UNITS PER ASSY
CD1-R	BAEREF000003143	.CONNECTOR-PIN (6026-14-19PNCONDB) (VK1793)		1
CG6-P	MTC100YH2-009	.SHELL-PLUG (VK1010) (USED WITH WAFERS: TYPE A, MTC100KT2-1101 TYPE B, MTC100KT2-1102)		1
CG6-R	MTC100YH2-010	.SHELL-RECEPTACLE (VK1010) (USED WITH WAFERS: TYPE A, MTC100KT2-1103 TYPE B, MTC100KT2-1104)		1
CG7-P	MTC100YH2-009	.SHELL-PLUG (VK1010) (USED WITH WAFERS: TYPE A, MTC100KT2-1101 TYPE B, MTC100KT2-1102)		1
CG7-R	MTC100YH2-010	.SHELL-RECEPTACLE (VK1010) (USED WITH WAFERS: TYPE A, MTC100KT2-1103 TYPE B, MTC100KT2-1104)		1
CY1-P	MTC100YH2-009	.SHELL-PLUG (VK1010) (USED WITH WAFERS: TYPE A, MTC100KT2-1103 TYPE B, MTC100KT2-1104)		1
CY1-R	MTC100YH2-010	.SHELL-RECEPTACLE (VK1010) (USED WITH WAFERS: TYPE A, MTC100KT2-1101 TYPE B, MTC100KT2-1102)		1
D-Z-DAE	MJE2955	.TRANSISTOR- (VK5519) (USED ON HEATSINK: 25-8NF205-503A)		1
DA-CC	C9032-001B	.LAMP MODULE- (VK0673)		1
DA14-P	MTC100YH1-003	.SHELL-PLUG (VK1010) (USED WITH WAFERS: TYPE A, MTC100KT1-1101 TYPE B, MTC100KT1-1102)		1
DA14-R	MTC100YH1-004	.SHELL-RECEPTACLE (VK1010) (USED WITH WAFERS: TYPE A, MTC100KT1-1103 TYPE B, MTC100KT1-1104)		1
		MISSING ITEM NO. NOT APPLICABLE		

– ITEM NOT ILLUSTRATED

IDENT	PART NUMBER	1234567 NOMENCLATURE	EFFECT FROM TO	UNITS PER ASSY
DA15-P	MTC100YH1-003	.SHELL-PLUG (VK1010) (USED WITH WAFERS: TYPE A, MTC100KT1-1101 TYPE B, MTC100KT1-1102)		1
DA15-R	MTC100YH1-004	.SHELL-RECEPTACLE (VK1010) (USED WITH WAFERS: TYPE A, MTC100KT1-1103 TYPE B, MTC100KT1-1104)		1
DA16-P	MTC100YH1-003	.SHELL-PLUG (VK1010) (USED WITH WAFERS: TYPE A, MTC100KT1-1101 TYPE B, MTC100KT1-1102)		1
DA16-R	MTC100YH1-004	.SHELL-RECEPTACLE (VK1010) (USED WITH WAFERS: TYPE A, MTC100KT1-1103 TYPE B, MTC100KT1-1104)		1
DA17-P	MTC100YH1-003	.SHELL-PLUG (VK1010) (USED WITH WAFERS: TYPE A, MTC100KT1-1101 DUMMY, MTCX1X100-100)		1
DA17-R	MTC100YH1-004	.SHELL-RECEPTACLE (VK1010) (USED WITH WAFERS: TYPE A, MTC100KT1-1103 DUMMY, MTCX1X100-100)		1
DA18-P	MTC100YH1-003	.SHELL-PLUG (VK1010) (USED WITH WAFERS: TYPE A, MTC100KT1-1101 DUMMY, MTCX1X100-100)		1
DA18-R	MTC100YH1-004	.SHELL-RECEPTACLE (VK1010) (USED WITH WAFERS: TYPE A, MTC100KT1-1103 DUMMY, MTCX1X100-100)		1
DA24-P	MTC100YH1-003	.SHELL-PLUG (VK1010) (USED WITH WAFERS: TYPE A, MTC100KT1-1101 TYPE B, MTC100KT1-1102)		1
DA24-R	MTC100YH1-004	.SHELL-RECEPTACLE (VK1010) (USED WITH WAFERS: TYPE A, MTC100KT1-1103 TYPE B, MTC100KT1-1104)		1
		MISSING ITEM NO. NOT APPLICABLE		

– ITEM NOT ILLUSTRATED

IDENT	PART NUMBER	1234567 NOMENCLATURE	EFFECT FROM TO	UNITS PER ASSY
DA25-P	MTC100YH1-003	.SHELL-PLUG (VK1010) (USED WITH WAFERS: TYPE A, MTC100KT1-1101 TYPE B, MTC100KT1-1102)		1
DA25-R	MTC100YH1-004	.SHELL-RECEPTACLE (VK1010) (USED WITH WAFERS: TYPE A, MTC100KT1-1103 TYPE B, MTC100KT1-1104)		1
DA26-P	MTC100YH1-003	.SHELL-PLUG (VK1010) (USED WITH WAFERS: TYPE A, MTC100KT1-1101 TYPE B, MTC100KT1-1102)		1
DA26-R	MTC100YH1-004	.SHELL-RECEPTACLE (VK1010) (USED WITH WAFERS: TYPE A, MTC100KT1-1103 TYPE B, MTC100KT1-1104)		1
DA27-P	MTC100YH1-003	.SHELL-PLUG (VK1010) (USED WITH WAFERS: TYPE A, MTC100KT1-1101 TYPE B, MTC100KT1-1102)		1
DA27-R	MTC100YH1-004	.SHELL-RECEPTACLE (VK1010) (USED WITH WAFERS: TYPE A, MTC100KT1-1103 TYPE B, MTC100KT1-1104)		1
DA30-P	MTC100YH1-003	.SHELL-PLUG (VK1010) (USED WITH WAFERS: TYPE A, MTC100KT1-1101 DUMMY, MTCX1X100-100)		1
DA30-R	MTC100YH1-004	.SHELL-RECEPTACLE (VK1010) (USED WITH WAFERS: TYPE A, MTC100KT1-1103 DUMMY, MTCX1X100-100)		1
DA31-P	MTC100YH2-009	.SHELL-PLUG (VK1010) (USED WITH WAFERS: TYPE A, MTC100KT2-1101 TYPE B, MTC100KT2-1102)		1
DA31-R	MTC100YH2-010	.SHELL-RECEPTACLE (VK1010) (USED WITH WAFERS: TYPE A, MTC100KT2-1103 TYPE B, MTC100KT2-1104)		1
		MISSING ITEM NO. NOT APPLICABLE		

– ITEM NOT ILLUSTRATED

IDENT	PART NUMBER	1234567 NOMENCLATURE	EFFECT FROM TO	UNITS PER ASSY
DA33-P	MTC100YH2-009	.SHELL-PLUG (VK1010) (USED WITH WAFERS: TYPE A, MTC100KT2-1101 TYPE B, MTC100KT2-1102)		1
DA33-R	MTC100YH2-010	.SHELL-RECEPTACLE (VK1010) (USED WITH WAFERS: TYPE A, MTC100KT2-1103 TYPE B, MTC100KT2-1104)		1
DA50-P	MTC100YH1-003	.SHELL-PLUG (VK1010) (USED WITH WAFERS: TYPE A, MTC100KT1-1101 DUMMY, MTCX1X100-100)		1
DA50-R	MTC100YH1-004	.SHELL-RECEPTACLE (VK1010) (USED WITH WAFERS: TYPE A, MTC100KT1-1103 DUMMY, MTCX1X100-100)		1
DB-CC	C9032-001B	.LAMP MODULE- (VK0673)		1
DC-CC	C9032-001B	.LAMP MODULE- (VK0673)		1
DD-CC	C9032-001B	.LAMP MODULE- (VK0673)		1
DE-CC	C9032-001B	.LAMP MODULE- (VK0673)		1
DF-CC	C9032-001B	.LAMP MODULE- (VK0673)		1
DG-CC	C9032-001B	.LAMP MODULE- (VK0673)		1
DH-CC	C9032-001B	.LAMP MODULE- (VK0673)		1
DJ-CC	C9032-001B	.LAMP MODULE- (VK0673)		1
DK-CC	C9032-001B	.LAMP MODULE- (VK0673)		1
DL-CC	C9032-001B	.LAMP MODULE- (VK0673)		1
DM-CC	C9032-001B	.LAMP MODULE- (VK0673)		1
DN-CC	C9032-001B	.LAMP MODULE- (VK0673)		1
DP-CC	C9032-001B	.LAMP MODULE- (VK0673)		1
DR-CC	C9032-001B	.LAMP MODULE- (VK0673)		1
DS-CC	C9032-001B	.LAMP MODULE- (VK0673)		1
		MISSING ITEM NO. NOT APPLICABLE		

– ITEM NOT ILLUSTRATED

IDENT	PART NUMBER	1234567 NOMENCLATURE	EFFECT FROM TO	UNITS PER ASSY
DT-CC	C9032-001B	.LAMP MODULE- (VK0673)		1
EA-CC	C9032-001B	.LAMP MODULE- (VK0673)		1
EB-CC	C9032-001B	.LAMP MODULE- (VK0673)		1
EC-CC	C9032-001B	.LAMP MODULE- (VK0673)		1
ED-CC	C9032-001B	.LAMP MODULE- (VK0673)		1
EE-CC	C9032-001B	.LAMP MODULE- (VK0673)		1
EF-CC	C9032-001B	.LAMP MODULE- (VK0673)		1
EF-DAJ	5910-99-0124911	.CAPACITOR- (VK1672)		1
EG-CC	C9032-001B	.LAMP MODULE- (VK0673)		1
EG-DAJ	5910-99-0124911	.CAPACITOR- (VK1672)		1
EH-CC	C9032-001B	.LAMP MODULE- (VK0673)		1
EJ-CC	C9032-001B	.LAMP MODULE- (VK0673)		1
EK-CC	C9032-001B	.LAMP MODULE- (VK0673)		1
EL-CC	C9032-001B	.LAMP MODULE- (VK0673)		1
EM-CC	C9032-001B	.LAMP MODULE- (VK0673)		1
EN-CC	C9032-001B	.LAMP MODULE- (VK0673)		1
EP-CC	C9032-001B	.LAMP MODULE- (VK0673)		1
ER-CC	C9032-001B	.LAMP MODULE- (VK0673)		1
ET-CC	C9032-001B	.LAMP MODULE- (VK0673)		1
F-CY	25-8NF615-1A	.ANNUNCIATOR		1
FB-CG	C9032-001B	.LAMP MODULE- (VK0673)		1
FC-CG	C9032-001B	.LAMP MODULE- (VK0673)		1
FD-CG	C9032-001B	.LAMP MODULE- (VK0673)		1
FE-CG	C9032-001B	.LAMP MODULE- (VK0673)		1
G-S10-DAL	25-6NF1909A	.PRINTED CIRCUIT BOARD- TYPE G		1
		MISSING ITEM NO. NOT APPLICABLE		

– ITEM NOT ILLUSTRATED

IDENT	PART NUMBER	1234567 NOMENCLATURE	EFFECT FROM TO	UNITS PER ASSY
GB-CG	C9032-001B	.LAMP MODULE- (VK0673)		1
GC-CG	C9032-001B	.LAMP MODULE- (VK0673)		1
GD-CG	C9032-001B	.LAMP MODULE- (VK0673)		1
GF-CG	C9032-001B	.LAMP MODULE- (VK0673)		1
GG-CG	C9032-001B	.LAMP MODULE- (VK0673)		1
GH-CG	C9032-001B	.LAMP MODULE- (VK0673)		1
GK-CG	C9032-001B	.LAMP MODULE- (VK0673)		1
GL-CG	C9032-001B	.LAMP MODULE- (VK0673)		1
GM-CG	C9032-001B	.LAMP MODULE- (VK0673)		1
GR-CG	C9032-001B	.LAMP MODULE- (VK0673)		1
GS-CG	C9032-001B	.LAMP MODULE- (VK0673)		1
GT-CG	C9032-001B	.LAMP MODULE- (VK0673)		1
GU-CG	C9032-001B	.LAMP MODULE- (VK0673)		1
H-S11-DAL	25-8NF761-41A	.PRINTED CIRCUIT BOARD- TYPE H		1
HB-CG	C9032-001B	.LAMP MODULE- (VK0673)		1
HC-CG	C9032-001B	.LAMP MODULE- (VK0673)		1
HD-CG	C9032-001B	.LAMP MODULE- (VK0673)		1
HF-CG	C9032-001B	.LAMP MODULE- (VK0673)		1
HG-CG	C9032-001B	.LAMP MODULE- (VK0673)		1
HH-CG	C9032-001B	.LAMP MODULE- (VK0673)		1
HK-CG	C9032-001B	.LAMP MODULE- (VK0673)		1
HL-CG	C9032-001B	.LAMP MODULE- (VK0673)		1
HM-CG	C9032-001B	.LAMP MODULE- (VK0673)		1
HP-CG	C9032-001B	.LAMP MODULE- (VK0673)		1
HR-CG	C9032-001B	.LAMP MODULE- (VK0673)		1
		MISSING ITEM NO. NOT APPLICABLE		

– ITEM NOT ILLUSTRATED

IDENT	PART NUMBER	1234567 NOMENCLATURE	EFFECT FROM TO	UNITS PER ASSY
HS-CG	C9032-001B	.LAMP MODULE- (VK0673)		1
HT-CG	C9032-001B	.LAMP MODULE- (VK0673)		1
HU-CG	C9032-001B	.LAMP MODULE- (VK0673)		1
HV-CG	C9032-001B	.LAMP MODULE- (VK0673)		1
HX-CG	C9032-001B	.LAMP MODULE- (VK0673)		1
J-S2-DAL	25-6NF693-41A	.PRINTED CIRCUIT BOARD- TYPE J (UNIT EXCHANGE ITEM)		1
JU-CG	C9032-001B	.LAMP MODULE- (VK0673)		1
JV-CG	C9032-001B	.LAMP MODULE- (VK0673)		1
JX-CG	C9032-001B	.LAMP MODULE- (VK0673)		1
K-S12-DAL	25-7NF785-51A	.PRINTED CIRCUIT BOARD- TYPE K		1
K-S7-DAL	25-7NF785-51A	.PRINTED CIRCUIT BOARD- TYPE K		1
L-S8-DAL	25-7NF785-53A	.PRINTED CIRCUIT BOARD- TYPE L		1
L-S9-DAL	25-7NF785-53A	.PRINTED CIRCUIT BOARD- TYPE L		1
M-CC	6AT4	.SWITCH- (V91929) (OPT (VK6596))		1
Q-CC	140-4537	.POTENTIOMETER- (VK1021)		1
S-DAE	25-8NF405-503A	.HEAT SINK ASSY- (COMPRISING: TERMINAL BLOCK HWBUN1736S10B (VK0574))		1
S-S4-DAL	25-8NF355-17A	.PRINTED CIRCUIT BOARD- TYPE S		1
S1-DAL-R	225-22811-201	.CONNECTOR-PCB (VK1100)		1
S10-DAL-R	225-22811-201	.CONNECTOR-PCB (VK1100)		1
S11-DAL-R	225-22811-201	.CONNECTOR-PCB (VK1100)		1
S12-DAL-R	225-22811-201	.CONNECTOR-PCB (VK1100)		1
S2-DAL-R	225-22811-201	.CONNECTOR-PCB (VK1100)		1
		MISSING ITEM NO. NOT APPLICABLE		

– ITEM NOT ILLUSTRATED

IDENT	PART NUMBER	1234567 NOMENCLATURE	EFFECT FROM TO	UNITS PER ASSY
S3-DAL-R	225-22811-201	.CONNECTOR-PCB (VK1100)		1
S4-DAL-R	225-22811-201	.CONNECTOR-PCB (VK1100)		1
S5-DAL-R	225-22811-201	.CONNECTOR-PCB (VK1100)		1
S6-DAL-R	225-22811-201	.CONNECTOR-PCB (VK1100)		1
S7-DAL-R	225-22811-201	.CONNECTOR-PCB (VK1100)		1
S8-DAL-R	225-22811-201	.CONNECTOR-PCB (VK1100)		1
S9-DAL-R	225-22811-201	.CONNECTOR-PCB (VK1100)		1
T-CD	HWBUN1736D6B	.TERMINAL BLOCK- (VK0574)		1
TB-DAJ	HWBUN1146D10B	.TERMINAL BLOCK- (VK0574)		1
V-CD	99-630	.INDICATOR- (V32245)		1
Y	HWBUN1736D10B	.TERMINAL BLOCK- (VK0574)		1
Z-DAE	25-8NF205-503A	.HEATSINK ASSY- (COMPRISING: TRANSISTORS MJE2955 (VK5519) TERMINAL BLOCK HWBUN1736S10B (VK0574))		1
		MISSING ITEM NO. NOT APPLICABLE		

– ITEM NOT ILLUSTRATED

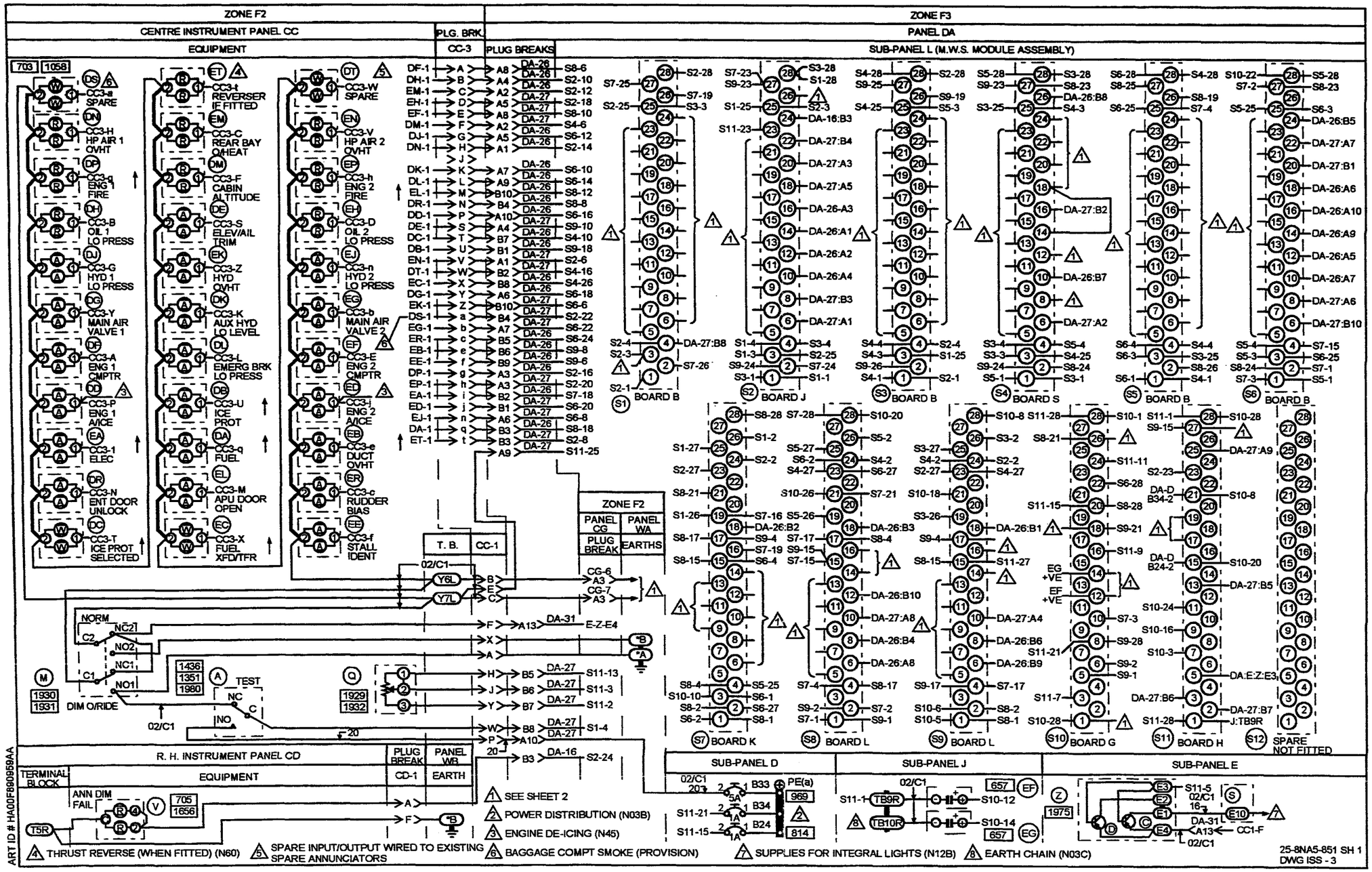
ZONE F2
CENTRE INSTRUMENT PANEL CC
EQUIPMENT
PLG. BRK
CC-3
PLUG BREAKS
ZONE F3
PANEL DA
SUB-PANEL L (M.W.S. MODULE ASSEMBLY)
CC3-H HP AIR 1 OVHT
CC3-q ENG 1 FIRE
CC3-B OIL 1 LO PRESS
CC3-G HYD 1 LO PRESS
CC3-Y MAIN AIR VALVE 1
CC3-A ENG 1 CMPTR
CC3-P ENG 1 A/ICE
CC3-1 ELEC
CC3-N ENT DOOR UNLOCK
CC3-T ICE PROT SELECTED
CC3-t REVERSER IF FITTED
CC3-C REAR BAY O/HEAT
CC3-F CABIN ALTITUDE
CC3-S ELEV/AIL TRIM
CC3-Z HYD OVHT
CC3-K AUX HYD LO LEVEL
CC3-L EMERG BRK LO PRESS
CC3-U ICE PROT
CC3-q FUEL
CC3-M APU DOOR OPEN
CC3-X FUEL XFD/TFR
CC3-W SPARE
CC3-V HP AIR 2 OVHT
CC3-h ENG 2 FIRE
CC3-D OIL 2 LO PRESS
CC3-n HYD 2 LO PRESS
CC3-b MAIN AIR VALVE 2
CC3-E ENG 2 CMPTR
CC3-I ENG 2 A/ICE
CC3-e DUCT OVHT
CC3-c RUDDER BIAS
CC3-f STALL IDENT
ZONE F2
PANEL CG
PANEL WA
PLUG BREAK
EARTHS
T. B.
CC-1
NORM
TEST
DIM O/RIDE
BOARD B
BOARD J
BOARD B
BOARD S
BOARD B
BOARD B
BOARD K
BOARD L
BOARD L
BOARD G
BOARD H
SPARE NOT FITTED
R. H. INSTRUMENT PANEL CD
EQUIPMENT
PLUG BREAK
PANEL WB
CD-1
EARTH
TERMINAL BLOCK
ANN DIM FAIL
SUB-PANEL D
SUB-PANEL J
SUB-PANEL E
SEE SHEET 2
POWER DISTRIBUTION (N03B)
ENGINE DE-ICING (N45)
BAGGAGE COMPT SMOKE (PROVISION)
SUPPLIES FOR INTEGRAL LIGHTS (N12B)
EARTH CHAIN (N03C)
THRUST REVERSE (WHEN FITTED) (N60)
SPARE INPUT/OUTPUT WIRED TO EXISTING SPARE ANNUNCIATORS
ART ID # HA00F890959AA
25-8NA5-851 SH 1
DWG ISS - 3

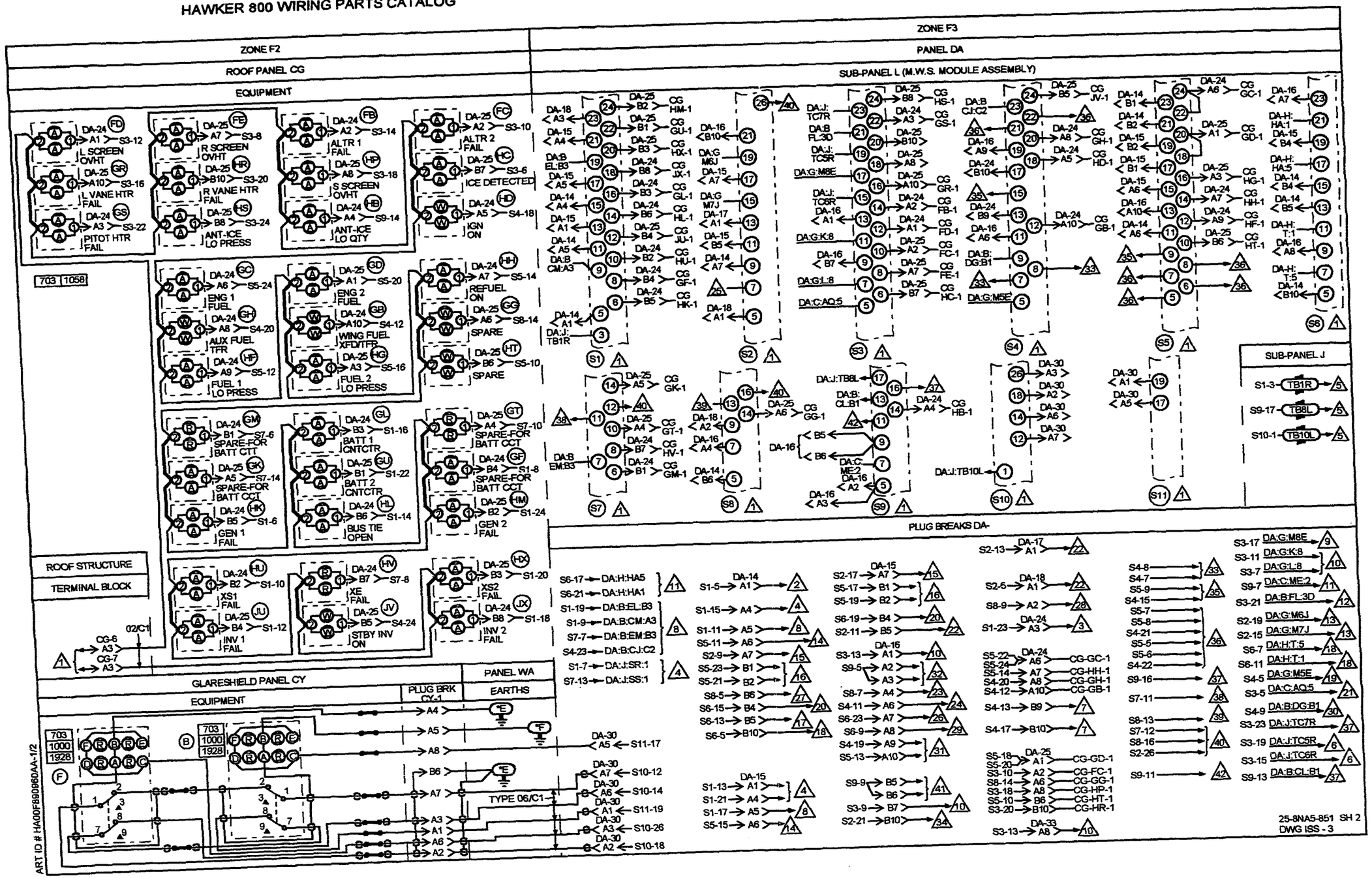
ZONE F2
ROOF PANEL CG
EQUIPMENT
ZONE F3
PANEL DA
SUB-PANEL L (M.W.S. MODULE ASSEMBLY)
L SCREEN OVHT
L VANE HTR FAIL
PITOT HTR FAIL
R SCREEN OVHT
R VANE HTR FAIL
ANT-ICE LO PRESS
ALTR 1 FAIL
S SCREEN OVHT
ANT-ICE LO QTY
ALTR 2 FAIL
ICE DETECTED
IGN ON
ENG 1 FUEL
AUX FUEL TFR
FUEL 1 LO PRESS
ENG 2 FUEL
WING FUEL XFD/TFR
FUEL 2 LO PRESS
REFUEL ON
SPARE
SPARE-FOR BATT CCT
GEN 1 FAIL
BATT 1 CNTCTR
BATT 2 CNTCTR
BUS TIE OPEN
GEN 2 FAIL
XS1 FAIL
INV 1 FAIL
XE FAIL
STBY INV ON
XS2 FAIL
INV 2 FAIL
ROOF STRUCTURE
TERMINAL BLOCK
GLARESHIELD PANEL CY
EQUIPMENT
PLUG BRK CY-1
PANEL WA
EARTHS
TYPE 06/C1
PLUG BREAKS DA-
SUB-PANEL J
25-8NA5-851 SH 2
DWG ISS - 3
ART ID # HA00F89086DAA-1/2

SUB-PANEL L M.V.S. MODULE DETAILS

R/CHART SOCKET REF	INPUT CCT BOARD REF	R/CHART SOCKET REF	INPUT CCT BOARD REF	R/CHART SOCKET REF	INPUT CCT BOARD REF	R/CHART SOCKET REF	INPUT CCT BOARD REF
S1	B	S7	K	S10	G	S11	H
S2	J	S8	L				
S3	B	S9	L				
S4	S						
S5	B						
S6	B						

PIN	DESIGNATION	DESIGNATION	DESIGNATION	DESIGNATION
1	RED TRIGGER	TRIGGER CIRCUITS	EARTH 2	EARTH 1
2	AMBER/WHITE TRIGGER		——-	DIM LO
3	EARTH		AMBER LATCH	DIM CT
4	28V TEST SUPPLY	EARTH	——-	——-
5	I/P 1	I/P 1	AMBER TRIGGER	DIM CONTROL
6	O/P 1	O/P 1		——-
7	I/P 2	I/P 2	——-	AMBER LATCH
8	O/P 2	O/P 2	28V SUPPLY 2	——-
9	I/P 3	I/P 3	——-	RED LATCH 2
10	O/P 3	O/P 3	RED TRIGGER	——-
11	I/P 4	I/P 4	——-	RED LATCH 1
12	O/P 4	O/P 4	CANCEL 2	——-
13	I/P 5	I/P 5	——-	DIM HI
14	O/P 5	O/P 5	CANCEL 1	——-
15	I/P 6	+28V TEST	——-	SUPPLY 1
16	O/P 6	REPEATER O/P	RED LATCH 2	——-
17	I/P 7	EARTH 2	——-	FLASHER 1
18	O/P 7	REPEATER OUT	CANCEL 3	——-
19	I/P 8	REPEATER IN	——-	FLASHER 2
20	O/P 8	——-	28V SUPPLY 2	——-
21	I/P 9	CANCEL 3	——-	SUPPLY 2
22	O/P 9	——-	RED TRIGGER	——-
23	I/P 10	AMBER TRIGGER OUT	——-	ANN DIM FAIL
24	O/P 10		RED LATCH 1	——-
25	EARTH	AMBER TRIGGER IN	——-	DIM SENSE
26	REPEATER O/P		CANCEL 4	——-
27	AMBER/WHITE TRIGGER	——-	——-	TEST
28	RED TRIGGER	28V SUPPLY 2	EARTH 1	EARTH 2

NOTE : FOR CIRCUIT DIAGRAM OF M.W.S. INPUT & CONTROL BOARDS SEE DRGS REF:-

25-6NF693-3A	BOARD B
25-6NF1909	BOARD G
25-6NF693-41A	BOARD J
25-7NF785-53A	BOARD L
25-8NF761-1A	BOARD H
25-7NF785-51A	BOARD K
25-8NF355-1A	BOARD Y
25-8NF355-17A	BOARD S

1. SEE SHEET 1
2. D.C. POWER SYSTEM (N01A)
3. D.C. POWER SYSTEM (N01B)
4. D.C. POWER DISTRIBUTION (N03A)
5. EARTH CHAIN (N03C)
6. STALL VANE HEAT (N25C)
7. ENGINE START & IGNITION (N04)
8. SECONDARY POWER SUPPLY (N05)
9. "B" WINDOW DE-ICE (N20B)
10. WINDSCREEN DE-ICE (N20)
11. CABIN AIR TEMP CONTROL (N24)
12. PITOT HEATER (N25)
13. FIRE DETECTION (N27)
14. FUEL PRESSURE (N29)
15. OIL PRESSURE & TEMP (N30)
16. FUEL FILTER DE-ICE (N32)
17. BRAKE PRESSURE (N39)
18. HYDRAULIC SYSTEMS INDRS (N42)
19. CABIN DEPRESSN (N44)
20. ENGINE DE-ICING (N45)
21. ICE DETECTION (N47)
22. REAR BAY O/HEAT (N54)
23. ENTRY DOOR WARNING (N57)
24. TFR FUEL COCK WARNING (N58)
25. THRUST REVERSERS IF FITTED (N60)
26. RUDDER BIAS (N62)
27. FUEL COMPUTER No.1 (N63A)
28. FUEL COMPUTER No.2 (N63B)
29. EMERGENCY HYDRAULIC LO LEVEL (N79)
30. ENG IDLE SPEED CONTROL (N63C)
31. LONG RANGE FUEL SYST (N90A&B)
32. STALL IDENT SYSTEM (N55)
33. PASSENGER OXYGEN PROVISION
34. BAGGAGE CPT SMOKE PROVISION
35. SPARE I/O WIRED TO SPARE ANNUNCIATORS
36. SPARE I/O NOT WIRED TO ANNUNCIATORS
37. TKS SYSTEM (N46)
38. SPARE-ELECT (AMBER)
39. SPARE FUEL (AMBER)
40. SPARE-SYSTEM CAPT OUT
41. CONTROL SURFACES OUT OF TRIM (N93)
42. SPARE (RED)

25-8NA5-851 SH 3
DWG ISS -1

ART ID # HA00F980961AA

IDENT	PART NUMBER	1234567 NOMENCLATURE	EFFECT FROM TO	UNITS PER ASSY
		MASTER WARNING SYSTEM	152179 181181 183185 187196 198209 212218 220221 223223 225225 229232 234234 236236 238257 259276	
	25-8NA5-851	WIRING DIAGRAM- (MOD 253214A)		RF
A-CC	6A43	.SWITCH- (V91929) (OPT (VK6596)) (USED WITH BASE: 2D70)		1
B-CY	25-8NF615-3A	.ANNUNCIATOR		1
B-S1-DAL	25-6NF693-3A	.PRINTED CIRCUIT BOARD- TYPE B		1
B-S3-DAL	25-6NF693-3A	.PRINTED CIRCUIT BOARD- TYPE B		1
B-S5-DAL	25-6NF693-3A	.PRINTED CIRCUIT BOARD- TYPE B		1
B-S6-DAL	25-6NF693-3A	.PRINTED CIRCUIT BOARD- TYPE B		1
B24-DAD	483TCG11J25-1A	.CIRCUIT BREAKER-1A (VU0091)		1
B33-DAD	483TCG11J25-5A	.CIRCUIT BREAKER-5A (VU0091)		1
B34-DAD	483TCG11J25-1A	.CIRCUIT BREAKER-1A (VU0091)		1
C-Z-DAE	MJE2955	.TRANSISTOR- (VK5519) (USED ON HEATSINK: 25-8NF205-503A)		1
CC1-P	BAEREF000003123	.CONNECTOR-SOCKET (6027-20-41SNCONDB) (VK1793)		1
CC1-R	6026-20-41PN	.CONNECTOR-PIN (VK4161) (OPT 6026-20-41PNCONDB) (VK1793)		1
CC3-P	BAEREF000003123	.CONNECTOR-SOCKET (6027-20-41SNCONDB) (VK1793)		1
		MISSING ITEM NO. NOT APPLICABLE		

– ITEM NOT ILLUSTRATED

IDENT	PART NUMBER	1234567 NOMENCLATURE	EFFECT FROM TO	UNITS PER ASSY
CC3-R	6026-20-41PN	.CONNECTOR-PIN (VK4161) (OPT 6026-20-41PNC8) (V71468) (OPT (VK0316)) (OPT 6026-20-41PNCONDB) (VK1793)		1
CD1-P	BAEREF000003145	.CONNECTOR-SOCKET (6027-14-19SNCONDB) (VK1793)		1
CD1-R	BAEREF000003143	.CONNECTOR-PIN (6026-14-19PNCONDB) (VK1793)		1
CG6-P	MTC100YH2-009	.SHELL-PLUG (VK1010) (USED WITH WAFERS: TYPE A, MTC100KT2-1101 TYPE B, MTC100KT2-1102)	152179 181181 183185 187196 198209 212218 220221 223223 225225 229232 234234 236236 238254	1
CG6-P	MTC100YH2-009	.SHELL-PLUG (VK1010) (USED WITH INSERTS: PRIMARY MTC100YC1-001 SECONDARY MTC100YC1-002) (MOD 253252A)	255257 259276	1
CG6-R	MTC100YH2-010	.SHELL-RECEPTACLE (VK1010) (USED WITH WAFERS: TYPE A, MTC100KT2-1103 TYPE B, MTC100KT2-1104)	152179 181181 183185 187196 198209 212218 220221 223223 225225 229232 234234 236236 238254	1

MISSING ITEM NO. NOT APPLICABLE

– ITEM NOT ILLUSTRATED

IDENT	PART NUMBER	1234567 NOMENCLATURE	EFFECT FROM TO	UNITS PER ASSY
CG6-R	MTC100YH2-010	.SHELL-RECEPTACLE (VK1010) (USED WITH INSERTS: PRIMARY MTC100YC1-003 SECONDARY MTC100YC1-004) (MOD 253252A)	255257 259276	1
CG7-P	MTC100YH2-009	.SHELL-PLUG (VK1010) (USED WITH WAFERS: TYPE A, MTC100KT2-1101 TYPE B, MTC100KT2-1102)	152179 181181 183185 187196 198209 212218 220221 223223 225225 229232 234234 236236 238254	1
CG7-P	MTC100YH2-009	.SHELL-PLUG (VK1010) (USED WITH INSERTS: PRIMARY MTC100YC1-001 SECONDARY MTC100YC1-002) (MOD 253252A)	255257 259276	1
CG7-R	MTC100YH2-010	.SHELL-RECEPTACLE (VK1010) (USED WITH WAFERS: TYPE A, MTC100KT2-1103 TYPE B, MTC100KT2-1104)	152179 181181 183185 187196 198209 212218 220221 223223 225225 229232 234234 236236 238254	1
CG7-R	MTC100YH2-010	.SHELL-RECEPTACLE (VK1010) (USED WITH INSERTS: PRIMARY MTC100YC1-003 SECONDARY MTC100YC1-004) (MOD 253252A)	255257 259276	1
		MISSING ITEM NO. NOT APPLICABLE		

– ITEM NOT ILLUSTRATED

IDENT	PART NUMBER	1234567 NOMENCLATURE	EFFECT FROM TO	UNITS PER ASSY
CY1-P	MTC100YH2-009	.SHELL-PLUG (VK1010) (USED WITH WAFERS: TYPE A, MTC100KT2-1103 TYPE B, MTC100KT2-1104)	152179 181181 183185 187196 198209 212218 220221 223223 225225 229232 234234 236236 238254	1
CY1-P	MTC100YH2-009	.SHELL-PLUG (VK1010) (USED WITH INSERTS: PRIMARY MTC100YC1-003 SECONDARY MTC100YC1-004) (MOD 253252A)	255257 259276	1
CY1-R	MTC100YH2-010	.SHELL-RECEPTACLE (VK1010) (USED WITH WAFERS: TYPE A, MTC100KT2-1101 TYPE B, MTC100KT2-1102)	152179 181181 183185 187196 198209 212218 220221 223223 225225 229232 234234 236236 238254	1
CY1-R	MTC100YH2-010	.SHELL-RECEPTACLE (VK1010) (USED WITH INSERTS: PRIMARY MTC100YC1-001 SECONDARY MTC100YC1-002) (MOD 253252A)	255257 259276	1
D-Z-DAE	MJE2955	.TRANSISTOR- (VK5519) (USED ON HEATSINK: 25-8NF205-503A)		1
DA-CC	C9032-001B	.LAMP MODULE- (VK0673)		1
		MISSING ITEM NO. NOT APPLICABLE		

– ITEM NOT ILLUSTRATED

IDENT	PART NUMBER	1234567 NOMENCLATURE	EFFECT FROM TO	UNITS PER ASSY
DA14-P	MTC100YH1-003	.SHELL-PLUG (VK1010) (USED WITH WAFERS: TYPE A, MTC100KT1-1101 TYPE B, MTC100KT1-1102)	152179 181181 183185 187196 198209 212218 220221 223223 225225 229232 234234 236236 238254	1
DA14-P	MTC100YH1-003	.SHELL-PLUG (VK1010) (USED WITH INSERT: MTC100YC1-005) (MOD 253252A)	255257 259276	1
DA14-R	MTC100YH1-004	.SHELL-RECEPTACLE (VK1010) (USED WITH WAFERS: TYPE A, MTC100KT1-1103 TYPE B, MTC100KT1-1104)	152179 181181 183185 187196 198209 212218 220221 223223 225225 229232 234234 236236 238254	1
DA14-R	MTC100YH1-004	.SHELL-RECEPTACLE (VK1010) (USED WITH INSERT: MTC100YC1-006) (MOD 253252A)	255257 259276	1
DA15-P	MTC100YH1-003	.SHELL-PLUG (VK1010) (USED WITH WAFERS: TYPE A, MTC100KT1-1101 TYPE B, MTC100KT1-1102)	152179 181181 183185 187196 198209 212218 220221 223223 225225 229232 234234 236236 238254	1
		MISSING ITEM NO. NOT APPLICABLE		

– ITEM NOT ILLUSTRATED

IDENT	PART NUMBER	1234567 NOMENCLATURE	EFFECT FROM TO	UNITS PER ASSY
DA15-P	MTC100YH1-003	.SHELL-PLUG (VK1010) (USED WITH INSERT: MTC100YC1-005) (MOD 253252A)	255257 259276	1
DA15-R	MTC100YH1-004	.SHELL-RECEPTACLE (VK1010) (USED WITH WAFERS: TYPE A, MTC100KT1-1103 TYPE B, MTC100KT1-1104)	152179 181181 183185 187196 198209 212218 220221 223223 225225 229232 234234 236236 238254	1
DA15-R	MTC100YH1-004	.SHELL-RECEPTACLE (VK1010) (USED WITH INSERT: MTC100YC1-006) (MOD 253252A)	255257 259276	1
DA16-P	MTC100YH1-003	.SHELL-PLUG (VK1010) (USED WITH WAFERS: TYPE A, MTC100KT1-1101 TYPE B, MTC100KT1-1102)	152179 181181 183185 187196 198209 212218 220221 223223 225225 229232 234234 236236 238254	1
DA16-P	MTC100YH1-003	.SHELL-PLUG (VK1010) (USED WITH INSERT: MTC100YC1-005) (MOD 253252A)	255257 259276	1
		MISSING ITEM NO. NOT APPLICABLE		

– ITEM NOT ILLUSTRATED

IDENT	PART NUMBER	1234567 NOMENCLATURE	EFFECT FROM TO	UNITS PER ASSY
DA16-R	MTC100YH1-004	.SHELL-RECEPTACLE (VK1010) (USED WITH WAFERS: TYPE A, MTC100KT1-1103 TYPE B, MTC100KT1-1104)	152179 181181 183185 187196 198209 212218 220221 223223 225225 229232 234234 236236 238254	1
DA16-R	MTC100YH1-004	.SHELL-RECEPTACLE (VK1010) (USED WITH INSERT: MTC100YC1-006) (MOD 253252A)	255257 259276	1
DA17-P	MTC100YH1-003	.SHELL-PLUG (VK1010) (USED WITH WAFERS: TYPE A, MTC100KT1-1101 DUMMY, MTCX1X100-100)	152179 181181 183185 187196 198209 212218 220221 223223 225225 229232 234234 236236 238254	1
DA17-P	MTC100YH1-003	.SHELL-PLUG (VK1010) (USED WITH INSERT: MTC100YC1-005) (MOD 253252A)	255257 259276	1
DA17-R	MTC100YH1-004	.SHELL-RECEPTACLE (VK1010) (USED WITH WAFERS: TYPE A, MTC100KT1-1103 DUMMY, MTCX1X100-100)	152179 181181 183185 187196 198209 212218 220221 223223 225225 229232 234234 236236 238254	1
		MISSING ITEM NO. NOT APPLICABLE		

– ITEM NOT ILLUSTRATED

IDENT	PART NUMBER	1234567 NOMENCLATURE	EFFECT FROM TO	UNITS PER ASSY
DA17-R	MTC100YH1-004	.SHELL-RECEPTACLE (VK1010) (USED WITH INSERT: MTC100YC1-006) (MOD 253252A)	255257 259276	1
DA18-P	MTC100YH1-003	.SHELL-PLUG (VK1010) (USED WITH WAFERS: TYPE A, MTC100KT1-1101 DUMMY, MTCX1X100-100)	152179 181181 183185 187196 198209 212218 220221 223223 225225 229232 234234 236236 238254	1
DA18-P	MTC100YH1-003	.SHELL-PLUG (VK1010) (USED WITH INSERT: MTC100YC1-005) (MOD 253252A)	255257 259276	1
DA18-R	MTC100YH1-004	.SHELL-RECEPTACLE (VK1010) (USED WITH WAFERS: TYPE A, MTC100KT1-1103 DUMMY, MTCX1X100-100)	152179 181181 183185 187196 198209 212218 220221 223223 225225 229232 234234 236236 238254	1
DA18-R	MTC100YH1-004	.SHELL-RECEPTACLE (VK1010) (USED WITH INSERT: MTC100YC1-006) (MOD 253252A)	255257 259276	1
		MISSING ITEM NO. NOT APPLICABLE		

– ITEM NOT ILLUSTRATED

IDENT	PART NUMBER	1234567 NOMENCLATURE	EFFECT FROM TO	UNITS PER ASSY
DA24-P	MTC100YH1-003	.SHELL-PLUG (VK1010) (USED WITH WAFERS: TYPE A, MTC100KT1-1101 TYPE B, MTC100KT1-1102)	152179 181181 183185 187196 198209 212218 220221 223223 225225 229232 234234 236236 238254	1
DA24-P	MTC100YH1-003	.SHELL-PLUG (VK1010) (USED WITH INSERT: MTC100YC1-005) (MOD 253252A)	255257 259276	1
DA24-R	MTC100YH1-004	.SHELL-RECEPTACLE (VK1010) (USED WITH WAFERS: TYPE A, MTC100KT1-1103 TYPE B, MTC100KT1-1104)	152179 181181 183185 187196 198209 212218 220221 223223 225225 229232 234234 236236 238254	1
DA24-R	MTC100YH1-004	.SHELL-RECEPTACLE (VK1010) (USED WITH INSERT: MTC100YC1-006) (MOD 253252A)	255257 259276	1
DA25-P	MTC100YH1-003	.SHELL-PLUG (VK1010) (USED WITH WAFERS: TYPE A, MTC100KT1-1101 TYPE B, MTC100KT1-1102)	152179 181181 183185 187196 198209 212218 220221 223223 225225 229232 234234 236236 238254	1
		MISSING ITEM NO. NOT APPLICABLE		

– ITEM NOT ILLUSTRATED

IDENT	PART NUMBER	1234567 NOMENCLATURE	EFFECT FROM TO	UNITS PER ASSY
DA25-P	MTC100YH1-003	.SHELL-PLUG (VK1010) (USED WITH INSERT: MTC100YC1-005) (MOD 253252A)	255257 259276	1
DA25-R	MTC100YH1-004	.SHELL-RECEPTACLE (VK1010) (USED WITH WAFERS: TYPE A, MTC100KT1-1103 TYPE B, MTC100KT1-1104)	152179 181181 183185 187196 198209 212218 220221 223223 225225 229232 234234 236236 238254	1
DA25-R	MTC100YH1-004	.SHELL-RECEPTACLE (VK1010) (USED WITH INSERT: MTC100YC1-006) (MOD 253252A)	255257 259276	1
DA26-P	MTC100YH1-003	.SHELL-PLUG (VK1010) (USED WITH WAFERS: TYPE A, MTC100KT1-1101 TYPE B, MTC100KT1-1102)	152179 181181 183185 187196 198209 212218 220221 223223 225225 229232 234234 236236 238254	1
DA26-P	MTC100YH1-003	.SHELL-PLUG (VK1010) (USED WITH INSERT: MTC100YC1-005) (MOD 253252A)	255257 259276	1

MISSING ITEM NO. NOT APPLICABLE

– ITEM NOT ILLUSTRATED

IDENT	PART NUMBER	1234567 NOMENCLATURE	EFFECT FROM TO	UNITS PER ASSY
DA26-R	MTC100YH1-004	.SHELL-RECEPTACLE (VK1010) (USED WITH WAFERS: TYPE A, MTC100KT1-1103 TYPE B, MTC100KT1-1104)	152179 181181 183185 187196 198209 212218 220221 223223 225225 229232 234234 236236 238254	1
DA26-R	MTC100YH1-004	.SHELL-RECEPTACLE (VK1010) (USED WITH INSERT: MTC100YC1-006) (MOD 253252A)	255257 259276	1
DA27-P	MTC100YH1-003	.SHELL-PLUG (VK1010) (USED WITH WAFERS: TYPE A, MTC100KT1-1101 TYPE B, MTC100KT1-1102)	152179 181181 183185 187196 198209 212218 220221 223223 225225 229232 234234 236236 238254	1
DA27-P	MTC100YH1-003	.SHELL-PLUG (VK1010) (USED WITH INSERT: MTC100YC1-005) (MOD 253252A)	255257 259276	1
DA27-R	MTC100YH1-004	.SHELL-RECEPTACLE (VK1010) (USED WITH WAFERS: TYPE A, MTC100KT1-1103 TYPE B, MTC100KT1-1104)	152179 181181 183185 187196 198209 212218 220221 223223 225225 229232 234234 236236 238254	1
		MISSING ITEM NO. NOT APPLICABLE		

– ITEM NOT ILLUSTRATED

IDENT	PART NUMBER	1234567 NOMENCLATURE	EFFECT FROM TO	UNITS PER ASSY
DA27-R	MTC100YH1-004	.SHELL-RECEPTACLE (VK1010) (USED WITH INSERT: MTC100YC1-006) (MOD 253252A)	255257 259276	1
DA30-P	MTC100YH1-003	.SHELL-PLUG (VK1010) (USED WITH WAFERS: TYPE A, MTC100KT1-1101 DUMMY, MTCX1X100-100)	152179 181181 183185 187196 198209 212218 220221 223223 225225 229232 234234 236236 238254	1
DA30-P	MTC100YH1-003	.SHELL-PLUG (VK1010) (USED WITH INSERT: MTC100YC1-005) (MOD 253252A)	255257 259276	1
DA30-R	MTC100YH1-004	.SHELL-RECEPTACLE (VK1010) (USED WITH WAFERS: TYPE A, MTC100KT1-1103 DUMMY, MTCX1X100-100)	152179 181181 183185 187196 198209 212218 220221 223223 225225 229232 234234 236236 238254	1
DA30-R	MTC100YH1-004	.SHELL-RECEPTACLE (VK1010) (USED WITH INSERT: MTC100YC1-006) (MOD 253252A)	255257 259276	1
		MISSING ITEM NO. NOT APPLICABLE		

– ITEM NOT ILLUSTRATED

IDENT	PART NUMBER	1234567 NOMENCLATURE	EFFECT FROM TO	UNITS PER ASSY
DA31-P	MTC100YH2-009	.SHELL-PLUG (VK1010) (USED WITH WAFERS: TYPE A, MTC100KT2-1101 TYPE B, MTC100KT2-1102)	152179 181181 183185 187196 198209 212218 220221 223223 225225 229232 234234 236236 238254	1
DA31-P	MTC100YH2-009	.SHELL-PLUG (VK1010) (USED WITH INSERTS: PRIMARY MTC100YC1-001 SECONDARY MTC100YC1-002) (MOD 253252A)	255257 259276	1
DA31-R	MTC100YH2-010	.SHELL-RECEPTACLE (VK1010) (USED WITH WAFERS: TYPE A, MTC100KT2-1103 TYPE B, MTC100KT2-1104)	152179 181181 183185 187196 198209 212218 220221 223223 225225 229232 234234 236236 238254	1
DA31-R	MTC100YH2-010	.SHELL-RECEPTACLE (VK1010) (USED WITH INSERTS: PRIMARY MTC100YC1-003 SECONDARY MTC100YC1-004) (MOD 253252A)	255257 259276	1
		MISSING ITEM NO. NOT APPLICABLE		

– ITEM NOT ILLUSTRATED

IDENT	PART NUMBER	1234567 NOMENCLATURE	EFFECT FROM TO	UNITS PER ASSY
DA33-P	MTC100YH2-009	.SHELL-PLUG (VK1010) (USED WITH WAFERS: TYPE A, MTC100KT2-1101 TYPE B, MTC100KT2-1102)	152179 181181 183185 187196 198209 212218 220221 223223 225225 229232 234234 236236 238254	1
DA33-P	MTC100YH2-009	.SHELL-PLUG (VK1010) (USED WITH INSERTS: PRIMARY MTC100YC1-001 SECONDARY MTC100YC1-002) (MOD 253252A)	255257 259276	1
DA33-R	MTC100YH2-010	.SHELL-RECEPTACLE (VK1010) (USED WITH WAFERS: TYPE A, MTC100KT2-1103 TYPE B, MTC100KT2-1104)	152179 181181 183185 187196 198209 212218 220221 223223 225225 229232 234234 236236 238254	1
DA33-R	MTC100YH2-010	.SHELL-RECEPTACLE (VK1010) (USED WITH INSERTS: PRIMARY MTC100YC1-003 SECONDARY MTC100YC1-004) (MOD 253252A)	255257 259276	1
DB-CC	C9032-001B	.LAMP MODULE- (VK0673)		1
DC-CC	C9032-001B	.LAMP MODULE- (VK0673)		1
DD-CC	C9032-001B	.LAMP MODULE- (VK0673)		1
DE-CC	C9032-001B	.LAMP MODULE- (VK0673)		1
DF-CC	C9032-001B	.LAMP MODULE- (VK0673)		1
DG-CC	C9032-001B	.LAMP MODULE- (VK0673)		1
		MISSING ITEM NO. NOT APPLICABLE		

– ITEM NOT ILLUSTRATED

IDENT	PART NUMBER	1234567 NOMENCLATURE	EFFECT FROM TO	UNITS PER ASSY
DH-CC	C9032-001B	.LAMP MODULE- (VK0673)		1
DJ-CC	C9032-001B	.LAMP MODULE- (VK0673)		1
DK-CC	C9032-001B	.LAMP MODULE- (VK0673)		1
DL-CC	C9032-001B	.LAMP MODULE- (VK0673)		1
DM-CC	C9032-001B	.LAMP MODULE- (VK0673)		1
DN-CC	C9032-001B	.LAMP MODULE- (VK0673)		1
DP-CC	C9032-001B	.LAMP MODULE- (VK0673)		1
DR-CC	C9032-001B	.LAMP MODULE- (VK0673)		1
DS-CC	C9032-001B	.LAMP MODULE- (VK0673)		1
DT-CC	C9032-001B	.LAMP MODULE- (VK0673)		1
EA-CC	C9032-001B	.LAMP MODULE- (VK0673)		1
EB-CC	C9032-001B	.LAMP MODULE- (VK0673)		1
EC-CC	C9032-001B	.LAMP MODULE- (VK0673)		1
ED-CC	C9032-001B	.LAMP MODULE- (VK0673)		1
EE-CC	C9032-001B	.LAMP MODULE- (VK0673)		1
EF-CC	C9032-001B	.LAMP MODULE- (VK0673)		1
EF-DAJ	5910-99-0124911	.CAPACITOR- (VK1672)		1
EG-CC	C9032-001B	.LAMP MODULE- (VK0673)		1
EG-DAJ	5910-99-0124911	.CAPACITOR- (VK1672)		1
EH-CC	C9032-001B	.LAMP MODULE- (VK0673)		1
EJ-CC	C9032-001B	.LAMP MODULE- (VK0673)		1
EK-CC	C9032-001B	.LAMP MODULE- (VK0673)		1
EL-CC	C9032-001B	.LAMP MODULE- (VK0673)		1
EM-CC	C9032-001B	.LAMP MODULE- (VK0673)		1
EN-CC	C9032-001B	.LAMP MODULE- (VK0673)		1
		MISSING ITEM NO. NOT APPLICABLE		

– ITEM NOT ILLUSTRATED

IDENT	PART NUMBER	1234567 NOMENCLATURE	EFFECT FROM TO	UNITS PER ASSY
EP-CC	C9032-001B	.LAMP MODULE- (VK0673)		1
ER-CC	C9032-001B	.LAMP MODULE- (VK0673)		1
ET-CC	C9032-001B	.LAMP MODULE- (VK0673)		1
F-CY	25-8NF615-1A	.ANNUNCIATOR		1
FB-CG	C9032-001B	.LAMP MODULE- (VK0673)		1
FC-CG	C9032-001B	.LAMP MODULE- (VK0673)		1
FD-CG	C9032-001B	.LAMP MODULE- (VK0673)		1
FE-CG	C9032-001B	.LAMP MODULE- (VK0673)		1
G-S10-DAL	25-6NF1909A	.PRINTED CIRCUIT BOARD- TYPE G		1
GB-CG	C9032-001B	.LAMP MODULE- (VK0673)		1
GC-CG	C9032-001B	.LAMP MODULE- (VK0673)		1
GD-CG	C9032-001B	.LAMP MODULE- (VK0673)		1
GF-CG	C9032-001B	.LAMP MODULE- (VK0673)		1
GG-CG	C9032-001B	.LAMP MODULE- (VK0673)		1
GH-CG	C9032-001B	.LAMP MODULE- (VK0673)		1
GK-CG	C9032-001B	.LAMP MODULE- (VK0673)		1
GL-CG	C9032-001B	.LAMP MODULE- (VK0673)		1
GM-CG	C9032-001B	.LAMP MODULE- (VK0673)		1
GR-CG	C9032-001B	.LAMP MODULE- (VK0673)		1
GS-CG	C9032-001B	.LAMP MODULE- (VK0673)		1
GT-CG	C9032-001B	.LAMP MODULE- (VK0673)		1
GU-CG	C9032-001B	.LAMP MODULE- (VK0673)		1
H-S11-DAL	25-8NF761-41A	.PRINTED CIRCUIT BOARD- TYPE H		1
HB-CG	C9032-001B	.LAMP MODULE- (VK0673)		1
HC-CG	C9032-001B	.LAMP MODULE- (VK0673)		1
		MISSING ITEM NO. NOT APPLICABLE		

– ITEM NOT ILLUSTRATED

IDENT	PART NUMBER	1234567 NOMENCLATURE	EFFECT FROM TO	UNITS PER ASSY
HD-CG	C9032-001B	.LAMP MODULE- (VK0673)		1
HF-CG	C9032-001B	.LAMP MODULE- (VK0673)		1
HG-CG	C9032-001B	.LAMP MODULE- (VK0673)		1
HH-CG	C9032-001B	.LAMP MODULE- (VK0673)		1
HK-CG	C9032-001B	.LAMP MODULE- (VK0673)		1
HL-CG	C9032-001B	.LAMP MODULE- (VK0673)		1
HM-CG	C9032-001B	.LAMP MODULE- (VK0673)		1
HP-CG	C9032-001B	.LAMP MODULE- (VK0673)		1
HR-CG	C9032-001B	.LAMP MODULE- (VK0673)		1
HS-CG	C9032-001B	.LAMP MODULE- (VK0673)		1
HT-CG	C9032-001B	.LAMP MODULE- (VK0673)		1
HU-CG	C9032-001B	.LAMP MODULE- (VK0673)		1
HV-CG	C9032-001B	.LAMP MODULE- (VK0673)		1
HX-CG	C9032-001B	.LAMP MODULE- (VK0673)		1
J-S2-DAL	25-6NF693-41A	.PRINTED CIRCUIT BOARD- TYPE J (UNIT EXCHANGE ITEM)		1
JU-CG	C9032-001B	.LAMP MODULE- (VK0673)		1
JV-CG	C9032-001B	.LAMP MODULE- (VK0673)		1
JX-CG	C9032-001B	.LAMP MODULE- (VK0673)		1
K-S7-DAL	25-7NF785-51A	.PRINTED CIRCUIT BOARD- TYPE K		1
L-S8-DAL	25-7NF785-53A	.PRINTED CIRCUIT BOARD- TYPE L		1
L-S9-DAL	25-7NF785-53A	.PRINTED CIRCUIT BOARD- TYPE L		1
M-CC	6AT4	.SWITCH- (V91929) (OPT (VK6596))		1
Q-CC	140-4537	.POTENTIOMETER- (VK1021)		1
		MISSING ITEM NO. NOT APPLICABLE		

– ITEM NOT ILLUSTRATED

IDENT	PART NUMBER	1234567 NOMENCLATURE	EFFECT FROM TO	UNITS PER ASSY
S-DAE	25-8NF405-503A	.HEAT SINK ASSY- (COMPRISING: TERMINAL BLOCK HWBUN1736S10B (VK0574))		1
S-S4-DAL	25-8NF355-17A	.PRINTED CIRCUIT BOARD- TYPE S		1
S1-DAL-R	225-22811-201	.CONNECTOR-PCB (VK1100)		1
S10-DAL-R	225-22811-201	.CONNECTOR-PCB (VK1100)		1
S11-DAL-R	225-22811-201	.CONNECTOR-PCB (VK1100)		1
S2-DAL-R	225-22811-201	.CONNECTOR-PCB (VK1100)		1
S3-DAL-R	225-22811-201	.CONNECTOR-PCB (VK1100)		1
S4-DAL-R	225-22811-201	.CONNECTOR-PCB (VK1100)		1
S5-DAL-R	225-22811-201	.CONNECTOR-PCB (VK1100)		1
S6-DAL-R	225-22811-201	.CONNECTOR-PCB (VK1100)		1
S7-DAL-R	225-22811-201	.CONNECTOR-PCB (VK1100)		1
S8-DAL-R	225-22811-201	.CONNECTOR-PCB (VK1100)		1
S9-DAL-R	225-22811-201	.CONNECTOR-PCB (VK1100)		1
T-CD	HWBUN1736D6B	.TERMINAL BLOCK- (VK0574)		1
TB-DAJ	HWBUN1146D10B	.TERMINAL BLOCK- (VK0574)		1
V-CD	99-630	.INDICATOR- (V32245)		1
Y	HWBUN1736D10B	.TERMINAL BLOCK- (VK0574)		1
Z-DAE	25-8NF205-503A	.HEATSINK ASSY- (COMPRISING: TRANSISTORS MJE2955 (VK5519) TERMINAL BLOCK HWBUN1736S10B (VK0574))		1
		MISSING ITEM NO. NOT APPLICABLE		

– ITEM NOT ILLUSTRATED

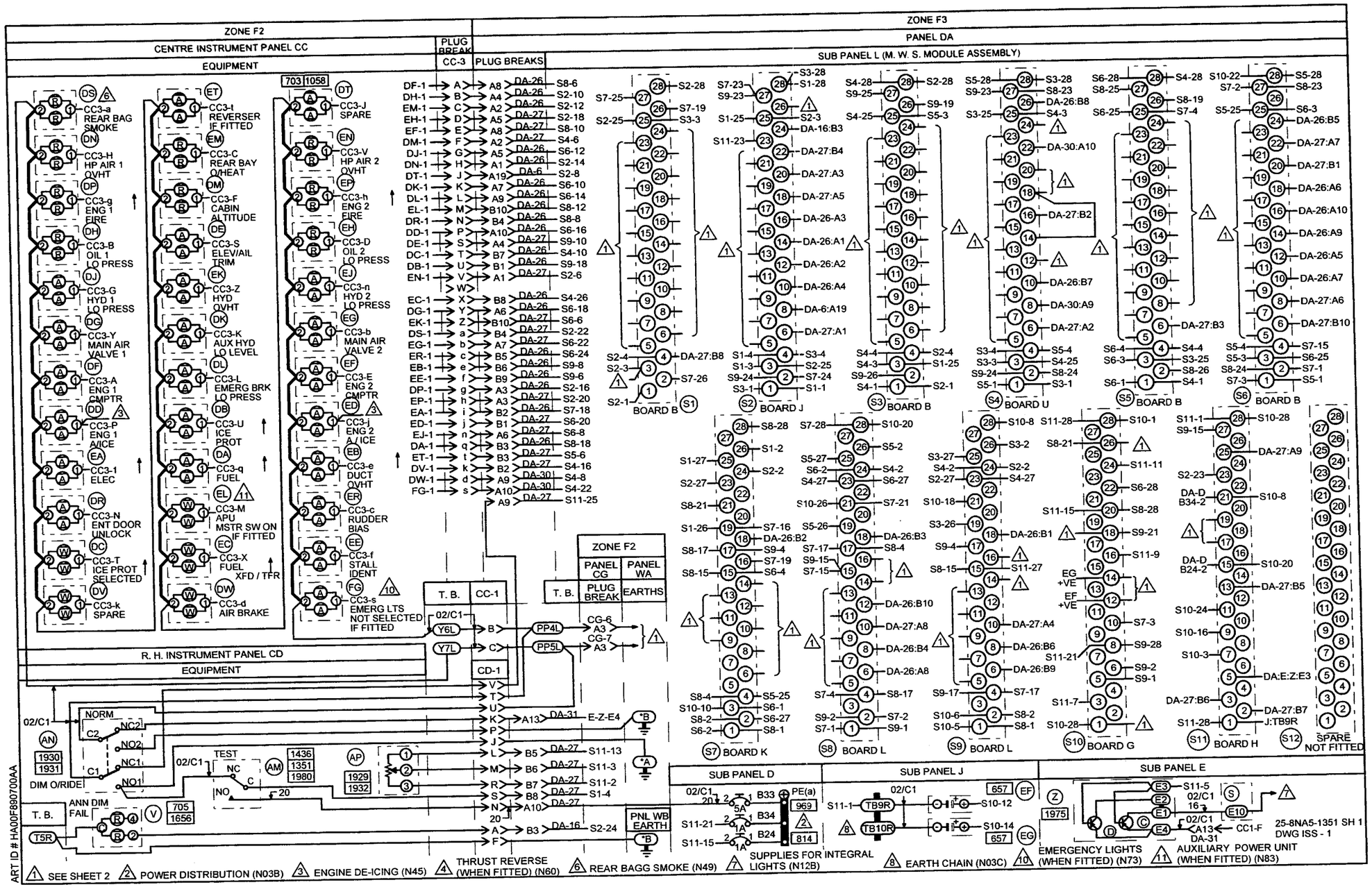
ZONE F2
CENTRE INSTRUMENT PANEL CC
EQUIPMENT
PLUG BREAK CC-3
PLUG BREAKS
ZONE F3
PANEL DA
SUB PANEL L (M. W. S. MODULE ASSEMBLY)
CC3-a REAR BAG SMOKE
CC3-H HP AIR 1 OVHT
CC3-g ENG 1 FIRE
CC3-B OIL 1 LO PRESS
CC3-G HYD 1 LO PRESS
CC3-Y MAIN AIR VALVE 1
CC3-A ENG 1 CMPTR
CC3-P ENG 1 A/ICE
CC3-1 ELEC
CC3-N ENT DOOR UNLOCK
CC3-T ICE PROT SELECTED
CC3-k SPARE
CC3-t REVERSER IF FITTED
CC3-C REAR BAY O/HEAT
CC3-F CABIN ALTITUDE
CC3-S ELEV/AIL TRIM
CC3-Z HYD OVHT
CC3-K AUX HYD LO LEVEL
CC3-L EMERG BRK LO PRESS
CC3-U ICE PROT
CC3-q FUEL
CC3-M APU MSTR SW ON IF FITTED
CC3-X FUEL XFD / TFR
CC3-d AIR BRAKE
CC3-J SPARE
CC3-V HP AIR 2 OVHT
CC3-h ENG 2 FIRE
CC3-D OIL 2 LO PRESS
CC3-n HYD 2 LO PRESS
CC3-b MAIN AIR VALVE 2
CC3-E ENG 2 CMPTR
CC3-j ENG 2 A/ICE
CC3-e DUCT OVHT
CC3-c RUDDER BIAS
CC3-f STALL IDENT
CC3-s EMERG LTS NOT SELECTED IF FITTED
703 1058
T. B.
CC-1
CD-1
ZONE F2
PANEL CG
PANEL WA
PLUG BREAK
EARTHS
R. H. INSTRUMENT PANEL CD
EQUIPMENT
NORM
TEST
DIM O/RIDE
ANN DIM FAIL
PNL WB EARTH
BOARD B
BOARD J
BOARD U
BOARD K
BOARD L
BOARD G
BOARD H
SPARE NOT FITTED
SUB PANEL D
SUB PANEL J
SUB PANEL E
SUPPLIES FOR INTEGRAL LIGHTS (N12B)
EMERGENCY LIGHTS (WHEN FITTED) (N73)
AUXILIARY POWER UNIT (WHEN FITTED) (N83)
25-8NA5-1351 SH 1
DWG ISS - 1
ART ID # HA00F890700AA
SEE SHEET 2
POWER DISTRIBUTION (N03B)
ENGINE DE-ICING (N45)
THRUST REVERSE (WHEN FITTED) (N60)
REAR BAGG SMOKE (N49)
EARTH CHAIN (N03C)

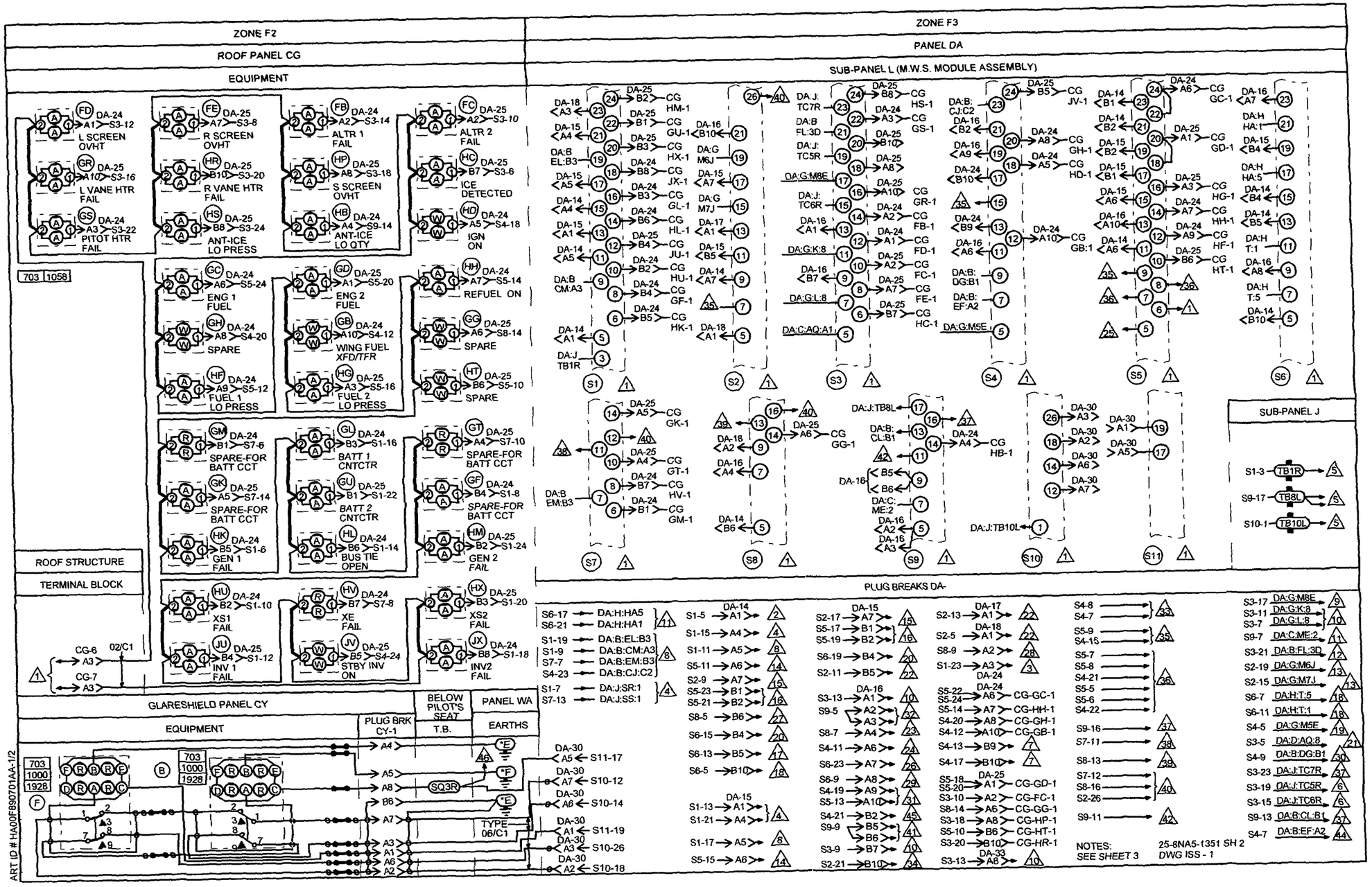
ZONE F2
ROOF PANEL CG
EQUIPMENT
ZONE F3
PANEL DA
SUB-PANEL L (M.W.S. MODULE ASSEMBLY)
L SCREEN OVHT
R SCREEN OVHT
ALTR 1 FAIL
ALTR 2 FAIL
L VANE HTR FAIL
R VANE HTR FAIL
S SCREEN OVHT
ICE DETECTED
PITOT HTR FAIL
ANT-ICE LO PRESS
ANT-ICE LO QTY
IGN ON
ENG 1 FUEL
ENG 2 FUEL
REFUEL ON
SPARE
WING FUEL XFD/TFR
FUEL 1 LO PRESS
FUEL 2 LO PRESS
SPARE-FOR BATT CCT
BATT 1 CNTCTR
BATT 2 CNTCTR
GEN 1 FAIL
BUS TIE OPEN
GEN 2 FAIL
XS1 FAIL
XE FAIL
XS2 FAIL
INV 1 FAIL
STBY INV ON
INV2 FAIL
ROOF STRUCTURE
TERMINAL BLOCK
SUB-PANEL J
PLUG BREAKS DA-
GLARESHIELD PANEL CY
EQUIPMENT
PLUG BRK CY-1
BELOW PILOT'S SEAT
T.B.
PANEL WA
EARTHS
TYPE 06/C1
NOTES: SEE SHEET 3
25-8NA5-1351 SH 2
DWG ISS - 1
ART ID # HA00F890701AA-1/2

SUB-PANEL L M.W.S. MODULE DETAILS

R/CHART SOCKET REF	INPUT CCT BOARD REF	R/CHART SOCKET REF	INPUT CCT BOARD REF	R/CHART SOCKET REF	INPUT CCT BOARD REF	R/CHART SOCKET REF	INPUT CCT BOARD REF
S1	B	S7	K	S10	G	S11	H
S2	J	S8	L				
S3	B	S9	L				
S4	U	S12	K				
S5	B						
S6	B						

PIN	DESIGNATION	DESIGNATION	DESIGNATION	DESIGNATION
1	RED TRIGGER	TRIGGER CIRCUITS	EARTH 2	EARTH 1
2	AMBER/WHITE TRIGGER		——	DIM LO
3	EARTH		AMBER LATCH	DIM CT
4	28V TEST SUPPLY	EARTH	——	——
5	I/P 1	I/P 1	AMBER TRIGGER	DIM CONTROL
6	O/P	O/P		——
7	I/P 2	I/P 2	——	AMBER LATCH
8	O/P	O/P	28V SUPPLY 2	——
9	I/P 3	I/P 3	——	RED LATCH 2
10	O/P	O/P	RED TRIGGER	——
11	I/P 4	I/P 4	——	RED LATCH 1
12	O/P	O/P	CANCEL 2	——
13	I/P 5	I/P 5	——	DIM HI
14	O/P	O/P	CANCEL 1	——
15	I/P 6	+28V TEST	——	SUPPLY 1
16	O/P	REPEATER O/P	RED LATCH 2	——
17	I/P 7	EARTH 2	——	FLASHER 1
18	O/P	REPEATER OUT	CANCEL 3	——
19	I/P 8	REPEATER IN	——	FLASHER 2
20	O/P	——	28V SUPPLY 2	——
21	I/P 9	CANCEL 3	——	SUPPLY 2
22	O/P	——	RED TRIGGER	——
23	I/P 10	AMBER TRIGGER OUT	——	ANN DIM FAIL
24	O/P		RED LATCH 1	——
25	EARTH	AMBER TRIGGER IN	——	DIM SENSE
26	REPEATER O/P		CANCEL 4	——
27	AMBER/WHITE TRIGGER	——	——	TEST
28	RED TRIGGER	28V SUPPLY 2	EARTH 1	EARTH 2

NOTE : FOR CIRCUIT DIAGRAM OF M.W.S. INPUT & CONTROL BOARDS SEE DRGS REF: -

25-6NF693-3A	BOARD B
25-6NF1909	BOARD G
25-6NF693-41A	BOARD J
25-7NF785-53A	BOARD L
25-8NF761-1A	BOARD H
25-7NF785-51A	BOARD K
25-8NF355-1A	BOARD Y
25-8NF355-17A	BOARD S

1. SEE SHEET 1
2. D.C. POWER SYSTEM (N01A)
3. D.C. POWER SYSTEM (N01B)
4. D.C. POWER DISTRIBUTION (N03A)
5. EARTH CHAIN (N03C)
6. STALL VANE HEAT (N25C)
7. ENGINE START & IGN (N04)
8. SECONDARY PWR SUPP (N05)
9. "B" WINDOW DE-ICE (N20B)
10. WINDSCREEN DE-ICE (N20)
11. CABIN AIR TEMP CTRL (N24)
12. PITOT HEATER (N25)
13. FIRE DETECTION (N27)
14. FUEL PRESSURE (N29)
15. OIL PRESS & TEMP (N30)
16. FUEL FILTER DE-ICE (N32)
17. BRAKE PRESSURE (N39)
18. HYD SYSTEMS INDRS (N42)
19. CABIN DEPRESSN (N44)
20. ENGINE DE-ICING (N45)
21. ICE DETECTION (N47)
22. REAR BAY O/HEAT (N54)
23. ENTRY DOOR WARNING (N57)
24. TFR FUEL COCK WARNG (N58)
25. THRUST REVERSERS (N60) (IF FITTED)
26. RUDDER BIAS (N62)
27. FUEL COMPUTER NO.1 (N63A)
28. FUEL COMPUTER NO.2 (N63B)
29. EMERG HYD LO LEVEL (N79)
30. ENG IDLE SPEED CONTL (N63C)
31. LONG RNG FUEL SYST (N90A&B)
32. STALL IDENT SYSTEM (N55)
33. PASSENGER OXYGEN PROVISION
34. BAGGAGE CPT SMOKE
35. SPARE I/O WIRED TO SPARE ANNUNCIATORS
36. SPARE I/O NOT WIRED TO ANNUNCIATORS
37. TKS SYSTEM (N46)
38. SPARE-ELECT (AMBER)
39. SPARE-FUEL (AMBER)
40. SPARE-SYSTEM CAPT OUT
41. CONTROL SURFACES OUT OF TRIM (N83)
42. SPARE (RED)
44. AIR BRAKE INDICTR (N40)
45. EMERGENCY LIGHTS (N73)
46. FLIGHT DATA RECORDER (S.O.O.) (N69B)

25-8NA5-1351 SH3
DWG ISS - 1

ART ID # HA00F890702AA

IDENT	PART NUMBER	1234567 NOMENCLATURE	EFFECT FROM TO	UNITS PER ASSY
		MASTER WARNING SYSTEM	222222 224224 226228 258258	
	25-8NA5-1351	WIRING DIAGRAM- (MOD 25A558A)		RF
AM-CD	6A43	.SWITCH- (V91929) (OPT (VK6596)) (USED WITH BASE: 2D70)		1
AN-CD	6AT4	.SWITCH- (V91929) (OPT (VK6596))		1
AP-CD	140-4537-01	.POTENTIOMETER-10K (VK1021)		1
B-CY	25-8NF615-3A	.ANNUNCIATOR		1
B-S1-DAL	25-6NF693-3A	.PRINTED CIRCUIT BOARD- TYPE B		1
B-S3-DAL	25-6NF693-3A	.PRINTED CIRCUIT BOARD- TYPE B		1
B-S5-DAL	25-6NF693-3A	.PRINTED CIRCUIT BOARD- TYPE B		1
B-S6-DAL	25-6NF693-3A	.PRINTED CIRCUIT BOARD- TYPE B		1
B24-DAD	483TCG11J25-1A	.CIRCUIT BREAKER-1A (VU0091)		1
B33-DAD	483TCG11J25-5A	.CIRCUIT BREAKER-5A (VU0091)		1
B34-DAD	483TCG11J25-1A	.CIRCUIT BREAKER-1A (VU0091)		1
C-Z-DAE	MJE2955	.TRANSISTOR- (VK5519) (USED ON HEATSINK: 25-8NF205-503A)		1
CC1-P	BAEREF000003123	.CONNECTOR-SOCKET (6027-20-41SNCONDB) (VK1793)		1
CC1-R	6026-20-41PN	.CONNECTOR-PIN (VK4161) (OPT 6026-20-41PNCONDB) (VK1793)		1
CC3-P	BAEREF000003123	.CONNECTOR-SOCKET (6027-20-41SNCONDB) (VK1793)		1
		MISSING ITEM NO. NOT APPLICABLE		

– ITEM NOT ILLUSTRATED

IDENT	PART NUMBER	1234567 NOMENCLATURE	EFFECT FROM TO	UNITS PER ASSY
CC3-R	6026-20-41PN	.CONNECTOR-PIN (VK4161) (OPT 6026-20-41PNC8) (V71468) (OPT (VK0316)) (OPT 6026-20-41PNCONDB) (VK1793)		1
CD1-P	BAEREF000003145	.CONNECTOR-SOCKET (6027-14-19SNCONDB) (VK1793)		1
CD1-R	BAEREF000003143	.CONNECTOR-PIN (6026-14-19PNCONDB) (VK1793)		1
CG6-P	MTC100YH2-009	.SHELL-PLUG (VK1010) (USED WITH WAFERS: TYPE A, MTC100KT2-1101 TYPE B, MTC100KT2-1102)	222222 224224 226228	1
CG6-P	MTC100YH2-009	.SHELL-PLUG (VK1010) (USED WITH INSERTS: PRIMARY MTC100YC1-001 SECONDARY MTC100YC1-002) (MOD 253252A)	258258	1
CG6-R	MTC100YH2-010	.SHELL-RECEPTACLE (VK1010) (USED WITH WAFERS: TYPE A, MTC100KT2-1103 TYPE B, MTC100KT2-1104)	222222 224224 226228	1
CG6-R	MTC100YH2-010	.SHELL-RECEPTACLE (VK1010) (USED WITH INSERTS: PRIMARY MTC100YC1-003 SECONDARY MTC100YC1-004) (MOD 253252A)	258258	1
CG7-P	MTC100YH2-009	.SHELL-PLUG (VK1010) (USED WITH WAFERS: TYPE A, MTC100KT2-1101 TYPE B, MTC100KT2-1102)	222222 224224 226228	1
CG7-P	MTC100YH2-009	.SHELL-PLUG (VK1010) (USED WITH INSERTS: PRIMARY MTC100YC1-001 SECONDARY MTC100YC1-002) (MOD 253252A)	258258	1

MISSING ITEM NO. NOT APPLICABLE

– ITEM NOT ILLUSTRATED

IDENT	PART NUMBER	1234567 NOMENCLATURE	EFFECT FROM TO	UNITS PER ASSY
CG7-R	MTC100YH2-010	.SHELL-RECEPTACLE (VK1010) (USED WITH WAFERS: TYPE A, MTC100KT2-1103 TYPE B, MTC100KT2-1104)	222222 224224 226228	1
CG7-R	MTC100YH2-010	.SHELL-RECEPTACLE (VK1010) (USED WITH INSERTS: PRIMARY MTC100YC1-003 SECONDARY MTC100YC1-004) (MOD 253252A)	258258	1
CY1-P	MTC100YH2-009	.SHELL-PLUG (VK1010) (USED WITH WAFERS: TYPE A, MTC100KT2-1103 TYPE B, MTC100KT2-1104)	222222 224224 226228	1
CY1-P	MTC100YH2-009	.SHELL-PLUG (VK1010) (USED WITH INSERTS: PRIMARY MTC100YC1-003 SECONDARY MTC100YC1-004) (MOD 253252A)	258258	1
CY1-R	MTC100YH2-010	.SHELL-RECEPTACLE (VK1010) (USED WITH WAFERS: TYPE A, MTC100KT2-1101 TYPE B, MTC100KT2-1102)	222222 224224 226228	1
CY1-R	MTC100YH2-010	.SHELL-RECEPTACLE (VK1010) (USED WITH INSERTS: PRIMARY MTC100YC1-001 SECONDARY MTC100YC1-002) (MOD 253252A)	258258	1
D-Z-DAE	MJE2955	.TRANSISTOR- (VK5519) (USED ON HEATSINK: 25-8NF205-503A)		1
DA-CC	C9032-001B	.LAMP MODULE- (VK0673)		1
DA14-P	MTC100YH1-003	.SHELL-PLUG (VK1010) (USED WITH WAFERS: TYPE A, MTC100KT1-1101 TYPE B, MTC100KT1-1102)	222222 224224 226228	1
DA14-P	MTC100YH1-003	.SHELL-PLUG (VK1010) (USED WITH INSERT: MTC100YC1-005) (MOD 253252A)	258258	1
		MISSING ITEM NO. NOT APPLICABLE		

– ITEM NOT ILLUSTRATED

IDENT	PART NUMBER	1234567 NOMENCLATURE	EFFECT FROM TO	UNITS PER ASSY
DA14-R	MTC100YH1-004	.SHELL-RECEPTACLE (VK1010) (USED WITH WAFERS: TYPE A, MTC100KT1-1103 TYPE B, MTC100KT1-1104)	222222 224224 226228	1
DA14-R	MTC100YH1-004	.SHELL-RECEPTACLE (VK1010) (USED WITH INSERT: MTC100YC1-006) (MOD 253252A)	258258	1
DA15-P	MTC100YH1-003	.SHELL-PLUG (VK1010) (USED WITH WAFERS: TYPE A, MTC100KT1-1101 TYPE B, MTC100KT1-1102)	222222 224224 226228	1
DA15-P	MTC100YH1-003	.SHELL-PLUG (VK1010) (USED WITH INSERT: MTC100YC1-005) (MOD 253252A)	258258	1
DA15-R	MTC100YH1-004	.SHELL-RECEPTACLE (VK1010) (USED WITH WAFERS: TYPE A, MTC100KT1-1103 TYPE B, MTC100KT1-1104)	222222 224224 226228	1
DA15-R	MTC100YH1-004	.SHELL-RECEPTACLE (VK1010) (USED WITH INSERT: MTC100YC1-006) (MOD 253252A)	258258	1
DA16-P	MTC100YH1-003	.SHELL-PLUG (VK1010) (USED WITH WAFERS: TYPE A, MTC100KT1-1101 TYPE B, MTC100KT1-1102)	222222 224224 226228	1
DA16-P	MTC100YH1-003	.SHELL-PLUG (VK1010) (USED WITH INSERT: MTC100YC1-005) (MOD 253252A)	258258	1
DA16-R	MTC100YH1-004	.SHELL-RECEPTACLE (VK1010) (USED WITH WAFERS: TYPE A, MTC100KT1-1103 TYPE B, MTC100KT1-1104)	222222 224224 226228	1
DA16-R	MTC100YH1-004	.SHELL-RECEPTACLE (VK1010) (USED WITH INSERT: MTC100YC1-006) (MOD 253252A)	258258	1

MISSING ITEM NO. NOT APPLICABLE

– ITEM NOT ILLUSTRATED

IDENT	PART NUMBER	1234567 NOMENCLATURE	EFFECT FROM TO	UNITS PER ASSY
DA17-P	MTC100YH1-003	.SHELL-PLUG (VK1010) (USED WITH WAFERS: TYPE A, MTC100KT1-1101 DUMMY, MTCX1X100-100)	222222 224224 226228	1
DA17-P	MTC100YH1-003	.SHELL-PLUG (VK1010) (USED WITH INSERT: MTC100YC1-005) (MOD 253252A)	258258	1
DA17-R	MTC100YH1-004	.SHELL-RECEPTACLE (VK1010) (USED WITH WAFERS: TYPE A, MTC100KT1-1103 DUMMY, MTCX1X100-100)	222222 224224 226228	1
DA17-R	MTC100YH1-004	.SHELL-RECEPTACLE (VK1010) (USED WITH INSERT: MTC100YC1-006) (MOD 253252A)	258258	1
DA18-P	MTC100YH1-003	.SHELL-PLUG (VK1010) (USED WITH WAFERS: TYPE A, MTC100KT1-1101 DUMMY, MTCX1X100-100)	222222 224224 226228	1
DA18-P	MTC100YH1-003	.SHELL-PLUG (VK1010) (USED WITH INSERT: MTC100YC1-005) (MOD 253252A)	258258	1
DA18-R	MTC100YH1-004	.SHELL-RECEPTACLE (VK1010) (USED WITH WAFERS: TYPE A, MTC100KT1-1103 DUMMY, MTCX1X100-100)	222222 224224 226228	1
DA18-R	MTC100YH1-004	.SHELL-RECEPTACLE (VK1010) (USED WITH INSERT: MTC100YC1-006) (MOD 253252A)	258258	1
DA24-P	MTC100YH1-003	.SHELL-PLUG (VK1010) (USED WITH WAFERS: TYPE A, MTC100KT1-1101 TYPE B, MTC100KT1-1102)	222222 224224 226228	1
DA24-P	MTC100YH1-003	.SHELL-PLUG (VK1010) (USED WITH INSERT: MTC100YC1-005) (MOD 253252A)	258258	1
		MISSING ITEM NO. NOT APPLICABLE		

– ITEM NOT ILLUSTRATED

IDENT	PART NUMBER	1234567 NOMENCLATURE	EFFECT FROM TO	UNITS PER ASSY
DA24-R	MTC100YH1-004	.SHELL-RECEPTACLE (VK1010) (USED WITH WAFERS: TYPE A, MTC100KT1-1103 TYPE B, MTC100KT1-1104)	222222 224224 226228	1
DA24-R	MTC100YH1-004	.SHELL-RECEPTACLE (VK1010) (USED WITH INSERT: MTC100YC1-006) (MOD 253252A)	258258	1
DA25-P	MTC100YH1-003	.SHELL-PLUG (VK1010) (USED WITH WAFERS: TYPE A, MTC100KT1-1101 TYPE B, MTC100KT1-1102)	222222 224224 226228	1
DA25-P	MTC100YH1-003	.SHELL-PLUG (VK1010) (USED WITH INSERT: MTC100YC1-005) (MOD 253252A)	258258	1
DA25-R	MTC100YH1-004	.SHELL-RECEPTACLE (VK1010) (USED WITH WAFERS: TYPE A, MTC100KT1-1103 TYPE B, MTC100KT1-1104)	222222 224224 226228	1
DA25-R	MTC100YH1-004	.SHELL-RECEPTACLE (VK1010) (USED WITH INSERT: MTC100YC1-006) (MOD 253252A)	258258	1
DA26-P	MTC100YH1-003	.SHELL-PLUG (VK1010) (USED WITH WAFERS: TYPE A, MTC100KT1-1101 TYPE B, MTC100KT1-1102)	222222 224224 226228	1
DA26-P	MTC100YH1-003	.SHELL-PLUG (VK1010) (USED WITH INSERT: MTC100YC1-005) (MOD 253252A)	258258	1
DA26-R	MTC100YH1-004	.SHELL-RECEPTACLE (VK1010) (USED WITH WAFERS: TYPE A, MTC100KT1-1103 TYPE B, MTC100KT1-1104)	222222 224224 226228	1
DA26-R	MTC100YH1-004	.SHELL-RECEPTACLE (VK1010) (USED WITH INSERT: MTC100YC1-006) (MOD 253252A)	258258	1
		MISSING ITEM NO. NOT APPLICABLE		

– ITEM NOT ILLUSTRATED

IDENT	PART NUMBER	1234567 NOMENCLATURE	EFFECT FROM TO	UNITS PER ASSY
DA27-P	MTC100YH1-003	.SHELL-PLUG (VK1010) (USED WITH WAFERS: TYPE A, MTC100KT1-1101 TYPE B, MTC100KT1-1102)	222222 224224 226228	1
DA27-P	MTC100YH1-003	.SHELL-PLUG (VK1010) (USED WITH INSERT: MTC100YC1-005) (MOD 253252A)	258258	1
DA27-R	MTC100YH1-004	.SHELL-RECEPTACLE (VK1010) (USED WITH WAFERS: TYPE A, MTC100KT1-1103 TYPE B, MTC100KT1-1104)	222222 224224 226228	1
DA27-R	MTC100YH1-004	.SHELL-RECEPTACLE (VK1010) (USED WITH INSERT: MTC100YC1-006) (MOD 253252A)	258258	1
DA30-P	MTC100YH1-003	.SHELL-PLUG (VK1010) (USED WITH WAFERS: TYPE A, MTC100KT1-1101 DUMMY, MTCX1X100-100)	222222 224224 226228	1
DA30-P	MTC100YH1-003	.SHELL-PLUG (VK1010) (USED WITH INSERT: MTC100YC1-005) (MOD 253252A)	258258	1
DA30-R	MTC100YH1-004	.SHELL-RECEPTACLE (VK1010) (USED WITH WAFERS: TYPE A, MTC100KT1-1103 DUMMY, MTCX1X100-100)	222222 224224 226228	1
DA30-R	MTC100YH1-004	.SHELL-RECEPTACLE (VK1010) (USED WITH INSERT: MTC100YC1-006) (MOD 253252A)	258258	1
DA31-P	MTC100YH2-009	.SHELL-PLUG (VK1010) (USED WITH WAFERS: TYPE A, MTC100KT2-1101 TYPE B, MTC100KT2-1102)	222222 224224 226228	1
		MISSING ITEM NO. NOT APPLICABLE		

– ITEM NOT ILLUSTRATED

IDENT	PART NUMBER	1234567 NOMENCLATURE	EFFECT FROM TO	UNITS PER ASSY
DA31-P	MTC100YH2-009	.SHELL-PLUG (VK1010) (USED WITH INSERTS: PRIMARY MTC100YC1-001 SECONDARY MTC100YC1-002) (MOD 253252A)	258258	1
DA31-R	MTC100YH2-010	.SHELL-RECEPTACLE (VK1010) (USED WITH WAFERS: TYPE A, MTC100KT2-1103 TYPE B, MTC100KT2-1104)	222222 224224 226228	1
DA31-R	MTC100YH2-010	.SHELL-RECEPTACLE (VK1010) (USED WITH INSERTS: PRIMARY MTC100YC1-003 SECONDARY MTC100YC1-004) (MOD 253252A)	258258	1
DA33-P	MTC100YH2-009	.SHELL-PLUG (VK1010) (USED WITH WAFERS: TYPE A, MTC100KT2-1101 TYPE B, MTC100KT2-1102)	222222 224224 226228	1
DA33-P	MTC100YH2-009	.SHELL-PLUG (VK1010) (USED WITH INSERTS: PRIMARY MTC100YC1-001 SECONDARY MTC100YC1-002) (MOD 253252A)	258258	1
DA33-R	MTC100YH2-010	.SHELL-RECEPTACLE (VK1010) (USED WITH WAFERS: TYPE A, MTC100KT2-1103 TYPE B, MTC100KT2-1104)	222222 224224 226228	1
DA33-R	MTC100YH2-010	.SHELL-RECEPTACLE (VK1010) (USED WITH INSERTS: PRIMARY MTC100YC1-003 SECONDARY MTC100YC1-004) (MOD 253252A)	258258	1
DA6-P	MTC100YH2-009	.SHELL-PLUG (VK1010) (USED WITH WAFERS: TYPE A, MTC100KT2-1101 TYPE B, MTC100KT2-1102)	222222 224224 226228	1
DA6-P	MTC100YH2-009	.SHELL-PLUG (VK1010) (USED WITH INSERTS: PRIMARY MTC100YC1-001 SECONDARY MTC100YC1-002) (MOD 253252A)	258258	1

MISSING ITEM NO. NOT APPLICABLE

– ITEM NOT ILLUSTRATED

IDENT	PART NUMBER	1234567 NOMENCLATURE	EFFECT FROM TO	UNITS PER ASSY
DA6-R	MTC100YH2-010	.SHELL-RECEPTACLE (VK1010) (USED WITH WAFERS: TYPE A, MTC100KT2-1103 TYPE B, MTC100KT2-1104)	222222 224224 226228	1
DA6-R	MTC100YH2-010	.SHELL-RECEPTACLE (VK1010) (USED WITH INSERTS: PRIMARY MTC100YC1-003 SECONDARY MTC100YC1-004) (MOD 253252A)	258258	1
DB-CC	C9032-001B	.LAMP MODULE- (VK0673)		1
DC-CC	C9032-001B	.LAMP MODULE- (VK0673)		1
DD-CC	C9032-001B	.LAMP MODULE- (VK0673)		1
DE-CC	C9032-001B	.LAMP MODULE- (VK0673)		1
DF-CC	C9032-001B	.LAMP MODULE- (VK0673)		1
DG-CC	C9032-001B	.LAMP MODULE- (VK0673)		1
DH-CC	C9032-001B	.LAMP MODULE- (VK0673)		1
DJ-CC	C9032-001B	.LAMP MODULE- (VK0673)		1
DK-CC	C9032-001B	.LAMP MODULE- (VK0673)		1
DL-CC	C9032-001B	.LAMP MODULE- (VK0673)		1
DM-CC	C9032-001B	.LAMP MODULE- (VK0673)		1
DN-CC	C9032-001B	.LAMP MODULE- (VK0673)		1
DP-CC	C9032-001B	.LAMP MODULE- (VK0673)		1
DR-CC	C9032-001B	.LAMP MODULE- (VK0673)		1
DS-CC	C9032-001B	.LAMP MODULE- (VK0673)		1
DT-CC	C9032-001B	.LAMP MODULE- (VK0673)		1
DV-CC	C9032-001B	.LAMP MODULE- (VK0673)		1
DW-CC	C9032-001B	.LAMP MODULE- (VK0673)		1
EA-CC	C9032-001B	.LAMP MODULE- (VK0673)		1
		MISSING ITEM NO. NOT APPLICABLE		

– ITEM NOT ILLUSTRATED

IDENT	PART NUMBER	1234567 NOMENCLATURE	EFFECT FROM TO	UNITS PER ASSY
EB-CC	C9032-001B	.LAMP MODULE- (VK0673)		1
EC-CC	C9032-001B	.LAMP MODULE- (VK0673)		1
ED-CC	C9032-001B	.LAMP MODULE- (VK0673)		1
EE-CC	C9032-001B	.LAMP MODULE- (VK0673)		1
EF-CC	C9032-001B	.LAMP MODULE- (VK0673)		1
EF-DAJ	5910-99-0124911	.CAPACITOR- (VK1672)		1
EG-CC	C9032-001B	.LAMP MODULE- (VK0673)		1
EG-DAJ	5910-99-0124911	.CAPACITOR- (VK1672)		1
EH-CC	C9032-001B	.LAMP MODULE- (VK0673)		1
EJ-CC	C9032-001B	.LAMP MODULE- (VK0673)		1
EK-CC	C9032-001B	.LAMP MODULE- (VK0673)		1
EL-CC	C9032-001B	.LAMP MODULE- (VK0673)		1
EM-CC	C9032-001B	.LAMP MODULE- (VK0673)		1
EN-CC	C9032-001B	.LAMP MODULE- (VK0673)		1
EP-CC	C9032-001B	.LAMP MODULE- (VK0673)		1
ER-CC	C9032-001B	.LAMP MODULE- (VK0673)		1
ET-CC	C9032-001B	.LAMP MODULE- (VK0673)		1
F-CY	25-8NF615-1A	.ANNUNCIATOR		1
FB-CG	C9032-001B	.LAMP MODULE- (VK0673)		1
FC-CG	C9032-001B	.LAMP MODULE- (VK0673)		1
FD-CG	C9032-001B	.LAMP MODULE- (VK0673)		1
FE-CG	C9032-001B	.LAMP MODULE- (VK0673)		1
FG-CC	C9032-001B	.LAMP MODULE- (VK0673)		1
G-S10-DAL	25-6NF1909A	.PRINTED CIRCUIT BOARD- TYPE G		1
GB-CG	C9032-001B	.LAMP MODULE- (VK0673)		1
		MISSING ITEM NO. NOT APPLICABLE		

– ITEM NOT ILLUSTRATED

IDENT	PART NUMBER	1234567 NOMENCLATURE	EFFECT FROM TO	UNITS PER ASSY
GC-CG	C9032-001B	.LAMP MODULE- (VK0673)		1
GD-CG	C9032-001B	.LAMP MODULE- (VK0673)		1
GF-CG	C9032-001B	.LAMP MODULE- (VK0673)		1
GG-CG	C9032-001B	.LAMP MODULE- (VK0673)		1
GH-CG	C9032-001B	.LAMP MODULE- (VK0673)		1
GK-CG	C9032-001B	.LAMP MODULE- (VK0673)		1
GL-CG	C9032-001B	.LAMP MODULE- (VK0673)		1
GM-CG	C9032-001B	.LAMP MODULE- (VK0673)		1
GR-CG	C9032-001B	.LAMP MODULE- (VK0673)		1
GS-CG	C9032-001B	.LAMP MODULE- (VK0673)		1
GT-CG	C9032-001B	.LAMP MODULE- (VK0673)		1
GU-CG	C9032-001B	.LAMP MODULE- (VK0673)		1
H-S11-DAL	25-8NF761-41A	.PRINTED CIRCUIT BOARD- TYPE H		1
HB-CG	C9032-001B	.LAMP MODULE- (VK0673)		1
HC-CG	C9032-001B	.LAMP MODULE- (VK0673)		1
HD-CG	C9032-001B	.LAMP MODULE- (VK0673)		1
HF-CG	C9032-001B	.LAMP MODULE- (VK0673)		1
HG-CG	C9032-001B	.LAMP MODULE- (VK0673)		1
HH-CG	C9032-001B	.LAMP MODULE- (VK0673)		1
HK-CG	C9032-001B	.LAMP MODULE- (VK0673)		1
HL-CG	C9032-001B	.LAMP MODULE- (VK0673)		1
HM-CG	C9032-001B	.LAMP MODULE- (VK0673)		1
HP-CG	C9032-001B	.LAMP MODULE- (VK0673)		1
HR-CG	C9032-001B	.LAMP MODULE- (VK0673)		1
HS-CG	C9032-001B	.LAMP MODULE- (VK0673)		1
		MISSING ITEM NO. NOT APPLICABLE		

– ITEM NOT ILLUSTRATED

IDENT	PART NUMBER	1234567 NOMENCLATURE	EFFECT FROM TO	UNITS PER ASSY
HT-CG	C9032-001B	.LAMP MODULE- (VK0673)		1
HU-CG	C9032-001B	.LAMP MODULE- (VK0673)		1
HV-CG	C9032-001B	.LAMP MODULE- (VK0673)		1
HX-CG	C9032-001B	.LAMP MODULE- (VK0673)		1
J-S2-DAL	25-6NF693-41A	.PRINTED CIRCUIT BOARD- TYPE J (UNIT EXCHANGE ITEM)		1
JU-CG	C9032-001B	.LAMP MODULE- (VK0673)		1
JV-CG	C9032-001B	.LAMP MODULE- (VK0673)		1
JX-CG	C9032-001B	.LAMP MODULE- (VK0673)		1
K-S7-DAL	25-7NF785-51A	.PRINTED CIRCUIT BOARD- TYPE K		1
L-S8-DAL	25-7NF785-53A	.PRINTED CIRCUIT BOARD- TYPE L		1
L-S9-DAL	25-7NF785-53A	.PRINTED CIRCUIT BOARD- TYPE L		1
PP	HWBUN1146D10B	.TERMINAL BLOCK- (VK0574)		1
S-DAE	25-8NF405-503A	.HEAT SINK ASSY- (COMPRISING: TERMINAL BLOCK HWBUN1736S10B (VK0574))		1
SQ	HWBUN1146D10B	.TERMINAL BLOCK- (VK0574)		1
S1-DAL-R	225-22811-201	.CONNECTOR-PCB (VK1100)		1
S10-DAL-R	225-22811-201	.CONNECTOR-PCB (VK1100)		1
S11-DAL-R	225-22811-201	.CONNECTOR-PCB (VK1100)		1
S2-DAL-R	225-22811-201	.CONNECTOR-PCB (VK1100)		1
S3-DAL-R	225-22811-201	.CONNECTOR-PCB (VK1100)		1
S4-DAL-R	225-22811-201	.CONNECTOR-PCB (VK1100)		1
S5-DAL-R	225-22811-201	.CONNECTOR-PCB (VK1100)		1
S6-DAL-R	225-22811-201	.CONNECTOR-PCB (VK1100)		1
S7-DAL-R	225-22811-201	.CONNECTOR-PCB (VK1100)		1
		MISSING ITEM NO. NOT APPLICABLE		

- ITEM NOT ILLUSTRATED

IDENT	PART NUMBER	1234567 NOMENCLATURE	EFFECT FROM TO	UNITS PER ASSY
S8-DAL-R	225-22811-201	.CONNECTOR-PCB (VK1100)		1
S9-DAL-R	225-22811-201	.CONNECTOR-PCB (VK1100)		1
T-CD	HWBUN1736D6B	.TERMINAL BLOCK- (VK0574)		1
TB-DAJ	HWBUN1146D10B	.TERMINAL BLOCK- (VK0574)		1
U-S4-DAL	25-8NF355-29A	.PRINTED CIRCUIT BOARD- TYPE U		1
V-CD	99-630	.INDICATOR- (V32245)		1
Y	HWBUN1736D10B	.TERMINAL BLOCK- (VK0574)		1
Z-DAE	25-8NF205-503A	.HEATSINK ASSY- (COMPRISING: TRANSISTORS MJE2955 (VK5519) TERMINAL BLOCK HWBUN1736S10B (VK0574))		1
		MISSING ITEM NO. NOT APPLICABLE		

– ITEM NOT ILLUSTRATED

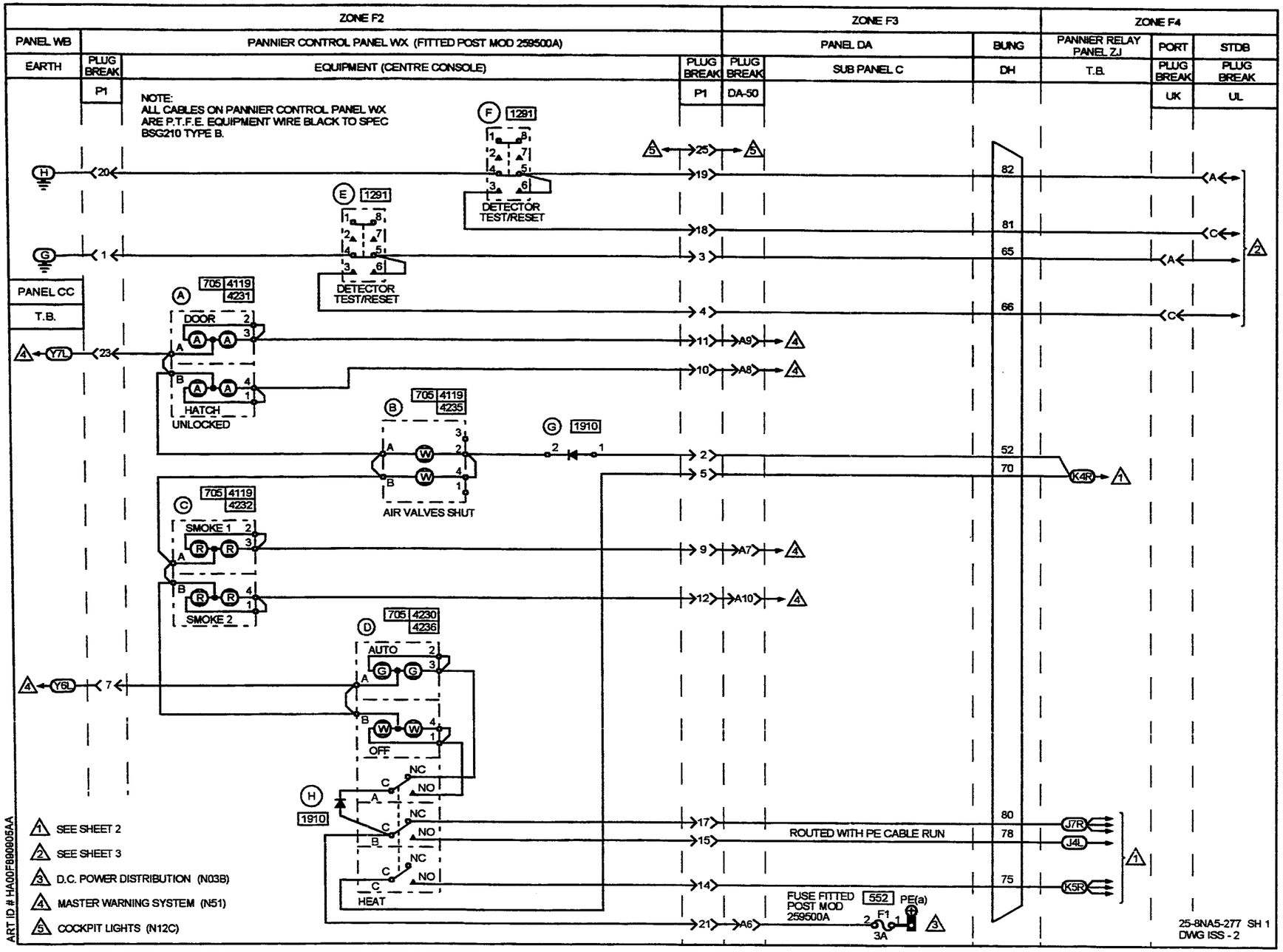
ZONE F2
ZONE F3
ZONE F4
PANEL WB
PANNIER CONTROL PANEL WX (FITTED POST MOD 259500A)
PANEL DA
BUNG
PANNIER RELAY PANEL ZJ
PORT
STDB
EARTH
PLUG BREAK
EQUIPMENT (CENTRE CONSOLE)
SUB PANEL C
DH
T.B.
P1
DA-50
UK
UL
NOTE:
ALL CABLES ON PANNIER CONTROL PANEL WX ARE P.T.F.E. EQUIPMENT WIRE BLACK TO SPEC BSG210 TYPE B.
DETECTOR TEST/RESET
PANEL CC
DOOR
HATCH UNLOCKED
AIR VALVES SHUT
SMOKE 1
SMOKE 2
AUTO
OFF
HEAT
NC
NO
ROUTED WITH PE CABLE RUN
FUSE FITTED POST MOD 259500A
PE(a)
F1
3A
SEE SHEET 2
SEE SHEET 3
D.C. POWER DISTRIBUTION (N03B)
MASTER WARNING SYSTEM (N51)
COCKPIT LIGHTS (N12C)
ART ID # HA00FB909005AA
25-8NA5-277 SH 1
DWG ISS - 2

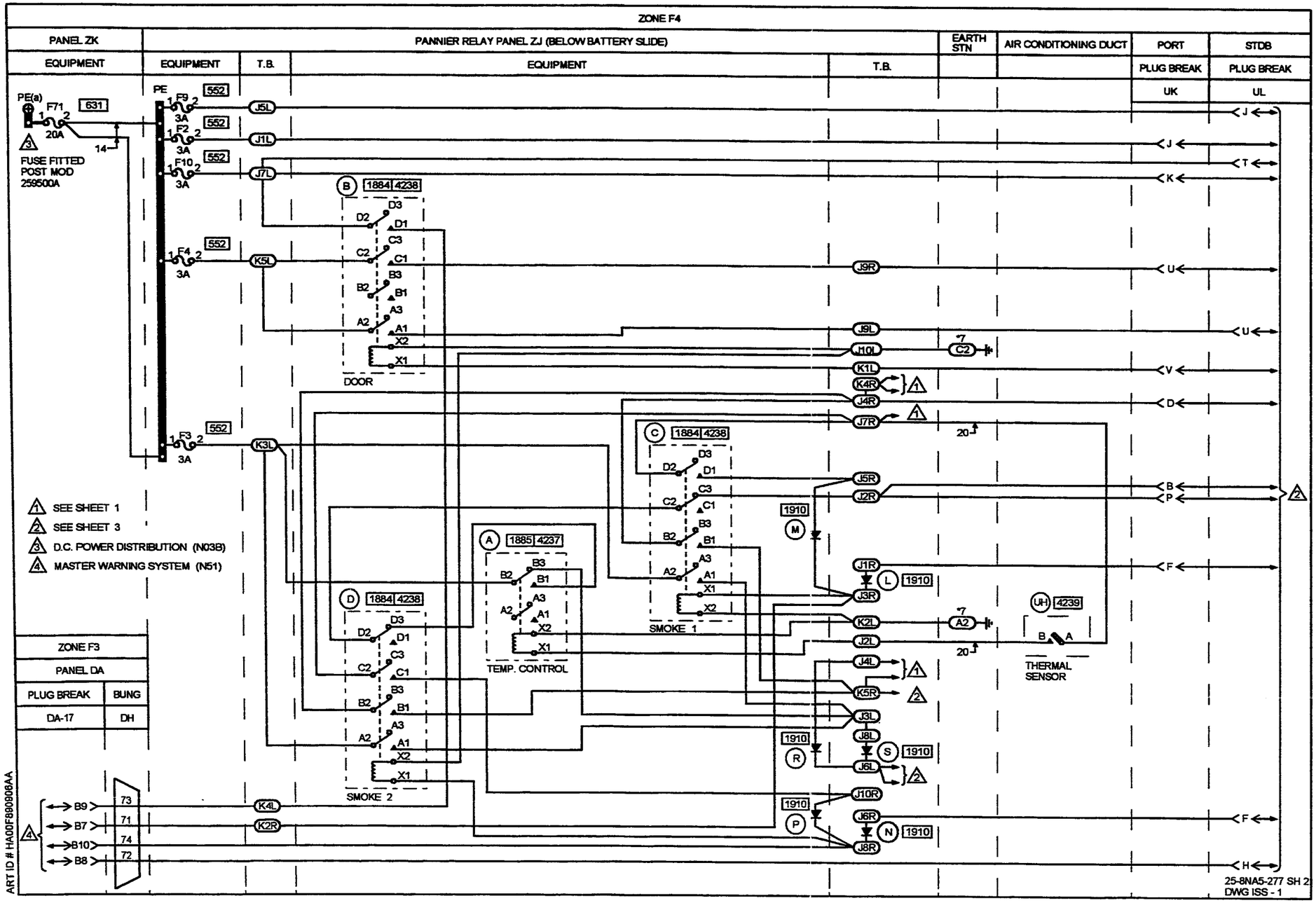
ZONE F4
PANEL ZK
EQUIPMENT
PANNIER RELAY PANEL ZJ (BELOW BATTERY SLIDE)
EQUIPMENT
T.B.
EQUIPMENT
T.B.
EARTH STN
AIR CONDITIONING DUCT
PORT
PLUG BREAK
UK
STDB
PLUG BREAK
UL
PE(a)
F71
631
20A
14
FUSE FITTED POST MOD 259500A
PE
F9
552
3A
J5L
F2
552
3A
J1L
F10
552
3A
J7L
F4
552
3A
K5L
F3
552
3A
K3L
B
1884 4238
D3
D2
D1
C3
C2
C1
B3
B2
B1
A3
A2
A1
X2
X1
DOOR
J9R
J9L
J10L
K1L
K4R
J4R
J7R
C
1884 4238
J5R
J2R
1910
M
J1R
L
1910
J3R
K2L
J2L
J4L
K5R
J3L
J8L
1910
R
S
1910
J6L
J10R
1910
P
J6R
N
1910
J8R
A
1885 4237
TEMP. CONTROL
D
1884 4238
SMOKE 2
SMOKE 1
C2
A2
U-H
4239
THERMAL SENSOR
B
A
J
T
K
U
V
D
B
P
F
H
SEE SHEET 1
SEE SHEET 3
D.C. POWER DISTRIBUTION (N03B)
MASTER WARNING SYSTEM (N51)
ZONE F3
PANEL DA
PLUG BREAK
BUNG
DA-17
DH
B9
B7
B10
B8
73
71
74
72
K4L
K2R
ART ID # HA00F890908AA
25-8NA5-277 SH 2
DWG ISS - 1

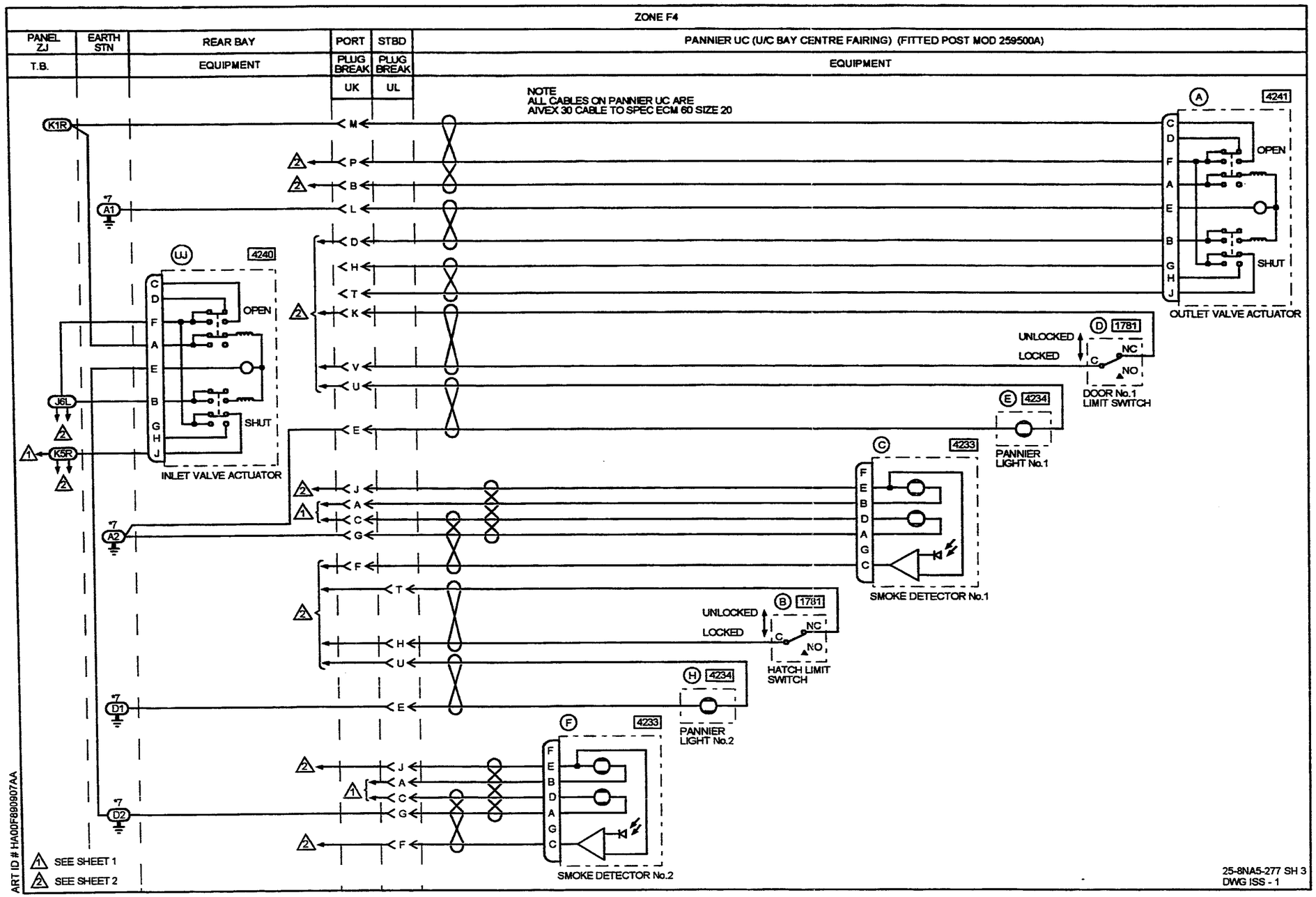
ZONE F4
PANEL ZJ
EARTH STN
REAR BAY
PORT
STBD
PANNIER UC (U/C BAY CENTRE FAIRING) (FITTED POST MOD 259500A)
T.B.
EQUIPMENT
PLUG BREAK
PLUG BREAK
EQUIPMENT
UK
UL
NOTE
ALL CABLES ON PANNIER UC ARE
AIVEX 30 CABLE TO SPEC ECM 60 SIZE 20
K1R
A1
A2
D1
D2
J6L
K5R
4240
4241
4233
4234
1781
OPEN
SHUT
INLET VALVE ACTUATOR
OUTLET VALVE ACTUATOR
UNLOCKED
LOCKED
NC
NO
DOOR No.1 LIMIT SWITCH
PANNIER LIGHT No.1
SMOKE DETECTOR No.1
HATCH LIMIT SWITCH
PANNIER LIGHT No.2
SMOKE DETECTOR No.2
SEE SHEET 1
SEE SHEET 2
ART ID # HA00F890907AA
25-8NA5-277 SH 3
DWG ISS - 1

IDENT	PART NUMBER	1234567 NOMENCLATURE	EFFECT FROM TO	UNITS PER ASSY
		BAGGAGE PANNIER	113113 124124 144144 235235 237237	
	25-8NA5-277	WIRING DIAGRAM- (MOD 259499A)		RF
A-UC	HTE250017	.OUTLET VALVE ACTUATOR- (VK2617)		1
A-WX	99-930	.INDICATOR LAMP- (V32245) (USED WITH HOLDER: B375-01 (VK0673))		1
A-ZJ	M300-1264	.RELAY- (VK6265) (USED WITH SOCKET: M12883-41-16 (V81349))		1
B-UC	1HM1	.LIMIT SWITCH- (V91929) (OPT (VK6596)) (USED WITH ACTUATOR: JS151)		1
B-WX	99-930	.INDICATOR LAMP- (V32245) (USED WITH HOLDER: B375-01 (VK0673))		1
B-ZJ	M400-1265	.RELAY- (VK6265) (USED WITH SOCKET: M12883-40-19 (V81349))		1
C-UC	30-231-15	.DETECTOR-NO.1 (V2P918)		1
C-WX	99-930	.INDICATOR LAMP- (V32245) (USED WITH HOLDER: B375-01 (VK0673))		1
C-ZJ	M400-1265	.RELAY- (VK6265) (USED WITH SOCKET: M12883-40-19 (V81349))		1
		MISSING ITEM NO. NOT APPLICABLE		

– ITEM NOT ILLUSTRATED

IDENT	PART NUMBER	1234567 NOMENCLATURE	EFFECT FROM TO	UNITS PER ASSY
D-UC	1HM1	.LIMIT SWITCH- (V91929) (OPT (VK6596)) (USED WITH ACTUATOR: JS151)		1
D-WX	99-923	.LAMP SWITCH MODULE- (V32245) (USED WITH HOLDER: B375-01 (VK0673))		1
D-ZJ	M400-1265	.RELAY- (VK6265) (USED WITH SOCKET: M12883-40-19 (V81349))		1
DA17-P	MTC100YH1-003	.SHELL-PLUG (VK1010) (USED WITH WAFERS: TYPE A, MTC100KT1-1101 DUMMY B, MTCX1X100-100)		1
DA17-R	MTC100YH1-004	.SHELL-RECEPTACLE (VK1010) (USED WITH WAFERS: TYPE A, MTC100KT1-1103 DUMMY B, MTCX1X100-100)		1
DA50-P	MTC100YH1-003	.SHELL-PLUG (VK1010) (USED WITH WAFERS: TYPE A, MTC100KT1-1101 DUMMY B, MTCX1X100-100)		1
DA50-R	MTC100YH1-004	.SHELL-RECEPTACLE (VK1010) (USED WITH WAFERS: TYPE A, MTC100KT1-1103 DUMMY B, MTCX1X100-100)		1
DH	422254-9	.BUNG- (VK1793)		1
E-UC	25-8FR445-1A	.LIGHT ASSY- (COMPRISING OF: LAMP HOLDER 12-271 (V95263) FILAMENT GE308 (V58888))		1
E-WX	WC1503	.SWITCH- (VK0653)		1
F-UC	30-231-15	.SMOKE DETECTOR-NO2 (V2P918)		1
F-WX	WC1503	.SWITCH- (VK0653)		1
		MISSING ITEM NO. NOT APPLICABLE		

– ITEM NOT ILLUSTRATED

IDENT	PART NUMBER	1234567 NOMENCLATURE	EFFECT FROM TO	UNITS PER ASSY
F1-DAC	5920-99-0120075	.FUSE-3AMP (VK0657)		1
F10-ZJ	5920-99-0120075	.FUSE-3AMP (VK0657)		1
F2-ZJ	5920-99-0120075	.FUSE-3AMP (VK0657)		1
F3-ZJ	5920-99-0120075	.FUSE-3AMP (VK0657)		1
F4-ZJ	5920-99-0120075	.FUSE-3AMP (VK0657)		1
F71-ZK	5920-99-0120080	.FUSE-20AMP (VK0657)		1
F9-ZJ	5920-99-0120075	.FUSE-3AMP (VK0657)		1
G-WX	BYW54	.DIODE- (VK0004) (USED WITH TERMINAL: 571-4101-01-05-19 (VK3105))		1
H-UC	25-8FR445-1A	.LIGHT ASSY- (COMPRISING OF: LAMP HOLDER 12-271 (V95263) FILAMENT GE308 (V58888))		1
H-WX	BYW54	.DIODE- (VK0004)		1
J-ZJ	HWBUN1146D10B	.TERMINAL BLOCK- (VK0574)		1
K-ZJ	HWBUN1146D5B	.TERMINAL BLOCK- (VK0574)		1
L-ZJ	1N4005	.DIODE- (VK5519) (OPT BYW54 (VK0004))		1
M-ZJ	1N4005	.DIODE- (VK5519) (OPT BYW54 (VK0004))		1
N-ZJ	1N4005	.DIODE- (VK5519) (OPT BYW54 (VK0004))		1
P-ZJ	1N4005	.DIODE- (VK5519) (OPT BYW54 (VK0004))		1
		MISSING ITEM NO. NOT APPLICABLE		

– ITEM NOT ILLUSTRATED

IDENT	PART NUMBER	1234567 NOMENCLATURE	EFFECT FROM TO	UNITS PER ASSY
P1-WX-P	DBMA25S	.CONNECTOR-SOCKET (V71468) (OPT (VK0316)) (USED WITH: SCREWLOCK D20419-16 SHELL DB20962)		1
P1-WX-R	DBMA25P	.CONNECTOR-PIN (V71468) (OPT (VK0316)) (USED WITH SCREWLOCK: D20418-2)		1
R-ZJ	1N4005	.DIODE- (VK5519) (OPT BYW54 (VK0004))		1
S-ZJ	1N4005	.DIODE- (VK5519) (OPT BYW54 (VK0004))		1
UH	67121-53-068	.SENSOR- (V73168) (USED WITH: SOCKET MS3456L10SL4SN (V96906) OUTLET 057-0683-002 (V+0862))		1
UJ	HTE900048	.VALVE- (VK2617) (USED WITH: SOCKET MS3476L12-10S (V96906) OUTLET MS3417-12N (V+0862))		1
UK-P	MS3476L14-19PN	.CONNECTOR-PLUG (V96906) (USED WITH OUTLET: MS3417-14N)		1
UK-R	MS3470L14-19SN	.CONNECTOR-SOCKET (V96906) (USED WITH OUTLET: MS3152-14)		1
UL-P	MS3476L14-19PW	.CONNECTOR-PLUG (V96906) (USED WITH OUTLET: MS3417-14N)		1
UL-R	MS3470L14-19SW	.CONNECTOR-SOCKET (V96906) (USED WITH OUTLET: MS3152-14)		1
		MISSING ITEM NO. NOT APPLICABLE		

– ITEM NOT ILLUSTRATED

IDENT	PART NUMBER	1234567 NOMENCLATURE	EFFECT FROM TO	UNITS PER ASSY
Y-CC	HWBUN1736D10B	.TERMINAL BLOCK- (VK0574)		1
		MISSING ITEM NO. NOT APPLICABLE		

– ITEM NOT ILLUSTRATED

CHAPTER

32

LANDING GEAR

CHAPTER 32 - LANDING GEAR

TABLE OF CONTENTS

SUBJECT	CHAPTER SECTION UNIT	FIGURE	EFFECT
POSITION AND WARNING	32-60-00		
LANDING GEAR INDICATION	32-60-10	4	091114
			116117
			119145
			147147
			149276
LANDING GEAR LEVER LOCK	32-60-30	2	091093
			095096
			098101
LANDING GEAR LEVER LOCK	32-60-30	3	094094
			097097
			102276
LANDING GEAR STANDBY INDICATION	32-60-20	2	091276

CH-SECT-UNIT-FIG	PAGE NO.	DATE
*32	1	AUG 31/03
32-60-00	1	MAY 31/02
32-60-10- 4	0	NOV 30/02
32-60-10- 4	0A	MAY 31/02
32-60-10- 4	0B	MAY 31/02
32-60-10- 4	1	NOV 30/02
32-60-10- 4	2	NOV 30/02
32-60-10- 4	3	MAY 31/02
32-60-10- 4	4	MAY 31/02
32-60-10- 4	5	MAY 31/02
32-60-10- 4	6	MAY 31/02
32-60-10- 4	7	MAY 31/02
*32-60-10- 4	8	AUG 31/03
*32-60-10- 4	9	AUG 31/03
32-60-20- 2	0	NOV 30/02
32-60-20- 2	1	MAY 31/02
32-60-20- 2	2	MAY 31/02
32-60-30- 2	0	NOV 30/02
32-60-30- 2	1	MAY 31/02
32-60-30- 2	2	MAY 31/02
32-60-30- 3	0	NOV 30/02
32-60-30- 3	1	MAY 31/02
32-60-30- 3	2	MAY 31/02
32-60-30- 3	3	MAY 31/02

CH-SECT-UNIT-FIG	PAGE NO.	DATE

*THE ASTERISK INDICATES PAGES CHANGED OR ADDED BY THE CURRENT REVISION

POSITION AND WARNING

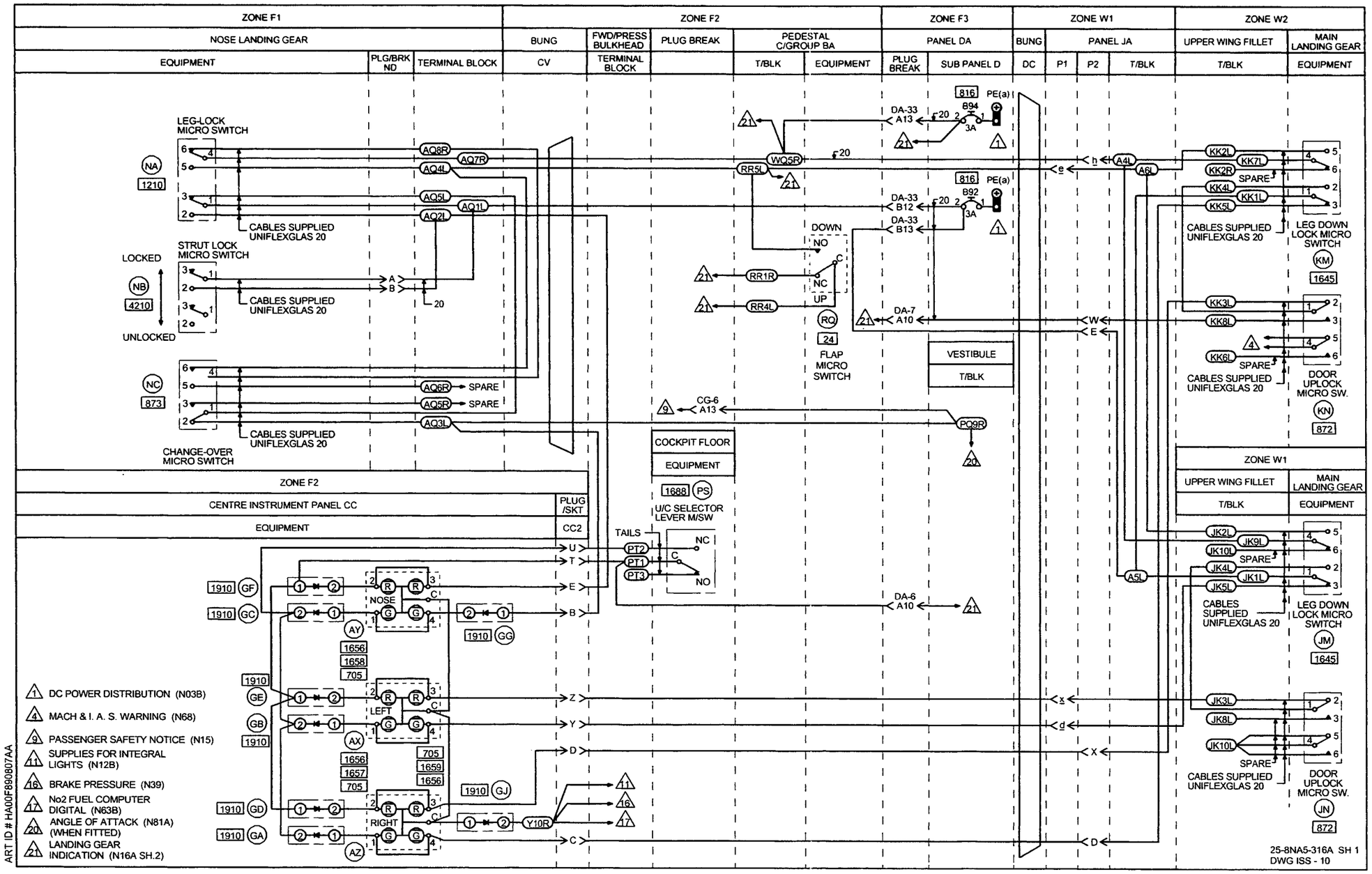
ZONE F1
NOSE LANDING GEAR
EQUIPMENT
PLG/BRK ND
TERMINAL BLOCK
ZONE F2
BUNG
CV
FWD/PRESS BULKHEAD
TERMINAL BLOCK
PLUG BREAK
PEDESTAL C/GROUP BA
T/BLK
EQUIPMENT
ZONE F3
PANEL DA
PLUG BREAK
SUB PANEL D
ZONE W1
BUNG
DC
PANEL JA
P1
P2
T/BLK
ZONE W2
UPPER WING FILLET
T/BLK
MAIN LANDING GEAR
EQUIPMENT
LEG-LOCK MICRO SWITCH
STRUT LOCK MICRO SWITCH
LOCKED
UNLOCKED
CHANGE-OVER MICRO SWITCH
CABLES SUPPLIED UNIFLEXGLAS 20
SPARE
LEG DOWN LOCK MICRO SWITCH
DOOR UPLOCK MICRO SW.
FLAP MICRO SWITCH
DOWN
UP
VESTIBULE
T/BLK
COCKPIT FLOOR
EQUIPMENT
U/C SELECTOR LEVER M/SW
TAILS
ZONE F2
CENTRE INSTRUMENT PANEL CC
PLUG /SKT
EQUIPMENT
CC2
NOSE
LEFT
RIGHT
ZONE W1
UPPER WING FILLET
T/BLK
MAIN LANDING GEAR
EQUIPMENT
1 DC POWER DISTRIBUTION (N03B)
4 MACH & I. A. S. WARNING (N68)
9 PASSENGER SAFETY NOTICE (N15)
11 SUPPLIES FOR INTEGRAL LIGHTS (N12B)
16 BRAKE PRESSURE (N39)
17 No2 FUEL COMPUTER DIGITAL (N63B)
20 ANGLE OF ATTACK (N81A) (WHEN FITTED)
21 LANDING GEAR INDICATION (N16A SH.2)
ART ID # HA00F890807AA
25-8NA5-316A SH 1
DWG ISS - 10

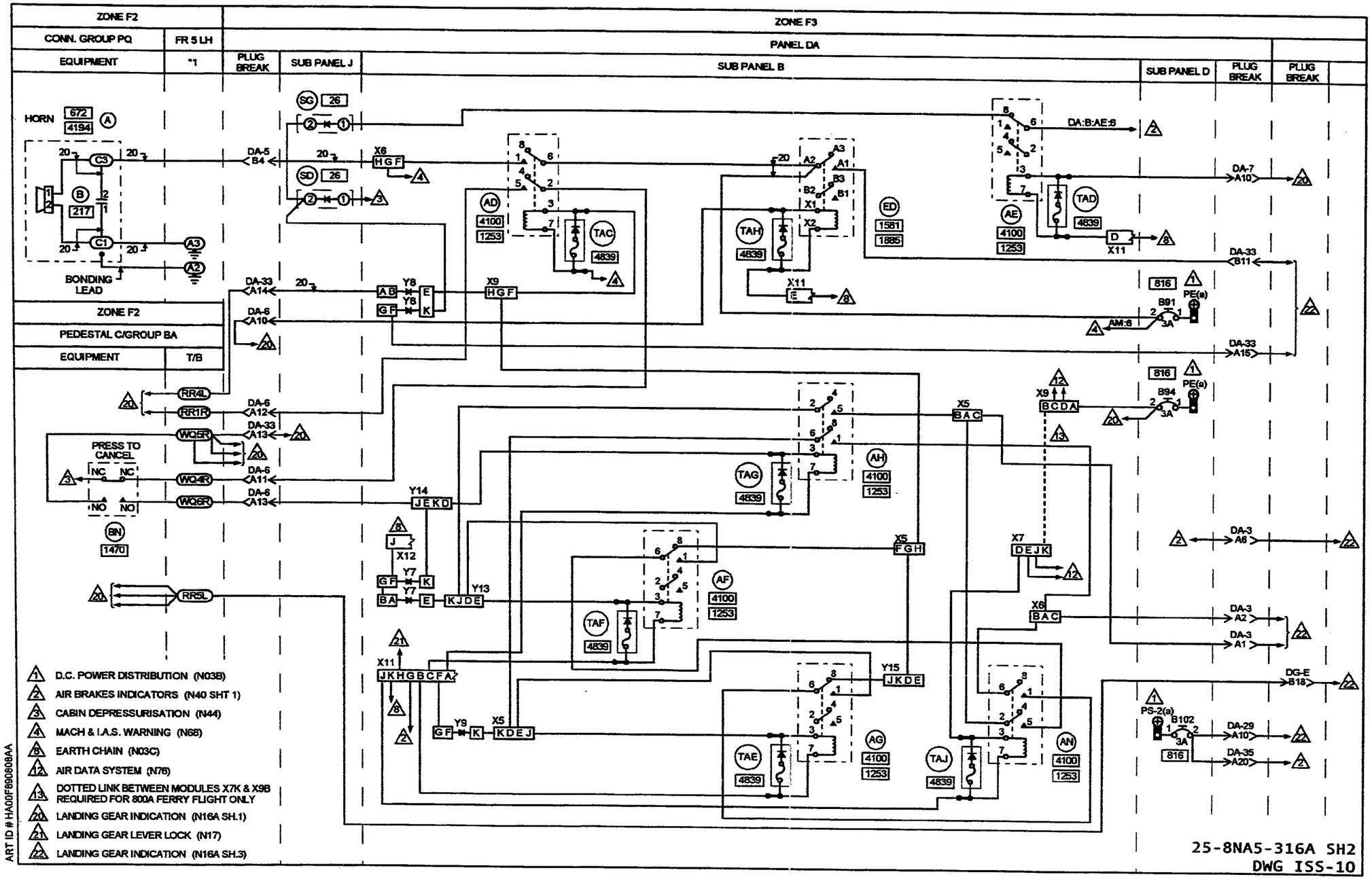
ZONE F2
CONN. GROUP PQ
FR 5 LH
EQUIPMENT
"1
ZONE F3
PANEL DA
PLUG BREAK
SUB PANEL J
SUB PANEL B
SUB PANEL D
PLUG BREAK
PLUG BREAK
HORN
672
4194
217
BONDING LEAD
ZONE F2
PEDESTAL C/GROUP BA
EQUIPMENT
T/B
PRESS TO CANCEL
NC
NO
1470
DA-5 B4
DA-33 A14
DA-6 A10
DA-6 A12
DA-33 A13
DA-6 A11
DA-6 A13
DA:B:AE:6
DA-7 A10
DA-33 B11
DA-33 A15
AM:6
DA-3 A6
DA-3 A2
DA-3 A1
DG-E B18
DA-29 A10
DA-35 A20
816
B91
B94
B102
PE(a)
PS-2(a)
3A
4100
1253
4839
1581
1885
D.C. POWER DISTRIBUTION (N03B)
AIR BRAKES INDICATORS (N40 SHT 1)
CABIN DEPRESSURISATION (N44)
MACH & I.A.S. WARNING (N68)
EARTH CHAIN (N03C)
AIR DATA SYSTEM (N76)
DOTTED LINK BETWEEN MODULES X7K & X9B REQUIRED FOR 800A FERRY FLIGHT ONLY
LANDING GEAR INDICATION (N16A SH.1)
LANDING GEAR LEVER LOCK (N17)
LANDING GEAR INDICATION (N16A SH.3)
ART ID # HA00F690808AA
25-8NA5-316A SH2
DWG ISS-10

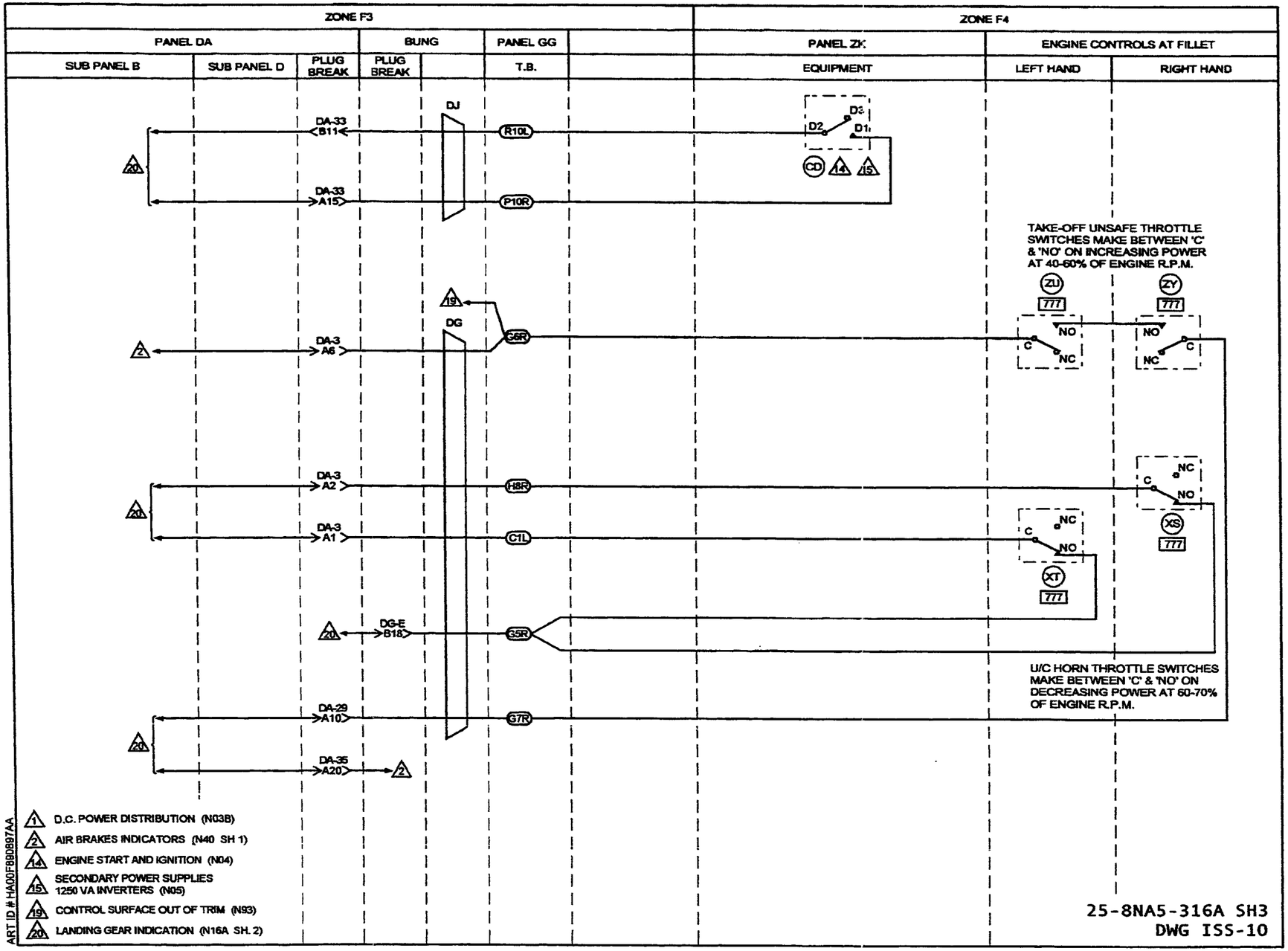
ZONE F3
ZONE F4
PANEL DA
BUNG
PANEL GG
PANEL ZK
ENGINE CONTROLS AT FILLET
SUB PANEL B
SUB PANEL D
PLUG BREAK
PLUG BREAK
T.B.
EQUIPMENT
LEFT HAND
RIGHT HAND
DJ
DA-33 B11
R10L
D3
D2
D1
CD
14
15
20
DA-33 A15
P10R
TAKE-OFF UNSAFE THROTTLE SWITCHES MAKE BETWEEN 'C' & 'NO' ON INCREASING POWER AT 40-60% OF ENGINE R.P.M.
ZU
ZY
777
19
DG
DA-3 A6
G6R
NO
C
NC
2
DA-3 A2
H8R
DA-3 A1
C1L
XS
XT
DG-E B18
G5R
U/C HORN THROTTLE SWITCHES MAKE BETWEEN 'C' & 'NO' ON DECREASING POWER AT 60-70% OF ENGINE R.P.M.
DA-29 A10
G7R
DA-35 A20
1 D.C. POWER DISTRIBUTION (N03B)
2 AIR BRAKES INDICATORS (N40 SH 1)
14 ENGINE START AND IGNITION (N04)
15 SECONDARY POWER SUPPLIES 1250 VA INVERTERS (N05)
19 CONTROL SURFACE OUT OF TRIM (N93)
20 LANDING GEAR INDICATION (N16A SH. 2)
ART ID # HA00F980897AA
25-8NA5-316A SH3
DWG ISS-10

	IDENT	PART NUMBER	1234567 NOMENCLATURE	EFFECT FROM TO	UNITS PER ASSY
			LANDING GEAR INDICATION	091114 116117 119145 147147 149276	
R R R R R		25-8NA5-316A	WIRING DIAGRAM- (MOD 253149C) (MOD 25F505A) (PRE MOD 259654B) (PRE MOD 25F968A)		RF
	A-JA	HWBUN1146D10B	.TERMINAL BLOCK- (VK0574)		1
	A-PQ	3BA002768-18	.HORN- (VK0533)		1
	AD-DAB	HDS8SF3J03	.RELAY- (VK1793) (USED WITH SOCKET: RSE120074 (V58982))		1
	AE-DAB	HDS8SF3J03	.RELAY- (VK1793) (USED WITH SOCKET: RSE120074 (V58982))		1
	AF-DAB	HDS8SF3J03	.RELAY- (VK1793) (USED WITH SOCKET: RSE120074 (V58982))		1
	AG-DAB	HDS8SF3J03	.RELAY- (VK1793) (USED WITH SOCKET: RSE120074 (V58982))		1
	AH-DAB	HDS8SF3J03	.RELAY- (VK1793) (USED WITH SOCKET: RSE120074 (V58982))		1
	AN-DAB	HDS8SF3J03	.RELAY- (VK1793) (USED WITH SOCKET: RSE120074 (V58982))		1
	AQ	HWBUN1146D10B	.TERMINAL BLOCK- (VK0574)		1
	AX-CC	99-230	.SWITCH- (V32245)		1
	AY-CC	99-230	.SWITCH- (V32245)		1
			MISSING ITEM NO. NOT APPLICABLE		

– ITEM NOT ILLUSTRATED

IDENT	PART NUMBER	1234567 NOMENCLATURE	EFFECT FROM TO	UNITS PER ASSY
AZ-CC	99-230	.SWITCH- (V32245)		1
B-PQ	5910-99-0115572	.CAPACITOR- (VK0064)		1
BN-BA	601-4300	.PUSH BUTTON SWITCH- (V81579)		1
B102-DAD	483TCG11J25-3A	.CIRCUIT BREAKER-3AMP (VU0091)		1
B91-DAD	483TCG11J25-3A	.CIRCUIT BREAKER-3AMP (VU0091)		1
B92-DAD	483TCG11J25-3A	.CIRCUIT BREAKER-3AMP (VU0091)		1
B94-DAD	483TCG11J25-3A	.CIRCUIT BREAKER-3AMP (VU0091)		1
C-GG	HWBUN1146D10B	.TERMINAL BLOCK- (VK0574)		1
C-PQ	HWBUN1146S3B	.TERMINAL BLOCK- (VK0574)		1
CC2-P	BAEREF000004290	.CONNECTOR-PIN (6026-20-41PWCONDB (VK1793)) (USED WITH BACKSHELL: GTR62-20NACS1 (VU0419))		1
CC2-R	BAEREF000004392	.CONNECTOR-SOCKET (6027-20-41SWCONDA (VK1793)) (USED WITH BACKSHELL: GTR62-20NACS1 (VU0419))		1
CD-ZK	M400-1265	.RELAY- (VK6265) (USED WITH SOCKET: M12883-40-19 (V81349))		1
CG6-P	MTC100YH2-009	.SHELL-PLUG (VK1010) (USED WITH WAFERS: TYPE A, MTC100KT2-1101 TYPE B, MTC100KT2-1102)	091114 116117 119145 147147 149254	1
CG6-P	MTC100YH2-009	.SHELL-PLUG (VK1010) (USED WITH INSERTS: PRIMARY MTC100YC1-001 SECONDARY MTC100YC1-002)	255276	1
CG6-R	MTC100YH2-010	.SHELL-RECEPTACLE (VK1010) (USED WITH WAFERS: TYPE A, MTC100KT2-1103 TYPE B, MTC100KT2-1104)	091114 116117 119145 147147 149254	1
		MISSING ITEM NO. NOT APPLICABLE		

– ITEM NOT ILLUSTRATED

IDENT	PART NUMBER	1234567 NOMENCLATURE	EFFECT FROM TO	UNITS PER ASSY
CG6-R	MTC100YH2-010	.SHELL-RECEPTACLE (VK1010) (USED WITH INSERTS: PRIMARY MTC100YC1-003 SECONDARY MTC100YC1-004)	255276	1
CV	422253-15	.BUNG- (VK1793)		1
DA29-P	MTC100YH1-003	.SHELL-PLUG (VK1010) (USED WITH WAFERS: TYPE A, MTC100KT1-1101 TYPE B, MTC100KTI-1102)	091114 116117 119145 147147 149254	1
DA29-P	MTC100YH1-003	.SHELL-PLUG (VK1010) (USED WITH INSERT: MTC100YC1-005)	255276	1
DA29-R	MTC100YH1-004	.SHELL-RECEPTACLE (VK1010) (USED WITH WAFERS: TYPE A, MTC100KT1-1103 TYPE B, MTC100KT1-1104)	091114 116117 119145 147147 149254	1
DA29-R	MTC100YH1-004	.SHELL-RECEPTACLE (VK1010) (USED WITH INSERT: MTC100YC1-006)	255276	1
DA3-P	MTC100YH1-003	.SHELL-PLUG (VK1010) (USED WITH WAFERS: TYPE A, MTC100KT1-1101 TYPE B, MTC100KTI-1102)	091114 116117 119145 147147 149254	1
DA3-P	MTC100YH1-003	.SHELL-PLUG (VK1010) (USED WITH INSERT: MTC100YC1-005)	255276	1
DA3-R	MTC100YH1-004	.SHELL-RECEPTACLE (VK1010) (USED WITH WAFERS: TYPE A, MTC100KT1-1103 TYPE B, MTC100KT1-1104)	091114 116117 119145 147147 149254	1
DA3-R	MTC100YH1-004	.SHELL-RECEPTACLE (VK1010) (USED WITH INSERT: MTC100YC1-006)	255276	1
DA33-P	MTC100YH2-009	.SHELL-PLUG (VK1010) (USED WITH WAFERS: TYPE A, MTC100KT2-1101 TYPE B, MTC100KT2-1102)	091114 116117 119145 147147 149254	1

MISSING ITEM NO. NOT APPLICABLE

– ITEM NOT ILLUSTRATED

IDENT	PART NUMBER	1234567 NOMENCLATURE	EFFECT FROM TO	UNITS PER ASSY
DA33-P	MTC100YH2-009	.SHELL-PLUG (VK1010) (USED WITH INSERTS: PRIMARY MTC100YC1-001 SECONDARY MTC100YC1-002)	255276	1
DA33-R	MTC100YH2-010	.SHELL-RECEPTACLE (VK1010) (USED WITH WAFERS: TYPE A, MTC100KT2-1103 TYPE B, MTC100KT2-1104)	091114 116117 119145 147147 149254	1
DA33-R	MTC100YH2-010	.SHELL-RECEPTACLE (VK1010) (USED WITH INSERTS: PRIMARY MTC100YC1-003 SECONDARY MTC100YC1-004)	255276	1
DA35-P	MTC100YH2-009	.SHELL-PLUG (VK1010) (USED WITH WAFERS: TYPE A, MTC100KT2-1101 TYPE B, MTC100KT2-1102)	091114 116117 119145 147147 149254	1
DA35-P	MTC100YH2-009	.SHELL-PLUG (VK1010) (USED WITH INSERTS: PRIMARY MTC100YC1-001 SECONDARY MTC100YC1-002)	255276	1
DA35-R	MTC100YH2-010	.SHELL-RECEPTACLE (VK1010) (USED WITH WAFERS: TYPE A, MTC100KT2-1103 TYPE B, MTC100KT2-1104)	091114 116117 119145 147147 149254	1
DA35-R	MTC100YH2-010	.SHELL-RECEPTACLE (VK1010) (USED WITH INSERTS: PRIMARY MTC100YC1-003 SECONDARY MTC100YC1-004)	255276	1
DA5-P	MTC100YH2-009	.SHELL-PLUG (VK1010) (USED WITH WAFERS: TYPE A, MTC100KT2-1101 TYPE B, MTC100KT2-1102)	091114 116117 119145 147147 149254	1
DA5-P	MTC100YH2-009	.SHELL-PLUG (VK1010) (USED WITH INSERTS: PRIMARY MTC100YC1-001 SECONDARY MTC100YC1-002)	255276	1
DA5-R	MTC100YH2-010	.SHELL-RECEPTACLE (VK1010) (USED WITH WAFERS: TYPE A, MTC100KT2-1103 TYPE B, MTC100KT2-1104)	091114 116117 119145 147147 149254	1

MISSING ITEM NO. NOT APPLICABLE

– ITEM NOT ILLUSTRATED

IDENT	PART NUMBER	1234567 NOMENCLATURE	EFFECT FROM TO	UNITS PER ASSY
DA5-R	MTC100YH2-010	.SHELL-RECEPTACLE (VK1010) (USED WITH INSERTS: PRIMARY MTC100YC1-003 SECONDARY MTC100YC1-004)	255276	1
DA6-P	MTC100YH2-009	.SHELL-PLUG (VK1010) (USED WITH WAFERS: TYPE A, MTC100KT2-1101 TYPE B, MTC100KT2-1102)	091114 116117 119145 147147 149254	1
DA6-P	MTC100YH2-009	.SHELL-PLUG (VK1010) (USED WITH INSERTS: PRIMARY MTC100YC1-001 SECONDARY MTC100YC1-002)	255276	1
DA6-R	MTC100YH2-010	.SHELL-RECEPTACLE (VK1010) (USED WITH WAFERS: TYPE A, MTC100KT2-1103 TYPE B, MTC100KT2-1104)	091114 116117 119145 147147 149254	1
DA6-R	MTC100YH2-010	.SHELL-RECEPTACLE (VK1010) (USED WITH INSERTS: PRIMARY MTC100YC1-003 SECONDARY MTC100YC1-004)	255276	1
DA7-P	MTC100YH1-003	.SHELL-PLUG (VK1010) (USED WITH WAFERS: TYPE A, MTC100KT1-1101 TYPE B, MTC100KTI-1102)	091114 116117 119145 147147 149254	1
DA7-P	MTC100YH1-003	.SHELL-PLUG (VK1010) (USED WITH INSERT: MTC100YC1-005)	255276	1
DA7-R	MTC100YH1-004	.SHELL-RECEPTACLE (VK1010) (USED WITH WAFERS: TYPE A, MTC100KT1-1103 TYPE B, MTC100KT1-1104)	091114 116117 119145 147147 149254	1
DA7-R	MTC100YH1-004	.SHELL-RECEPTACLE (VK1010) (USED WITH INSERT: MTC100YC1-006)	255276	1
DC	422254-8	.BUNG- (VK1793)		1
DG	422255-8	.BUNG- (VK1793)		1
		MISSING ITEM NO. NOT APPLICABLE		

– ITEM NOT ILLUSTRATED

IDENT	PART NUMBER	1234567 NOMENCLATURE	EFFECT FROM TO	UNITS PER ASSY
DGE-P	MTC100YH2-009	.SHELL-PLUG (VK1010) (USED WITH WAFERS: TYPE A, MTC100KT2-1103 TYPE B, MTC100KT2-1104)	091114 116117 119145 147147 149254	1
DGE-P	MTC100YH2-009	.SHELL-PLUG (VK1010) (USED WITH INSERTS: PRIMARY MTC100YC1-003 SECONDARY MTC100YC1-004)	255276	1
DGE-R	MTC100YH2-010	.SHELL-RECEPTACLE (VK1010) (USED WITH WAFERS: TYPE A, MTC100KT2-1101 TYPE B, MTC100KT2-1102)	091114 116117 119145 147147 149254	1
DGE-R	MTC100YH2-010	.SHELL-RECEPTACLE (VK1010) (USED WITH INSERTS: PRIMARY MTC100YC1-001 SECONDARY MTC100YC1-002)	255276	1
DJ	422255-7	.BUNG- (VK1793)		1
ED-DAB	M300-1264	.RELAY- (VK6265) (USED WITH SOCKET: M12883-41-16 (V81349))		1
G-GG	HWBUN1146D10B	.TERMINAL BLOCK- (VK0574)		1
GA-CC	BYW54	.DIODE- (VK0004)		1
GB-CC	BYW54	.DIODE- (VK0004)		1
GC-CC	BYW54	.DIODE- (VK0004)		1
GD-CC	BYW54	.DIODE- (VK0004)		1
GE-CC	BYW54	.DIODE- (VK0004)		1
GF-CC	BYW54	.DIODE- (VK0004)		1
GG-CC	BYW54	.DIODE- (VK0004)		1
GJ-CC	BYW54	.DIODE- (VK0004)		1
H-GG	HWBUN1146D10B	.TERMINAL BLOCK- (VK0574)		1
JK	72544-030-0AV2	.TERMINAL BLOCK- (VK0574)		1
		MISSING ITEM NO. NOT APPLICABLE		

– ITEM NOT ILLUSTRATED

IDENT	PART NUMBER	1234567 NOMENCLATURE	EFFECT FROM TO	UNITS PER ASSY
JM	9006EN3	.MICRO SWITCH- (V91929) (OPT (VK6596)) (PRE SB32-241)	091114 116117 119145 147147 149225 228276	1
JM	9006EN42	.MICRO SWITCH- (V91929) (OPT (VK6596))	226227	1
JM	9006EN42	.MICRO SWITCH- (V91929) (OPT (VK6596)) (POST SB32-241)	091114 116117 119145 147147 149225 228276	1
JN	1EN1-8N119	.MICRO SWITCH- (V91929) (OPT (VK6596))		1
KK	72544-030-0AV2	.TERMINAL BLOCK- (VK0574)		1
KM	9006EN3	.MICRO SWITCH- (V91929) (OPT (VK6596)) (PRE SB32-241)	091114 116117 119145 147147 149225 228276	1
KM	9006EN42	.MICRO SWITCH- (V91929) (OPT (VK6596))	226227	1
KM	9006EN42	.MICRO SWITCH- (V91929) (OPT (VK6596)) (POST SB32-241)	091114 116117 119145 147147 149225 228276	1
KN	1EN1-8N119	.MICRO SWITCH- (V91929) (OPT (VK6596))		1
NA	1EN1-15BN111	.MICRO SWITCH-LEG LOCK (V91929) (OPT (VK6596))		1
NB	9005EN17	.MICRO SWITCH-STRUT LOCK (V91929) (OPT (VK6596))		1
NC	1EN1-14N119	.MICRO SWITCH-CHANGEOVER (V91929) (OPT (VK6596))		1
ND-P	BAEREF000004490	.CONNECTOR-PIN (6026-8-33PFCONDD (VK1793))		1
		MISSING ITEM NO. NOT APPLICABLE		

– ITEM NOT ILLUSTRATED

IDENT	PART NUMBER	1234567 NOMENCLATURE	EFFECT FROM TO	UNITS PER ASSY
ND-R	BAEREF000003294	.CONNECTOR-SOCKET (6020-8-33SFCONDD (VK1793))		1
P-GG	HWBUN1146D10B	.TERMINAL BLOCK- (VK0574)		1
PQ	HWBUN1146D10B	.TERMINAL BLOCK- (VK0574)		1
PS	2HM19-1	.MICRO SWITCH- (V91929) (OPT (VK6596))		1
PT	HWBUN1146S3B	.TERMINAL BLOCK- (VK0574)		1
P1-JA-P	BAEREF000003898	.CONNECTOR-PIN (6026-24-61PWCONDD (VK1793))		1
P1-JA-R	BAEREF000004313	.CONNECTOR- (6027-24-61SWCONDD (VK1793))		1
P2-JA-P	BAEREF000004077	.CONNECTOR-PIN (6026-22-41PNCONDD (VK1793))		1
P2-JA-R	BAEREF000004313	.CONNECTOR- (6027-24-61SWCONDD (VK1793))		1
R-GG	HWBUN1146D10B	.TERMINAL BLOCK- (VK0574)		1
RQ-BA	1HSN64	.MICRO SWITCH-FLAP (V91929) (OPT (VK6596))		1
RR-BA	HWBUN1146D10B	.TERMINAL BLOCK- (VK0574)		1
SD-DAJ	CV7313	.DIODE- (VK0004)		1
SG-DAJ	CV7313	.DIODE- (VK0004)		1
WQ-BA	HWBUN1736D10B	.TERMINAL BLOCK- (VK0574)		1
XS	1HSN64	.MICRO SWITCH- (V91929) (OPT (VK6596))		1
XT	1HSN64	.MICRO SWITCH- (V91929) (OPT (VK6596))		1
R X11-DAB	M81714-2DA1	.JUNCTION BLOCK- (V81349)		1
R X12-DAB	M81714-2DA1	.JUNCTION BLOCK- (V81349)		1
X5-DAB	MRTB20E57-111	.TERMINAL JUNCTION MODULE- (V14283)		1
		MISSING ITEM NO. NOT APPLICABLE		

– ITEM NOT ILLUSTRATED

	IDENT	PART NUMBER	1234567 NOMENCLATURE	EFFECT FROM TO	UNITS PER ASSY
	X6-DAB	MRTB20E57-111	.TERMINAL JUNCTION MODULE- (V14283)		1
	X7-DAB	MRTB20E57-111	.TERMINAL JUNCTION MODULE- (V14283)		1
R R	X9-DAB	M81714-2DB1	.JUNCTION BLOCK- (V81349)		1
	Y-CC	HWBUN1736D10B	.TERMINAL BLOCK- (VK0574)		1
	Y13-DAB	MRTB20E57-111	.TERMINAL JUNCTION MODULE- (V14283)		1
	Y14-DAB	MRTB20E57-111	.TERMINAL JUNCTION MODULE- (V14283)		1
	Y15-DAB	MRTB20E57-111	.TERMINAL JUNCTION MODULE- (V14283)		1
	Y7-DAB	MRTB20E03-784	.TERMINAL JUNCTION MODULE- (V14283)		1
R R	Y8-DAB	591818-1	.MODULE- (V00779)		1
	Y9-DAB	MRTB20E03-784	.TERMINAL JUNCTION MODULE- (V14283)		1
	ZU	1HSN64	.MICRO SWITCH- (V91929) (OPT (VK6596))		1
	ZY	1HSN64	.MICRO SWITCH- (V91929) (OPT (VK6596))		1
			MISSING ITEM NO. NOT APPLICABLE		

– ITEM NOT ILLUSTRATED

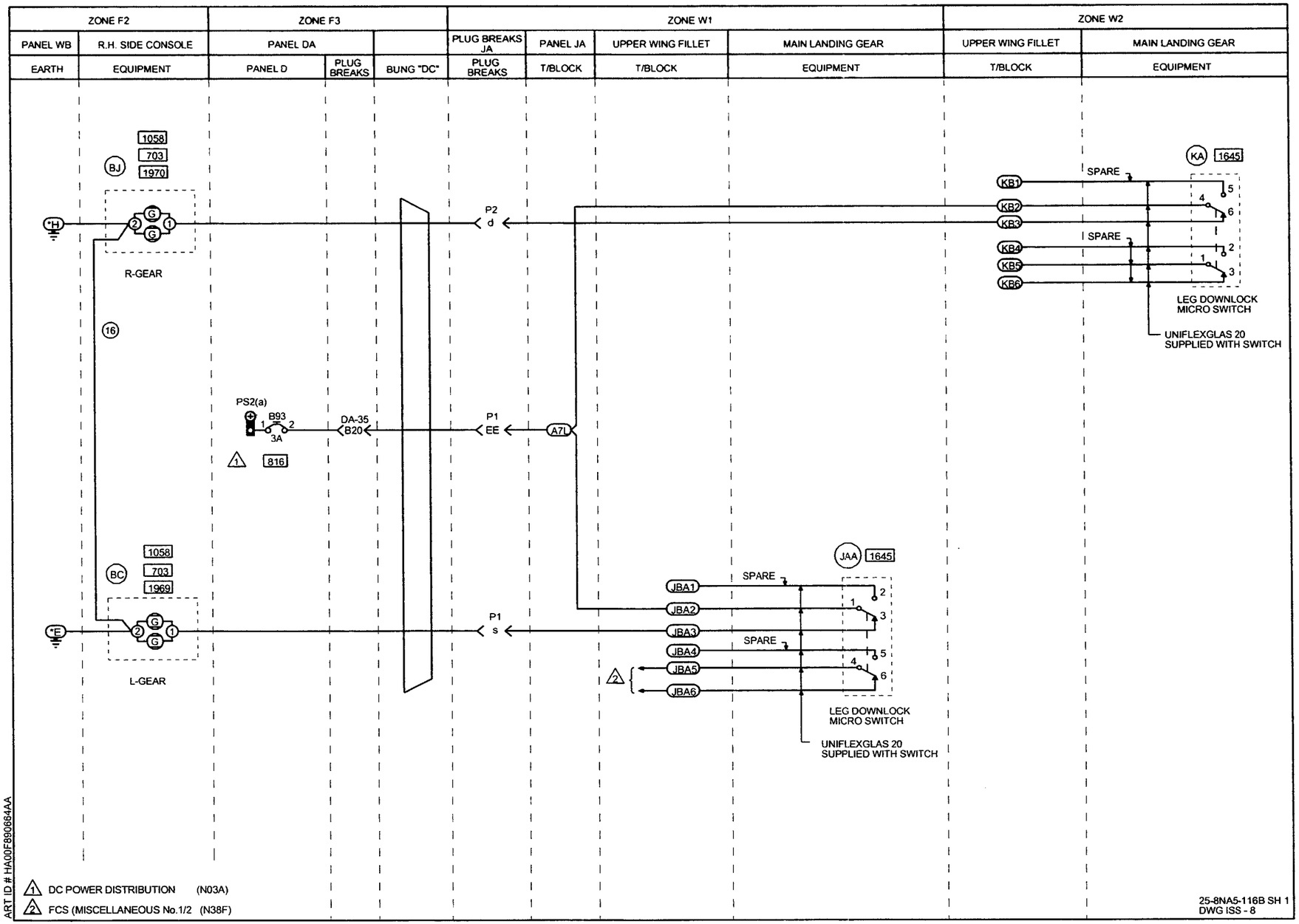
ZONE F2
ZONE F3
ZONE W1
ZONE W2
PANEL WB
R.H. SIDE CONSOLE
PANEL DA
PLUG BREAKS JA
PANEL JA
UPPER WING FILLET
MAIN LANDING GEAR
UPPER WING FILLET
MAIN LANDING GEAR
EARTH
EQUIPMENT
PANEL D
PLUG BREAKS
BUNG "DC"
PLUG BREAKS
T/BLOCK
T/BLOCK
EQUIPMENT
T/BLOCK
EQUIPMENT
1058
703
1970
BJ
*H
R-GEAR
16
P2
d
KA
1645
KB1
KB2
KB3
KB4
KB5
KB6
SPARE
SPARE
LEG DOWNLOCK MICRO SWITCH
UNIFLEXGLAS 20 SUPPLIED WITH SWITCH
PS2(a)
B93
3A
DA-35
B20
P1
EE
A7L
816
1058
703
1969
BC
*E
L-GEAR
P1
s
JAA
1645
JBA1
JBA2
JBA3
JBA4
JBA5
JBA6
SPARE
SPARE
LEG DOWNLOCK MICRO SWITCH
UNIFLEXGLAS 20 SUPPLIED WITH SWITCH
1 DC POWER DISTRIBUTION (N03A)
2 FCS (MISCELLANEOUS No.1/2 (N38F)
ART ID # HA00F890664AA
25-8NA5-116B SH 1
DWG ISS - 8

IDENT	PART NUMBER	1234567 NOMENCLATURE	EFFECT FROM TO	UNITS PER ASSY
		LANDING GEAR STANDBY INDICATION	091276	
	25-8NA5-116B	WIRING DIAGRAM- (MOD 253149C) (MOD 25F505A)		RF
A-JA	HWBUN1146D10B	.TERMINAL BLOCK- (VK0574)		1
BC	C9032-001	.LAMP- (VK0673)		1
BJ	C9032-001	.LAMP- (VK0673)		1
B93-DAD	483TCG11J25-3A	.CIRCUIT BREAKER-3AMP (VU0091)		1
DA35-P	MTC100YH2-009	.SHELL-PLUG (VK1010) (USED WITH WAFERS: TYPE A,MTC100KT2-1101 TYPE B,MTC100KT2-1102)	091254	1
DA35-P	MTC100YH2-009	.SHELL-PLUG (VK1010) (USED WITH INSERTS: PRIMARY MTC100YC1-001 SECONDARY MTC100YC1-002)	255276	1
DA35-R	MTC100YH2-010	.SHELL-RECEPTACLE (VK1010) (USED WITH WAFERS: TYPE A,MTC100KT2-1103 TYPE B,MTC100KT2-1104)	091254	1
DA35-R	MTC100YH2-010	.SHELL-RECEPTACLE (VK1010) (USED WITH INSERTS: PRIMARY MTC100YC1-003 SECONDARY MTC100YC1-004)	255276	1
DC	422254-8	.BUNG- (VK1793)		1
JAA	9006EN3	.MICRO SWITCH- (V91929) (OPT (VK6596)) (PRE SB32-241)		1
JAA	9006EN43	.MICRO SWITCH- (V91929) (OPT (VK6596)) (POST SB32-241)		1
JBA	72541-030-0AV2	.TERMINAL BLOCK- (VK0574)		1
KA	9006EN3	.MICRO SWITCH- (V91929) (OPT (VK6596)) (PRE SB32-241)		1
		MISSING ITEM NO. NOT APPLICABLE		

– ITEM NOT ILLUSTRATED

IDENT	PART NUMBER	1234567 NOMENCLATURE	EFFECT FROM TO	UNITS PER ASSY
KA	9006EN43	.MICRO SWITCH- (V91929) (OPT (VK6596)) (POST SB32-241)		1
KB	72541-030-0AV2	.TERMINAL BLOCK- (VK0574)		1
P1-JA-P	BAEREF000003898	.CONNECTOR-PIN (6026-24-61PWCONDD (VK1793))		1
P1-JA-R	BAEREF000004313	.CONNECTOR-SOCKET (6027-24-61SWCONDD (VK1793))		1
P2-JA-P	BAEREF000004077	.CONNECTOR-PIN (6026-22-41PNCONDD (VK1793))		1
P2-JA-R	BAEREF000004329	.CONNECTOR-SOCKET (6027-22-41SNCONDD (VK1793))		1
		MISSING ITEM NO. NOT APPLICABLE		

– ITEM NOT ILLUSTRATED

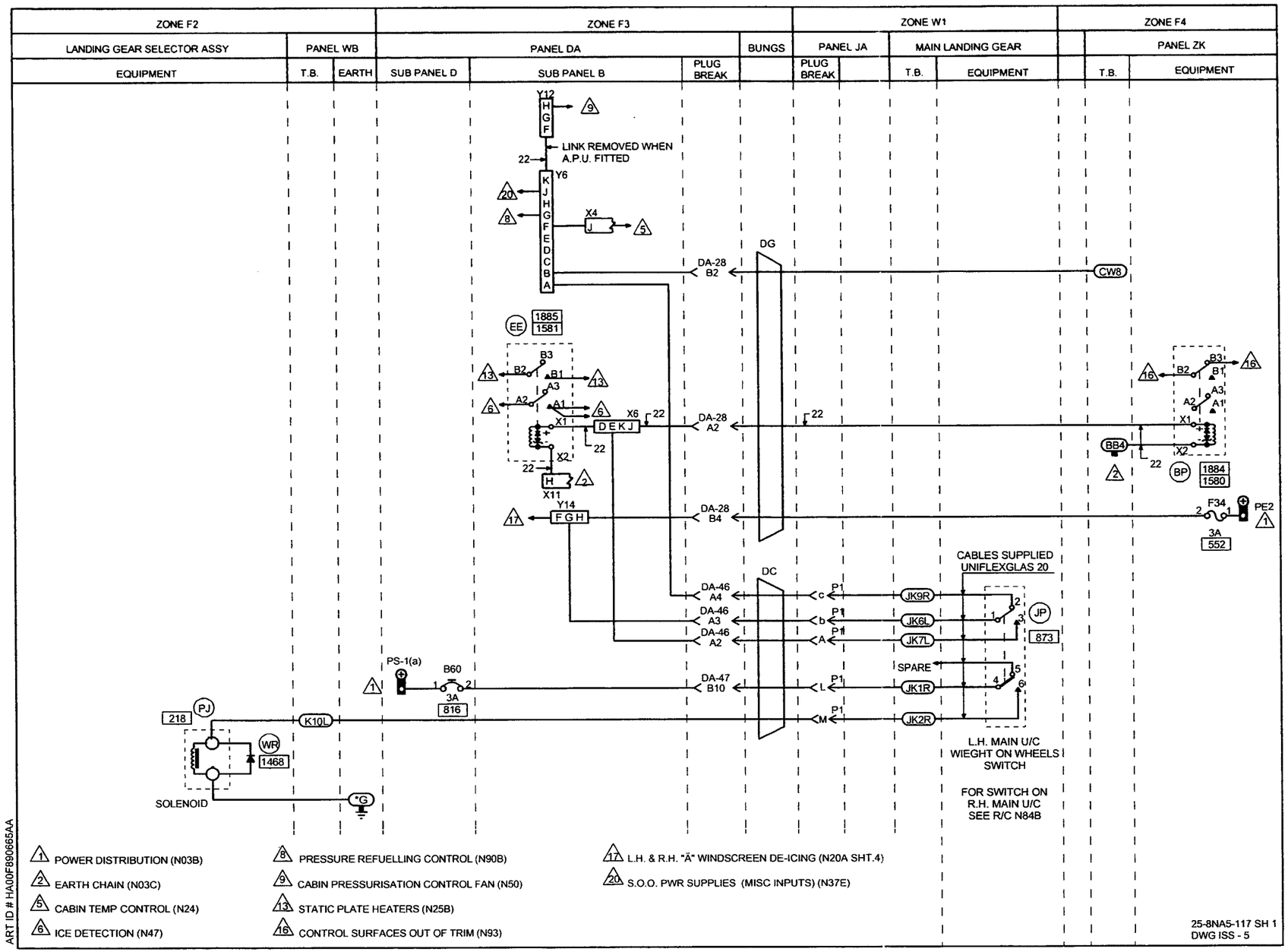
ZONE F2
ZONE F3
ZONE W1
ZONE F4
LANDING GEAR SELECTOR ASSY
PANEL WB
PANEL DA
BUNGS
PANEL JA
MAIN LANDING GEAR
PANEL ZK
EQUIPMENT
T.B.
EARTH
SUB PANEL D
SUB PANEL B
PLUG BREAK
PLUG BREAK
T.B.
EQUIPMENT
T.B.
EQUIPMENT
LINK REMOVED WHEN A.P.U. FITTED
DG
DC
DA-28 B2
DA-28 A2
DA-28 B4
DA-46 A4
DA-46 A3
DA-46 A2
DA-47 B10
CW8
BB4
BP
1884
1580
F34
3A
552
PE2
CABLES SUPPLIED UNIFLEXGLAS 20
JK9R
JK6L
JK7L
JK1R
JK2R
JP
873
SPARE
L.H. MAIN U/C WIEGHT ON WHEELS SWITCH
FOR SWITCH ON R.H. MAIN U/C SEE R/C N84B
PS-1(a)
B60
3A
816
K10L
PJ
218
WR
1468
SOLENOID
EE
1885
1581
POWER DISTRIBUTION (N03B)
EARTH CHAIN (N03C)
CABIN TEMP CONTROL (N24)
ICE DETECTION (N47)
PRESSURE REFUELLING CONTROL (N90B)
CABIN PRESSURISATION CONTROL FAN (N50)
STATIC PLATE HEATERS (N25B)
CONTROL SURFACES OUT OF TRIM (N93)
L.H. & R.H. "Ä" WINDSCREEN DE-ICING (N20A SHT.4)
S.O.O. PWR SUPPLIES (MISC INPUTS) (N37E)
25-8NA5-117 SH 1
DWG ISS - 5
ART ID # HA00F890665AA

IDENT	PART NUMBER	1234567 NOMENCLATURE	EFFECT FROM TO	UNITS PER ASSY
		LANDING GEAR LEVER LOCK	091093 095096 098101	
	25-8NA5-117	WIRING DIAGRAM- (MOD 253149C)		RF
BB-ZK	HWBUN1146S10B	.TERMINAL BLOCK- (VK0574)		1
BP-ZK	M300-1264	.RELAY- (VK6265) (USED WITH SOCKET: M12883-41-16 (V81349))		1
B60-DAD	483TCG11J25-3A	.CIRCUIT BREAKER-3AMP (VU0091)		1
CW-ZK	HWBUN1146S10B	.TERMINAL BLOCK- (VK0574)		1
DA28-P	MTC100YH1-003	.SHELL-PLUG (VK1010) (USED WITH WAFERS: TYPE A, MTC100KT1-1101 TYPE B, MTC100KT1-1102)		1
DA28-R	MTC100YH1-004	.SHELL-RECEPTACLE (VK1010) (USED WITH WAFERS: TYPE A, MTC100KT1-1103 TYPE B, MTC100KT1-1104)		1
DA46-P	MTC100YH1-003	.SHELL-PLUG (VK1010) (USED WITH WAFERS: TYPE A, MTC100KT1-1101 TYPE B, MTC100KT1-1102)		1
DA46-R	MTC100YH1-004	.SHELL-RECEPTACLE (VK1010) (USED WITH WAFERS: TYPE A, MTC100KT1-1103 TYPE B, MTC100KT1-1104)		1
DA47-P	MTC100YH1-003	.SHELL-PLUG (VK1010) (USED WITH WAFERS: TYPE A, MTC100KT1-1101 TYPE B, MTC100KT1-1102)		1
DA47-R	MTC100YH1-004	.SHELL-RECEPTACLE (VK1010) (USED WITH WAFERS: TYPE A, MTC100KT1-1103 TYPE B, MTC100KT1-1104)		1
DC	422254-8	.BUNG- (VK1793)		1
DG	422255-8	.BUNG- (VK1793)		1
		MISSING ITEM NO. NOT APPLICABLE		

– ITEM NOT ILLUSTRATED

IDENT	PART NUMBER	1234567 NOMENCLATURE	EFFECT FROM TO	UNITS PER ASSY
EE-DAB	M300-1264	.RELAY- (VK6265) (USED WITH SOCKET: M12883-41-16 (V81349))		1
F34-ZK	5920-99-0120075	.FUSE-3AMP (VK0657)		1
JK	72544-030-0AV2	.TERMINAL BLOCK- (VK0574)		1
JP	25-8NW87A	.MICROSWITCH ASSY- (COMPRISING OF: SWITCH 1EN1-14N119 (V91929) (OPT (VK6596)))		1
K-WB	72444-030-0AV2	.TERMINAL BLOCK- (VK0574)		1
PJ	D5327	.SOLENOID- (VK0023)		1
P1-JA-P	BAEREF000003898	.CONNECTOR-PIN (6026-24-61PWCONDD (VK1793))		1
P1-JA-R	BAEREF000004328	.CONNECTOR-SOCKET (6027-24-61SWCONDD (VK1793))		1
WR	25-6NF1387A	.DIODE ASSY- (COMPRISING OF: DIODE BYX36-600 (VK0004))		1
X11-DAB	MRTB20E04-111	.TERMINAL JUNCTION MODULE- (V14283)		1
X4-DAB	MRTB20E57-111	.TERMINAL JUNCTION MODULE- (V14283)		1
X6-DAB	MRTB20E57-111	.TERMINAL JUNCTION MODULE- (V14283)		1
Y12-DAB	MRTB20E57-111	.TERMINAL JUNCTION MODULE- (V14283)		1
Y14-DAB	MRTB20E57-111	.TERMINAL JUNCTION MODULE- (V14283)		1
Y6-DAB	MRTB20E04-111	.TERMINAL JUNCTION MODULE- (V14283)		1
		MISSING ITEM NO. NOT APPLICABLE		

- ITEM NOT ILLUSTRATED

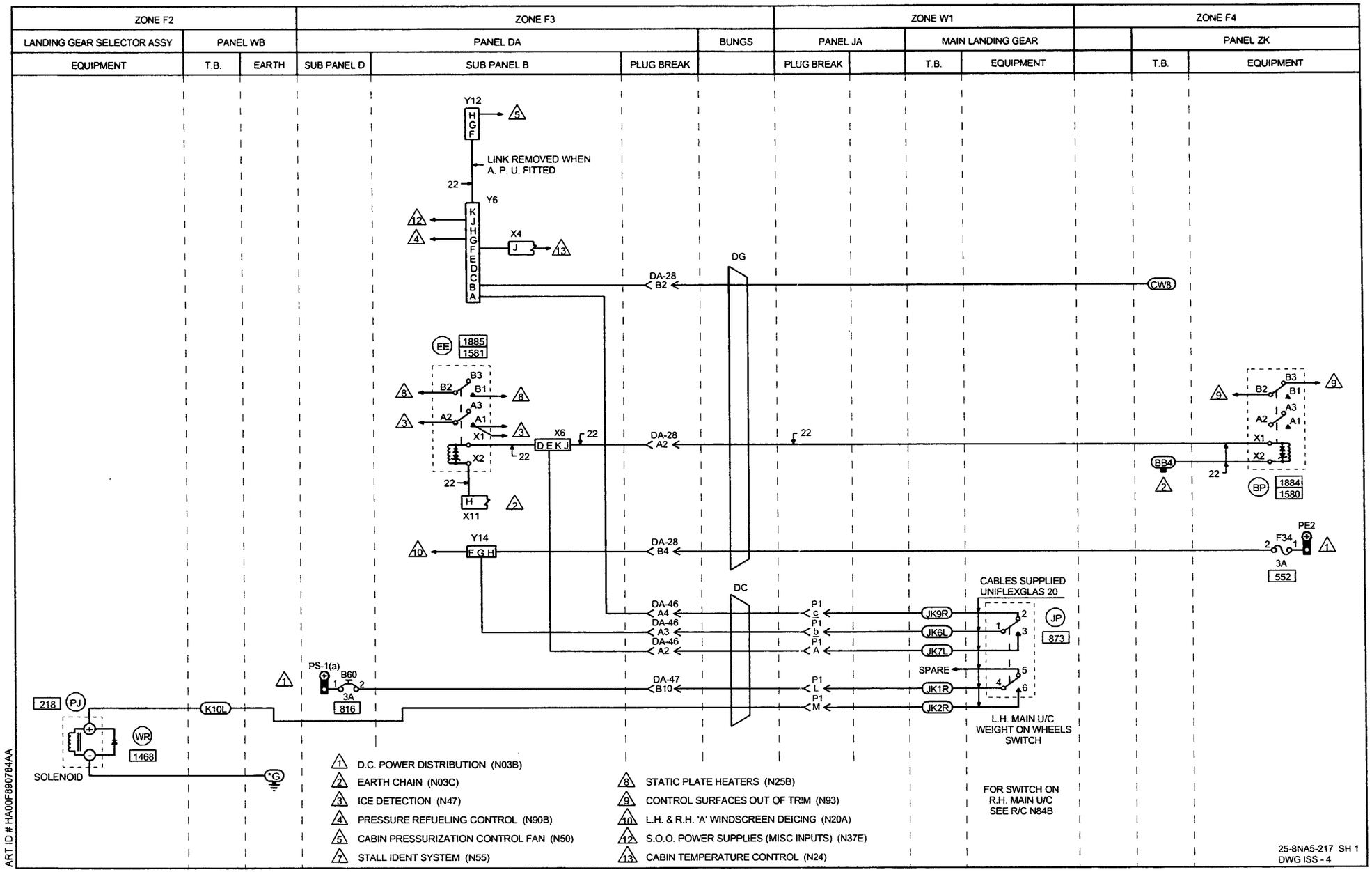
ZONE F2
ZONE F3
ZONE W1
ZONE F4
LANDING GEAR SELECTOR ASSY
PANEL WB
PANEL DA
BUNGS
PANEL JA
MAIN LANDING GEAR
PANEL ZK
EQUIPMENT
T.B.
EARTH
SUB PANEL D
SUB PANEL B
PLUG BREAK
PLUG BREAK
T.B.
EQUIPMENT
T.B.
EQUIPMENT
Y12
LINK REMOVED WHEN A. P. U. FITTED
Y6
X4
DG
DA-28 B2
CW8
EE
1885
1581
X6
DA-28 A2
BB4
BP
1884
1580
X11
Y14
DA-28 B4
PE2
F34
3A
552
CABLES SUPPLIED UNIFLEXGLAS 20
JP
873
DC
DA-46 A4
DA-46 A3
DA-46 A2
DA-47 B10
JK9R
JK6L
JK7L
JK1R
JK2R
SPARE
L.H. MAIN U/C WEIGHT ON WHEELS SWITCH
PS-1(a)
B60
3A
816
218
PJ
K10L
WR
1468
SOLENOID
FOR SWITCH ON R.H. MAIN U/C SEE R/C N84B
1 D.C. POWER DISTRIBUTION (N03B)
2 EARTH CHAIN (N03C)
3 ICE DETECTION (N47)
4 PRESSURE REFUELING CONTROL (N90B)
5 CABIN PRESSURIZATION CONTROL FAN (N50)
7 STALL IDENT SYSTEM (N55)
8 STATIC PLATE HEATERS (N25B)
9 CONTROL SURFACES OUT OF TRIM (N93)
10 L.H. & R.H. 'A' WINDSCREEN DEICING (N20A)
12 S.O.O. POWER SUPPLIES (MISC INPUTS) (N37E)
13 CABIN TEMPERATURE CONTROL (N24)
ART ID # HA00F890784AA
25-8NA5-217 SH 1
DWG ISS - 4

IDENT	PART NUMBER	1234567 NOMENCLATURE	EFFECT FROM TO	UNITS PER ASSY
		LANDING GEAR LEVER LOCK	094094 097097 102276	
	25-8NA5-217	WIRING DIAGRAM- (MOD 253201B) (MOD 25F505A)		RF
BB-ZK	HWBUN1146S10B	.TERMINAL BLOCK- (VK0574)		1
BP-ZK	M300-1264	.RELAY- (VK6265) (USED WITH SOCKET: M12883-41-16 (V81349))		1
B60-DAD	483TCG11J25-3A	.CIRCUIT BREAKER-3AMP (VU0091)		1
CW-ZK	HWBUN1146S10B	.TERMINAL BLOCK- (VK0574)		1
DA28-P	MTC100YH1-003	.SHELL-PLUG (VK1010) (USED WITH WAFERS: TYPE A, MTC100KT1-1101 TYPE B, MTC100KT1-1102)	094094 097097 102254	1
DA28-P	MTC100YH1-003	.SHELL-PLUG (VK1010) (USED WITH INSERT: MTC100YC1-005)	255276	1
DA28-R	MTC100YH1-004	.SHELL-RECEPTACLE (VK1010) (USED WITH WAFERS: TYPE A, MTC100KT1-1103 TYPE B, MTC100KT1-1104)	094094 097097 102254	1
DA28-R	MTC100YH1-004	.SHELL-RECEPTACLE (VK1010) (USED WITH INSERT: MTC100YC1-006)	255276	1
DA46-P	MTC100YH1-003	.SHELL-PLUG (VK1010) (USED WITH WAFERS: TYPE A, MTC100KT1-1101 TYPE B, MTC100KT1-1102)	094094 097097 102254	1
DA46-P	MTC100YH1-003	.SHELL-PLUG (VK1010) (USED WITH INSERT: MTC100YC1-005)	255276	1
DA46-R	MTC100YH1-004	.SHELL-RECEPTACLE (VK1010) (USED WITH WAFERS: TYPE A, MTC100KT1-1103 TYPE B, MTC100KT1-1104)	094094 097097 102254	1

MISSING ITEM NO. NOT APPLICABLE

– ITEM NOT ILLUSTRATED

IDENT	PART NUMBER	1234567 NOMENCLATURE	EFFECT FROM TO	UNITS PER ASSY
DA46-R	MTC100YH1-004	.SHELL-RECEPTACLE (VK1010) (USED WITH INSERT: MTC100YC1-006)	255276	1
DA47-P	MTC100YH1-003	.SHELL-PLUG (VK1010) (USED WITH WAFERS: TYPE A, MTC100KT1-1101 TYPE B, MTC100KT1-1102)	094094 097097 102254	1
DA47-P	MTC100YH1-003	.SHELL-PLUG (VK1010) (USED WITH INSERT: MTC100YC1-005)	255276	1
DA47-R	MTC100YH1-004	.SHELL-RECEPTACLE (VK1010) (USED WITH WAFERS: TYPE A, MTC100KT1-1103 TYPE B, MTC100KT1-1104)	094094 097097 102254	1
DA47-R	MTC100YH1-004	.SHELL-RECEPTACLE (VK1010) (USED WITH INSERT: MTC100YC1-006)	255276	1
DC	422254-8	.BUNG- (VK1793)		1
DG	422255-8	.BUNG- (VK1793)		1
EE-DAB	M300-1264	.RELAY- (VK6265) (USED WITH SOCKET M12883-41-16 (V81349))		1
F34-ZK	5920-99-0120075	.FUSE-3AMP (VK0657)		1
JK	72544-030-0AV2	.TERMINAL BLOCK- (VK0574)		1
JP	25-8NW87A	.MICROSWITCH ASSY- (COMPRISING OF: MICROSWITCH 1EN1-14N119 (V91929) (OPT (VK6596))		1
K-WB	72444-030-0AV2	.TERMINAL BLOCK- (VK0574)		1
PJ	D5327	.SOLENOID- (VK0023)		1
P1-JA-P	BAEREF000003898	.CONNECTOR-PIN (6026-24-61PWCONDD (VK1793))		1
P1-JA-R	BAEREF000004328	.CONNECTOR-SOCKET (6027-24-61SWCONDD (VK1793))		1
		MISSING ITEM NO. NOT APPLICABLE		

- ITEM NOT ILLUSTRATED

IDENT	PART NUMBER	1234567 NOMENCLATURE	EFFECT FROM TO	UNITS PER ASSY
WR	25-6NF1387A	.DIODE ASSY- (COMPRISING OF: DIODE BYX36-600 (VK0004))		1
X11-DAB	MRTB20E04-111	.TERMINAL JUNCTION MODULE- (V14283)		1
X4-DAB	MRTB20E57-111	.TERMINAL JUNCTION MODULE- (V14283)		1
X6-DAB	MRTB20E57-111	.TERMINAL JUNCTION MODULE- (V14283)		1
Y12-DAB	MRTB20E57-111	.TERMINAL JUNCTION MODULE- (V14283)		1
Y14-DAB	MRTB20E57-111	.TERMINAL JUNCTION MODULE- (V14283)		1
Y6-DAB	MRTB20E04-111	.TERMINAL JUNCTION MODULE- (V14283)		1
		MISSING ITEM NO. NOT APPLICABLE		

– ITEM NOT ILLUSTRATED

CHAPTER 33

LIGHTS

CHAPTER 33 - LIGHTS

TABLE OF CONTENTS

SUBJECT	CHAPTER SECTION UNIT	FIGURE	EFFECT
FLIGHT COMPARTMENT	33-10-00		
COCKPIT LIGHTING	33-10-05	5	091109
COCKPIT LIGHTING	33-10-05	7	110131
			223223
			225225
			229232
			234234
			236236
			238243
			246252
COCKPIT LIGHTING	33-10-05	8	132163
			166166
			168176
COCKPIT LIGHTING	33-10-05	9	164165
			167167
			177179
			181221
			244245
			253257
			259276
COCKPIT LIGHTING	33-10-05	11	222222
			224224
			226228
			233233
			235235
			237237
			258258
COCKPIT LIGHTS	33-10-10	31	111111
			113113
			124124
			144144
			171171
			178178
			235235
			237237
SUPPLIES FOR INTEGRAL LIGHTS	33-10-20	4	091131
			223223
			225225
			229232
			234234

CHAPTER 33 - LIGHTS

TABLE OF CONTENTS

SUBJECT	CHAPTER SECTION UNIT	FIGURE	EFFECT
			236236
			238243
			246252
SUPPLIES FOR INTEGRAL LIGHTS	33-10-20	7	132163
			166166
			168176
SUPPLIES FOR INTEGRAL LIGHTS	33-10-20	8	164165
			167167
			177179
			181221
			244245
			253257
			259276

CHAPTER 33 - LIGHTS

TABLE OF CONTENTS

SUBJECT	CHAPTER SECTION UNIT	FIGURE	EFFECT
CABIN STANDBY	33-20-00		
STANDBY LIGHTS	33-20-10	10	258258

CHAPTER 33 - LIGHTS

TABLE OF CONTENTS

SUBJECT	CHAPTER SECTION UNIT	FIGURE	EFFECT
MISCELLANEOUS	33-30-00		
MISCELLANEOUS LIGHTS	33-30-05	7	091091
			097097
			133134
			143143
			149149
			177177
			182182
			192192
			194194
			197197
MISCELLANEOUS LIGHTS	33-30-05	8	092093
			095096
			098105
			107108
			111111
			113114
			117117
			119119
			121129
			132132
			135142
			144145
			147147
			150163
			166166
			168176
			178179
			181181
			183183
			185185
			187189
			191191
			193193
			195196
			199207
			209209
			212218
			220221
			223223
			225225

CHAPTER 33 - LIGHTS

TABLE OF CONTENTS

SUBJECT	CHAPTER SECTION UNIT	FIGURE	EFFECT
			229232
			234234
			236236
			238257
			259276
MISCELLANEOUS LIGHTS-TAIL	33-30-15	7	094094
			149149
			180180
			211212
			240240
			243243
REAR EQUIPMENT BAY	33-31-00		
REAR EQUIPMENT BAY LIGHTING	33-31-10	4	091276

CHAPTER 33 - LIGHTS

TABLE OF CONTENTS

SUBJECT	CHAPTER SECTION UNIT	FIGURE	EFFECT
EXTERIOR	33-40-00		
LANDING AND TAXI LIGHTS	33-40-20	4	091276
NAVIGATION,BEACON AND STROBE LIGHTS	33-40-10	5	091276
NAVIGATION,BEACON AND STROBE LIGHTS	33-40-10	6	091276
TAXI LIGHTS IN NOSE	33-40-15	2	094094
			120120
			149149
			167167
			180180
			208208
			211211
			219219
			222222
			224224
			226228
			233233
			235235
			237237
			258258
WING INSPECTION SPOTLIGHT	33-40-30	3	091276

CHAPTER 33 - LIGHTS

TABLE OF CONTENTS

SUBJECT	CHAPTER SECTION UNIT	FIGURE	EFFECT
EMERGENCY	33-50-00		
EMERGENCY LIGHTS	33-50-10	9	091179
			181189
			191207
			209210
			212223
			225225
			228232
			234234
			236236
			238276

CH-SECT-UNIT-FIG	PAGE NO.	DATE
*33	1	AUG 31/03
*33	2	AUG 31/03
*33	3	AUG 31/03
*33	4	AUG 31/03
*33	5	AUG 31/03
*33	6	AUG 31/03
*33	7	AUG 31/03
33-10-00	1	MAY 31/02
33-10-05- 5	0	NOV 30/02
33-10-05- 5	0A	MAY 31/02
33-10-05- 5	0B	MAY 31/02
33-10-05- 5	0C	MAY 31/02
33-10-05- 5	1	MAY 31/02
33-10-05- 5	2	MAY 31/02
33-10-05- 5	3	MAY 31/02
33-10-05- 5	4	MAY 31/02
33-10-05- 5	5	MAY 31/02
33-10-05- 5	6	MAY 31/02
33-10-05- 5	7	MAY 31/02
33-10-05- 5	8	MAY 31/02
33-10-05- 5	9	MAY 31/02
33-10-05- 5	10	MAY 31/02
33-10-05- 5	11	MAY 31/02
33-10-05- 5	12	MAY 31/02
33-10-05- 7	0	NOV 30/02
33-10-05- 7	0A	MAY 31/02
33-10-05- 7	0B	MAY 31/02
33-10-05- 7	0C	MAY 31/02
33-10-05- 7	1	MAY 31/02
33-10-05- 7	2	MAY 31/02
33-10-05- 7	3	MAY 31/02
33-10-05- 7	4	MAY 31/02
33-10-05- 7	5	MAY 31/02
33-10-05- 7	6	MAY 31/02
33-10-05- 7	7	MAY 31/02
33-10-05- 7	8	MAY 31/02
33-10-05- 7	9	MAY 31/02
33-10-05- 7	10	MAY 31/02
33-10-05- 7	11	MAY 31/02
33-10-05- 7	12	MAY 31/02
33-10-05- 7	13	MAY 31/02
33-10-05- 8	0	NOV 30/02
33-10-05- 8	0A	MAY 31/02
33-10-05- 8	0B	MAY 31/02
33-10-05- 8	0C	MAY 31/02
33-10-05- 8	1	MAY 31/02
33-10-05- 8	2	MAY 31/02
33-10-05- 8	3	MAY 31/02
33-10-05- 8	4	MAY 31/02
33-10-05- 8	5	MAY 31/02
33-10-05- 8	6	MAY 31/02

CH-SECT-UNIT-FIG	PAGE NO.	DATE
33-10-05- 8	7	MAY 31/02
33-10-05- 8	8	MAY 31/02
33-10-05- 8	9	MAY 31/02
33-10-05- 8	10	MAY 31/02
33-10-05- 8	11	MAY 31/02
33-10-05- 8	12	MAY 31/02
33-10-05- 9	0	NOV 30/02
33-10-05- 9	0A	MAY 31/02
33-10-05- 9	0B	MAY 31/02
33-10-05- 9	0C	MAY 31/02
33-10-05- 9	1	MAY 31/02
33-10-05- 9	2	MAY 31/02
33-10-05- 9	3	MAY 31/02
33-10-05- 9	4	MAY 31/02
33-10-05- 9	5	MAY 31/02
33-10-05- 9	6	MAY 31/02
33-10-05- 9	7	MAY 31/02
33-10-05- 9	8	MAY 31/02
33-10-05- 9	9	MAY 31/02
33-10-05- 9	10	MAY 31/02
33-10-05- 9	11	MAY 31/02
33-10-05- 9	12	MAY 31/02
33-10-05- 9	13	MAY 31/02
33-10-05- 9	14	MAY 31/02
33-10-05- 9	15	MAY 31/02
33-10-05-11	0	NOV 30/02
33-10-05-11	0A	MAY 31/02
33-10-05-11	0B	NOV 30/02
33-10-05-11	0C	MAY 31/02
33-10-05-11	1	MAY 31/02
33-10-05-11	2	MAY 31/02
33-10-05-11	3	MAY 31/02
33-10-05-11	4	MAY 31/02
33-10-05-11	5	MAY 31/02
33-10-05-11	6	MAY 31/02
33-10-05-11	7	MAY 31/02
33-10-05-11	8	MAY 31/02
33-10-05-11	9	MAY 31/02
33-10-05-11	10	MAY 31/02
33-10-05-11	11	MAY 31/02
33-10-05-11	12	MAY 31/02
33-10-05-11	13	MAY 31/02
33-10-05-11	14	MAY 31/02
33-10-05-11	15	MAY 31/02
33-10-05-11	16	MAY 31/02
33-10-10-31	0	MAY 31/02
33-10-10-31	1	MAY 31/02
33-10-10-31	2	MAY 31/02
33-10-10-31	3	MAY 31/02
33-10-10-31	4	MAY 31/02
33-10-20- 4	0	MAY 31/02

*THE ASTERISK INDICATES PAGES CHANGED OR ADDED BY THE CURRENT REVISION

CH-SECT-UNIT-FIG	PAGE NO.	DATE
33-10-20- 4	0A	MAY 31/02
33-10-20- 4	1	MAY 31/02
33-10-20- 4	2	MAY 31/02
33-10-20- 4	3	MAY 31/02
33-10-20- 4	4	MAY 31/02
33-10-20- 4	5	MAY 31/02
33-10-20- 4	6	MAY 31/02
33-10-20- 4	7	MAY 31/02
33-10-20- 4	8	MAY 31/02
33-10-20- 4	9	MAY 31/02
33-10-20- 4	10	MAY 31/02
33-10-20- 7	0	MAY 31/02
33-10-20- 7	0A	MAY 31/02
33-10-20- 7	1	MAY 31/02
33-10-20- 7	2	MAY 31/02
33-10-20- 7	3	MAY 31/02
33-10-20- 7	4	MAY 31/02
33-10-20- 7	5	MAY 31/02
33-10-20- 7	6	MAY 31/02
33-10-20- 7	7	MAY 31/02
33-10-20- 7	8	MAY 31/02
33-10-20- 8	0	NOV 30/02
33-10-20- 8	0A	NOV 30/02
33-10-20- 8	1	MAY 31/02
33-10-20- 8	2	MAY 31/02
33-10-20- 8	3	MAY 31/02
33-10-20- 8	4	MAY 31/02
33-10-20- 8	5	MAY 31/02
33-10-20- 8	6	MAY 31/02
33-10-20- 8	7	MAY 31/02
33-10-20- 8	8	MAY 31/02
33-10-20- 8	9	MAY 31/02
33-10-20- 8	10	MAY 31/02
33-20-00	1	MAY 31/02
33-20-10-10	0	MAY 31/02
33-20-10-10	1	MAY 31/02
33-20-10-10	2	MAY 31/02
33-30-00	1	MAY 31/02
33-30-05- 7	0	MAY 31/02
33-30-05- 7	1	MAY 31/02
33-30-05- 7	2	MAY 31/02
33-30-05- 8	0	NOV 30/02
*33-30-05- 8	1	AUG 31/03
*33-30-05- 8	2	AUG 31/03
33-30-05- 8	3	MAY 31/02
33-30-05- 8	4	MAY 31/02
33-30-05- 8	5	MAY 31/02
33-30-05- 8	6	MAY 31/02
33-30-05- 8	7	MAY 31/02
33-30-05- 8	8	MAY 31/02
33-30-15- 7	0	MAY 31/02
33-30-15- 7	1	MAY 31/02
33-30-15- 7	2	MAY 31/02
33-31-00	1	MAY 31/02
33-31-10- 4	0	MAY 31/02
33-31-10- 4	1	MAY 31/02
33-40-00	1	MAY 31/02
33-40-10- 5	0	MAY 31/02
33-40-10- 5	0A	MAY 31/02
33-40-10- 5	1	MAY 31/02
33-40-10- 5	2	MAY 31/02
33-40-10- 5	3	MAY 31/02
33-40-10- 5	4	MAY 31/02
33-40-10- 5	5	MAY 31/02
33-40-10- 6	0	MAY 31/02
33-40-10- 6	0A	MAY 31/02
33-40-10- 6	1	MAY 31/02
33-40-10- 6	2	MAY 31/02
33-40-10- 6	3	MAY 31/02
33-40-10- 6	4	MAY 31/02
33-40-15- 2	0	MAY 31/02
33-40-15- 2	1	MAY 31/02
33-40-15- 2	2	MAY 31/02
33-40-20- 4	0	MAY 31/02
33-40-20- 4	1	MAY 31/02
33-40-20- 4	2	MAY 31/02
33-40-20- 4	3	MAY 31/02
33-40-20- 4	4	MAY 31/02
33-40-20- 4	5	MAY 31/02
33-40-30- 3	0	MAY 31/02
33-40-30- 3	1	MAY 31/02
33-40-30- 3	2	MAY 31/02
33-50-00	1	MAY 31/02
33-50-10- 9	0	MAY 31/02
33-50-10- 9	1	MAY 31/02
33-50-10- 9	2	MAY 31/02
33-50-10- 9	3	MAY 31/02
33-50-10- 9	4	MAY 31/02

*THE ASTERISK INDICATES PAGES CHANGED OR ADDED BY THE CURRENT REVISION

FLIGHT COMPARTMENT

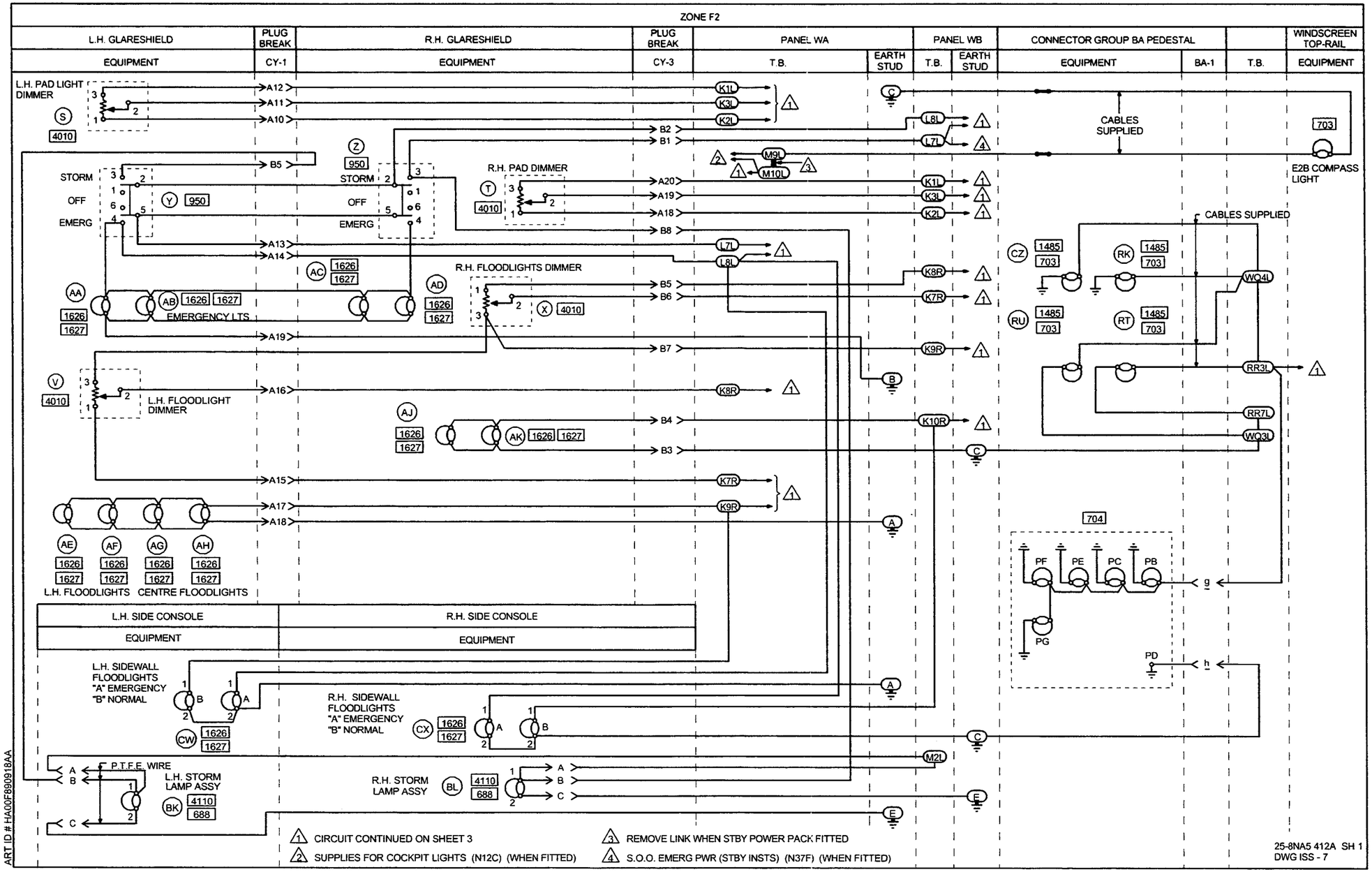
ZONE F2
L.H. GLARESHIELD
PLUG BREAK
R.H. GLARESHIELD
PLUG BREAK
PANEL WA
PANEL WB
CONNECTOR GROUP BA PEDESTAL
WINDSCREEN TOP-RAIL
EQUIPMENT
CY-1
EQUIPMENT
CY-3
T.B.
EARTH STUD
T.B.
EARTH STUD
EQUIPMENT
BA-1
T.B.
EQUIPMENT
L.H. PAD LIGHT DIMMER
CABLES SUPPLIED
E2B COMPASS LIGHT
STORM
OFF
EMERG
R.H. PAD DIMMER
R.H. FLOODLIGHTS DIMMER
EMERGENCY LTS
L.H. FLOODLIGHT DIMMER
L.H. FLOODLIGHTS
CENTRE FLOODLIGHTS
L.H. SIDE CONSOLE
R.H. SIDE CONSOLE
EQUIPMENT
EQUIPMENT
L.H. SIDEWALL FLOODLIGHTS "A" EMERGENCY "B" NORMAL
R.H. SIDEWALL FLOODLIGHTS "A" EMERGENCY "B" NORMAL
P.T.F.E. WIRE
L.H. STORM LAMP ASSY
R.H. STORM LAMP ASSY
1 CIRCUIT CONTINUED ON SHEET 3
2 SUPPLIES FOR COCKPIT LIGHTS (N12C) (WHEN FITTED)
3 REMOVE LINK WHEN STBY POWER PACK FITTED
4 S.O.O. EMERG PWR (STBY INSTS) (N37F) (WHEN FITTED)
ART ID # HA00F990918AA
25-8NA5 412A SH 1
DWG ISS - 7

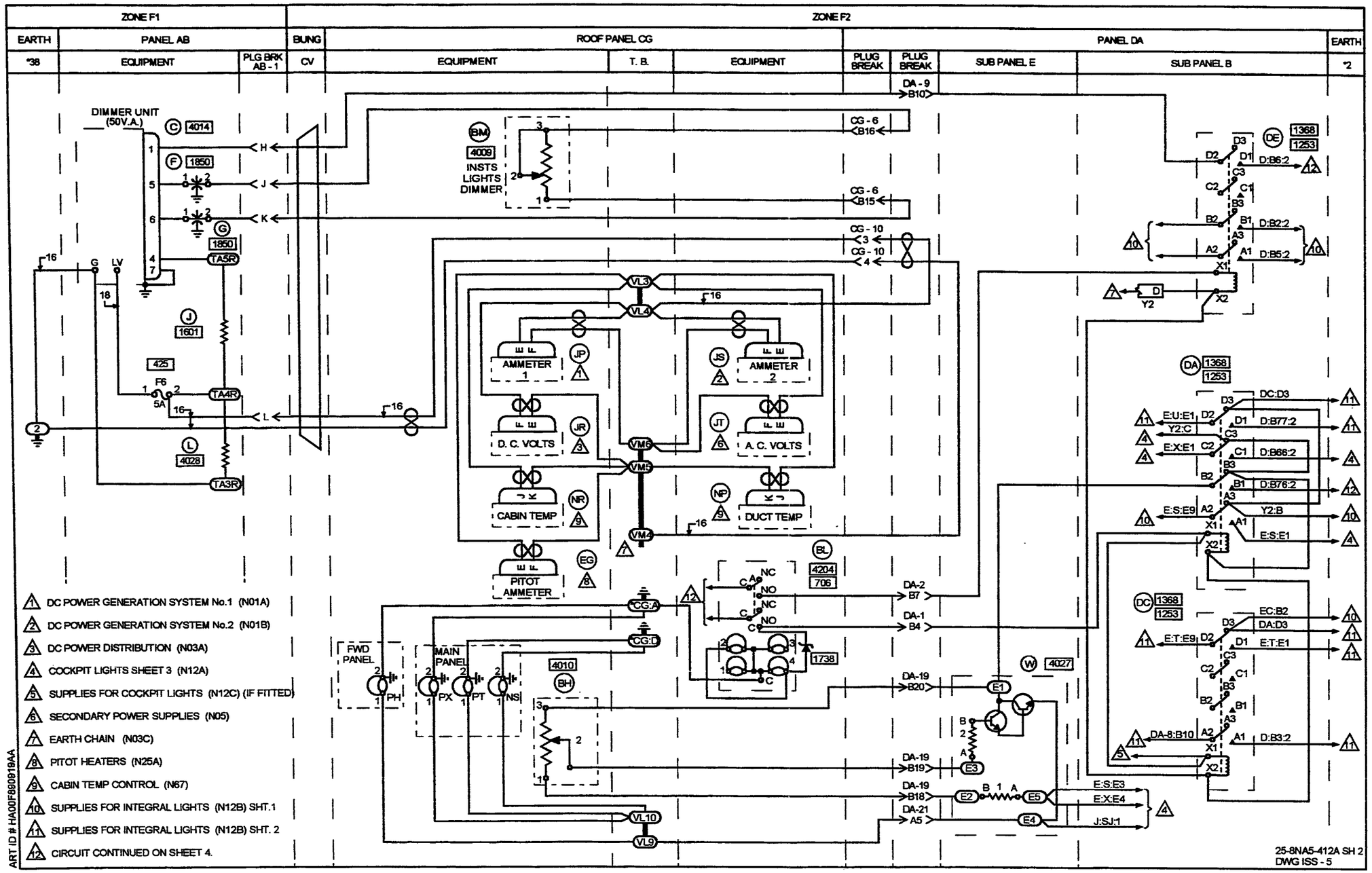
ZONE F1
ZONE F2
EARTH
PANEL AB
BUNG
ROOF PANEL CG
PANEL DA
EARTH
*38
EQUIPMENT
PLG BRK AB - 1
CV
EQUIPMENT
T. B.
EQUIPMENT
PLUG BREAK
PLUG BREAK
SUB PANEL E
SUB PANEL B
*2
DA - 9
B10
DIMMER UNIT (50V.A.)
4014
1850
1850
TA5R
1601
425
F6
5A
TA4R
4028
TA3R
INSTS LIGHTS DIMMER
4009
CG - 6
B16
CG - 6
B15
CG - 10
CG - 10
VL3
VL4
AMMETER 1
AMMETER 2
D. C. VOLTS
A. C. VOLTS
CABIN TEMP
DUCT TEMP
VM6
VM5
VM4
PITOT AMMETER
4204
706
DA-2
B7
DA-1
B4
CG:A
CG:D
FWD PANEL
MAIN PANEL
4010
1738
DA-19
B20
DA-19
B19
DA-19
B18
DA-21
A5
4027
E:S:E3
E:X:E4
J:SJ:1
VL10
VL9
1368
1253
D:B6:2
D:B2:2
D:B5:2
DC:D3
E:U:E1
Y2:C
D:B77:2
E:X:E1
D:B66:2
D:B76:2
E:S:E9
Y2:B
E:S:E1
EC:B2
DA:D3
E:T:E9
E:T:E1
DA-8:B10
D:B3:2
25-8NA5-412A SH 2
DWG ISS - 5
1 DC POWER GENERATION SYSTEM No.1 (N01A)
2 DC POWER GENERATION SYSTEM No.2 (N01B)
3 DC POWER DISTRIBUTION (N03A)
4 COCKPIT LIGHTS SHEET 3 (N12A)
5 SUPPLIES FOR COCKPIT LIGHTS (N12C) (IF FITTED)
6 SECONDARY POWER SUPPLIES (N05)
7 EARTH CHAIN (N03C)
8 PITOT HEATERS (N25A)
9 CABIN TEMP CONTROL (N67)
10 SUPPLIES FOR INTEGRAL LIGHTS (N12B) SHT.1
11 SUPPLIES FOR INTEGRAL LIGHTS (N12B) SHT. 2
12 CIRCUIT CONTINUED ON SHEET 4.
ART ID # HA00F890919AA

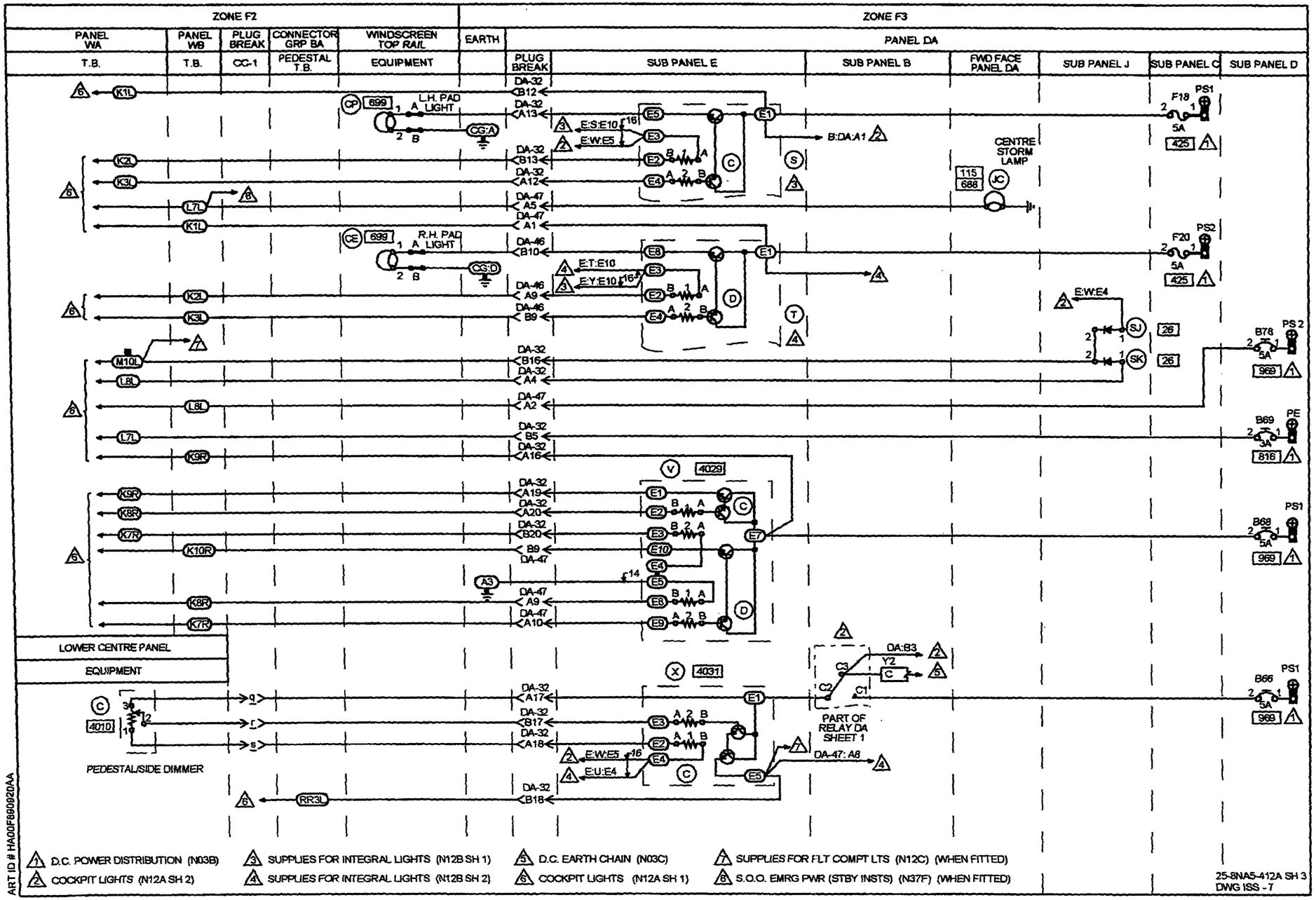
ZONE F2
ZONE F3
PANEL WA
PANEL WB
PLUG BREAK
CONNECTOR GRP BA
WINDSCREEN TOP RAIL
EARTH
PANEL DA
T.B.
T.B.
CC-1
PEDESTAL T.B.
EQUIPMENT
PLUG BREAK
SUB PANEL E
SUB PANEL B
FWD FACE PANEL DA
SUB PANEL J
SUB PANEL C
SUB PANEL D
L.H. PAD LIGHT
R.H. PAD LIGHT
CENTRE STORM LAMP
PART OF RELAY DA SHEET 1
LOWER CENTRE PANEL
EQUIPMENT
PEDESTAL/SIDE DIMMER
1 D.C. POWER DISTRIBUTION (N03B)
2 COCKPIT LIGHTS (N12A SH 2)
3 SUPPLIES FOR INTEGRAL LIGHTS (N12B SH 1)
4 SUPPLIES FOR INTEGRAL LIGHTS (N12B SH 2)
5 D.C. EARTH CHAIN (N03C)
6 COCKPIT LIGHTS (N12A SH 1)
7 SUPPLIES FOR FLT COMPT LTS (N12C) (WHEN FITTED)
8 S.O.O. EMRG PWR (STBY INSTS) (N37F) (WHEN FITTED)
25-8NA5-412A SH 3
DWG ISS - 7
ART ID # HA00F690920AA

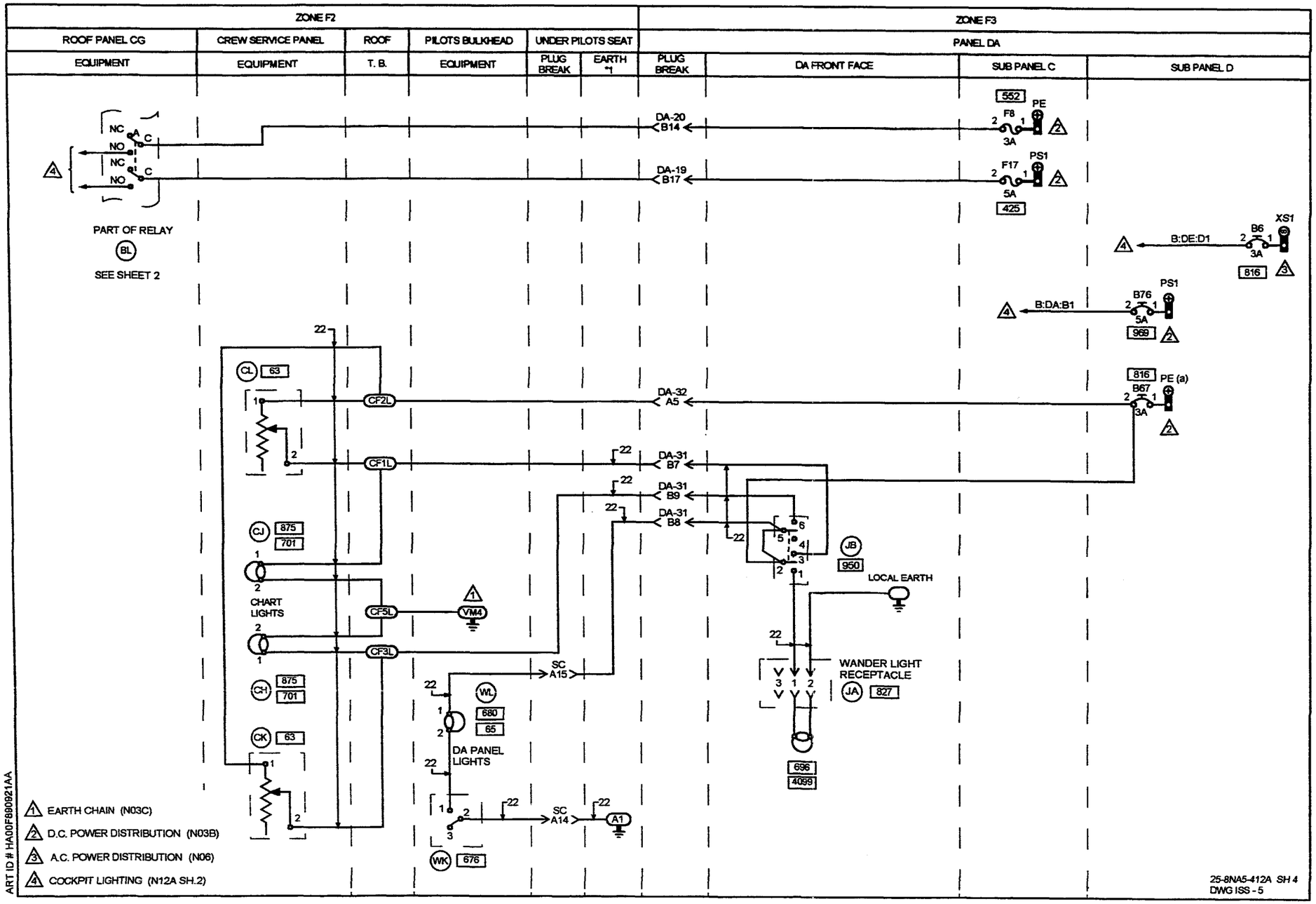
ZONE F2
ZONE F3
ROOF PANEL CG
CREW SERVICE PANEL
ROOF
PILOTS BULKHEAD
UNDER PILOTS SEAT
PANEL DA
EQUIPMENT
EQUIPMENT
T. B.
EQUIPMENT
PLUG BREAK
EARTH *1
PLUG BREAK
DA FRONT FACE
SUB PANEL C
SUB PANEL D
NC
NO
NC
NO
A
C
C
PART OF RELAY
BL
SEE SHEET 2
DA-20
B14
DA-19
B17
552
PE
F8
3A
PS1
F17
5A
425
XS1
B6
3A
B:DE:D1
816
PS1
B76
5A
B:DA:B1
969
816
PE (a)
B67
3A
CL
63
CF2L
DA-32
A5
CF1L
DA-31
B7
DA-31
B9
DA-31
B8
CJ
875
701
CHART LIGHTS
CF5L
VM4
CF3L
SC
A15
CH
875
701
CK
63
WL
680
65
DA PANEL LIGHTS
SC
A14
A1
WK
676
JB
950
LOCAL EARTH
WANDER LIGHT RECEPTACLE
JA
827
696
4099
EARTH CHAIN (N03C)
D.C. POWER DISTRIBUTION (N03B)
A.C. POWER DISTRIBUTION (N06)
COCKPIT LIGHTING (N12A SH.2)
ART ID # HA00F890921AA
25-8NA5-412A SH 4
DWG ISS - 5

IDENT	PART NUMBER	1234567 NOMENCLATURE	EFFECT FROM TO	UNITS PER ASSY
		COCKPIT LIGHTING	091109	
	25-8NA5-412A	WIRING DIAGRAM- (MOD 253149C)		RF
AA	MBC17	.LAMP HOLDER- (VU0928) (FOR SPARES PROCURE MBC004)		1
AA	MBC004	.LAMP HOLDER- (VU0928) (FOR SPARES PROCURE IN LIEU OF MBC17)		1
AB	MBC17	.LAMP HOLDER- (VU0928) (FOR SPARES PROCURE MBC004)		1
AB	MBC004	.LAMP HOLDER- (VU0928) (FOR SPARES PROCURE IN LIEU OF MBC17)		1
AB1-P	BAEREF000004167	.CONNECTOR-SOCKET (6027-20-16SNCONDD (VK1793))		1
AB1-R	BAEREF000003937	.CONNECTOR-PIN (6026-20-16PNCONDD (VK1793))		1
AC	MBC17	.LAMP HOLDER- (VU0928) (FOR SPARES PROCURE MBC004)		1
AC	MBC004	.LAMP HOLDER- (VU0928) (FOR SPARES PROCURE IN LIEU OF MBC17)		1
AD	MBC17	.LAMP HOLDER- (VU0928) (FOR SPARES PROCURE MBC004)		1
AD	MBC004	.LAMP HOLDER- (VU0928) (FOR SPARES PROCURE IN LIEU OF MBC17)		1
AE	MBC17	.LAMP HOLDER- (VU0928) (FOR SPARES PROCURE MBC004)		1
AE	MBC004	.LAMP HOLDER- (VU0928) (FOR SPARES PROCURE IN LIEU OF MBC17)		1
		MISSING ITEM NO. NOT APPLICABLE		

– ITEM NOT ILLUSTRATED

IDENT	PART NUMBER	1234567 NOMENCLATURE	EFFECT FROM TO	UNITS PER ASSY
AF	MBC17	.LAMP HOLDER- (VU0928) (FOR SPARES PROCURE MBC004)		1
AF	MBC004	.LAMP HOLDER- (VU0928) (FOR SPARES PROCURE IN LIEU OF MBC17)		1
AG	MBC17	.LAMP HOLDER- (VU0928) (FOR SPARES PROCURE MBC004)		1
AG	MBC004	.LAMP HOLDER- (VU0928) (FOR SPARES PROCURE IN LIEU OF MBC17)		1
AH	MBC17	.LAMP HOLDER- (VU0928) (FOR SPARES PROCURE MBC004)		1
AH	MBC004	.LAMP HOLDER- (VU0928) (FOR SPARES PROCURE IN LIEU OF MBC17)		1
AJ	MBC17	.LAMP HOLDER- (VU0928) (FOR SPARES PROCURE MBC004)		1
AJ	MBC004	.LAMP HOLDER- (VU0928) (FOR SPARES PROCURE IN LIEU OF MBC17)		1
AK	MBC17	.LAMP HOLDER- (VU0928) (FOR SPARES PROCURE MBC004)		1
AK	MBC004	.LAMP HOLDER- (VU0928) (FOR SPARES PROCURE IN LIEU OF MBC17)		1
BA1-P	BAEREF000003205	.CONNECTOR-SOCKET (6027-18-32SNCONDB (VK1793)) (OPT 6027-18-32S (VK4161)) (USED WITH OUTLET: GTR71-18NACS1 (VU0419) (OPT 602GR133-18-1 (VK1100)))		1
		MISSING ITEM NO. NOT APPLICABLE		

– ITEM NOT ILLUSTRATED

IDENT	PART NUMBER	1234567 NOMENCLATURE	EFFECT FROM TO	UNITS PER ASSY
BA1-R	BAEREF000003662	.CONNECTOR-PIN (6026-18-32PNCONDB (VK1793))		1
BH-CG	140-4538	.POTENTIOMETER- (VK1021)		1
BK	25-8NF905-1A	.STORM LAMP ASSY (USED WITH: PIN CONNECTOR 6020-8-33PNCONDD SOCKET CONNECTOR 6026-8-33SNCONDD (VK1793))		1
BL	25-8NF905-1A	.STORM LAMP ASSY (USED WITH: PIN CONNECTOR 6020-8-33PNCONDD SOCKET CONNECTOR 6026-8-33SNCONDD (VK1793))		1
BL-CG	99-222	.SWITCH- (V32245) (USED WITH ZENER DIODE: 1N5350B (VK5519))		1
BM-CG	140-4537	.POTENTIOMETER- (VK1021)		1
B6-DAD	483TCG11J25-3A	.CIRCUIT BREAKER-3AMP (VU0091)		1
B66-DAD	483TCG11J25-5A	.CIRCUIT BREAKER-5AMP (VU0091)		1
B67-DAD	483TCG11J25-3A	.CIRCUIT BREAKER-3AMP (VU0091)		1
B68-DAD	483TCG11J25-5A	.CIRCUIT BREAKER-5AMP (VU0091)		1
B69-DAD	483TCG11J25-3A	.CIRCUIT BREAKER-3AMP (VU0091)		1
B76-DAD	483TCG11J25-5A	.CIRCUIT BREAKER-5AMP (VU0091)		1
B78-DAD	483TCG11J25-5A	.CIRCUIT BREAKER-5AMP (VU0091)		1
C	140-4538	.POTENTIOMETER- (VK1021)		1
C-AB	4-013-01	.DIMMER UNIT-50VA (VK2472) (USED WITH: CONNECTOR SOCKET LS10215R12-12SN CABLE SUPPORT 94002-12 (VK1793))		1
		MISSING ITEM NO. NOT APPLICABLE		

– ITEM NOT ILLUSTRATED

IDENT	PART NUMBER	1234567 NOMENCLATURE	EFFECT FROM TO	UNITS PER ASSY
C-S-DAE	BDX67A	.TRANSISTOR- (VK3954) (USED ON 25-8NF405-503A)		2
C-V-DAE	BDX67A	.TRANSISTOR- (VK3954) (USED ON 25-8NF399-503A)		2
C-X-DAE	BDX67A	.TRANSISTOR- (VK3954) (USED ON 25-8NF401-503A)		2
CC1-P	BAEREF000003123	.CONNECTOR-SOCKET (6027-20-41SNCONDB (VK1793)) (USED WITH STRAIN RELIEF GTR62-20NACS1 (VU0419))		1
CC1-R	6026-20-41P	.CONNECTOR-PLUG (VK4161)		1
CE	25-8NF2921-1A	.LAMP HOLDER		1
CF	WBUN1736D10B	.TERMINAL BLOCK- (VK0574)		1
CG10-P	MTCR161-04P	.CONNECTOR-PIN (VK1010)		1
CG10-R	MTCR101-04S	.CONNECTOR-SOCKET (VK1010)		1
CG6-P	MTC100YH2-009	.SHELL-PLUG (VK1010) (USED WITH WAFERS: TYPE A, MTC100KT2-1101 TYPE B, MTC100KT2-1102)		1
CG6-R	MTC100YH2-010	.SHELL-RECEPTACLE (VK1010) (USED WITH WAFERS: TYPE A, MTC100KT2-1103 TYPE B, MTC100KT2-1104)		1
CH	25NF9557A	.LIGHT UNIT- (OPT 1PD1862-68NS (VK0310))		1
CJ	25NF9557A	.LIGHT UNIT- (OPT 1PD1862-68NS (VK0310))		1
CK	25DC237-9	.DIMMER SWITCH- (VK0690)		1
CL	25DC237-9	.DIMMER SWITCH- (VK0690)		1
CP	25-8NF2921-1A	.LAMP HOLDER		1
CV	422253-15	.BUNG- (VK1793)		1
		MISSING ITEM NO. NOT APPLICABLE		

– ITEM NOT ILLUSTRATED

IDENT	PART NUMBER	1234567 NOMENCLATURE	EFFECT FROM TO	UNITS PER ASSY
CW-A	MBC17	.LAMP HOLDER-EMERGENCY SIDEWALL FLOODLIGHTS (VU0928) (FOR SPARES PROCURE MBC004)		1
CW-A	MBC004	.LAMP HOLDER-EMERGENCY SIDEWALL FLOODLIGHTS (VU0928) (FOR SPARES PROCURE IN LIEU OF MBC17)		1
CW-B	MBC17	.LAMP HOLDER-NORMAL SIDEWALL FLOODLIGHTS (VU0928) (FOR SPARES PROCURE MBC004)		1
CW-B	MBC004	.LAMP HOLDER-NORMAL SIDEWALL FLOODLIGHTS (VU0928) (FOR SPARES PROCURE IN LIEU OF MBC17)		1
CX-A	MBC17	.LAMP HOLDER-EMERGENCY SIDEWALL FLOODLIGHTS (VU0928) (FOR SPARES PROCURE MBC004)		1
CX-A	MBC004	.LAMP HOLDER-EMERGENCY SIDEWALL FLOODLIGHTS (VU0928) (FOR SPARES PROCURE IN LIEU OF MBC17)		1
CX-B	MBC17	.LAMP HOLDER-NORMAL SIDEWALL FLOODLIGHTS (VU0928) (FOR SPARES PROCURE MBC004)		1
CX-B	MBC004	.LAMP HOLDER-NORMAL SIDEWALL FLOODLIGHTS (VU0928) (FOR SPARES PROCURE IN LIEU OF MBC17)		1
CY1-P	MTC100YH2-009	.SHELL-PLUG (VK1010) (USED WITH WAFERS: TYPE A, MTC100KT2-1103 TYPE B, MTC100KT2-1104)		1
CY1-R	MTC100YH2-010	.SHELL-RECEPTACLE (VK1010) (USED WITH WAFERS: TYPE A, MTC100KT2-1101 TYPE B, MTC100KT2-1102)		1
		MISSING ITEM NO. NOT APPLICABLE		

– ITEM NOT ILLUSTRATED

IDENT	PART NUMBER	1234567 NOMENCLATURE	EFFECT FROM TO	UNITS PER ASSY
CY3-P	MTC100YH2-009	.SHELL-PLUG (VK1010) (USED WITH WAFERS: TYPE A, MTC100KT2-1103 TYPE B, MTC100KT2-1104)		1
CY3-R	MTC100YH2-010	.SHELL-RECEPTACLE (VK1010) (USED WITH WAFERS: TYPE A, MTC100KT2-1101 TYPE B, MTC100KT2-1102)		1
CZ-BA	A6795C	.PILLAR LAMP- (VU0231)		1
D-T-DAE	BDX67A	.TRANSISTOR- (VK3954) (USED ON 25-8NF407-503A)		2
D-V-DAE	BDX67A	.TRANSISTOR- (VK3954) (USED ON 25-8NF399-503A)		2
DA-DAB	M400-1265	.RELAY- (VK6265) (USED WITH SOCKET: M12883-40-19 (V81349))		1
DA1-P	MTC100YH1-003	.SHELL-PLUG (VK1010) (USED WITH WAFERS: TYPE A, MTC100KT1-1101 TYPE B, MTC100KT1-1102)		1
DA1-R	MTC100YH1-004	.SHELL-RECEPTACLE (VK1010) (USED WITH WAFERS: TYPE A, MTC100KT1-1103 TYPE B, MTC100KT1-1104)		1
DA19-P	MTC100YH2-009	.SHELL-PLUG (VK1010) (USED WITH WAFERS: TYPE A, MTC100KT2-1101 TYPE B, MTC100KT2-1102)		1
DA19-R	MTC100YH2-010	.SHELL-RECEPTACLE (VK1010) (USED WITH WAFERS: TYPE A, MTC100KT2-1103 TYPE B, MTC100KT2-1104)		1
DA2-P	MTC100YH1-003	.SHELL-PLUG (VK1010) (USED WITH WAFERS: TYPE A, MTC100KT1-1101 TYPE B, MTC100KT1-1102)		1
		MISSING ITEM NO. NOT APPLICABLE		

– ITEM NOT ILLUSTRATED

IDENT	PART NUMBER	1234567 NOMENCLATURE	EFFECT FROM TO	UNITS PER ASSY
DA2-R	MTC100YH1-004	.SHELL-RECEPTACLE (VK1010) (USED WITH WAFERS: TYPE A, MTC100KT1-1103 TYPE B, MTC100KT1-1104)		1
DA20-P	MTC100YH2-009	.SHELL-PLUG (VK1010) (USED WITH WAFERS: TYPE A, MTC100KT2-1101 TYPE B, MTC100KT2-1102)		1
DA20-R	MTC100YH2-010	.SHELL-RECEPTACLE (VK1010) (USED WITH WAFERS: TYPE A, MTC100KT2-1103 TYPE B, MTC100KT2-1104)		1
DA21-P	MTC100YH2-009	.SHELL-PLUG (VK1010) (USED WITH WAFERS: TYPE A, MTC100KT2-1101 TYPE B, MTC100KT2-1102)		1
DA21-R	MTC100YH2-010	.SHELL-RECEPTACLE (VK1010) (USED WITH WAFERS: TYPE A, MTC100KT2-1103 TYPE B, MTC100KT2-1104)		1
DA31-P	MTC100YH2-009	.SHELL-PLUG (VK1010) (USED WITH WAFERS: TYPE A, MTC100KT2-1101 TYPE B, MTC100KT2-1102)		1
DA31-R	MTC100YH2-010	.SHELL-RECEPTACLE (VK1010) (USED WITH WAFERS: TYPE A, MTC100KT2-1103 TYPE B, MTC100KT2-1104)		1
DA32-P	MTC100YH2-009	.SHELL-PLUG (VK1010) (USED WITH WAFERS: TYPE A, MTC100KT2-1101 TYPE B, MTC100KT2-1102)		1
DA32-R	MTC100YH2-010	.SHELL-RECEPTACLE (VK1010) (USED WITH WAFERS: TYPE A, MTC100KT2-1103 TYPE B, MTC100KT2-1104)		1
DA46-P	MTC100YH1-003	.SHELL-PLUG (VK1010) (USED WITH WAFERS: TYPE A, MTC100KT1-1101 TYPE B, MTC100KT1-1102)		1
		MISSING ITEM NO. NOT APPLICABLE		

– ITEM NOT ILLUSTRATED

IDENT	PART NUMBER	1234567 NOMENCLATURE	EFFECT FROM TO	UNITS PER ASSY
DA46-R	MTC100YH1-004	.SHELL-RECEPTACLE (VK1010) (USED WITH WAFERS: TYPE A, MTC100KT1-1103 TYPE B, MTC100KT1-1104)		1
DA47-P	MTC100YH1-003	.SHELL-PLUG (VK1010) (USED WITH WAFERS: TYPE A, MTC100KT1-1101 TYPE B, MTC100KT1-1102)		1
DA47-R	MTC100YH1-004	.SHELL-RECEPTACLE (VK1010) (USED WITH WAFERS: TYPE A, MTC100KT1-1103 TYPE B, MTC100KT1-1104)		1
DA9-P	MTC100YH1-003	.SHELL-PLUG (VK1010) (USED WITH WAFERS: TYPE A, MTCX1X100-100 TYPE B, MTC100KT1-1102)		1
DA9-R	MTC100YH1-004	.SHELL-RECEPTACLE (VK1010) (USED WITH WAFERS: TYPE A, MTCX1X100-100 TYPE B, MTC100KT1-1104)		1
DC-DAB	M400-1265	.RELAY- (VK6265) (USED WITH SOCKET: M12883-40-19 (V81349))		1
DE-DAB	M400-1265	.RELAY- (VK6265) (USED WITH SOCKET: M12883-40-19 (V81349))		1
EG-CG	2132-01-0017	.AMMETER-PITOT (VU1588)		1
E2B	L1338	.FILAMENT-E2B COMPASS LIGHT (VK0673)		1
F-AB	E1250-003	.CAPACITOR- (VK1672)		1
F17-DAC	5920-99-0120076	.FUSE-5AMP (VK0657)		1
F18-DAC	5920-99-0120076	.FUSE-5AMP (VK0657)		1
F20-DAC	5920-99-0120076	.FUSE-5AMP (VK0657)		1
F6-AB	5920-99-0120076	.FUSE-5AMP (VK0657)		1
		MISSING ITEM NO. NOT APPLICABLE		

– ITEM NOT ILLUSTRATED

IDENT	PART NUMBER	1234567 NOMENCLATURE	EFFECT FROM TO	UNITS PER ASSY
F8-DAC	5920-99-0120075	.FUSE-3AMP (VK0657)		1
G-AB	E1250-003	.CAPACITOR- (VK1672)		1
J-AB	5905-99-0135979	.RESISTOR- (VK0657)		1
JA-DA	18046D	.WANDER LIGHT- (VK1382)		1
JA-DA-P	SA2025	.3 PIN PLUG- (VU0928)		1
JA-DA-R	SA2026	.3 PIN SOCKET- (VU0948)		1
JB-DA	2TP1-1	.SWITCH- (V91929) (OPT (VK6596))		1
JC-DA	H1800C	.LAMP HOLDER- (VU1974)		1
JP-CG	2132-01-0013	.INDICATOR- (UNIT EXCHANGE ITEM) (VU1588)		1
JR-CG	2132-01-0012	.INDICATOR- (VU1588)		1
JS-CG	2132-01-0013	.INDICATOR- (UNIT EXCHANGE ITEM) (VU1588)		1
JT-CG	2132-01-0014	.VOLTMETER-AC (UNIT EXCHANGE ITEM) (VU1588)		1
K-WA	72444-030-0AV2	.TERMINAL BLOCK- (VK0574)		1
K-WB	72444-030-0AV2	.TERMINAL BLOCK- (VK0574)		1
L-AB	W22-4R7	.RESISTOR- (VK0064)		1
L-WA	72444-030-0AV2	.TERMINAL BLOCK- (VK0574)		1
L-WB	72444-030-0AV2	.TERMINAL BLOCK- (VK0574)		1
M-WA	72444-030-0AV2	.TERMINAL BLOCK- (VK0574)		1
M-WB	72444-030-0AV2	.TERMINAL BLOCK- (VK0574)		1
NP-CG	2132-01-0018	.INDICATOR-DUCT AIR TEMPERATURE (UNIT EXCHANGE ITEM) (VU1588)		1
NR-CG	2132-01-0015	.INDICATOR-CABIN TEMPERATURE (UNIT EXCHANGE ITEM) (VU1588)		1
		MISSING ITEM NO. NOT APPLICABLE		

– ITEM NOT ILLUSTRATED

IDENT	PART NUMBER	1234567 NOMENCLATURE	EFFECT FROM TO	UNITS PER ASSY
NS-CG	C52-10	.RECEPTACLE- (V06097)		1
PB-BA	B375-01	.LAMP HOLDER- (VK0673)		1
PC-BA	B375-01	.LAMP HOLDER- (VK0673)		1
PE-BA	B375-01	.LAMP HOLDER- (VK0673)		1
PF-BA	B375-01	.LAMP HOLDER- (VK0673)		1
PG-BA	B375-01	.LAMP HOLDER- (VK0673)		1
PH-CG	C52-10	.RECEPTACLE- (V06097)		1
PT-CG	C52-10	.RECEPTACLE- (V06097)		1
PX-CG	C52-10	.RECEPTACLE- (V06097)		1
RK-BA	A6795C	.PILLAR LAMP- (VU0231)		1
RR-BA	HWBUN1146D10B	.TERMINAL BLOCK- (VK0574)		1
RT-BA	A4896A7-24	.LAMP- (V72914)		1
RU-BA	A6795C	.PILLAR LAMP- (VU0231)		1
S	140-4538	.POTENTIOMETER- (VK1021)		1
S-DAE	25-8NF405-503A	.HEAT SINK ASSY (COMPRISING OF: TRANSISTOR BDX67A (VK3954) RESISTOR 5905-99-0135622 (VK0064) RESISTOR 5905-99-0135626 (VK0064) TERMINAL BLOCK HWBUN1736S10B (VK0574))		1
SC-P	MTC100YH2-009	.SHELL-PLUG (VK1010) (USED WITH WAFERS: TYPE A, MTC100KT2-1103 DUMMY B, MTCX2X200-200)		1
SC-R	MTC100YH2-010	.SHELL-RECEPTACLE (VK1010) (USED WITH WAFERS: TYPE A, MTC100KT2-1101 DUMMY B, MTCX2X200-X200)		1
		MISSING ITEM NO. NOT APPLICABLE		

– ITEM NOT ILLUSTRATED

IDENT	PART NUMBER	1234567 NOMENCLATURE	EFFECT FROM TO	UNITS PER ASSY
SJ-DAJ	CV7313	.DIODE- (VK0004)		1
SK-DAJ	CV7313	.DIODE- (VK0004)		1
T	140-4538	.POTENTIOMETER- (VK1021)		1
T-DAE	25-8NF407-503A	.HEAT SINK ASSY (COMPRISING OF: TRANSISTOR BDX67A (VK3954) RESISTOR 5905-99-0135622 (VK0064) RESISTOR 5905-99-0135626 (VK0064) TERMINAL BLOCK HWBUN1736S10B (VK0574))		1
TA-AB	HWBUN1146D5B	.TERMINAL BLOCK- (VK0574)		1
V	140-4538	.POTENTIOMETER- (VK1021)		1
V-DAE	25-8NF399-503A	.HEAT SINK ASSY (COMPRISING OF: TRANSISTOR BDX67A (VK3954) RESISTOR 5905-99-0135622 (VK0064) RESISTOR 5905-99-0135626 (VK0064) TERMINAL BLOCK HWBUN1736S10B (VK0574))		1
VL-CG	HWBUN1146S10B	.TERMINAL BLOCK- (VK0574)		1
VM-CG	HWBUN1146S10B	.TERMINAL BLOCK- (VK0574)		1
W-DAE	25-8NF403-503A	.HEAT SINK ASSY (COMPRISING OF: TRANSISTOR BDX67A (VK3954) RESISTOR 5905-99-0135622 (VK0064) RESISTOR 5905-99-0135626 (VK0064) TERMINAL BLOCK HWBUN1736S10B (VK0574))		1
WK	1TP1-3	.SWITCH- (VK6596)		1
		MISSING ITEM NO. NOT APPLICABLE		

– ITEM NOT ILLUSTRATED

IDENT	PART NUMBER	1234567 NOMENCLATURE	EFFECT FROM TO	UNITS PER ASSY
WL	M2641	.SPOT LAMP- (VU0801)		1
WQ-BA	HWBUN1736D10B	.TERMINAL BLOCK- (VK0574)		1
X	140-4538	.POTENTIOMETER- (VK1021)		1
X-DAE	25-8NF401-503A	.HEAT SINK ASSY (COMPRISING OF: TRANSISTOR BDX67A (VK3954) RESISTOR 5905-99-0135622 (VK0064) RESISTOR 5905-99-0135626 (VK0064) TERMINAL BLOCK HWBUN1736S10B (VK0574))		1
Y	512TS1-1	.SWITCH- (VK6596)		1
Y2-DAB	MRTB20E04-111	.TERMINAL JUNCTION MODULE- (V14283)		1
Z	512TS1-1	.SWITCH- (VK6596)		1

MISSING ITEM NO. NOT APPLICABLE

– ITEM NOT ILLUSTRATED

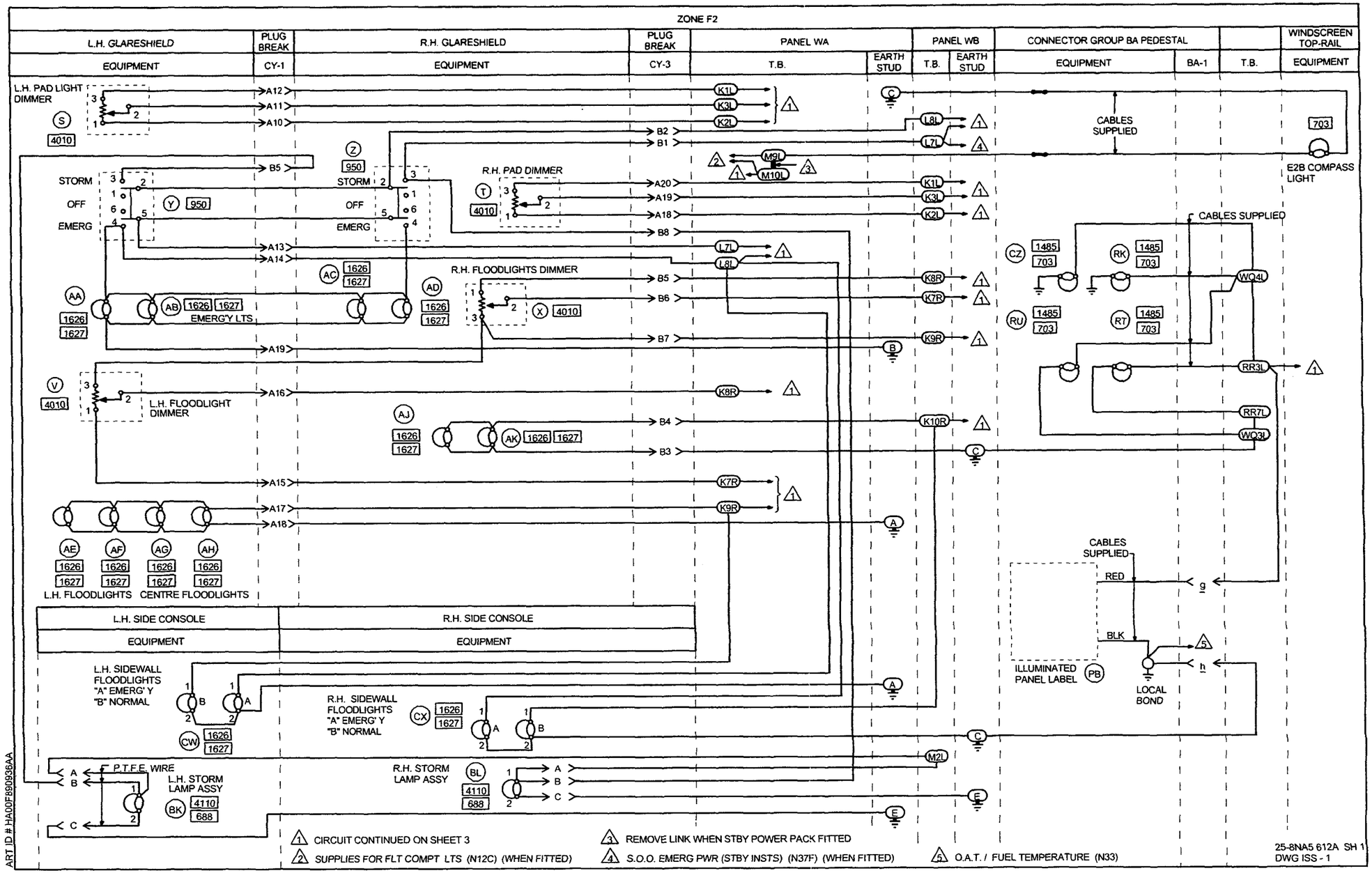
ZONE F2
L.H. GLARESHIELD
EQUIPMENT
PLUG BREAK
CY-1
R.H. GLARESHIELD
EQUIPMENT
PLUG BREAK
CY-3
PANEL WA
T.B.
EARTH STUD
PANEL WB
T.B.
EARTH STUD
CONNECTOR GROUP BA PEDESTAL
EQUIPMENT
BA-1
T.B.
WINDSCREEN TOP-RAIL
EQUIPMENT
L.H. PAD LIGHT DIMMER
CABLES SUPPLIED
E2B COMPASS LIGHT
STORM
OFF
EMERG
R.H. PAD DIMMER
R.H. FLOODLIGHTS DIMMER
EMERG'Y LTS
L.H. FLOODLIGHT DIMMER
L.H. FLOODLIGHTS
CENTRE FLOODLIGHTS
L.H. SIDE CONSOLE
EQUIPMENT
R.H. SIDE CONSOLE
EQUIPMENT
L.H. SIDEWALL FLOODLIGHTS "A" EMERG' Y "B" NORMAL
R.H. SIDEWALL FLOODLIGHTS "A" EMERG' Y "B" NORMAL
P.T.F.E. WIRE
L.H. STORM LAMP ASSY
R.H. STORM LAMP ASSY
ILLUMINATED PANEL LABEL
LOCAL BOND
RED
BLK
1 CIRCUIT CONTINUED ON SHEET 3
2 SUPPLIES FOR FLT COMPT LTS (N12C) (WHEN FITTED)
3 REMOVE LINK WHEN STBY POWER PACK FITTED
4 S.O.O. EMERG PWR (STBY INSTS) (N37F) (WHEN FITTED)
5 O.A.T. / FUEL TEMPERATURE (N33)
25-8NA5 612A SH 1
DWG ISS - 1
ART ID # HA00F890936AA

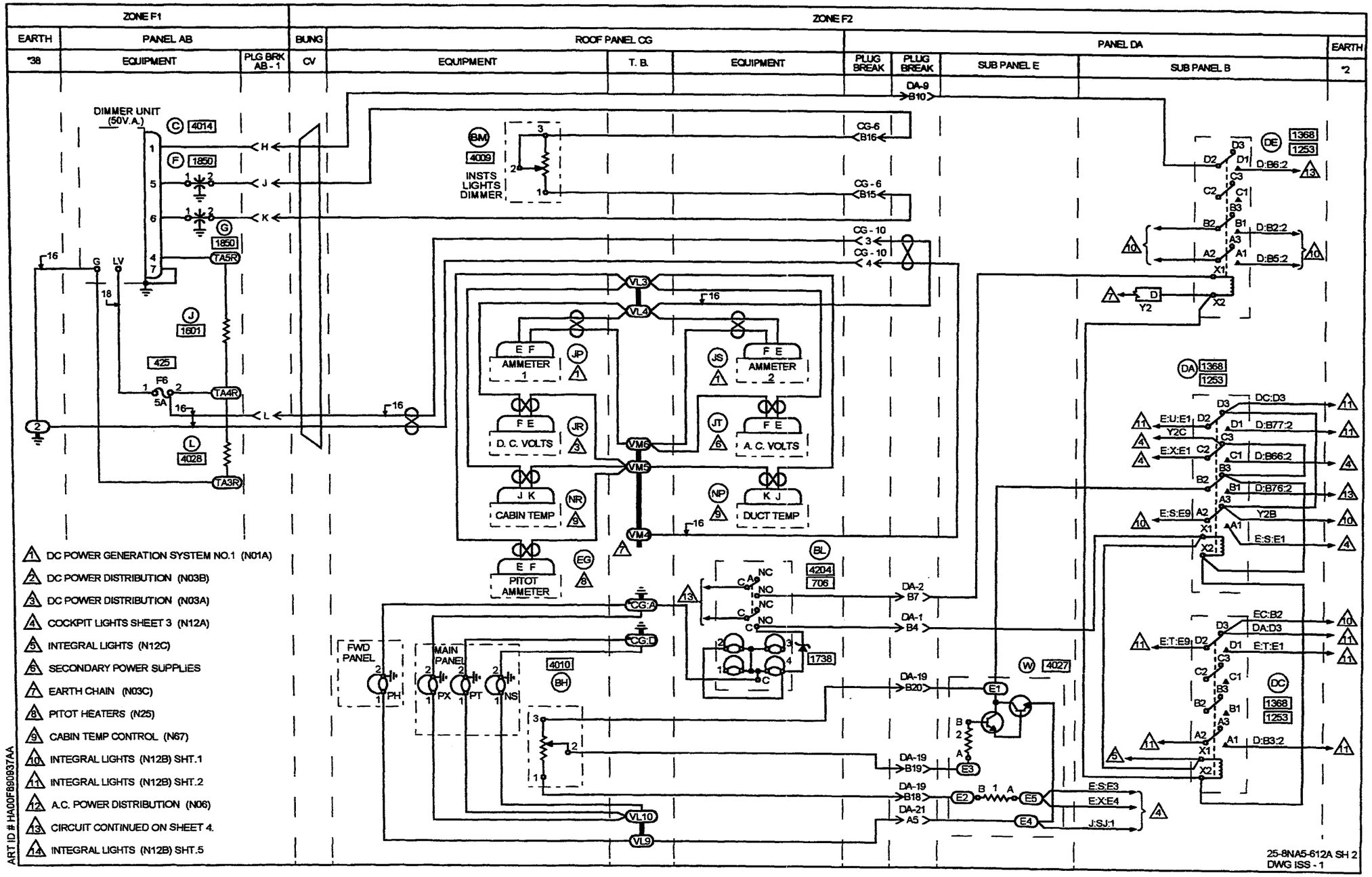
ZONE F1
ZONE F2
EARTH
PANEL AB
BUNG
ROOF PANEL CG
PANEL DA
EARTH
EQUIPMENT
PLG BRK AB - 1
CV
EQUIPMENT
T. B.
EQUIPMENT
PLUG BREAK
PLUG BREAK
SUB PANEL E
SUB PANEL B
DIMMER UNIT (50V.A.)
INSTS LIGHTS DIMMER
AMMETER 1
AMMETER 2
D. C. VOLTS
A. C. VOLTS
CABIN TEMP
DUCT TEMP
PITOT AMMETER
FWD PANEL
MAIN PANEL
1. DC POWER GENERATION SYSTEM NO.1 (N01A)
2. DC POWER DISTRIBUTION (N03B)
3. DC POWER DISTRIBUTION (N03A)
4. COCKPIT LIGHTS SHEET 3 (N12A)
5. INTEGRAL LIGHTS (N12C)
6. SECONDARY POWER SUPPLIES
7. EARTH CHAIN (N03C)
8. PITOT HEATERS (N25)
9. CABIN TEMP CONTROL (N67)
10. INTEGRAL LIGHTS (N12B) SHT.1
11. INTEGRAL LIGHTS (N12B) SHT.2
12. A.C. POWER DISTRIBUTION (N06)
13. CIRCUIT CONTINUED ON SHEET 4.
14. INTEGRAL LIGHTS (N12B) SHT.5
ART ID # HA00F890937AA
25-8NA5-612A SH 2
DWG ISS - 1

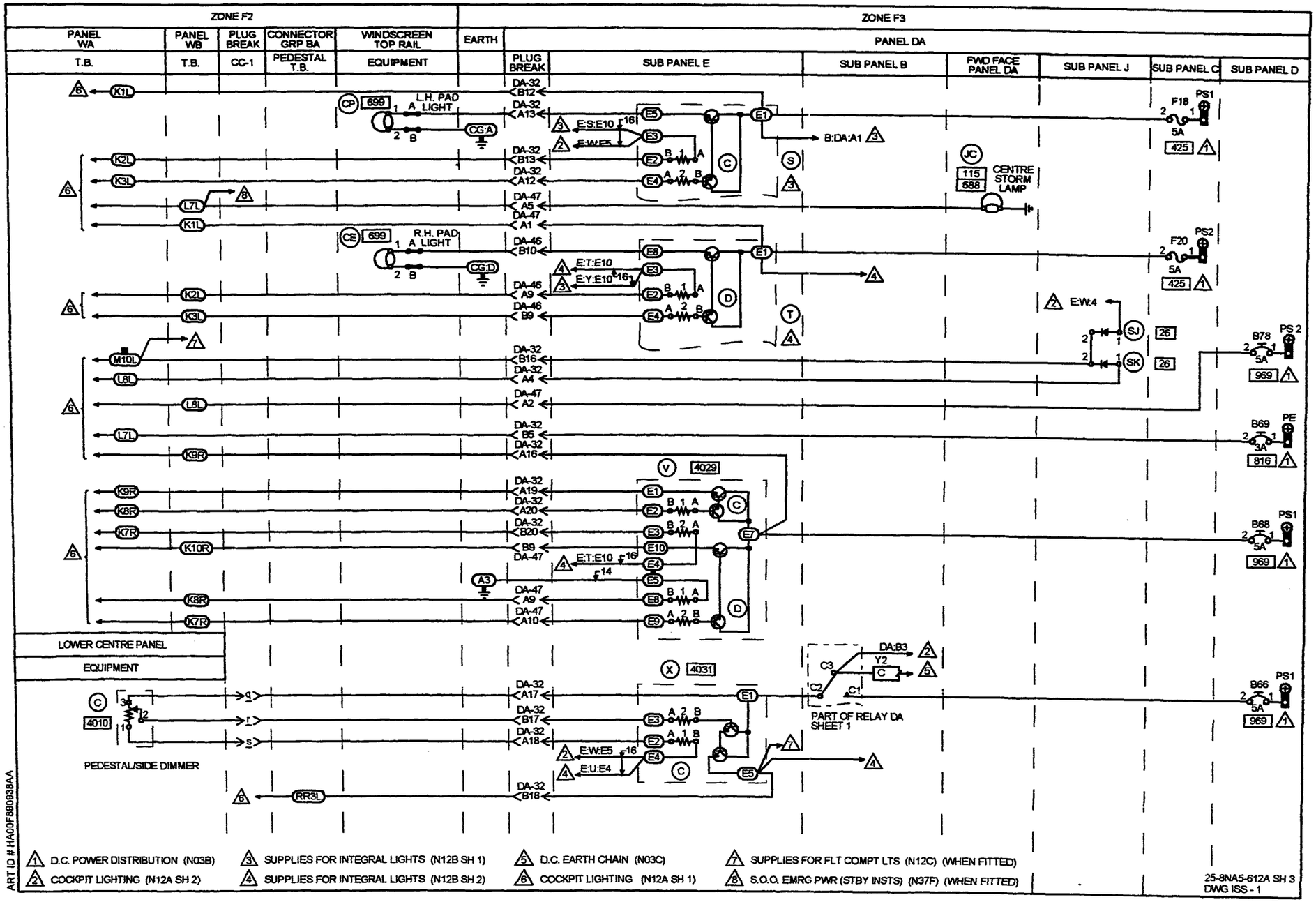
ZONE F2
ZONE F3
PANEL WA
PANEL WB
PLUG BREAK
CONNECTOR GRP BA
WINDSCREEN TOP RAIL
EARTH
PANEL DA
T.B.
T.B.
CC-1
PEDESTAL T.B.
EQUIPMENT
PLUG BREAK
SUB PANEL E
SUB PANEL B
FWD FACE PANEL DA
SUB PANEL J
SUB PANEL C
SUB PANEL D
L.H. PAD LIGHT
R.H. PAD LIGHT
CENTRE STORM LAMP
E:S:E10
E:W:E5
E:T:E10
E:Y:E10
E:W:4
E:U:E4
B:DA:A1
DA:B3
PART OF RELAY DA SHEET 1
LOWER CENTRE PANEL
EQUIPMENT
PEDESTAL/SIDE DIMMER
1 D.C. POWER DISTRIBUTION (N03B)
2 COCKPIT LIGHTING (N12A SH 2)
3 SUPPLIES FOR INTEGRAL LIGHTS (N12B SH 1)
4 SUPPLIES FOR INTEGRAL LIGHTS (N12B SH 2)
5 D.C. EARTH CHAIN (N03C)
6 COCKPIT LIGHTING (N12A SH 1)
7 SUPPLIES FOR FLT COMPT LTS (N12C) (WHEN FITTED)
8 S.O.O. EMRG PWR (STBY INSTS) (N37F) (WHEN FITTED)
25-8NA5-612A SH 3
DWG ISS - 1
ART ID # HA00F8909938AA

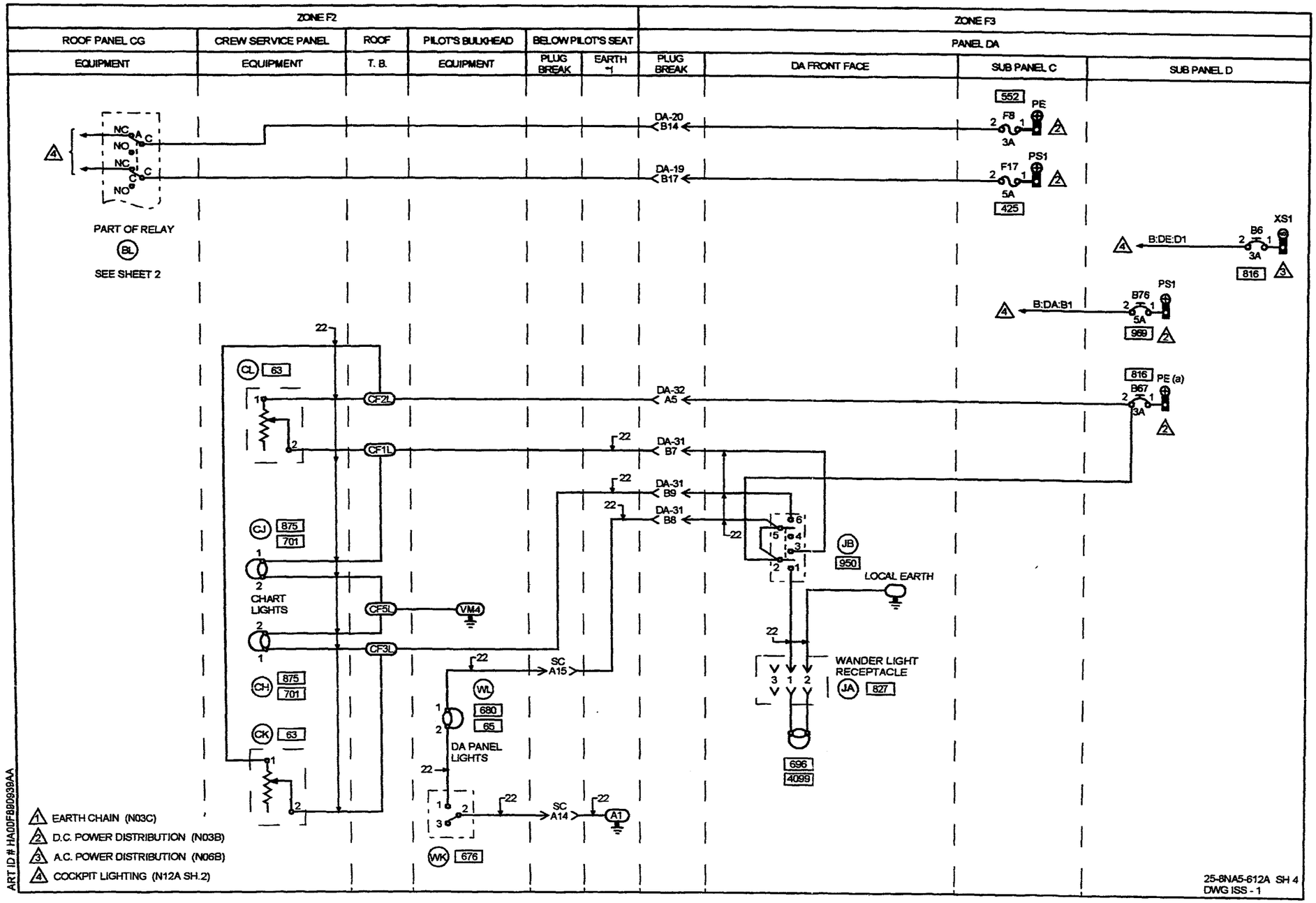
ZONE F2
ZONE F3
ROOF PANEL CG
CREW SERVICE PANEL
ROOF
PILOT'S BULKHEAD
BELOW PILOT'S SEAT
PANEL DA
EQUIPMENT
EQUIPMENT
T. B.
EQUIPMENT
PLUG BREAK
EARTH
PLUG BREAK
DA FRONT FACE
SUB PANEL C
SUB PANEL D
NC
NO
A
C
PART OF RELAY
BL
SEE SHEET 2
552
PE
F8
3A
DA-20
B14
PS1
F17
5A
DA-19
B17
425
XS1
B6
3A
B:DE:D1
816
PS1
B76
5A
B:DA:B1
969
816
PE (a)
B67
3A
DA-32
A5
CL
63
CF2L
CF1L
DA-31
B7
DA-31
B9
DA-31
B8
CJ
875
701
CHART LIGHTS
CF5L
VM4
CF3L
CH
875
701
CK
63
SC
A15
WL
680
65
DA PANEL LIGHTS
SC
A14
A1
WK
676
JB
950
LOCAL EARTH
WANDER LIGHT RECEPTACLE
JA
827
696
4099
EARTH CHAIN (N03C)
D.C. POWER DISTRIBUTION (N03B)
A.C. POWER DISTRIBUTION (N06B)
COCKPIT LIGHTING (N12A SH.2)
ART ID # HA00F8B0939AA
25-8NA5-612A SH 4
DWG ISS - 1

IDENT	PART NUMBER	1234567 NOMENCLATURE	EFFECT FROM TO	UNITS PER ASSY
		COCKPIT LIGHTING	110131 223223 225225 229232 234234 236236 238243 246252	
	25-8NA5-612A	WIRING DIAGRAM- (MOD 253187A)		RF
AA	MBC17	.LAMPHOLDER- (VU0928) (FOR SPARES PROCURE MBC004)		1
AA	MBC004	.LAMP HOLDER- (VU0928) (FOR SPARES PROCURE IN LIEU OF MBC17)		1
AB	MBC17	.LAMPHOLDER- (VU0928) (FOR SPARES PROCURE MBC004)		1
AB	MBC004	.LAMP HOLDER- (VU0928) (FOR SPARES PROCURE IN LIEU OF MBC17)		1
AB1-P	BAEREF000004167	.CONNECTOR-SOCKET (6027-20-16SNCONDD (VK1793))		1
AB1-R	BAEREF000003937	.CONNECTOR-PIN (6026-20-16PNCONDD (VK1793))		1
AC	MBC17	.LAMPHOLDER- (VU0928) (FOR SPARES PROCURE MBC004)		1
AC	MBC004	.LAMP HOLDER- (VU0928) (FOR SPARES PROCURE IN LIEU OF MBC17)		1
AD	MBC17	.LAMPHOLDER- (VU0928) (FOR SPARES PROCURE MBC004)		1
AD	MBC004	.LAMP HOLDER- (VU0928) (FOR SPARES PROCURE IN LIEU OF MBC17)		1
		MISSING ITEM NO. NOT APPLICABLE		

– ITEM NOT ILLUSTRATED

IDENT	PART NUMBER	1234567 NOMENCLATURE	EFFECT FROM TO	UNITS PER ASSY
AE	MBC17	.LAMPHOLDER- (VU0928) (FOR SPARES PROCURE MBC004)		1
AE	MBC004	.LAMP HOLDER- (VU0928) (FOR SPARES PROCURE IN LIEU OF MBC17)		1
AF	MBC17	.LAMPHOLDER- (VU0928) (FOR SPARES PROCURE MBC004)		1
AF	MBC004	.LAMP HOLDER- (VU0928) (FOR SPARES PROCURE IN LIEU OF MBC17)		1
AG	MBC17	.LAMPHOLDER- (VU0928) (FOR SPARES PROCURE MBC004)		1
AG	MBC004	.LAMP HOLDER- (VU0928) (FOR SPARES PROCURE IN LIEU OF MBC17)		1
AH	MBC17	.LAMPHOLDER- (VU0928) (FOR SPARES PROCURE MBC004)		1
AH	MBC004	.LAMP HOLDER- (VU0928) (FOR SPARES PROCURE IN LIEU OF MBC17)		1
AJ	MBC17	.LAMPHOLDER- (VU0928) (FOR SPARES PROCURE MBC004)		1
AJ	MBC004	.LAMP HOLDER- (VU0928) (FOR SPARES PROCURE IN LIEU OF MBC17)		1
AK	MBC17	.LAMPHOLDER- (VU0928) (FOR SPARES PROCURE MBC004)		1
AK	MBC004	.LAMP HOLDER- (VU0928) (FOR SPARES PROCURE IN LIEU OF MBC17)		1
		MISSING ITEM NO. NOT APPLICABLE		

- ITEM NOT ILLUSTRATED

IDENT	PART NUMBER	1234567 NOMENCLATURE	EFFECT FROM TO	UNITS PER ASSY
BA1-P	BAEREF000003205	.CONNECTOR-SOCKET (6027-18-32SNCONDB (VK1793)) (OPT 6027-18-32S (VK4161)) (USED WITH OUTLET: GTR71-18NACS1 (VU0419) (OPT 602GR133-18-1 (VK1100)))		1
BA1-R	BAEREF000003662	.CONNECTOR-PIN (6026-18-32PNCONDB (VK1793))		1
BH-CG	140-4538	.POTENTIOMETER- (VK1021)		1
BK	25-8NF905-1A	.STORM LAMP ASSY (USED WITH: PIN CONNECTOR 6020-8-33PNCONDD SOCKET CONNECTOR 6026-8-33SNCONDD (VK1793))		1
BL	25-8NF905-1A	.STORM LAMP ASSY (USED WITH: PIN CONNECTOR 6020-8-33PNCONDD SOCKET CONNECTOR 6026-8-33SNCONDD (VK1793))		1
BL-CG	99-222	.SWITCH- (V32245) (USED WITH ZENER DIODE: 1N5350B (VK5519))		1
BM-CG	140-4537	.POTENTIOMETER- (VK1021)		1
B6-DAD	483TCG11J25-3A	.CIRCUIT BREAKER-3AMP (VU0091)		1
B66-DAD	483TCG11J25-5A	.CIRCUIT BREAKER-5AMP (VU0091)		1
B67-DAD	483TCG11J25-3A	.CIRCUIT BREAKER-3AMP (VU0091)		1
B68-DAD	483TCG11J25-5A	.CIRCUIT BREAKER-5AMP (VU0091)		1
B69-DAD	483TCG11J25-3A	.CIRCUIT BREAKER-3AMP (VU0091)		1
B76-DAD	483TCG11J25-5A	.CIRCUIT BREAKER-5AMP (VU0091)		1
		MISSING ITEM NO. NOT APPLICABLE		

- ITEM NOT ILLUSTRATED

IDENT	PART NUMBER	1234567 NOMENCLATURE	EFFECT FROM TO	UNITS PER ASSY
B78-DAD	483TCG11J25-5A	.CIRCUIT BREAKER-5AMP (VU0091)		1
C	140-4538	.POTENTIOMETER- (VK1021)		1
C-AB	4-013-01	.DIMMER UNIT-50VA (VK2472) (USED WITH: CONNECTOR SOCKET LS10215R12-12SN CABLE SUPPORT 94002-12 (VK1793))		1
C-S-DAE	BDX67A	.TRANSISTOR- (VK3954) (USED ON 25-8NF405-503A)		2
C-V-DAE	BDX67A	.TRANSISTOR- (VK3954) (USED ON 25-8NF399-503A)		2
C-X-DAE	BDX67A	.TRANSISTOR- (VK3954) (USED ON 25-8NF401-503A)		2
CC1-P	BAEREF000003123	.CONNECTOR-SOCKET (6027-20-41SNCONDB (VK1793)) (USED WITH STRAIN RELIEF: GTR62-20NACS1 (VU0419))		1
CC1-R	6026-20-41P	.CONNECTOR-PLUG (VK4161)		1
CE	25-8NF2921-1A	.LAMP HOLDER		1
CF	WBUN1736D10B	.TERMINAL BLOCK- (VK0574)		1
CG10-P	MTCR161-04P	.CONNECTOR-PIN (VK1010)		1
CG10-R	MTCR101-04S	.CONNECTOR-SOCKET (VK1010)		1
CG6-P	MTC100YH2-009	.SHELL-PLUG (VK1010) (USED WITH WAFERS: TYPE A, MTC100KT2-1101 TYPE B, MTC100KT2-1102)		1
CG6-R	MTC100YH2-010	.SHELL-RECEPTACLE (VK1010) (USED WITH WAFERS: TYPE A, MTC100KT2-1103 TYPE B, MTC100KT2-1104)		1
CH	25NF9557A	.LIGHT UNIT- (OPT 1PD1862-68NS (VK0310))		1
		MISSING ITEM NO. NOT APPLICABLE		

– ITEM NOT ILLUSTRATED

IDENT	PART NUMBER	1234567 NOMENCLATURE	EFFECT FROM TO	UNITS PER ASSY
CJ	25NF9557A	.LIGHT UNIT- (OPT 1PD1862-68NS (VK0310))		1
CK	25DC237-9	.DIMMER SWITCH- (VK0690)		1
CL	25DC237-9	.DIMMER SWITCH- (VK0690)		1
CP	25-8NF2921-1A	.LAMP HOLDER		1
CV	422253-15	.BUNG- (VK1793)		1
CW-A	MBC17	.LAMP HOLDER-EMERGENCY SIDEWALL FLOODLIGHTS (VU0928) (FOR SPARES PROCURE MBC004)		1
CW-A	MBC004	.LAMP HOLDER-EMERGENCY SIDEWALL FLOODLIGHTS (VU0928) (FOR SPARES PROCURE IN LIEU OF MBC17)		1
CW-B	MBC17	.LAMP HOLDER-NORMAL SIDEWALL FLOODLIGHTS (VU0928) (FOR SPARES PROCURE MBC004)		1
CW-B	MBC004	.LAMP HOLDER-NORMAL SIDEWALL FLOODLIGHTS (VU0928) (FOR SPARES PROCURE IN LIEU OF MBC17)		1
CX-A	MBC17	.LAMP HOLDER-EMERGENCY SIDEWALL FLOODLIGHTS (VU0928) (FOR SPARES PROCURE MBC004)		1
CX-A	MBC004	.LAMP HOLDER-EMERGENCY SIDEWALL FLOODLIGHTS (VU0928) (FOR SPARES PROCURE IN LIEU OF MBC17)		1
CX-B	MBC17	.LAMP HOLDER-NORMAL SIDEWALL FLOODLIGHTS (VU0928) (FOR SPARES PROCURE MBC004)		1
		MISSING ITEM NO. NOT APPLICABLE		

– ITEM NOT ILLUSTRATED

IDENT	PART NUMBER	1234567 NOMENCLATURE	EFFECT FROM TO	UNITS PER ASSY
CX-B	MBC004	.LAMP HOLDER-NORMAL SIDEWALL FLOODLIGHTS (VU0928) (FOR SPARES PROCURE IN LIEU OF MBC17)		1
CY1-P	MTC100YH2-009	.SHELL-PLUG (VK1010) (USED WITH WAFERS: TYPE A, MTC100KT2-1103 TYPE B, MTC100KT2-1104)		1
CY1-R	MTC100YH2-010	.SHELL-RECEPTACLE (VK1010) (USED WITH WAFERS: TYPE A, MTC100KT2-1101 TYPE B, MTC100KT2-1102)		1
CY3-P	MTC100YH2-009	.SHELL-PLUG (VK1010) (USED WITH WAFERS: TYPE A, MTC100KT2-1103 TYPE B, MTC100KT2-1104)		1
CY3-R	MTC100YH2-010	.SHELL-RECEPTACLE (VK1010) (USED WITH WAFERS: TYPE A, MTC100KT2-1101 TYPE B, MTC100KT2-1102)		1
CZ-BA	A6795C	.PILLAR LAMP- (VU0231)		1
D-T-DAE	BDX67A	.TRANSISTOR- (VK3954) (USED ON 25-8NF407-503A)		2
D-V-DAE	BDX67A	.TRANSISTOR- (VK3954) (USED ON 25-8NF399-503A)		2
DA-DAB	M400-1265	.RELAY- (VK6265) (USED WITH SOCKET: M12883-40-19 (V81349))		1
DA1-P	MTC100YH1-003	.SHELL-PLUG (VK1010) (USED WITH WAFERS: TYPE A, MTC100KT1-1101 TYPE B, MTC100KT1-1102)		1
DA1-R	MTC100YH1-004	.SHELL-RECEPTACLE (VK1010) (USED WITH WAFERS: TYPE A, MTC100KT1-1103 TYPE B, MTC100KT1-1104)		1
		MISSING ITEM NO. NOT APPLICABLE		

– ITEM NOT ILLUSTRATED

IDENT	PART NUMBER	1234567 NOMENCLATURE	EFFECT FROM TO	UNITS PER ASSY
DA19-P	MTC100YH2-009	.SHELL-PLUG (VK1010) (USED WITH WAFERS: TYPE A, MTC100KT2-1101 TYPE B, MTC100KT2-1102)		1
DA19-R	MTC100YH2-010	.SHELL-RECEPTACLE (VK1010) (USED WITH WAFERS: TYPE A, MTC100KT2-1103 TYPE B, MTC100KT2-1104)		1
DA2-P	MTC100YH1-003	.SHELL-PLUG (VK1010) (USED WITH WAFERS: TYPE A, MTC100KT1-1101 TYPE B, MTC100KT1-1102)		1
DA2-R	MTC100YH1-004	.SHELL-RECEPTACLE (VK1010) (USED WITH WAFERS: TYPE A, MTC100KT1-1103 TYPE B, MTC100KT1-1104)		1
DA20-P	MTC100YH2-009	.SHELL-PLUG (VK1010) (USED WITH WAFERS: TYPE A, MTC100KT2-1101 TYPE B, MTC100KT2-1102)		1
DA20-R	MTC100YH2-010	.SHELL-RECEPTACLE (VK1010) (USED WITH WAFERS: TYPE A, MTC100KT2-1103 TYPE B, MTC100KT2-1104)		1
DA21-P	MTC100YH2-009	.SHELL-PLUG (VK1010) (USED WITH WAFERS: TYPE A, MTC100KT2-1101 TYPE B, MTC100KT2-1102)		1
DA21-R	MTC100YH2-010	.SHELL-RECEPTACLE (VK1010) (USED WITH WAFERS: TYPE A, MTC100KT2-1103 TYPE B, MTC100KT2-1104)		1
DA31-P	MTC100YH2-009	.SHELL-PLUG (VK1010) (USED WITH WAFERS: TYPE A, MTC100KT2-1101 TYPE B, MTC100KT2-1102)		1
DA31-R	MTC100YH2-010	.SHELL-RECEPTACLE (VK1010) (USED WITH WAFERS: TYPE A, MTC100KT2-1103 TYPE B, MTC100KT2-1104)		1
		MISSING ITEM NO. NOT APPLICABLE		

– ITEM NOT ILLUSTRATED

IDENT	PART NUMBER	1234567 NOMENCLATURE	EFFECT FROM TO	UNITS PER ASSY
DA32-P	MTC100YH2-009	.SHELL-PLUG (VK1010) (USED WITH WAFERS: TYPE A, MTC100KT2-1101 TYPE B, MTC100KT2-1102)		1
DA32-R	MTC100YH2-010	.SHELL-RECEPTACLE (VK1010) (USED WITH WAFERS: TYPE A, MTC100KT2-1103 TYPE B, MTC100KT2-1104)		1
DA46-P	MTC100YH1-003	.SHELL-PLUG (VK1010) (USED WITH WAFERS: TYPE A, MTC100KT1-1101 TYPE B, MTC100KT1-1102)		1
DA46-R	MTC100YH1-004	.SHELL-RECEPTACLE (VK1010) (USED WITH WAFERS: TYPE A, MTC100KT1-1103 TYPE B, MTC100KT1-1104)		1
DA47-P	MTC100YH1-003	.SHELL-PLUG (VK1010) (USED WITH WAFERS: TYPE A, MTC100KT1-1101 TYPE B, MTC100KT1-1102)		1
DA47-R	MTC100YH1-004	.SHELL-RECEPTACLE (VK1010) (USED WITH WAFERS: TYPE A, MTC100KT1-1103 TYPE B, MTC100KT1-1104)		1
DA9-P	MTC100YH1-003	.SHELL-PLUG (VK1010) (USED WITH WAFERS: DUMMY A, MTCX1X100-100 TYPE B, MTC100KT1-1102)		1
DA9-R	MTC100YH1-004	.SHELL-RECEPTACLE (VK1010) (USED WITH WAFERS: DUMMY A, MTCX1X100-100 TYPE B, MTC100KT1-1104)		1
DC-DAB	M400-1265	.RELAY- (VK6265) (USED WITH SOCKET: M12883-40-19 (V81349))		1
DE-DAB	M400-1265	.RELAY- (VK6265) (USED WITH SOCKET: M12883-40-19 (V81349))		1
		MISSING ITEM NO. NOT APPLICABLE		

– ITEM NOT ILLUSTRATED

IDENT	PART NUMBER	1234567 NOMENCLATURE	EFFECT FROM TO	UNITS PER ASSY
EG-CG	2132-01-0017	.AMMETER-PITOT (VU1588)		1
E2B	L1338	.FILAMENT-E2B COMPASS LIGHT (VK0673)		1
F-AB	E1250-003	.CAPACITOR- (VK1672)		1
F17-DAC	5920-99-0120076	.FUSE-5AMP (VK0657)		1
F18-DAC	5920-99-0120076	.FUSE-5AMP (VK0657)		1
F20-DAC	5920-99-0120076	.FUSE-5AMP (VK0657)		1
F6-AB	5920-99-0120076	.FUSE-5AMP (VK0657)		1
F8-DAC	5920-99-0120075	.FUSE-3AMP (VK0657)		1
G-AB	E1250-003	.CAPACITOR- (VK1672)		1
J-AB	5905-99-0135979	.RESISTOR- (VK0657)		1
JA-DA	18046D	.WANDER LIGHT- (VK1382)		1
JA-DA-P	SA2025	.3 PIN PLUG- (VU0928)		1
JA-DA-R	SA2026	.3 PIN SOCKET- (VU0948)		1
JB-DA	2TP1-1	.SWITCH- (V91929) (OPT (VK6596))	110116	1
JB-DA	2TP1-1M	.SWITCH- (V91929) (OPT (VK6596))	117131 223223 225225 229232 234234 236236 238243 246252	1
JC-DA	H1800C	.LAMP HOLDER-CENTRE STORM LAMP (VU1974)		1
JP-CG	2132-01-0013	.INDICATOR-AMMETER (UNIT EXCHANGE ITEM) (VU1588)		1
JR-CG	2132-01-0012	.INDICATOR-DC VOLTS (VU1588)		1
JS-CG	2132-01-0013	.INDICATOR-AMMETER (UNIT EXCHANGE ITEM) (VU1588)		1
		MISSING ITEM NO. NOT APPLICABLE		

– ITEM NOT ILLUSTRATED

IDENT	PART NUMBER	1234567 NOMENCLATURE	EFFECT FROM TO	UNITS PER ASSY
JT-CG	2132-01-0014	.VOLTMETER-AC (UNIT EXCHANGE ITEM) (VU1588)		1
K-WA	72444-030-0AV2	.TERMINAL BLOCK- (VK0574)		1
K-WB	72444-030-0AV2	.TERMINAL BLOCK- (VK0574)		1
L-AB	W22-4R7	.RESISTOR- (VK0064)		1
L-WA	72444-030-0AV2	.TERMINAL BLOCK- (VK0574)		1
L-WB	72444-030-0AV2	.TERMINAL BLOCK- (VK0574)		1
M-WA	72444-030-0AV2	.TERMINAL BLOCK- (VK0574)		1
M-WB	72444-030-0AV2	.TERMINAL BLOCK- (VK0574)		1
NP-CG	2132-01-0018	.INDICATOR-DUCT AIR TEMPERATURE (UNIT EXCHANGE ITEM) (VU1588)		1
NR-CG	2132-01-0015	.INDICATOR-CABIN TEMPERATURE (UNIT EXCHANGE ITEM) (VU1588)		1
NS-CG	C52-10	.RECEPTACLE- (V06097)		1
PB-BA	25-8NF3587	.ILLUMINATED PANEL- LABEL	111111 113114 117117 119119 121129 223223 225225 229232 234234 236236 238243 246252	1
PB-BA	25-8NF3583	.ILLUMINATED PANEL- LABEL	110110 112112 115116 118118 120120 130131	1
PH-CG	C52-10	.RECEPTACLE- (V06097)		1
PT-CG	C52-10	.RECEPTACLE- (V06097)		1
		MISSING ITEM NO. NOT APPLICABLE		

– ITEM NOT ILLUSTRATED

IDENT	PART NUMBER	1234567 NOMENCLATURE	EFFECT FROM TO	UNITS PER ASSY
PX-CG	C52-10	.RECEPTACLE- (V06097)		1
RK-BA	A6795C	.PILLAR LAMP- (VU0231)		1
RR-BA	HWBUN1146D10B	.TERMINAL BLOCK- (VK0574)		1
RT-BA	A4896A7-24	.LAMP- (V72914)		1
RU-BA	A6795C	.PILLAR LAMP- (VU0231)		1
S	140-4538	.POTENTIOMETER- (VK1021)		1
S-DAE	25-8NF405-503A	.HEAT SINK ASSY (COMPRISING OF: TRANSISTOR BDX67A (VK3954) RESISTOR 5905-99-0135622 (VK0064) RESISTOR 5905-99-0135626 (VK0064) TERMINAL BLOCK HWBUN1736S10B (VK0574))		1
SC-P	MTC100YH2-009	.SHELL-PLUG (VK1010) (USED WITH WAFERS: TYPE A, MTC100KT2-1103 DUMMY B, MTCX2X200-200)		1
SC-R	MTC100YH2-010	.SHELL-RECEPTACLE (VK1010) (USED WITH WAFERS: TYPE A, MTC100KT2-1101 DUMMY B, MTCX2X200-X200)		1
SJ-DAJ	CV7313	.DIODE- (VK0004)		1
SK-DAJ	CV7313	.DIODE- (VK0004)		1
T	140-4538	.POTENTIOMETER- (VK1021)		1
T-DAE	25-8NF407-503A	.HEAT SINK ASSY (COMPRISING OF: TRANSISTOR BDX67A (VK3954) RESISTOR 5905-99-0135622 (VK0064) RESISTOR 5905-99-0135626 (VK0064) TERMINAL BLOCK HWBUN1736S10B (VK0574))		1
		MISSING ITEM NO. NOT APPLICABLE		

– ITEM NOT ILLUSTRATED

IDENT	PART NUMBER	1234567 NOMENCLATURE	EFFECT FROM TO	UNITS PER ASSY
TA-AB	HWBUN1146D5B	.TERMINAL BLOCK- (VK0574)		1
V	140-4538	.POTENTIOMETER- (VK1021)		1
V-DAE	25-8NF399-503A	.HEAT SINK ASSY (COMPRISING OF: TRANSISTOR BDX67A (VK3954) RESISTOR 5905-99-0135622 (VK0064) RESISTOR 5905-99-0135626 (VK0064) TERMINAL BLOCK HWBUN1736S10B (VK0574))		1
VL-CG	HWBUN1146S10B	.TERMINAL BLOCK- (VK0574)		1
VM-CG	HWBUN1146S10B	.TERMINAL BLOCK- (VK0574)		1
W-DAE	25-8NF403-503A	.HEAT SINK ASSY (COMPRISING OF: TRANSISTOR BDX67A (VK3954) RESISTOR 5905-99-0135622 (VK0064) RESISTOR 5905-99-0135626 (VK0064) TERMINAL BLOCK HWBUN1736S10B (VK0574))		1
WK	1TP1-3	.SWITCH- (VK6596)		1
WL	M2641	.SPOT LAMP- (VU0801)		1
WQ-BA	HWBUN1736D10B	.TERMINAL BLOCK- (VK0574)		1
X	140-4538	.POTENTIOMETER- (VK1021)		1
X-DAE	25-8NF401-503A	.HEAT SINK ASSY (COMPRISING OF: TRANSISTOR BDX67A (VK3954) RESISTOR 5905-99-0135622 (VK0064) RESISTOR 5905-99-0135626 (VK0064) TERMINAL BLOCK HWBUN1736S10B (VK0574))		1
		MISSING ITEM NO. NOT APPLICABLE		

– ITEM NOT ILLUSTRATED

IDENT	PART NUMBER	1234567 NOMENCLATURE	EFFECT FROM TO	UNITS PER ASSY
Y	512TS1-1	.SWITCH- (VK6596)		1
Y2-DAB	MRTB20E04-111	.TERMINAL JUNCTION MODULE- (V14283)		1
Z	512TS1-1	.SWITCH- (VK6596)		1
		MISSING ITEM NO. NOT APPLICABLE		

– ITEM NOT ILLUSTRATED

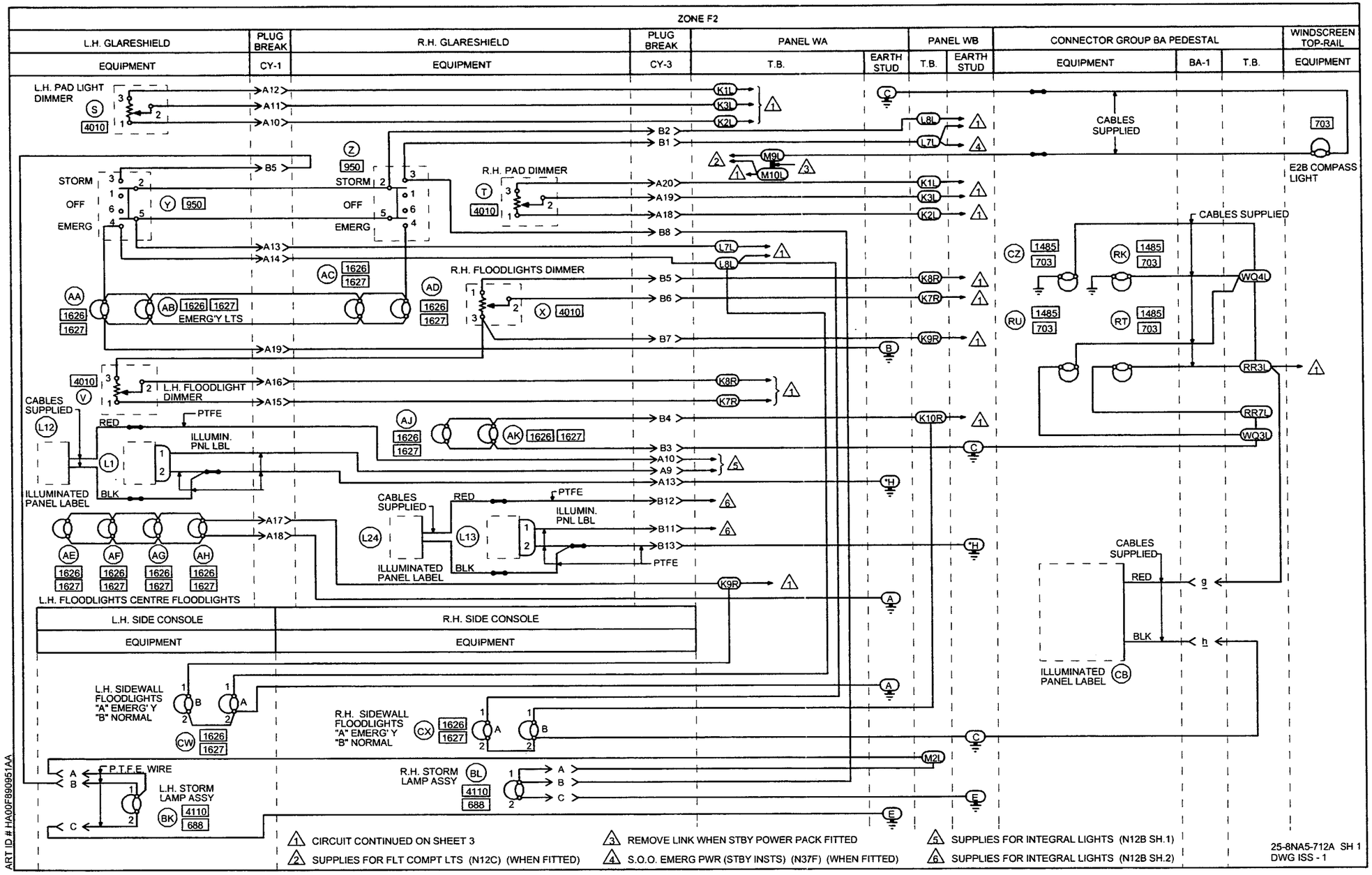

1 CIRCUIT CONTINUED ON SHEET 3
2 SUPPLIES FOR FLT COMPT LTS (N12C) (WHEN FITTED)
3 REMOVE LINK WHEN STBY POWER PACK FITTED
4 S.O.O. EMERG PWR (STBY INSTS) (N37F) (WHEN FITTED)
5 SUPPLIES FOR INTEGRAL LIGHTS (N12B SH.1)
6 SUPPLIES FOR INTEGRAL LIGHTS (N12B SH.2)

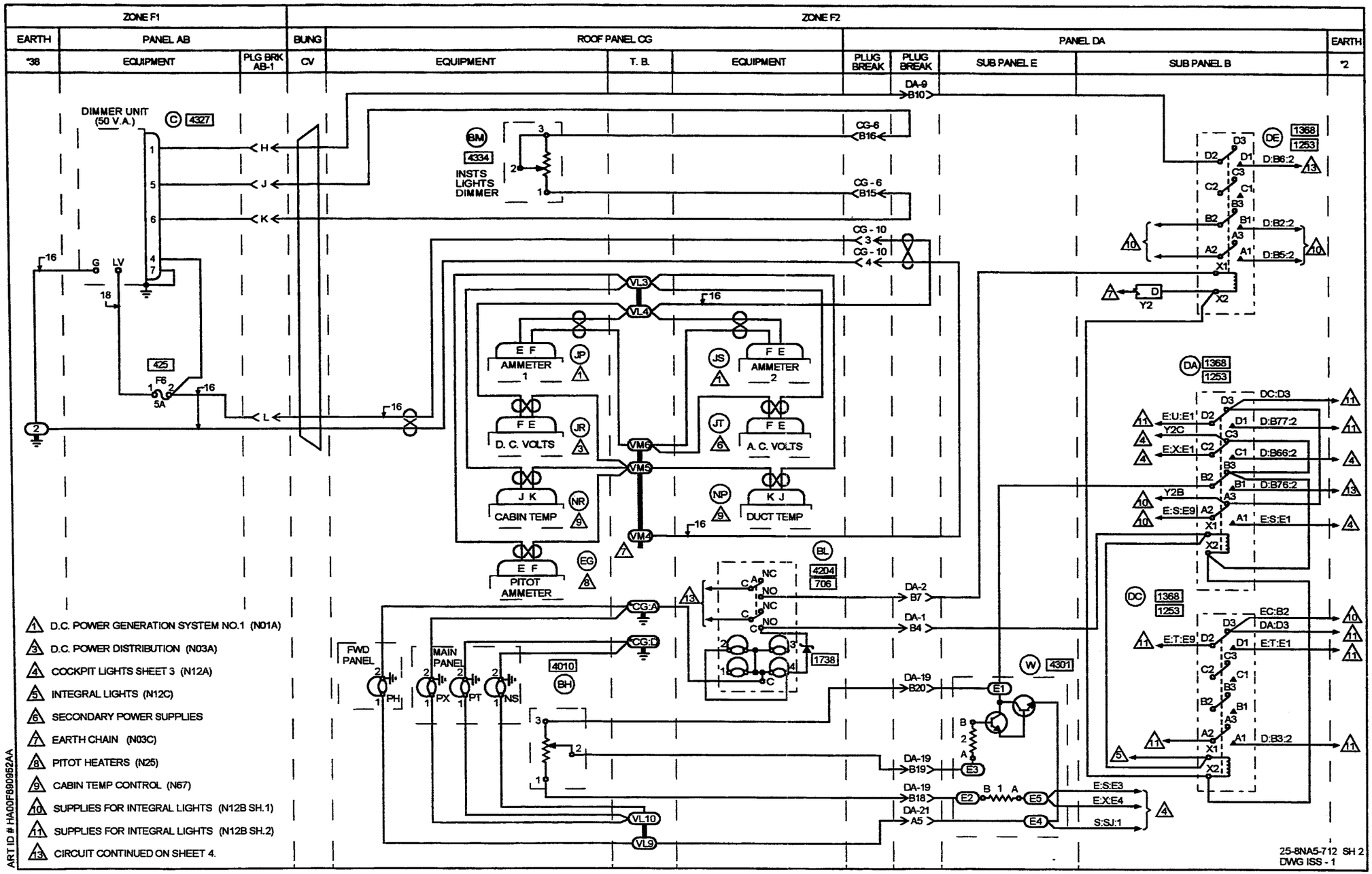
ZONE F1
ZONE F2
EARTH
PANEL AB
BUNG
ROOF PANEL CG
PANEL DA
EARTH
*38
EQUIPMENT
PLG BRK AB-1
CV
EQUIPMENT
T. B.
EQUIPMENT
PLUG BREAK
PLUG BREAK
SUB PANEL E
SUB PANEL B
*2
DIMMER UNIT (50 V.A.)
INSTS LIGHTS DIMMER
AMMETER 1
AMMETER 2
D. C. VOLTS
A. C. VOLTS
CABIN TEMP
DUCT TEMP
PITOT AMMETER
FWD PANEL
MAIN PANEL
1. D.C. POWER GENERATION SYSTEM NO.1 (N01A)
3. D.C. POWER DISTRIBUTION (N03A)
4. COCKPIT LIGHTS SHEET 3 (N12A)
5. INTEGRAL LIGHTS (N12C)
6. SECONDARY POWER SUPPLIES
7. EARTH CHAIN (N03C)
8. PITOT HEATERS (N25)
9. CABIN TEMP CONTROL (N67)
10. SUPPLIES FOR INTEGRAL LIGHTS (N12B SH.1)
11. SUPPLIES FOR INTEGRAL LIGHTS (N12B SH.2)
13. CIRCUIT CONTINUED ON SHEET 4.
ART ID # HA00F890952AA
25-8NA5-712 SH 2
DWG ISS - 1

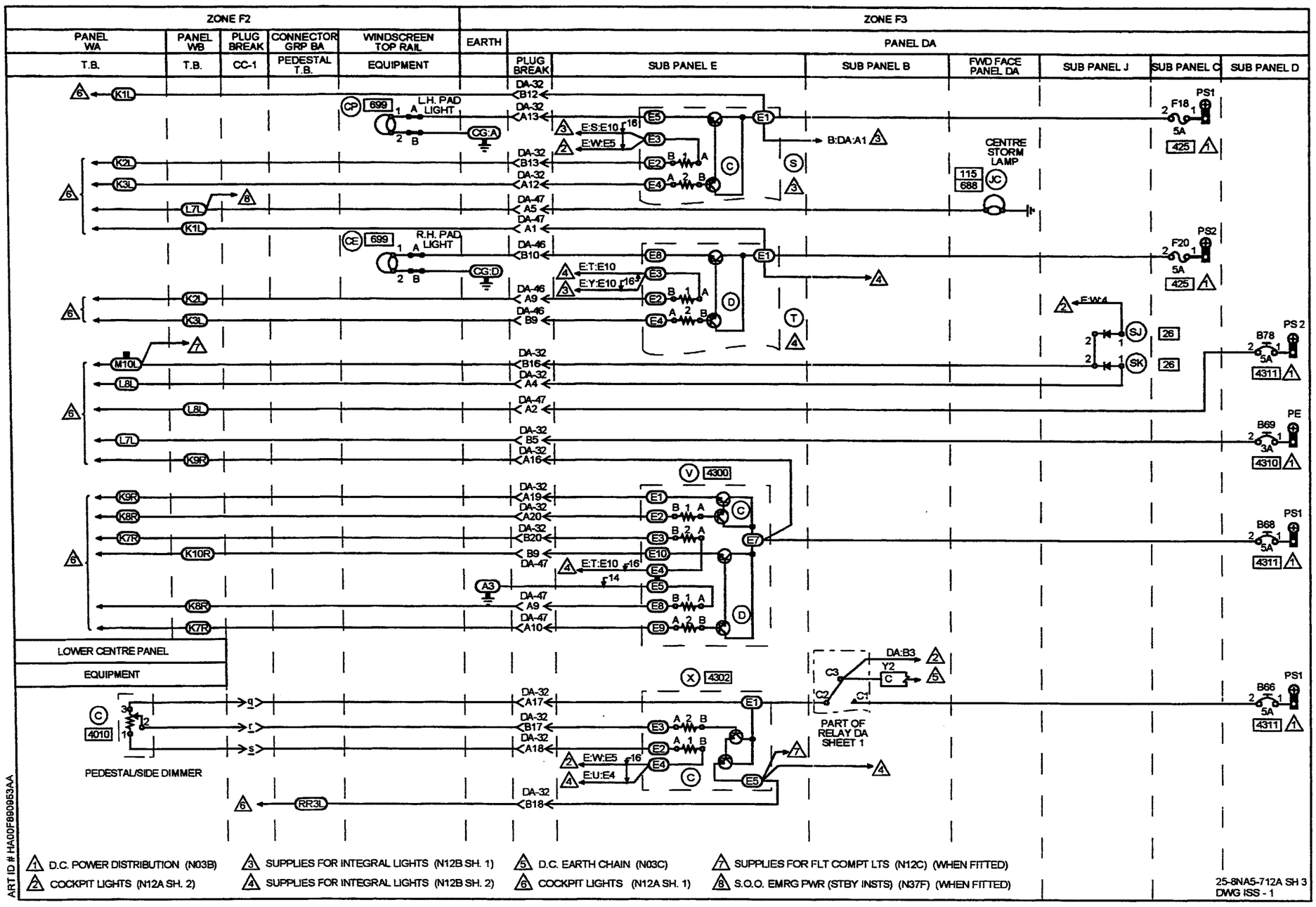
ZONE F2
ZONE F3
PANEL WA
PANEL WB
PLUG BREAK
CONNECTOR GRP BA
WINDSCREEN TOP RAIL
EARTH
PANEL DA
T.B.
T.B.
CC-1
PEDESTAL T.B.
EQUIPMENT
PLUG BREAK
SUB PANEL E
SUB PANEL B
FWD FACE PANEL DA
SUB PANEL J
SUB PANEL C
SUB PANEL D
L.H. PAD LIGHT
R.H. PAD LIGHT
CENTRE STORM LAMP
PS1
PS2
PE
LOWER CENTRE PANEL
EQUIPMENT
PEDESTAL/SIDE DIMMER
PART OF RELAY DA SHEET 1
1 D.C. POWER DISTRIBUTION (N03B)
2 COCKPIT LIGHTS (N12A SH. 2)
3 SUPPLIES FOR INTEGRAL LIGHTS (N12B SH. 1)
4 SUPPLIES FOR INTEGRAL LIGHTS (N12B SH. 2)
5 D.C. EARTH CHAIN (N03C)
6 COCKPIT LIGHTS (N12A SH. 1)
7 SUPPLIES FOR FLT COMPT LTS (N12C) (WHEN FITTED)
8 S.O.O. EMRG PWR (STBY INSTS) (N37F) (WHEN FITTED)
25-8NA5-712A SH 3
DWG ISS - 1
ART ID # HA00F890953AA

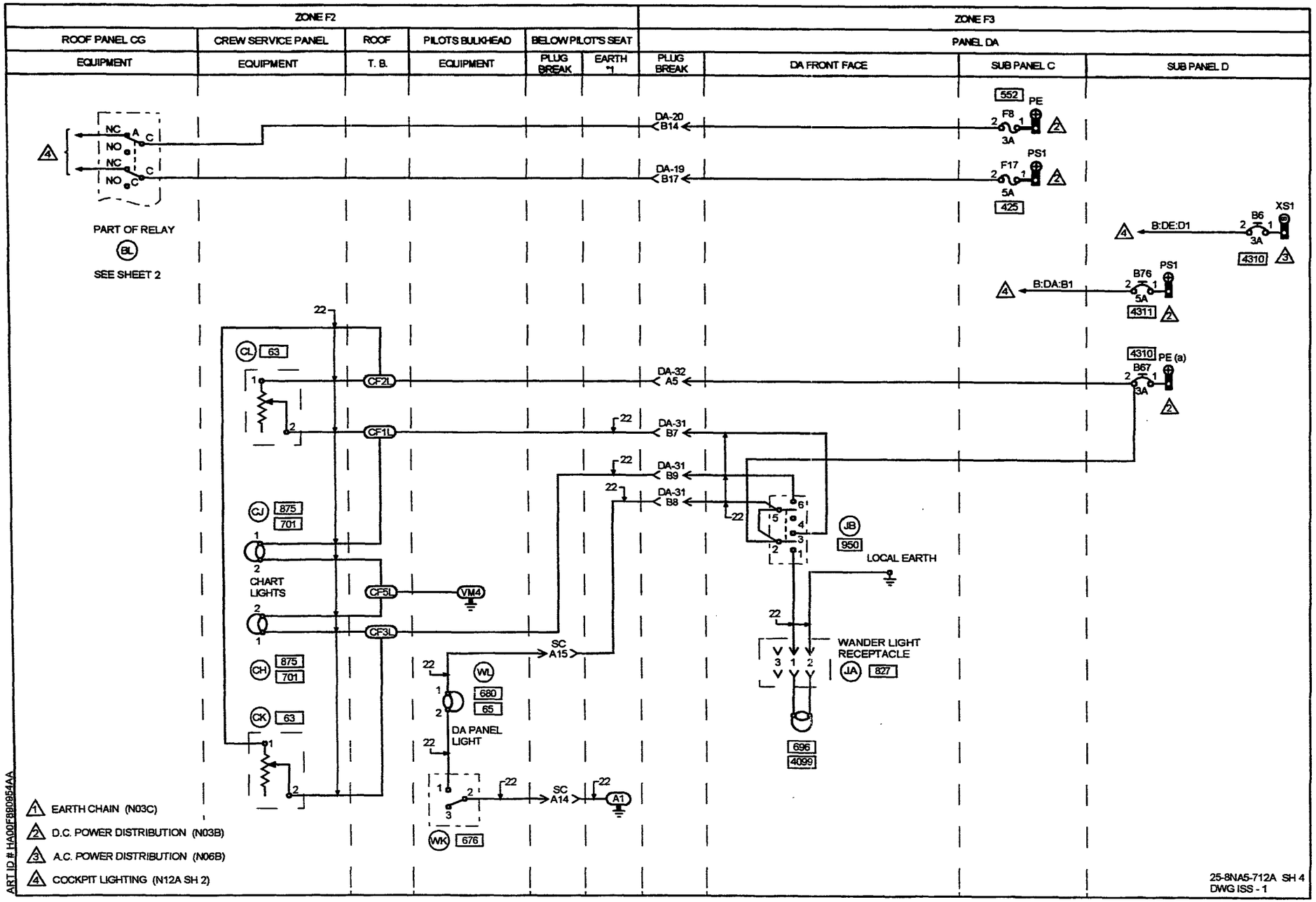
ZONE F2
ZONE F3
ROOF PANEL CG
CREW SERVICE PANEL
ROOF
PILOTS BULKHEAD
BELOW PILOT'S SEAT
PANEL DA
EQUIPMENT
EQUIPMENT
T. B.
EQUIPMENT
PLUG BREAK
EARTH *1
PLUG BREAK
DA FRONT FACE
SUB PANEL C
SUB PANEL D
NC
NO
A
C
PART OF RELAY
BL
SEE SHEET 2
DA-20 B14
DA-19 B17
552
PE
F8
3A
PS1
F17
5A
425
B:DE:D1
B6
XS1
3A
4310
B:DA:B1
B76
PS1
5A
4311
4310
PE (a)
B67
3A
DA-32 A5
DA-31 B7
DA-31 B9
DA-31 B8
CL
63
CF2L
CF1L
CJ
875
701
CHART LIGHTS
CF5L
VM4
CF3L
CH
875
701
CK
63
SC A15
WL
680
65
DA PANEL LIGHT
SC A14
A1
WK
676
JB
950
LOCAL EARTH
WANDER LIGHT RECEPTACLE
JA
827
696
4099
22
EARTH CHAIN (N03C)
D.C. POWER DISTRIBUTION (N03B)
A.C. POWER DISTRIBUTION (N06B)
COCKPIT LIGHTING (N12A SH 2)
ART ID # HA00F8B0954AA
25-8NA5-712A SH 4
DWG ISS - 1

IDENT	PART NUMBER	1234567 NOMENCLATURE	EFFECT FROM TO	UNITS PER ASSY
		COCKPIT LIGHTING	132163 166166 168176	
	25-8NA5-712A	WIRING DIAGRAM- (MOD 253191A)		RF
AA	MBC17	.LAMP HOLDER- (VU0928) (FOR SPARES PROCURE MBC004)		1
AA	MBC004	.LAMP HOLDER- (VU0928) (FOR SPARES PROCURE IN LIEU OF MBC17)		1
AB	MBC17	.LAMP HOLDER- (VU0928) (FOR SPARES PROCURE MBC004)		1
AB	MBC004	.LAMP HOLDER- (VU0928) (FOR SPARES PROCURE IN LIEU OF MBC17)		1
AB1-P	BAEREF000004167	.CONNECTOR-SOCKET (6027-20-16SNCONDD (VK1793))		1
AB1-R	BAEREF000003937	.CONNECTOR-PIN (6026-20-16PNCONDD (VK1793))		1
AC	MBC17	.LAMP HOLDER- (VU0928) (FOR SPARES PROCURE MBC004)		1
AC	MBC004	.LAMP HOLDER- (VU0928) (FOR SPARES PROCURE IN LIEU OF MBC17)		1
AD	MBC17	.LAMP HOLDER- (VU0928) (FOR SPARES PROCURE MBC004)		1
AD	MBC004	.LAMP HOLDER- (VU0928) (FOR SPARES PROCURE IN LIEU OF MBC17)		1
AE	MBC17	.LAMP HOLDER- (VU0928) (FOR SPARES PROCURE MBC004)		1
		MISSING ITEM NO. NOT APPLICABLE		

– ITEM NOT ILLUSTRATED

IDENT	PART NUMBER	1234567 NOMENCLATURE	EFFECT FROM TO	UNITS PER ASSY
AE	MBC004	.LAMP HOLDER- (VU0928) (FOR SPARES PROCURE IN LIEU OF MBC17)		1
AF	MBC17	.LAMP HOLDER- (VU0928) (FOR SPARES PROCURE MBC004)		1
AF	MBC004	.LAMP HOLDER- (VU0928) (FOR SPARES PROCURE IN LIEU OF MBC17)		1
AG	MBC17	.LAMP HOLDER- (VU0928) (FOR SPARES PROCURE MBC004)		1
AG	MBC004	.LAMP HOLDER- (VU0928) (FOR SPARES PROCURE IN LIEU OF MBC17)		1
AH	MBC17	.LAMP HOLDER- (VU0928) (FOR SPARES PROCURE MBC004)		1
AH	MBC004	.LAMP HOLDER- (VU0928) (FOR SPARES PROCURE IN LIEU OF MBC17)		1
AJ	MBC17	.LAMP HOLDER- (VU0928) (FOR SPARES PROCURE MBC004)		1
AJ	MBC004	.LAMP HOLDER- (VU0928) (FOR SPARES PROCURE IN LIEU OF MBC17)		1
AK	MBC17	.LAMP HOLDER- (VU0928) (FOR SPARES PROCURE MBC004)		1
AK	MBC004	.LAMP HOLDER- (VU0928) (FOR SPARES PROCURE IN LIEU OF MBC17)		1
		MISSING ITEM NO. NOT APPLICABLE		

– ITEM NOT ILLUSTRATED

IDENT	PART NUMBER	1234567 NOMENCLATURE	EFFECT FROM TO	UNITS PER ASSY
BA1-P	BAEREF000003205	.CONNECTOR-SOCKET (6027-18-32SNCONDB (VK1793)) (OPT 6027-18-32S (VK4161)) (USED WITH OUTLET: GTR71-18NACS1 (VU0419) (OPT 602GR133-18-1 (VK1100)))		1
BA1-R	BAEREF000003662	.CONNECTOR-PIN (6026-18-32PNCONDB (VK1793))		1
BH-CG	140-4538	.POTENTIOMETER- (VK1021)		1
BK	25-8NF905-1A	.STORM LAMP ASSY (USED WITH: PIN CONNECTOR 6020-8-33PNCONDD SOCKET CONNECTOR 6026-8-33SNCONDD (VK1793))		1
BL	25-8NF905-1A	.STORM LAMP ASSY (USED WITH: PIN CONNECTOR 6020-8-33PNCONDD SOCKET CONNECTOR 6026-8-33SNCONDD (VK1793))		1
BL-CG	99-222	.SWITCH- (V32245) (USED WITH ZENER DIODE: 1N5350B (VK5519))		1
BM-CG	404-8-02811-007	.POTENTIOMETER- (V+2510)		1
B6-DAD	483TCG11J25-3A	.CIRCUIT BREAKER-3AMP (VU0091)		1
B66-DAD	483TCG11J25-5A	.CIRCUIT BREAKER-5AMP (VU0091)		1
B67-DAD	483TCG11J25-3A	.CIRCUIT BREAKER-3AMP (VU0091)		1
B68-DAD	483TCG11J25-5A	.CIRCUIT BREAKER-5AMP (VU0091)		1
B69-DAD	483TCG11J25-3A	.CIRCUIT BREAKER-3AMP (VU0091)		1
B76-DAD	483TCG11J25-5A	.CIRCUIT BREAKER-5AMP (VU0091)		1
		MISSING ITEM NO. NOT APPLICABLE		

– ITEM NOT ILLUSTRATED

IDENT	PART NUMBER	1234567 NOMENCLATURE	EFFECT FROM TO	UNITS PER ASSY
B78-DAD	483TCG11J25-5A	.CIRCUIT BREAKER-5AMP (VU0091)		1
C	140-4538	.POTENTIOMETER- (VK1021)		1
C-AB	D492-04-001	.DIMMER UNIT-50VA (VK0673) (USED WITH: CONNECTOR SOCKET LS10215R12-12SN CABLE SUPPORT 94002-12 (VK1793))		1
C-S-DAE	BDX67A	.TRANSISTOR- (VK3954) (USED ON 25-8NF405-503A)		2
C-V-DAE	BDX67A	.TRANSISTOR- (VK3954) (USED ON 25-8NF399-503A)		2
C-X-DAE	BDX67A	.TRANSISTOR- (VK3954) (USED ON 25-8NF401-503A)		2
CB-BA	25-8NF3669	.ILLUMINATED PANEL- LABEL		1
CC1-P	BAEREF000003123	.CONNECTOR-SOCKET (6027-20-41SNCONDB (VK1793)) (USED WITH STRAIN RELIEF: GTR62-20NACS1 (VU0419))		1
CC1-R	6026-20-41P	.CONNECTOR-PLUG (VK4161)		1
CE	25-8NF2921-1A	.LAMP HOLDER		1
CF	WBUN1736D10B	.TERMINAL BLOCK- (VK0574)		1
CG10-P	MTCR161-04P	.CONNECTOR-PIN (VK1010)		1
CG10-R	MTCR101-04S	.CONNECTOR-SOCKET (VK1010)		1
CG6-P	MTC100YH2-009	.SHELL-PLUG (VK1010) (USED WITH WAFERS: TYPE A, MTC100KT2-1101 TYPE B, MTC100KT2-1102)		1
CG6-R	MTC100YH2-010	.SHELL-RECEPTACLE (VK1010) (USED WITH WAFERS: TYPE A, MTC100KT2-1103 TYPE B, MTC100KT2-1104)		1

MISSING ITEM NO. NOT APPLICABLE

– ITEM NOT ILLUSTRATED

IDENT	PART NUMBER	1234567 NOMENCLATURE	EFFECT FROM TO	UNITS PER ASSY
CH	25NF9557A	.LIGHT UNIT- (OPT 1PD1862-68NS (VK0310))		1
CJ	25NF9557A	.LIGHT UNIT- (OPT 1PD1862-68NS (VK0310))		1
CK	25DC237-9	.DIMMER SWITCH- (VK0690)		1
CL	25DC237-9	.DIMMER SWITCH- (VK0690)		1
CP	25-8NF2921-1A	.LAMP HOLDER		1
CV	422253-15	.BUNG- (VK1793)		1
CW-A	MBC17	.LAMP HOLDER-EMERGENCY SIDEWALL FLOODLIGHTS (VU0928) (FOR SPARES PROCURE MBC004)		1
CW-A	MBC004	.LAMP HOLDER-EMERGENCY SIDEWALL FLOODLIGHTS (VU0928) (FOR SPARES PROCURE IN LIEU OF MBC17)		1
CW-B	MBC17	.LAMP HOLDER-NORMAL SIDEWALL FLOODLIGHTS (VU0928) (FOR SPARES PROCURE MBC004)		1
CW-B	MBC004	.LAMP HOLDER-NORMAL SIDEWALL FLOODLIGHTS (VU0928) (FOR SPARES PROCURE IN LIEU OF MBC17)		1
CX-A	MBC17	.LAMP HOLDER-EMERGENCY SIDEWALL FLOODLIGHTS (VU0928) (FOR SPARES PROCURE MBC004)		1
CX-A	MBC004	.LAMP HOLDER-EMERGENCY SIDEWALL FLOODLIGHTS (VU0928) (FOR SPARES PROCURE IN LIEU OF MBC17)		1
CX-B	MBC17	.LAMP HOLDER-NORMAL SIDEWALL FLOODLIGHTS (VU0928) (FOR SPARES PROCURE MBC004)		1
		MISSING ITEM NO. NOT APPLICABLE		

– ITEM NOT ILLUSTRATED

IDENT	PART NUMBER	1234567 NOMENCLATURE	EFFECT FROM TO	UNITS PER ASSY
CX-B	MBC004	.LAMP HOLDER-NORMAL SIDEWALL FLOODLIGHTS (VU0928) (FOR SPARES PROCURE IN LIEU OF MBC17)		1
CY1-P	MTC100YH2-009	.SHELL-PLUG (VK1010) (USED WITH WAFERS: TYPE A, MTC100KT2-1103 TYPE B, MTC100KT2-1104)		1
CY1-R	MTC100YH2-010	.SHELL-RECEPTACLE (VK1010) (USED WITH WAFERS: TYPE A, MTC100KT2-1101 TYPE B, MTC100KT2-1102)		1
CY3-P	MTC100YH2-009	.SHELL-PLUG (VK1010) (USED WITH WAFERS: TYPE A, MTC100KT2-1103 TYPE B, MTC100KT2-1104)		1
CY3-R	MTC100YH2-010	.SHELL-RECEPTACLE (VK1010) (USED WITH WAFERS: TYPE A, MTC100KT2-1101 TYPE B, MTC100KT2-1102)		1
CZ-BA	A6795C	.PILLAR LAMP- (VU0231)		1
D-T-DAE	BDX67A	.TRANSISTOR- (VK3954) (USED ON 25-8NF407-503A)		2
D-V-DAE	BDX67A	.TRANSISTOR- (VK3954) (USED ON 25-8NF399-503A)		2
DA-DAB	M400-1265	.RELAY- (VK6265) (USED WITH SOCKET: M12883-40-19 (V81349))		1
DA1-P	MTC100YH1-003	.SHELL-PLUG (VK1010) (USED WITH WAFERS: TYPE A, MTC100KT1-1101 TYPE B, MTC100KT1-1102)		1
DA1-R	MTC100YH1-004	.SHELL-RECEPTACLE (VK1010) (USED WITH WAFERS: TYPE A, MTC100KT1-1103 TYPE B, MTC100KT1-1104)		1
		MISSING ITEM NO. NOT APPLICABLE		

– ITEM NOT ILLUSTRATED

IDENT	PART NUMBER	1234567 NOMENCLATURE	EFFECT FROM TO	UNITS PER ASSY
DA19-P	MTC100YH2-009	.SHELL-PLUG (VK1010) (USED WITH WAFERS: TYPE A, MTC100KT2-1101 TYPE B, MTC100KT2-1102)		1
DA19-R	MTC100YH2-010	.SHELL-RECEPTACLE (VK1010) (USED WITH WAFERS: TYPE A, MTC100KT2-1103 TYPE B, MTC100KT2-1104)		1
DA2-P	MTC100YH1-003	.SHELL-PLUG (VK1010) (USED WITH WAFERS: TYPE A, MTC100KT1-1101 TYPE B, MTC100KT1-1102)		1
DA2-R	MTC100YH1-004	.SHELL-RECEPTACLE (VK1010) (USED WITH WAFERS: TYPE A, MTC100KT1-1103 TYPE B, MTC100KT1-1104)		1
DA20-P	MTC100YH2-009	.SHELL-PLUG (VK1010) (USED WITH WAFERS: TYPE A, MTC100KT2-1101 TYPE B, MTC100KT2-1102)		1
DA20-R	MTC100YH2-010	.SHELL-RECEPTACLE (VK1010) (USED WITH WAFERS: TYPE A, MTC100KT2-1103 TYPE B, MTC100KT2-1104)		1
DA21-P	MTC100YH2-009	.SHELL-PLUG (VK1010) (USED WITH WAFERS: TYPE A, MTC100KT2-1101 TYPE B, MTC100KT2-1102)		1
DA21-R	MTC100YH2-010	.SHELL-RECEPTACLE (VK1010) (USED WITH WAFERS: TYPE A, MTC100KT2-1103 TYPE B, MTC100KT2-1104)		1
DA31-P	MTC100YH2-009	.SHELL-PLUG (VK1010) (USED WITH WAFERS: TYPE A, MTC100KT2-1101 TYPE B, MTC100KT2-1102)		1
DA31-R	MTC100YH2-010	.SHELL-RECEPTACLE (VK1010) (USED WITH WAFERS: TYPE A, MTC100KT2-1103 TYPE B, MTC100KT2-1104)		1
		MISSING ITEM NO. NOT APPLICABLE		

– ITEM NOT ILLUSTRATED

IDENT	PART NUMBER	1234567 NOMENCLATURE	EFFECT FROM TO	UNITS PER ASSY
DA32-P	MTC100YH2-009	.SHELL-PLUG (VK1010) (USED WITH WAFERS: TYPE A, MTC100KT2-1101 TYPE B, MTC100KT2-1102)		1
DA32-R	MTC100YH2-010	.SHELL-RECEPTACLE (VK1010) (USED WITH WAFERS: TYPE A, MTC100KT2-1103 TYPE B, MTC100KT2-1104)		1
DA46-P	MTC100YH1-003	.SHELL-PLUG (VK1010) (USED WITH WAFERS: TYPE A, MTC100KT1-1101 TYPE B, MTC100KT1-1102)		1
DA46-R	MTC100YH1-004	.SHELL-RECEPTACLE (VK1010) (USED WITH WAFERS: TYPE A, MTC100KT1-1103 TYPE B, MTC100KT1-1104)		1
DA47-P	MTC100YH1-003	.SHELL-PLUG (VK1010) (USED WITH WAFERS: TYPE A, MTC100KT1-1101 TYPE B, MTC100KT1-1102)		1
DA47-R	MTC100YH1-004	.SHELL-RECEPTACLE (VK1010) (USED WITH WAFERS: TYPE A, MTC100KT1-1103 TYPE B, MTC100KT1-1104)		1
DA9-P	MTC100YH1-003	.SHELL-PLUG (VK1010) (USED WITH WAFERS: TYPE A, MTCX1X100-100 TYPE B, MTC100KT1-1102)		1
DA9-R	MTC100YH1-004	.SHELL-RECEPTACLE (VK1010) (USED WITH WAFERS: TYPE A, MTCX1X100-100 TYPE B, MTC100KT1-1104)		1
DC-DAB	M400-1265	.RELAY- (VK6265) (USED WITH SOCKET: M12883-40-19 (V81349))		1
DE-DAB	M400-1265	.RELAY- (VK6265) (USED WITH SOCKET: M12883-40-19 (V81349))		1
		MISSING ITEM NO. NOT APPLICABLE		

– ITEM NOT ILLUSTRATED

IDENT	PART NUMBER	1234567 NOMENCLATURE	EFFECT FROM TO	UNITS PER ASSY
EG-CG	2132-01-0017	.AMMETER-PITOT (VU1588)		1
E2B	L1338	.FILAMENT-E2B COMPASS LIGHT (VK0673)		1
F17-DAC	5920-99-0120076	.FUSE-5AMP (VK0657)		1
F18-DAC	5920-99-0120076	.FUSE-5AMP (VK0657)		1
F20-DAC	5920-99-0120076	.FUSE-5AMP (VK0657)		1
F6-AB	5920-99-0120076	.FUSE-5AMP (VK0657)		1
F8-DAC	5920-99-0120075	.FUSE-3AMP (VK0657)		1
JA-DA	18046D	.WANDER LIGHT- (VK1382)		1
JA-DA-P	SA2025	.3 PIN PLUG- (VU0928)		1
JA-DA-R	SA2026	.3 PIN SOCKET- (VU0948)		1
JB-DA	2TP1-1M	.SWITCH- (V91929) (OPT (VK6596))		1
JC-DA	H1800C	.LAMP HOLDER- (VU1974)		1
JP-CG	2132-01-0013	.INDICATOR- (UNIT EXCHANGE ITEM) (VU1588)		1
JR-CG	2132-01-0012	.INDICATOR- (VU1588)		1
JS-CG	2132-01-0013	.INDICATOR- (UNIT EXCHANGE ITEM) (VU1588)		1
JT-CG	2132-01-0014	.VOLTMETER-AC (UNIT EXCHANGE ITEM) (VU1588)		1
K-WA	72444-030-0AV2	.TERMINAL BLOCK- (VK0574)		1
K-WB	72444-030-0AV2	.TERMINAL BLOCK- (VK0574)		1
L-WA	72444-030-0AV2	.TERMINAL BLOCK- (VK0574)		1
L-WB	72444-030-0AV2	.TERMINAL BLOCK- (VK0574)		1
L1	25-8MC603-5	.ILLUMINATED PANEL LABEL- (USED WITH CONNECTOR: SCA11108-02 (VU2255))		1
L12	25-8NF615-1A	.ANNUNCIATOR-MWS,LH		1
		MISSING ITEM NO. NOT APPLICABLE		

– ITEM NOT ILLUSTRATED

IDENT	PART NUMBER	1234567 NOMENCLATURE	EFFECT FROM TO	UNITS PER ASSY
L13	25-8MC603-6	.ILLUMINATED PANEL LABEL- (USED WITH CONNECTOR: SCA11108-02 (VU2255))		1
L24	25-8NF615-3A	.ANNUNCIATOR-MWS,RH		1
M-WA	72444-030-0AV2	.TERMINAL BLOCK- (VK0574)		1
M-WB	72444-030-0AV2	.TERMINAL BLOCK- (VK0574)		1
NP-CG	2132-01-0018	.INDICATOR-DUCT AIR TEMPERATURE (UNIT EXCHANGE ITEM) (VU1588)		1
NR-CG	2132-01-0015	.INDICATOR-CABIN TEMPERATURE (UNIT EXCHANGE ITEM) (VU1588)		1
NS-CG	C52-10	.RECEPTACLE- (V06097)		1
PH-CG	C52-10	.RECEPTACLE- (V06097)		1
PT-CG	C52-10	.RECEPTACLE- (V06097)		1
PX-CG	C52-10	.RECEPTACLE- (V06097)		1
RK-BA	A6795C	.PILLAR LAMP- (VU0231)		1
RR-BA	HWBUN1146D10B	.TERMINAL BLOCK- (VK0574)		1
RT-BA	A4896A7-24	.LAMP- (V72914)		1
RU-BA	A6795C	.PILLAR LAMP- (VU0231)		1
S	140-4538	.POTENTIOMETER- (VK1021)		1
S-DAE	25-8NF405-503A	.HEAT SINK ASSY (COMPRISING OF: TRANSISTOR BDX67A (VK3954) RESISTOR 5905-99-0135622 (VK0064) RESISTOR 5905-99-0135626 (VK0064) TERMINAL BLOCK HWBUN1736S10B (VK0574))		1
		MISSING ITEM NO. NOT APPLICABLE		

- ITEM NOT ILLUSTRATED

IDENT	PART NUMBER	1234567 NOMENCLATURE	EFFECT FROM TO	UNITS PER ASSY
SC-P	MTC100YH2-009	.SHELL-PLUG (VK1010) (USED WITH WAFERS: TYPE A, MTC100KT2-1103 DUMMY B, MTCX2X200-200)		1
SC-R	MTC100YH2-010	.SHELL-RECEPTACLE (VK1010) (USED WITH WAFERS: TYPE A, MTC100KT2-1101 DUMMY B, MTCX2X200-X200)		1
SJ-DAJ	CV7313	.DIODE- (VK0004)		1
SK-DAJ	CV7313	.DIODE- (VK0004)		1
T	140-4538	.POTENTIOMETER- (VK1021)		1
T-DAE	25-8NF407-503A	.HEAT SINK ASSY (COMPRISING OF: TRANSISTOR BDX67A (VK3954) RESISTOR 5905-99-0135622 (VK0064) RESISTOR 5905-99-0135626 (VK0064) TERMINAL BLOCK HWBUN1736S10B (VK0574))		1
V	140-4538	.POTENTIOMETER- (VK1021)		1
V-DAE	25-8NF399-503A	.HEAT SINK ASSY (COMPRISING OF: TRANSISTOR BDX67A (VK3954) RESISTOR 5905-99-0135622 (VK0064) RESISTOR 5905-99-0135626 (VK0064) TERMINAL BLOCK HWBUN1736S10B (VK0574))		1
VL-CG	HWBUN1146S10B	.TERMINAL BLOCK- (VK0574)		1
VM-CG	HWBUN1146S10B	.TERMINAL BLOCK- (VK0574)		1
		MISSING ITEM NO. NOT APPLICABLE		

– ITEM NOT ILLUSTRATED

IDENT	PART NUMBER	1234567 NOMENCLATURE	EFFECT FROM TO	UNITS PER ASSY
W-DAE	25-8NF403-503A	.HEAT SINK ASSY (COMPRISING OF: TRANSISTOR BDX67A (VK3954) RESISTOR 5905-99-0135622 (VK0064) RESISTOR 5905-99-0135626 (VK0064) TERMINAL BLOCK HWBUN1736S10B (VK0574))		1
WK	1TP1-3	.SWITCH- (VK6596)		1
WL	M2641	.SPOT LAMP- (VU0801)		1
WQ-BA	HWBUN1736D10B	.TERMINAL BLOCK- (VK0574)		1
X	140-4538	.POTENTIOMETER- (VK1021)		1
X-DAE	25-8NF401-503A	.HEAT SINK ASSY (COMPRISING OF: TRANSISTOR BDX67A (VK3954) RESISTOR 5905-99-0135622 (VK0064) RESISTOR 5905-99-0135626 (VK0064) TERMINAL BLOCK HWBUN1736S10B (VK0574))		1
Y	512TS1-1	.SWITCH- (VK6596)		1
Y2-DAB	MRTB20E04-111	.TERMINAL JUNCTION MODULE- (V14283)		1
Z	512TS1-1	.SWITCH- (VK6596)		1
		MISSING ITEM NO. NOT APPLICABLE		

– ITEM NOT ILLUSTRATED

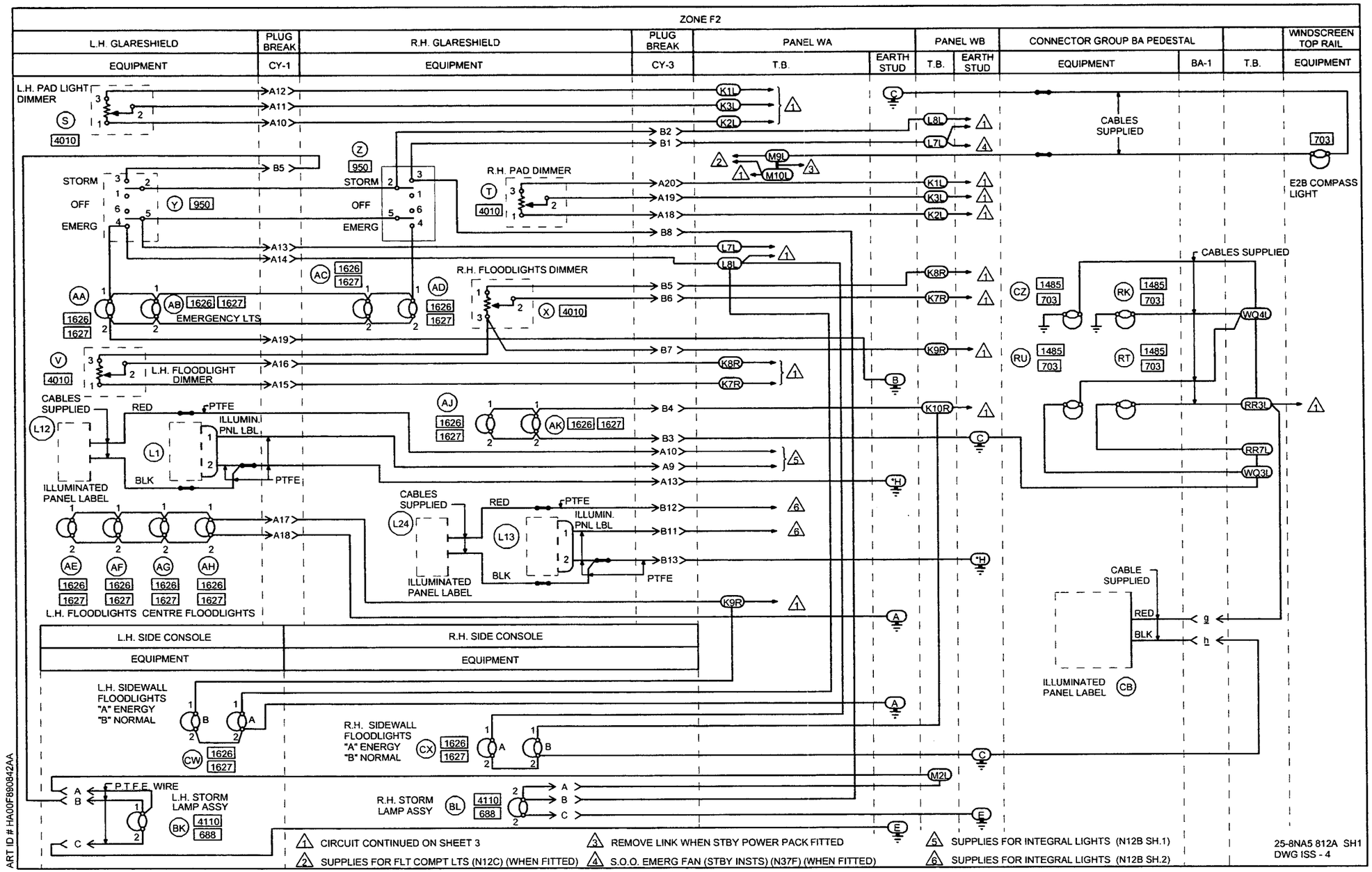
ZONE F2
L.H. GLARESHIELD
EQUIPMENT
PLUG BREAK
CY-1
R.H. GLARESHIELD
EQUIPMENT
PLUG BREAK
CY-3
PANEL WA
T.B.
EARTH STUD
PANEL WB
T.B.
EARTH STUD
CONNECTOR GROUP BA PEDESTAL
EQUIPMENT
BA-1
T.B.
WINDSCREEN TOP RAIL
EQUIPMENT
L.H. PAD LIGHT DIMMER
CABLES SUPPLIED
E2B COMPASS LIGHT
STORM
OFF
EMERG
R.H. PAD DIMMER
R.H. FLOODLIGHTS DIMMER
EMERGENCY LTS
L.H. FLOODLIGHT DIMMER
CABLES SUPPLIED
ILLUMIN. PNL LBL
ILLUMINATED PANEL LABEL
L.H. FLOODLIGHTS
CENTRE FLOODLIGHTS
L.H. SIDE CONSOLE
EQUIPMENT
R.H. SIDE CONSOLE
EQUIPMENT
L.H. SIDEWALL FLOODLIGHTS "A" ENERGY "B" NORMAL
R.H. SIDEWALL FLOODLIGHTS "A" ENERGY "B" NORMAL
P.T.F.E. WIRE
L.H. STORM LAMP ASSY
R.H. STORM LAMP ASSY
CABLE SUPPLIED
ILLUMINATED PANEL LABEL
1 CIRCUIT CONTINUED ON SHEET 3
2 SUPPLIES FOR FLT COMPT LTS (N12C) (WHEN FITTED)
3 REMOVE LINK WHEN STBY POWER PACK FITTED
4 S.O.O. EMERG FAN (STBY INSTS) (N37F) (WHEN FITTED)
5 SUPPLIES FOR INTEGRAL LIGHTS (N12B SH.1)
6 SUPPLIES FOR INTEGRAL LIGHTS (N12B SH.2)
25-8NA5 812A SH1
DWG ISS - 4
ART ID # HA00F890842AA

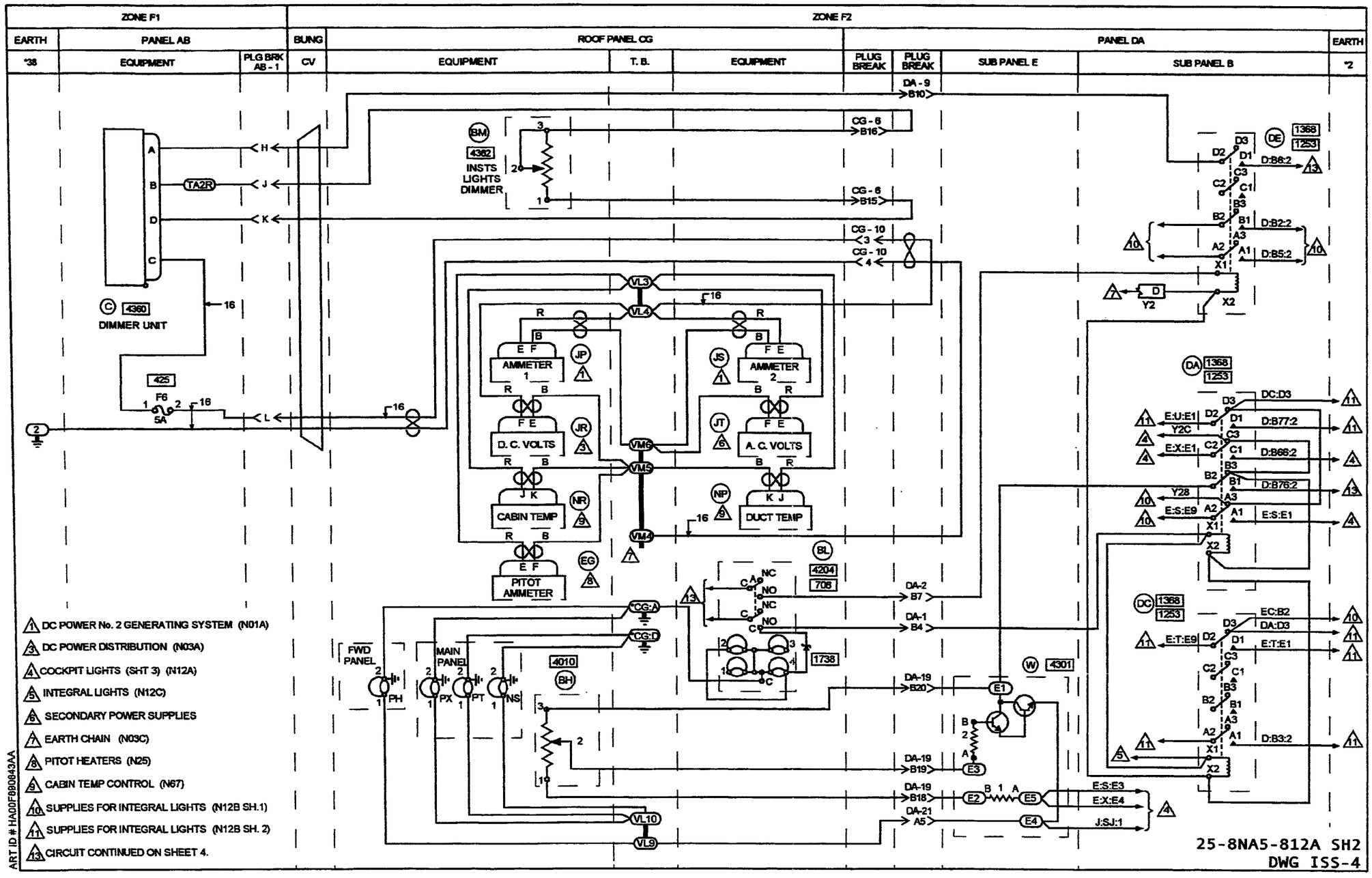
ZONE F1
ZONE F2
EARTH
PANEL AB
BUNG
ROOF PANEL CG
PANEL DA
EARTH
*38
EQUIPMENT
PLG BRK AB - 1
CV
EQUIPMENT
T. B.
EQUIPMENT
PLUG BREAK
PLUG BREAK
SUB PANEL E
SUB PANEL B
*2
DA - 9
B10
CG - 6
B16
CG - 6
B15
CG - 10
CG - 10
TA2R
DIMMER UNIT
INSTS LIGHTS DIMMER
AMMETER 1
AMMETER 2
D. C. VOLTS
A. C. VOLTS
CABIN TEMP
DUCT TEMP
PITOT AMMETER
FWD PANEL
MAIN PANEL
DA-2
B7
DA-1
B4
DA-19
B20
DA-19
B19
DA-19
B18
DA-21
A5
E:S:E3
E:X:E4
J:SJ:1
D:B6:2
D:B2:2
D:B5:2
DC:D3
E:U:E1
D:B77:2
E:X:E1
D:B66:2
D:B76:2
E:S:E9
E:S:E1
EC:B2
DA:D3
E:T:E9
E:T:E1
D:B3:2
1. DC POWER No. 2 GENERATING SYSTEM (N01A)
3. DC POWER DISTRIBUTION (N03A)
4. COCKPIT LIGHTS (SHT 3) (N12A)
5. INTEGRAL LIGHTS (N12C)
6. SECONDARY POWER SUPPLIES
7. EARTH CHAIN (N03C)
8. PITOT HEATERS (N25)
9. CABIN TEMP CONTROL (N67)
10. SUPPLIES FOR INTEGRAL LIGHTS (N12B SH.1)
11. SUPPLIES FOR INTEGRAL LIGHTS (N12B SH. 2)
13. CIRCUIT CONTINUED ON SHEET 4.
ART ID # HA00F890643AA
25-8NA5-812A SH2
DWG ISS-4

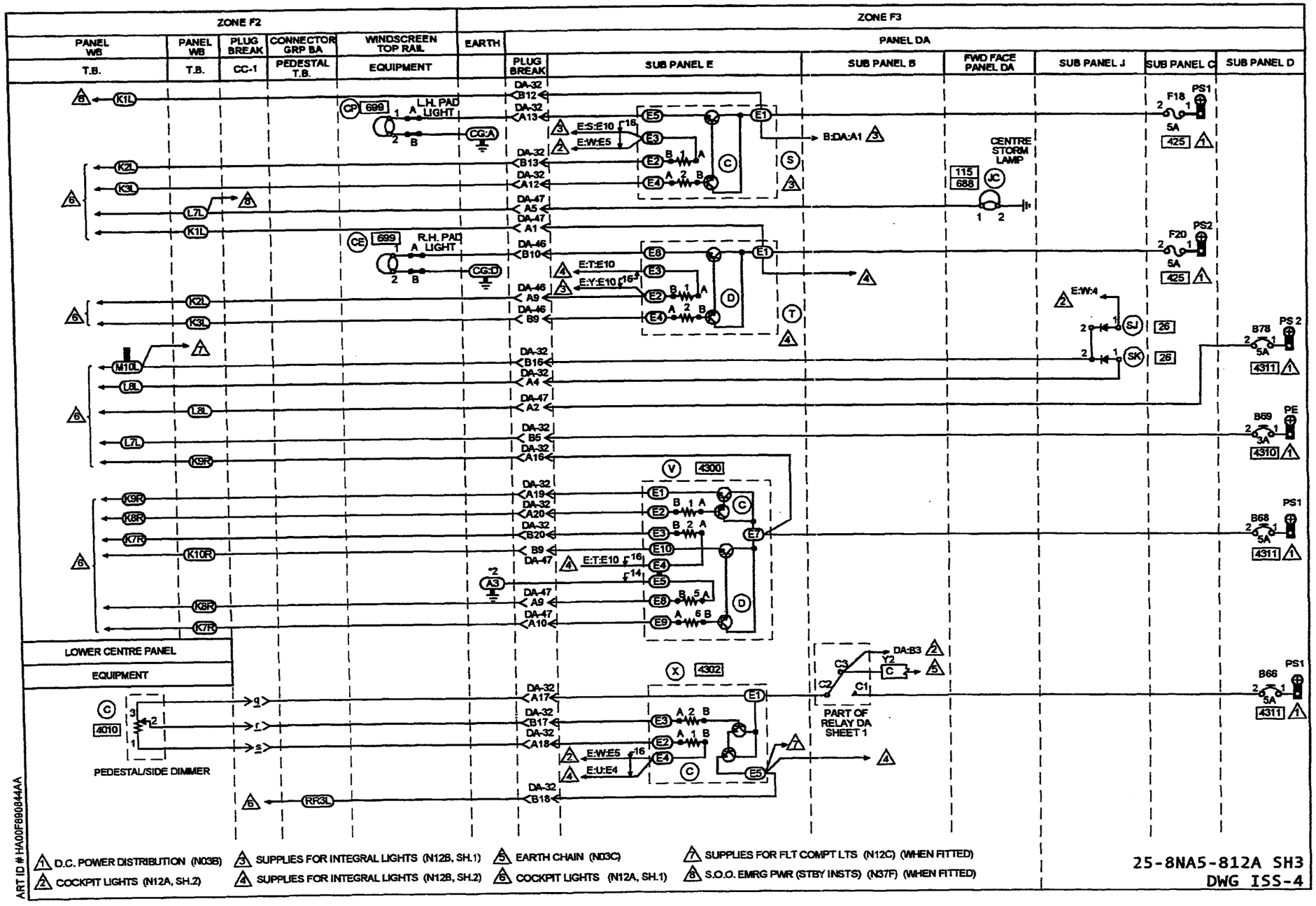
ZONE F2
ZONE F3
PANEL WB
T.B.
PANEL WB
T.B.
PLUG BREAK
CC-1
CONNECTOR GRP BA
PEDESTAL T.B.
WINDSCREEN TOP RAIL
EQUIPMENT
EARTH
PANEL DA
PLUG BREAK
SUB PANEL E
SUB PANEL B
FWD FACE PANEL DA
SUB PANEL J
SUB PANEL C
SUB PANEL D
L.H. PAD LIGHT
R.H. PAD LIGHT
CENTRE STORM LAMP
LOWER CENTRE PANEL
EQUIPMENT
PEDESTAL/SIDE DIMMER
PART OF RELAY DA SHEET 1
1 D.C. POWER DISTRIBUTION (N03B)
2 COCKPIT LIGHTS (N12A, SH.2)
3 SUPPLIES FOR INTEGRAL LIGHTS (N12B, SH.1)
4 SUPPLIES FOR INTEGRAL LIGHTS (N12B, SH.2)
5 EARTH CHAIN (N03C)
6 COCKPIT LIGHTS (N12A, SH.1)
7 SUPPLIES FOR FLT COMPT LTS (N12C) (WHEN FITTED)
8 S.O.O. EMRG PWR (STBY INSTS) (N37F) (WHEN FITTED)
25-8NA5-812A SH3
DWG ISS-4
ART ID # HA00F890844AA

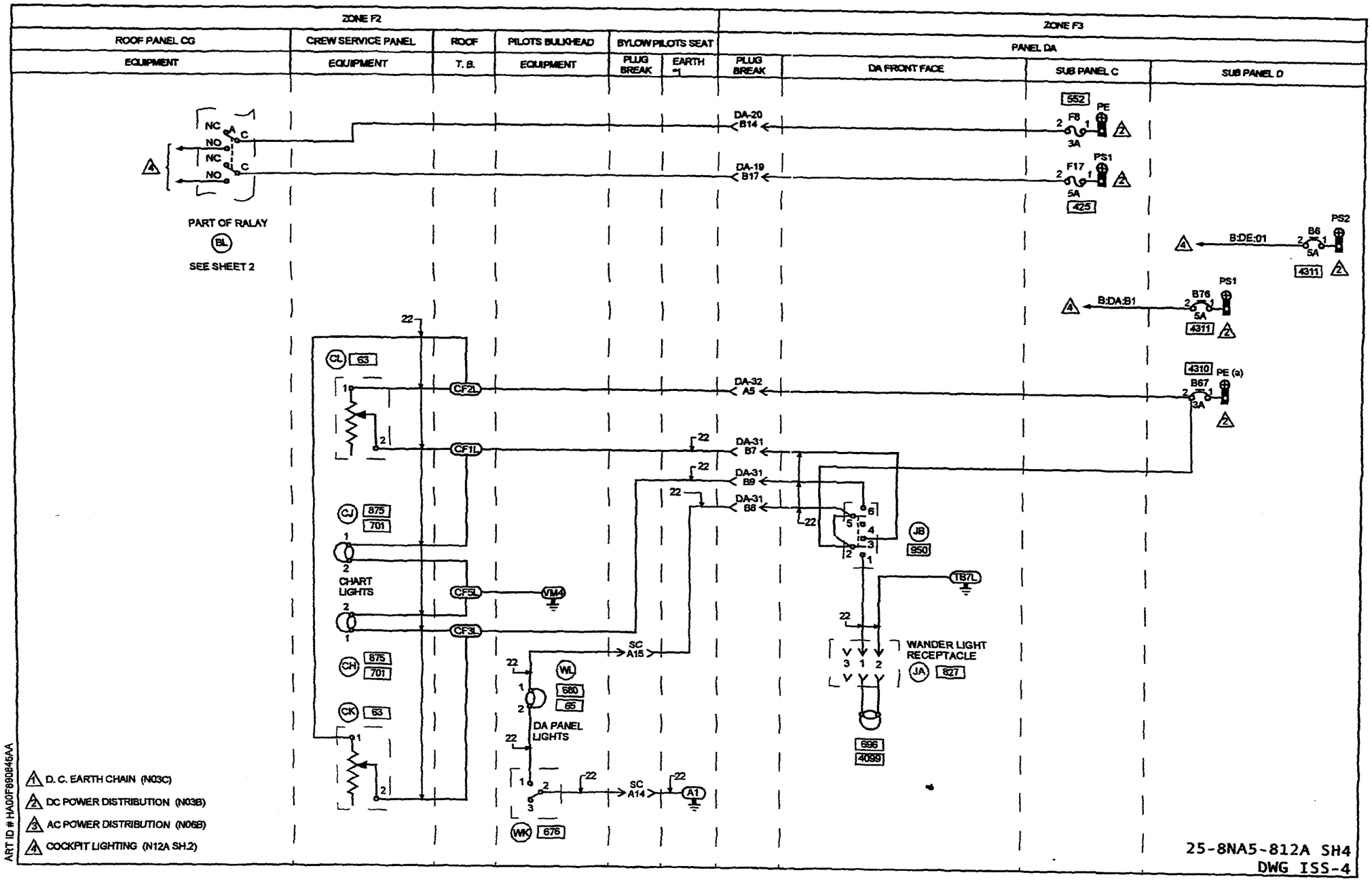
ZONE F2
ZONE F3
ROOF PANEL CG
CREW SERVICE PANEL
ROOF
PILOTS BULKHEAD
BYLOW PILOTS SEAT
PANEL DA
EQUIPMENT
EQUIPMENT
T. B.
EQUIPMENT
PLUG BREAK
EARTH #1
PLUG BREAK
DA FRONT FACE
SUB PANEL C
SUB PANEL D
NC
NO
NC
NO
PART OF RALAY
BL
SEE SHEET 2
DA-20 B14
DA-19 B17
552
F8
3A
PE
F17
5A
PS1
425
PS2
B6
5A
B:DE:01
4311
PS1
B76
5A
B:DA:B1
4311
22
CL
63
CF2L
DA-32 A5
4310
PE (a)
B67
3A
CF1L
DA-31 B7
DA-31 B9
DA-31 B8
CJ
875
701
CHART LIGHTS
CF5L
VM4
CF3L
SC A15
CH
875
701
CK
63
WL
680
65
DA PANEL LIGHTS
WK
676
SC A14
A1
JB
950
TB7L
WANDER LIGHT RECEPTACLE
JA
827
696
4099
D. C. EARTH CHAIN (N03C)
DC POWER DISTRIBUTION (N03B)
AC POWER DISTRIBUTION (N06B)
COCKPIT LIGHTING (N12A SH.2)
ART ID # HA00F880846AA
25-8NA5-812A SH4
DWG ISS-4

IDENT	PART NUMBER	1234567 NOMENCLATURE	EFFECT FROM TO	UNITS PER ASSY
		COCKPIT LIGHTING	164165 167167 177179 181221 244245 253257 259276	
	25-8NA5-812A	WIRING DIAGRAM- (MOD 253247A) (MOD 25F505A)		RF
AA	MBC17	.LAMP HOLDER- (VU0928) (FOR SPARES PROCURE MBC004)		1
AA	MBC004	.LAMP HOLDER- (VU0928) (FOR SPARES PROCURE IN LIEU OF MBC17)		1
AB	MBC17	.LAMP HOLDER- (VU0928) (FOR SPARES PROCURE MBC004)		1
AB	MBC004	.LAMP HOLDER- (VU0928) (FOR SPARES PROCURE IN LIEU OF MBC17)		1
AB1-P	BAEREF000004167	.CONNECTOR-SOCKET (6027-20-16SNCONDD (VK1793))		1
AB1-R	BAEREF000003937	.CONNECTOR-PIN (6026-20-16PNCONDD (VK1793))		1
AC	MBC17	.LAMP HOLDER- (VU0928) (FOR SPARES PROCURE MBC004)		1
AC	MBC004	.LAMP HOLDER- (VU0928) (FOR SPARES PROCURE IN LIEU OF MBC17)		1
AD	MBC17	.LAMP HOLDER- (VU0928) (FOR SPARES PROCURE MBC004)		1
AD	MBC004	.LAMP HOLDER- (VU0928) (FOR SPARES PROCURE IN LIEU OF MBC17)		1
		MISSING ITEM NO. NOT APPLICABLE		

– ITEM NOT ILLUSTRATED

IDENT	PART NUMBER	1234567 NOMENCLATURE	EFFECT FROM TO	UNITS PER ASSY
AE	MBC17	.LAMP HOLDER- (VU0928) (FOR SPARES PROCURE MBC004)		1
AE	MBC004	.LAMP HOLDER- (VU0928) (FOR SPARES PROCURE IN LIEU OF MBC17)		1
AF	MBC17	.LAMP HOLDER- (VU0928) (FOR SPARES PROCURE MBC004)		1
AF	MBC004	.LAMP HOLDER- (VU0928) (FOR SPARES PROCURE IN LIEU OF MBC17)		1
AG	MBC17	.LAMP HOLDER- (VU0928) (FOR SPARES PROCURE MBC004)		1
AG	MBC004	.LAMP HOLDER- (VU0928) (FOR SPARES PROCURE IN LIEU OF MBC17)		1
AH	MBC17	.LAMP HOLDER- (VU0928) (FOR SPARES PROCURE MBC004)		1
AH	MBC004	.LAMP HOLDER- (VU0928) (FOR SPARES PROCURE IN LIEU OF MBC17)		1
AJ	MBC17	.LAMP HOLDER- (VU0928) (FOR SPARES PROCURE MBC004)		1
AJ	MBC004	.LAMP HOLDER- (VU0928) (FOR SPARES PROCURE IN LIEU OF MBC17)		1
AK	MBC17	.LAMP HOLDER- (VU0928) (FOR SPARES PROCURE MBC004)		1
AK	MBC004	.LAMP HOLDER- (VU0928) (FOR SPARES PROCURE IN LIEU OF MBC17)		1
		MISSING ITEM NO. NOT APPLICABLE		

– ITEM NOT ILLUSTRATED

IDENT	PART NUMBER	1234567 NOMENCLATURE	EFFECT FROM TO	UNITS PER ASSY
BA1-P	BAEREF000003205	.CONNECTOR-SOCKET (6027-18-32SNCONDB (VK1793)) (USED WITH OUTLET: GTR71-18NACS1 (VU0419))		1
BA1-R	BAEREF000003662	.CONNECTOR-PIN (6026-18-32PNCONDB (VK1793))		1
BH-CG	140-4538	.POTENTIOMETER- (VK1021)		1
BK	25-8NF905-1A	.STORM LAMP ASSY (USED WITH CONNECTORS: 6026-8-33SNCONDD 6020-8-33PNCONDD (VK1793))		1
BL	25-8NF905-1A	.STORM LAMP ASSY (USED WITH CONNECTORS: 6026-8-33SNCONDD 6020-8-33PNCONDD (VK1793))		1
BL-CG	99-222	.PUSHBUTTON SWITCH- (V32245) (USED WITH ZENER DIODE: 1N5350B (VK5519))		1
BM-CG	140-4538	.POTENTIOMETER- (VK1021)		1
B6-DAD	483TCG11J25-3A	.CIRCUIT BREAKER-3AMP (VU0091)		1
B66-DAD	483TCG11J25-5A	.CIRCUIT BREAKER-5AMP (VU0091)		1
B67-DAD	483TCG11J25-3A	.CIRCUIT BREAKER-3AMP (VU0091)		1
B68-DAD	483TCG11J25-5A	.CIRCUIT BREAKER-5AMP (VU0091)		1
B69-DAD	483TCG11J25-3A	.CIRCUIT BREAKER-3AMP (VU0091)		1
B76-DAD	483TCG11J25-5A	.CIRCUIT BREAKER-5AMP (VU0091)		1
B78-DAD	483TCG11J25-5A	.CIRCUIT BREAKER-5AMP (VU0091)		1
C	140-4538	.POTENTIOMETER- (VK1021)		1
C-AB	LT52A	.DIMMER UNIT- (V16017) (USED WITH CONNECTOR: 6026-14-5SNCONDD (VK1793))		1
		MISSING ITEM NO. NOT APPLICABLE		

– ITEM NOT ILLUSTRATED

IDENT	PART NUMBER	1234567 NOMENCLATURE	EFFECT FROM TO	UNITS PER ASSY
C-S-DAE	BDX67A	.TRANSISTOR- (VK3954)		2
C-V-DAE	BDX67A	.TRANSISTOR- (VK3954)		2
C-X-DAE	BDX67A	.TRANSISTOR- (VK3954)		2
CB-BA	25-8NF3669	.ILLUMINATED PANEL- LABEL		1
CC1-P	BAEREF000003123	.CONNECTOR-SOCKET (6027-20-41SNCONDB (VK1793)) (USED WITH OUTLET: GTR62-20NACS1 (VU0419))		1
CC1-R	6026-20-41P	.CONNECTOR-PLUG (VK4161)		1
CE	25-8NF2921-1A	.LAMP HOLDER		1
CF	WBUN1736D10B	.TERMINAL BLOCK- (VK0574)		1
CG10-P	MTCR161-04P	.CONNECTOR-PIN (VK1010)		1
CG10-R	MTCR101-04S	.CONNECTOR-SOCKET (VK1010)		1
CG6-P	MTC100YH2-009	.SHELL-PLUG (VK1010) (USED WITH WAFERS: TYPE A, MTC100KT2-1101 TYPE B, MTC100KT2-1102)	164165 167167 177179 181221 244245 253254	1
CG6-P	MTC100YH2-009	.SHELL-PLUG (VK1010) (USED WITH INSERTS: PRIMARY MTC100YC1-001 SECONDARY MTC100YC1-002)	255257 259276	1
CG6-R	MTC100YH2-010	.SHELL-RECEPTACLE (VK1010) (USED WITH WAFERS: TYPE A, MTC100KT2-1103 TYPE B, MTC100KT2-1104)	164165 167167 177179 181221 244245 253254	1
CG6-R	MTC100YH2-010	.SHELL-RECEPTACLE (VK1010) (USED WITH INSERTS: PRIMARY MTC100YC1-003 SECONDARY MTC100YC1-004)	255257 259276	1
CH	25NF9557A	.LIGHT UNIT- (OPT 1PD1862-68NS (VK0310))		1

MISSING ITEM NO. NOT APPLICABLE

– ITEM NOT ILLUSTRATED

IDENT	PART NUMBER	1234567 NOMENCLATURE	EFFECT FROM TO	UNITS PER ASSY
CJ	25NF9557A	.LIGHT UNIT- (OPT 1PD1862-68NS (VK0310))		1
CK	25DC237-9	.DIMMER SWITCH- (VK0690)		1
CL	25DC237-9	.DIMMER SWITCH- (VK0690)		1
CP	25-8NF2921-1A	.LAMP HOLDER		1
CV	422253-15	.BUNG- (VK1793)		1
CW-A	MBC17	.LAMP HOLDER-EMERGENCY SIDEWALL FLOODLIGHTS (VU0928) (FOR SPARES PROCURE MBC004)		1
CW-A	MBC004	.LAMP HOLDER-EMERGENCY SIDEWALL FLOODLIGHTS (VU0928) (FOR SPARES PROCURE IN LIEU OF MBC17)		1
CW-B	MBC17	.LAMP HOLDER-NORMAL SIDEWALL FLOODLIGHTS (VU0928) (FOR SPARES PROCURE MBC004)		1
CW-B	MBC004	.LAMP HOLDER-NORMAL SIDEWALL FLOODLIGHTS (VU0928) (FOR SPARES PROCURE IN LIEU OF MBC17)		1
CX-A	MBC17	.LAMP HOLDER-EMERGENCY SIDEWALL FLOODLIGHTS (VU0928) (FOR SPARES PROCURE MBC004)		1
CX-A	MBC004	.LAMP HOLDER-NORMAL SIDEWALL FLOODLIGHTS (VU0928) (FOR SPARES PROCURE IN LIEU OF MBC17)		1
CX-B	MBC17	.LAMP HOLDER-NORMAL SIDEWALL FLOODLIGHTS (VU0928) (FOR SPARES PROCURE MBC004)		1
CX-B	MBC004	.LAMP HOLDER-NORMAL SIDEWALL FLOODLIGHTS (VU0928) (FOR SPARES PROCURE IN LIEU OF MBC17)		1
		MISSING ITEM NO. NOT APPLICABLE		

– ITEM NOT ILLUSTRATED

IDENT	PART NUMBER	1234567 NOMENCLATURE	EFFECT FROM TO	UNITS PER ASSY
CY1-P	MTC100YH2-009	.SHELL-PLUG (VK1010) (USED WITH WAFERS: TYPE A, MTC100KT2-1103 TYPE B, MTC100KT2-1104)	164165 167167 177179 181221 244245 253254	1
CY1-P	MTC100YH2-009	.SHELL-PLUG (VK1010) (USED WITH INSERTS: PRIMARY MTC100YC1-003 SECONDARY MTC100YC1-004)	255257 259276	1
CY1-R	MTC100YH2-010	.SHELL-RECEPTACLE (VK1010) (USED WITH WAFERS: TYPE A, MTC100KT2-1101 TYPE B, MTC100KT2-1102)	164165 167167 177179 181221 244245 253254	1
CY1-R	MTC100YH2-010	.SHELL-RECEPTACLE (VK1010) (USED WITH INSERTS: PRIMARY MTC100YC1-001 SECONDARY MTC100YC1-002)	255257 259276	1
CY3-P	MTC100YH2-009	.SHELL-PLUG (VK1010) (USED WITH WAFERS: TYPE A, MTC100KT2-1103 TYPE B, MTC100KT2-1104)	164165 167167 177179 181221 244245 253254	1
CY3-P	MTC100YH2-009	.SHELL-PLUG (VK1010) (USED WITH INSERTS: PRIMARY MTC100YC1-003 SECONDARY MTC100YC1-004)	255257 259276	1
CY3-R	MTC100YH2-010	.SHELL-RECEPTACLE (VK1010) (USED WITH WAFERS: TYPE A, MTC100KT2-1101 TYPE B, MTC100KT2-1102)	164165 167167 177179 181221 244245 253254	1
CY3-R	MTC100YH2-010	.SHELL-RECEPTACLE (VK1010) (USED WITH INSERTS: PRIMARY MTC100YC1-001 SECONDARY MTC100YC1-002)	255257 259276	1
CZ-BA	A6795C	.PILLAR LAMP- (VU0231)		1
D-T-DAE	BDX67A	.TRANSISTOR- (VK3954)		2
D-V-DAE	BDX67A	.TRANSISTOR- (VK3954)		2
		MISSING ITEM NO. NOT APPLICABLE		

– ITEM NOT ILLUSTRATED

IDENT	PART NUMBER	1234567 NOMENCLATURE	EFFECT FROM TO	UNITS PER ASSY
DA-DAB	M400-1265	.RELAY- (VK6265) (USED WITH SOCKET: M12883-40-19 (V81349))		1
DA1-P	MTC100YH1-003	.SHELL-PLUG (VK1010) (USED WITH WAFERS: TYPE A, MTC100KT1-1101 TYPE B, MTC100KT1-1102)	164165 167167 177179 181221 244245 253254	1
DA1-P	MTC100YH1-003	.SHELL-PLUG (VK1010) (USED WITH INSERT: MTC100YC1-005)	255257 259276	1
DA1-R	MTC100YH1-004	.SHELL-RECEPTACLE (VK1010) (USED WITH WAFERS: TYPE A, MTC100KT1-1103 TYPE B, MTC100KT1-1104)	164165 167167 177179 181221 244245 253254	1
DA1-R	MTC100YH1-004	.SHELL-RECEPTACLE (VK1010) (USED WITH INSERT: MTC100YC1-006)	255257 259276	1
DA19-P	MTC100YH2-009	.SHELL-PLUG (VK1010) (USED WITH WAFERS: TYPE A, MTC100KT2-1101 TYPE B, MTC100KT2-1102)	164165 167167 177179 181221 244245 253254	1
DA19-P	MTC100YH2-009	.SHELL-PLUG (VK1010) (USED WITH INSERTS: PRIMARY MTC100YC1-001 SECONDARY MTC100YC1-002)	255257 259276	1
DA19-R	MTC100YH2-010	.SHELL-RECEPTACLE (VK1010) (USED WITH WAFERS: TYPE A, MTC100KT2-1103 TYPE B, MTC100KT2-1104)	164165 167167 177179 181221 244245 253254	1
DA19-R	MTC100YH2-010	.SHELL-RECEPTACLE (VK1010) (USED WITH INSERTS: PRIMARY MTC100YC1-003 SECONDARY MTC100YC1-004)	255257 259276	1
		MISSING ITEM NO. NOT APPLICABLE		

– ITEM NOT ILLUSTRATED

IDENT	PART NUMBER	1234567 NOMENCLATURE	EFFECT FROM TO	UNITS PER ASSY
DA2-P	MTC100YH1-003	.SHELL-PLUG (VK1010) (USED WITH WAFERS: TYPE A, MTC100KT1-1101 TYPE B, MTC100KT1-1102)	164165 167167 177179 181221 244245 253254	1
DA2-P	MTC100YH1-003	.SHELL-PLUG (VK1010) (USED WITH INSERT: MTC100YC1-005)	255257 259276	1
DA2-R	MTC100YH1-004	.SHELL-RECEPTACLE (VK1010) (USED WITH WAFERS: TYPE A, MTC100KT1-1103 TYPE B, MTC100KT1-1104)	164165 167167 177179 181221 244245 253254	1
DA2-R	MTC100YH1-004	.SHELL-RECEPTACLE (VK1010) (USED WITH INSERT: MTC100YC1-006)	255257 259276	1
DA20-P	MTC100YH2-009	.SHELL-PLUG (VK1010) (USED WITH WAFERS: TYPE A, MTC100KT2-1101 TYPE B, MTC100KT2-1102)	164165 167167 177179 181221 244245 253254	1
DA20-P	MTC100YH2-009	.SHELL-PLUG (VK1010) (USED WITH INSERTS: PRIMARY MTC100YC1-001 SECONDARY MTC100YC1-002)	255257 259276	1
DA20-R	MTC100YH2-010	.SHELL-RECEPTACLE (VK1010) (USED WITH WAFERS: TYPE A, MTC100KT2-1103 TYPE B, MTC100KT2-1104)	164165 167167 177179 181221 244245 253254	1
DA20-R	MTC100YH2-010	.SHELL-RECEPTACLE (VK1010) (USED WITH INSERTS: PRIMARY MTC100YC1-003 SECONDARY MTC100YC1-004)	255257 259276	1
DA21-P	MTC100YH2-009	.SHELL-PLUG (VK1010) (USED WITH WAFERS: TYPE A, MTC100KT2-1101 TYPE B, MTC100KT2-1102)	164165 167167 177179 181221 244245 253254	1

MISSING ITEM NO. NOT APPLICABLE

– ITEM NOT ILLUSTRATED

IDENT	PART NUMBER	1234567 NOMENCLATURE	EFFECT FROM TO	UNITS PER ASSY
DA21-P	MTC100YH2-009	.SHELL-PLUG (VK1010) (USED WITH INSERTS: PRIMARY MTC100YC1-001 SECONDARY MTC100YC1-002)	255257 259276	1
DA21-R	MTC100YH2-010	.SHELL-RECEPTACLE (VK1010) (USED WITH WAFERS: TYPE A, MTC100KT2-1103 TYPE B, MTC100KT2-1104)	164165 167167 177179 181221 244245 253254	1
DA21-R	MTC100YH2-010	.SHELL-RECEPTACLE (VK1010) (USED WITH INSERTS: PRIMARY MTC100YC1-003 SECONDARY MTC100YC1-004)	255257 259276	1
DA31-P	MTC100YH2-009	.SHELL-PLUG (VK1010) (USED WITH WAFERS: TYPE A, MTC100KT2-1101 TYPE B, MTC100KT2-1102)	164165 167167 177179 181221 244245 253254	1
DA31-P	MTC100YH2-009	.SHELL-PLUG (VK1010) (USED WITH INSERTS: PRIMARY MTC100YC1-001 SECONDARY MTC100YC1-002)	255257 259276	1
DA31-R	MTC100YH2-010	.SHELL-RECEPTACLE (VK1010) (USED WITH WAFERS: TYPE A, MTC100KT2-1103 TYPE B, MTC100KT2-1104)	164165 167167 177179 181221 244245 253254	1
DA31-R	MTC100YH2-010	.SHELL-RECEPTACLE (VK1010) (USED WITH INSERTS: PRIMARY MTC100YC1-003 SECONDARY MTC100YC1-004)	255257 259276	1
DA32-P	MTC100YH2-009	.SHELL-PLUG (VK1010) (USED WITH WAFERS: TYPE A, MTC100KT2-1101 TYPE B, MTC100KT2-1102)	164165 167167 177179 181221 244245 253254	1
DA32-P	MTC100YH2-009	.SHELL-PLUG (VK1010) (USED WITH INSERTS: PRIMARY MTC100YC1-001 SECONDARY MTC100YC1-002)	255257 259276	1
		MISSING ITEM NO. NOT APPLICABLE		

– ITEM NOT ILLUSTRATED

IDENT	PART NUMBER	1234567 NOMENCLATURE	EFFECT FROM TO	UNITS PER ASSY
DA32-R	MTC100YH2-010	.SHELL-RECEPTACLE (VK1010) (USED WITH WAFERS: TYPE A, MTC100KT2-1103 TYPE B, MTC100KT2-1104)	164165 167167 177179 181221 244245 253254	1
DA32-R	MTC100YH2-010	.SHELL-RECEPTACLE (VK1010) (USED WITH INSERTS: PRIMARY MTC100YC1-003 SECONDARY MTC100YC1-004)	255257 259276	1
DA46-P	MTC100YH1-003	.SHELL-PLUG (VK1010) (USED WITH WAFERS: TYPE A, MTC100KT1-1101 TYPE B, MTC100KT1-1102)	164165 167167 177179 181221 244245 253254	1
DA46-P	MTC100YH1-003	.SHELL-PLUG (VK1010) (USED WITH INSERT: MTC100YC1-005)	255257 259276	1
DA46-R	MTC100YH1-004	.SHELL-RECEPTACLE (VK1010) (USED WITH WAFERS: TYPE A, MTC100KT1-1103 TYPE B, MTC100KT1-1104)	164165 167167 177179 181221 244245 253254	1
DA46-R	MTC100YH1-004	.SHELL-RECEPTACLE (VK1010) (USED WITH INSERT: MTC100YC1-006)	255257 259276	1
DA47-P	MTC100YH1-003	.SHELL-PLUG (VK1010) (USED WITH WAFERS: TYPE A, MTC100KT1-1101 TYPE B, MTC100KT1-1102)	164165 167167 177179 181221 244245 253254	1
DA47-P	MTC100YH1-003	.SHELL-PLUG (VK1010) (USED WITH INSERT: MTC100YC1-005)	255257 259276	1
DA47-R	MTC100YH1-004	.SHELL-RECEPTACLE (VK1010) (USED WITH WAFERS: TYPE A, MTC100KT1-1103 TYPE B, MTC100KT1-1104)	164165 167167 177179 181221 244245 253254	1
		MISSING ITEM NO. NOT APPLICABLE		

– ITEM NOT ILLUSTRATED

IDENT	PART NUMBER	1234567 NOMENCLATURE	EFFECT FROM TO	UNITS PER ASSY
DA47-R	MTC100YH1-004	.SHELL-RECEPTACLE (VK1010) (USED WITH INSERT: MTC100YC1-006)	255257 259276	1
DA9-P	MTC100YH1-003	.SHELL-PLUG (VK1010) (USED WITH WAFERS: TYPE A, MTCX1X100-100 TYPE B, MTC100KT1-1102)	164165 167167 177179 181221 244245 253254	1
DA9-P	MTC100YH1-003	.SHELL-PLUG (VK1010) (USED WITH INSERT: MTC100YC1-005)	255257 259276	1
DA9-R	MTC100YH1-004	.SHELL-RECEPTACLE (VK1010) (USED WITH WAFERS: TYPE A, MTCX1X100-100 TYPE B, MTC100KT1-1104)	164165 167167 177179 181221 244245 253254	1
DA9-R	MTC100YH1-004	.SHELL-RECEPTACLE (VK1010) (USED WITH INSERT: MTC100YC1-006)	255257 259276	1
DC-DAB	M400-1265	.RELAY- (VK6265) (USED WITH SOCKET: M12883-40-19 (V81349))		1
DE-DAB	M400-1265	.RELAY- (VK6265) (USED WITH SOCKET: M12883-40-19 (V81349))		1
EG-CG	2132-01-0017	.AMMETER-PITOT (VU1588)	164165 167167 177179 181221 244245 253257 259276	1
E2B	L1338	.FILAMENT-E2B COMPASS LIGHT (VK0673)		1
F17-DAC	5920-99-0120076	.FUSE-5AMP (VK0657)		1
F18-DAC	5920-99-0120076	.FUSE-5AMP (VK0657)		1
F20-DAC	5920-99-0120076	.FUSE-5AMP (VK0657)		1
		MISSING ITEM NO. NOT APPLICABLE		

— ITEM NOT ILLUSTRATED

IDENT	PART NUMBER	1234567 NOMENCLATURE	EFFECT FROM TO	UNITS PER ASSY
F6-AB	5920-99-0120076	.FUSE-5AMP (VK0657)		1
F8-DAC	5920-99-0120075	.FUSE-3AMP (VK0657)		1
JA-DA	18046D	.WANDER LIGHT- (VK1382)		1
JA-DA-P	SA2025	.PLUG- (VU0928)		1
JA-DA-R	SA2026	.SOCKET- (VU0948)		1
JB-DA	2TP1-1M	.SWITCH- (V91929) (OPT (VK6596))		1
JC-DA	H1800C	.LAMP HOLDER- (VU1974)		1
JP-CG	2132-01-0013	.INDICATOR- (UNIT EXCHANGE ITEM) (VU1588)		1
JR-CG	2132-01-0012	.INDICATOR- (VU1588)		1
JS-CG	2132-01-0013	.INDICATOR- (UNIT EXCHANGE ITEM) (VU1588)		1
JT-CG	2132-01-0014	.VOLTMETER-AC (UNIT EXCHANGE ITEM) (VU1588)		1
K-WA	72444-030-0AV2	.TERMINAL BLOCK- (VK0574)		1
K-WB	72444-030-0AV2	.TERMINAL BLOCK- (VK0574)		1
L-WA	72444-030-0AV2	.TERMINAL BLOCK- (VK0574)		1
L-WB	72444-030-0AV2	.TERMINAL BLOCK- (VK0574)		1
L1	25-8MC603-5	.ILLUMINATED PANEL LABEL- (USED WITH CONNECTOR: SCA11108-02 (VU2255))		1
L12	25-8NF615-1A	.ANNUNCIATOR-MASTER WARNING SYSTEM,LH		1
L13	25-8MC603-6	.ILLUMINATED PANEL LABEL- (USED WITH CONNECTOR: SCA11108-02 (VU2255))		1
L24	25-8NF615-3A	.ANNUNCIATOR-MASTER WARNING SYSTEM,RH		1
M-WA	72444-030-0AV2	.TERMINAL BLOCK- (VK0574)		1
M-WB	72444-030-0AV2	.TERMINAL BLOCK- (VK0574)		1
		MISSING ITEM NO. NOT APPLICABLE		

- ITEM NOT ILLUSTRATED

IDENT	PART NUMBER	1234567 NOMENCLATURE	EFFECT FROM TO	UNITS PER ASSY
NP-CG	2132-01-0018	.INDICATOR-DUCT AIR TEMPERATURE (UNIT EXCHANGE ITEM) (VU1588)		1
NR-CG	2132-01-0015	.INDICATOR-CABIN TEMPERATURE (UNIT EXCHANGE ITEM) (VU1588)		1
NS-CG	C52-10	.RECEPTACLE- (V06097)		1
PH-CG	C52-10	.RECEPTACLE- (V06097)		1
PT-CG	C52-10	.RECEPTACLE- (V06097)		1
PX-CG	C52-10	.RECEPTACLE- (V06097)		1
RK-BA	A6795C	.PILLAR LAMP- (VU0231)		1
RR-BA	HWBUN1146D10B	.TERMINAL BLOCK- (VK0574)		1
RT-BA	A4896A7-24	.LAMP- (V72914)		1
RU-BA	A6795C	.PILLAR LAMP- (VU0231)		1
S	140-4538	.POTENTIOMETER- (VK1021)		1
S-DAE	25-8NF405-503A	.HEAT SINK ASSY- (COMPRISING OF: TRANSISTOR BDX67A (VK3954) POSITION 1A/1B RESISTOR 5905-99-0135622 POSITION 2A/2B RESISTOR 5905-99-0135626 (VK0064) TERMINAL BLOCK HWBUN1736S10B (VK0574))		1
SC-P	MTC100YH2-009	.SHELL-PLUG (VK1010) (USED WITH WAFERS: TYPE A, MTC100KT2-1103 DUMMY B, MTCX2X200-200)	164165 167167 177179 181221 244245 253254	1
SC-P	MTC100YH2-009	.SHELL-PLUG (VK1010) (USED WITH INSERTS: PRIMARY MTC100YC1-003 SECONDARY MTC100YC1-004)	255257 259276	1
		MISSING ITEM NO. NOT APPLICABLE		

– ITEM NOT ILLUSTRATED

IDENT	PART NUMBER	1234567 NOMENCLATURE	EFFECT FROM TO	UNITS PER ASSY
SC-R	MTC100YH2-010	.SHELL-RECEPTACLE (VK1010) (USED WITH WAFERS: TYPE A, MTC100KT2-1101 DUMMY B, MTCX2X200-X200)	164165 167167 177179 181221 244245 253254	1
SC-R	MTC100YH2-010	.SHELL-RECEPTACLE (VK1010) (USED WITH INSERTS: PRIMARY MTC100YC1-001 SECONDARY MTC100YC1-002)	255257 259276	1
SJ-DAJ	CV7313	.DIODE- (VK0004)		1
SK-DAJ	CV7313	.DIODE- (VK0004)		1
T	140-4538	.POTENTIOMETER- (VK1021)		1
T-DAE	25-8NF407-503A	.HEAT SINK ASSY- (COMPRISING OF: TRANSISTOR BDX67A (VK3954) POSITION 1A/1B RESISTOR 5905-99-0135622 POSITION 2A/2B RESISTOR 5905-99-0135626 (VK0064) TERMINAL BLOCK HWBUN1736S10B (VK0574))		1
TA-AB	HWBUN1146D5B	.TERMINAL BLOCK- (VK0574)		1
V	140-4538	.POTENTIOMETER- (VK1021)		1
V-DAE	25-8NF399-503A	.HEAT SINK ASSY- (COMPRISING OF: TRANSISTOR BDX67A (VK3954) POSITION 1A/1B RESISTOR 5905-99-0135622 POSITION 2A/2B RESISTOR 5905-99-0135626 (VK0064) TERMINAL BLOCK HWBUN1736S10B (VK0574))		1
VL-CG	HWBUN1146S10B	.TERMINAL BLOCK- (VK0574)		1
VM-CG	HWBUN1146S10B	.TERMINAL BLOCK- (VK0574)		1
		MISSING ITEM NO. NOT APPLICABLE		

– ITEM NOT ILLUSTRATED

IDENT	PART NUMBER	1234567 NOMENCLATURE	EFFECT FROM TO	UNITS PER ASSY
W-DAE	25-8NF403-503A	.HEAT SINK ASSY- (COMPRISING OF: TRANSISTOR BDX67A (VK3954) POSITION 1A/1B RESISTOR 5905-99-0135622 POSITION 2A/2B RESISTOR 5905-99-0135626 (VK0064) TERMINAL BLOCK HWBUN1736S10B (VK0574))		1
WK	1TP1-3	.SWITCH- (VK6596)		1
WL	M2641	.SPOT LAMP- (VU0801)		1
WQ-BA	HWBUN1736D10B	.TERMINAL BLOCK- (VK0574)		1
X	140-4538	.POTENTIOMETER- (VK1021)		1
X-DAE	25-8NF401-503A	.HEAT SINK ASSY- (COMPRISING OF: TRANSISTOR BDX67A (VK3954) POSITION 1A/1B RESISTOR 5905-99-0135622 POSITION 2A/2B RESISTOR 5905-99-0135626 (VK0064) TERMINAL BLOCK HWBUN1736S10B (VK0574))		1
Y	512TS1-1	.SWITCH- (VK6596)		1
Y2-DAB	MRTB20E04-111	.TERMINAL JUNCTION MODULE- (V14283)		1
Z	512TS1-1	.SWITCH- (VK6596)		1
		MISSING ITEM NO. NOT APPLICABLE		

– ITEM NOT ILLUSTRATED

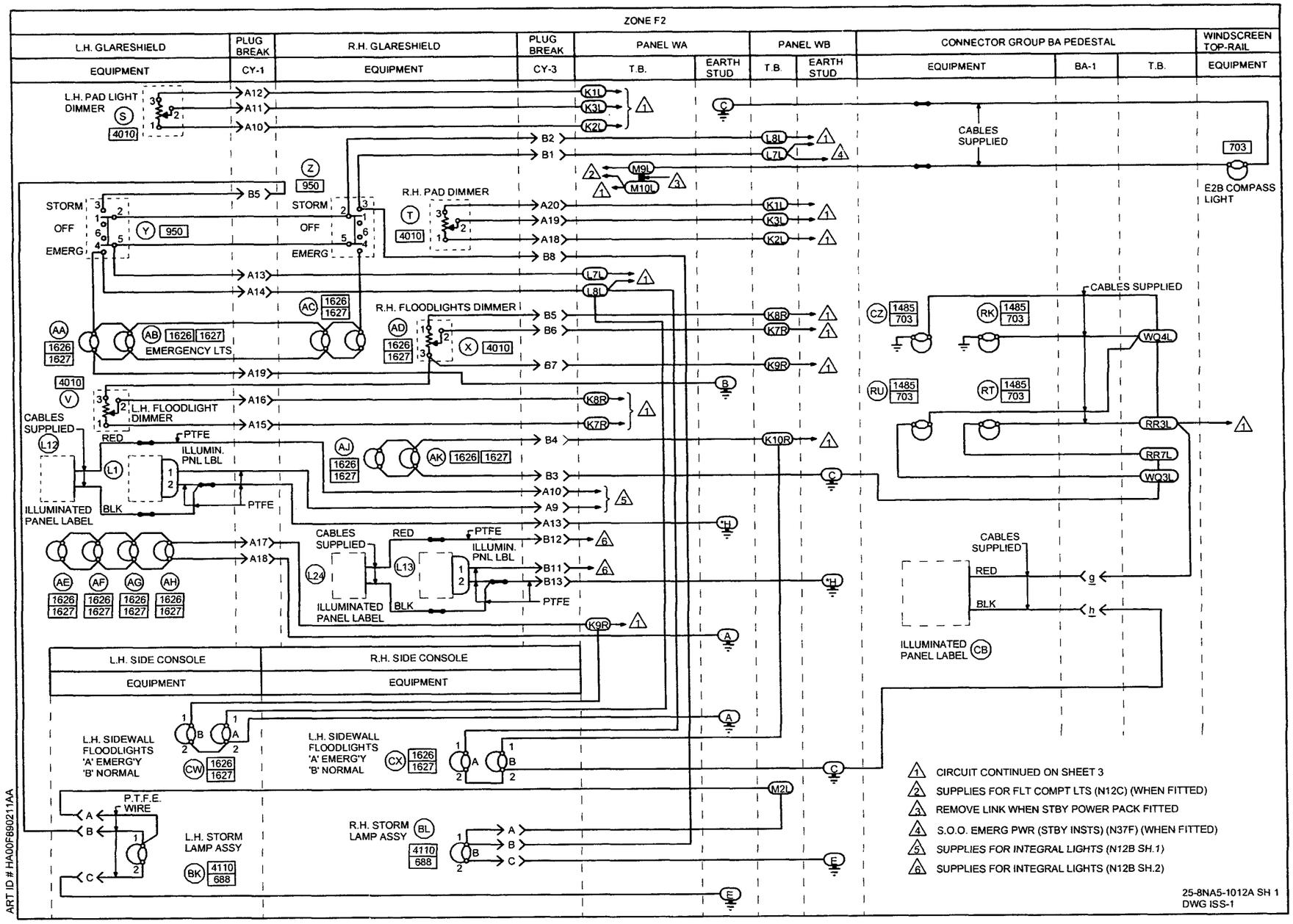
ZONE F2
L.H. GLARESHIELD
PLUG BREAK
R.H. GLARESHIELD
PLUG BREAK
PANEL WA
PANEL WB
CONNECTOR GROUP BA PEDESTAL
WINDSCREEN TOP-RAIL
EQUIPMENT
CY-1
EQUIPMENT
CY-3
T.B.
EARTH STUD
T.B.
EARTH STUD
EQUIPMENT
BA-1
T.B.
EQUIPMENT
L.H. PAD LIGHT DIMMER
CABLES SUPPLIED
E2B COMPASS LIGHT
STORM
OFF
EMERG
R.H. PAD DIMMER
R.H. FLOODLIGHTS DIMMER
EMERGENCY LTS
L.H. FLOODLIGHT DIMMER
CABLES SUPPLIED
ILLUMINATED PANEL LABEL
ILLUMIN. PNL LBL
RED
BLK
PTFE
L.H. SIDE CONSOLE
R.H. SIDE CONSOLE
EQUIPMENT
EQUIPMENT
L.H. SIDEWALL FLOODLIGHTS 'A' EMERG'Y 'B' NORMAL
P.T.F.E. WIRE
L.H. STORM LAMP ASSY
R.H. STORM LAMP ASSY
1 CIRCUIT CONTINUED ON SHEET 3
2 SUPPLIES FOR FLT COMPT LTS (N12C) (WHEN FITTED)
3 REMOVE LINK WHEN STBY POWER PACK FITTED
4 S.O.O. EMERG PWR (STBY INSTS) (N37F) (WHEN FITTED)
5 SUPPLIES FOR INTEGRAL LIGHTS (N12B SH.1)
6 SUPPLIES FOR INTEGRAL LIGHTS (N12B SH.2)
25-8NA5-1012A SH 1
DWG ISS-1
ART ID # HA00F690211AA

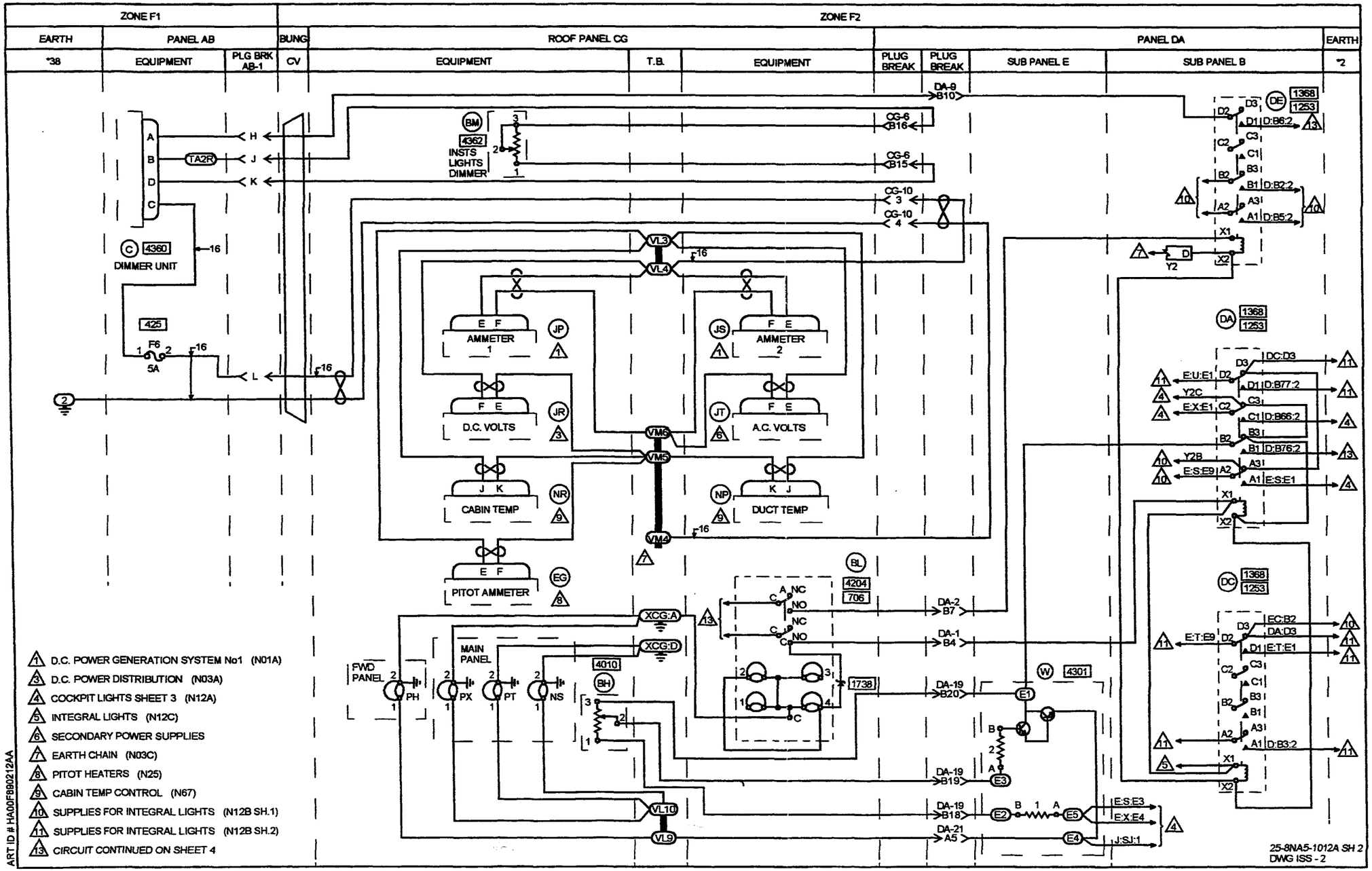
ZONE F1
ZONE F2
EARTH
PANEL AB
BUNG
ROOF PANEL CG
PANEL DA
EARTH
*38
EQUIPMENT
PLG BRK AB-1
CV
EQUIPMENT
T.B.
EQUIPMENT
PLUG BREAK
PLUG BREAK
SUB PANEL E
SUB PANEL B
*2
DIMMER UNIT
INSTS LIGHTS DIMMER
AMMETER 1
AMMETER 2
D.C. VOLTS
A.C. VOLTS
CABIN TEMP
DUCT TEMP
PITOT AMMETER
MAIN PANEL
FWD PANEL
1 D.C. POWER GENERATION SYSTEM No1 (N01A)
3 D.C. POWER DISTRIBUTION (N03A)
4 COCKPIT LIGHTS SHEET 3 (N12A)
5 INTEGRAL LIGHTS (N12C)
6 SECONDARY POWER SUPPLIES
7 EARTH CHAIN (N03C)
8 PITOT HEATERS (N25)
9 CABIN TEMP CONTROL (N67)
10 SUPPLIES FOR INTEGRAL LIGHTS (N12B SH.1)
11 SUPPLIES FOR INTEGRAL LIGHTS (N12B SH.2)
13 CIRCUIT CONTINUED ON SHEET 4
ART ID # HA00F8902212AA
25-8NA5-1012A SH 2
DWG ISS - 2

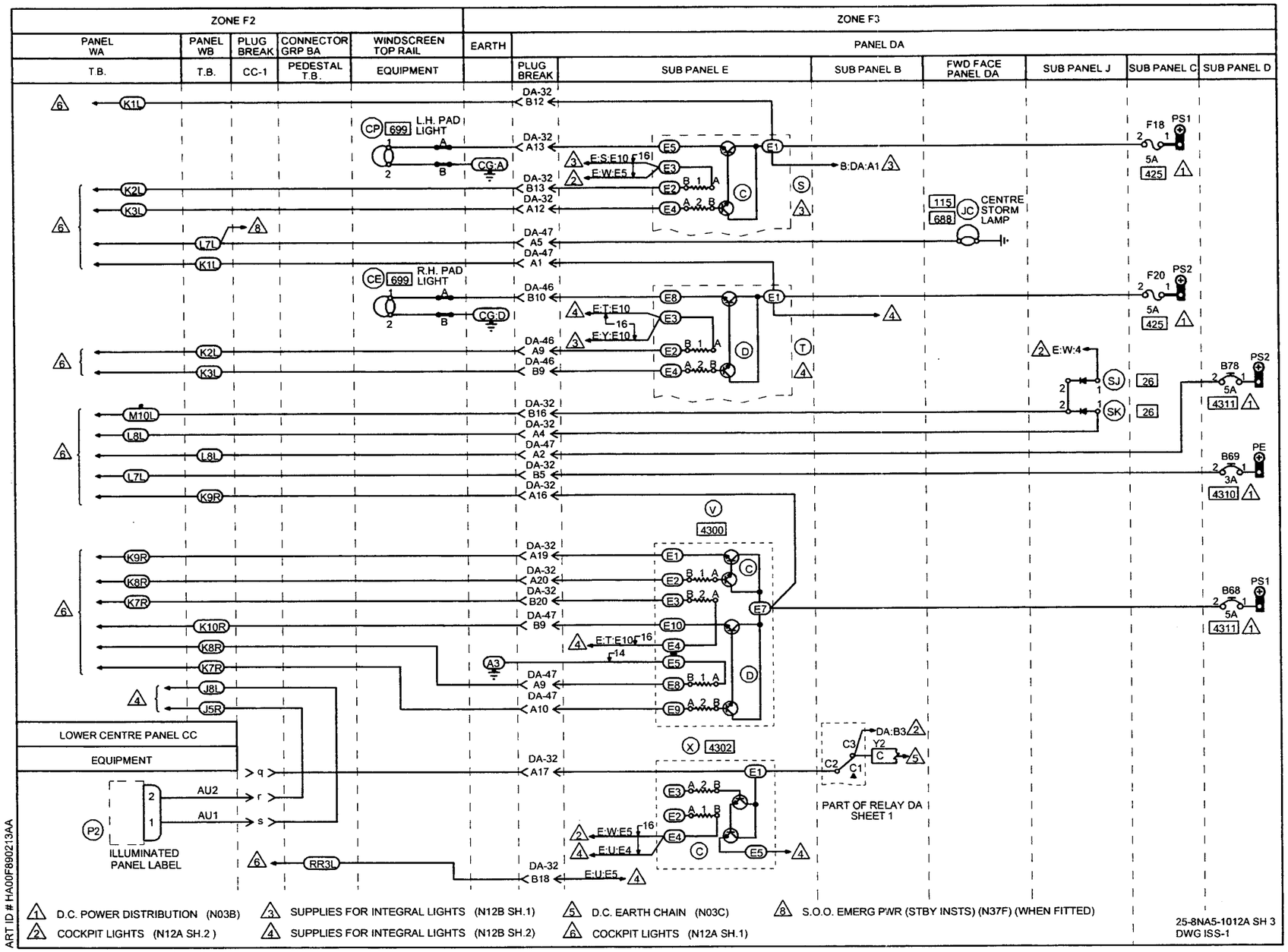
ZONE F2
ZONE F3
PANEL WA
PANEL WB
PLUG BREAK
CONNECTOR GRP BA
WINDSCREEN TOP RAIL
EARTH
PANEL DA
T.B.
T.B.
CC-1
PEDESTAL T.B.
EQUIPMENT
PLUG BREAK
SUB PANEL E
SUB PANEL B
FWD FACE PANEL DA
SUB PANEL J
SUB PANEL C
SUB PANEL D
L.H. PAD LIGHT
R.H. PAD LIGHT
CENTRE STORM LAMP
LOWER CENTRE PANEL CC
EQUIPMENT
ILLUMINATED PANEL LABEL
PART OF RELAY DA SHEET 1
1 D.C. POWER DISTRIBUTION (N03B)
2 COCKPIT LIGHTS (N12A SH.2)
3 SUPPLIES FOR INTEGRAL LIGHTS (N12B SH.1)
4 SUPPLIES FOR INTEGRAL LIGHTS (N12B SH.2)
5 D.C. EARTH CHAIN (N03C)
6 COCKPIT LIGHTS (N12A SH.1)
8 S.O.O. EMERG PWR (STBY INSTS) (N37F) (WHEN FITTED)
25-8NA5-1012A SH 3
DWG ISS-1
ART ID # HA00F890213AA

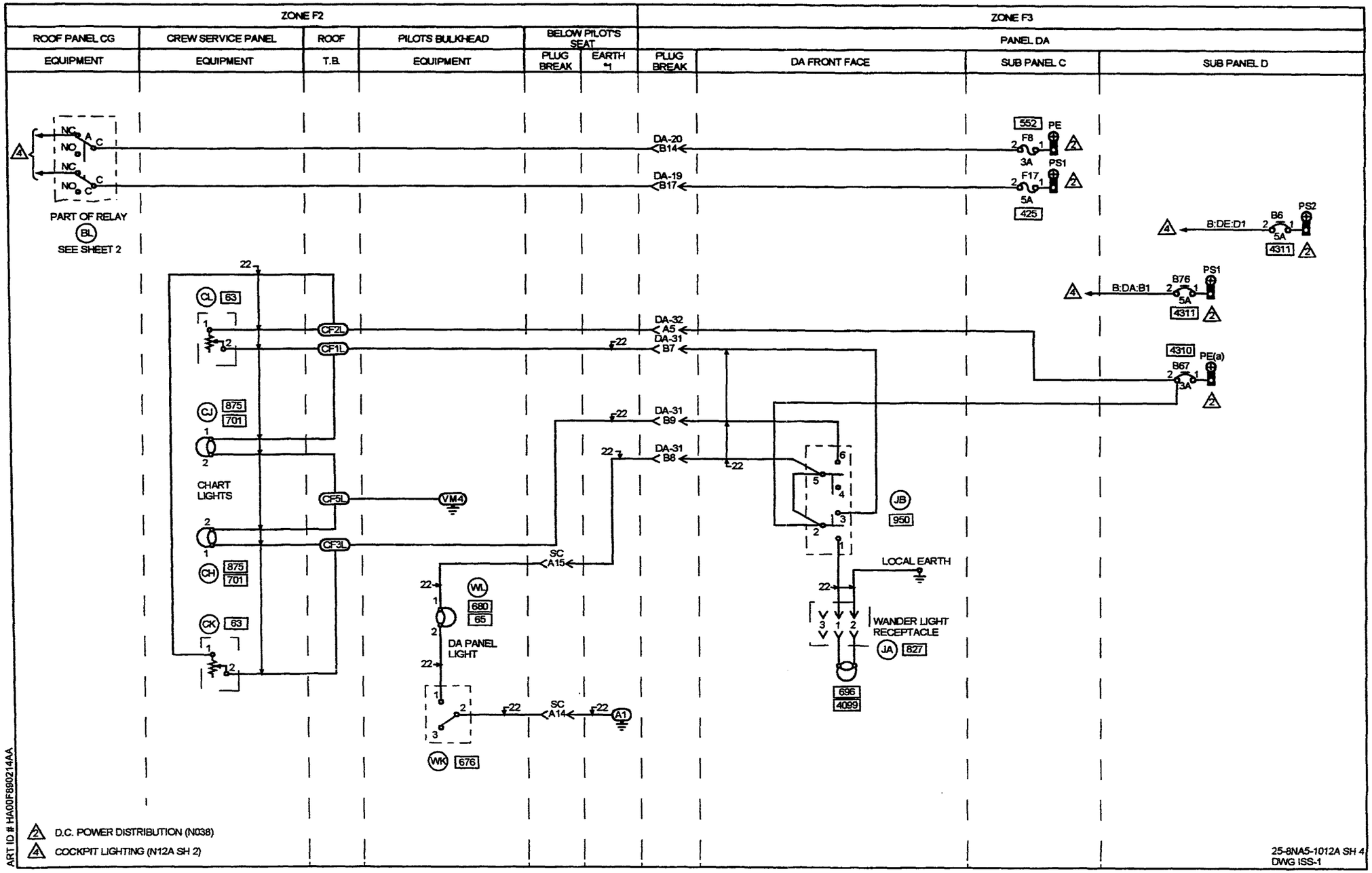
ZONE F2
ZONE F3
ROOF PANEL CG
CREW SERVICE PANEL
ROOF
PILOTS BULKHEAD
BELOW PILOT'S SEAT
PANEL DA
EQUIPMENT
EQUIPMENT
T.B.
EQUIPMENT
PLUG BREAK
EARTH *1
PLUG BREAK
DA FRONT FACE
SUB PANEL C
SUB PANEL D
PART OF RELAY
BL
SEE SHEET 2
DA-20
B14
DA-19
B17
552
PE
F8
3A
PS1
F17
5A
425
B:DE:D1
B6
5A
PS2
4311
B:DA:B1
B76
5A
PS1
4311
DA-32
A5
DA-31
B7
4310
PE(a)
B67
3A
CL
63
CF2L
CF1L
CJ
875
701
CHART LIGHTS
CF5L
VM4
CF3L
CH
875
701
CK
63
DA-31
B9
DA-31
B8
JB
950
SC
A15
WL
680
65
DA PANEL LIGHT
SC
A14
A1
WK
676
LOCAL EARTH
WANDER LIGHT RECEPTACLE
JA
827
696
4099
D.C. POWER DISTRIBUTION (N038)
COCKPIT LIGHTING (N12A SH 2)
ART ID # HA00F890214AA
25-8NA5-1012A SH 4
DWG ISS-1

IDENT	PART NUMBER	1234567 NOMENCLATURE	EFFECT FROM TO	UNITS PER ASSY
		COCKPIT LIGHTING	222222 224224 226228 233233 235235 237237 258258	
	25-8NA5-1012A	WIRING DIAGRAM- (MOD 25A558A)		RF
AA	MBC17	.LAMPHOLDER- (VU0928) (FOR SPARES PROCURE MBC004)		1
AA	MBC004	.LAMP HOLDER- (VU0928) (FOR SPARES PROCURE IN LIEU OF MBC17)		1
AB	MBC17	.LAMPHOLDER- (VU0928) (FOR SPARES PROCURE MBC004)		1
AB	MBC004	.LAMP HOLDER- (VU0928) (FOR SPARES PROCURE IN LIEU OF MBC17)		1
AB1-P	BAEREF000004167	.CONNECTOR-SOCKET (6027-20-16SNCONDD (VK1793))		1
AB1-R	BAEREF000003937	.CONNECTOR-PIN (6026-20-16PNCONDD (VK1793))		1
AC	MBC17	.LAMPHOLDER- (VU0928) (FOR SPARES PROCURE MBC004)		1
AC	MBC004	.LAMP HOLDER- (VU0928) (FOR SPARES PROCURE IN LIEU OF MBC17)		1
AD	MBC17	.LAMPHOLDER- (VU0928) (FOR SPARES PROCURE MBC004)		1
AD	MBC004	.LAMP HOLDER- (VU0928) (FOR SPARES PROCURE IN LIEU OF MBC17)		1
		MISSING ITEM NO. NOT APPLICABLE		

– ITEM NOT ILLUSTRATED

IDENT	PART NUMBER	1234567 NOMENCLATURE	EFFECT FROM TO	UNITS PER ASSY
AE	MBC17	.LAMPHOLDER- (VU0928) (FOR SPARES PROCURE MBC004)		1
AE	MBC004	.LAMP HOLDER- (VU0928) (FOR SPARES PROCURE IN LIEU OF MBC17)		1
AF	MBC17	.LAMPHOLDER- (VU0928) (FOR SPARES PROCURE MBC004)		1
AF	MBC004	.LAMP HOLDER- (VU0928) (FOR SPARES PROCURE IN LIEU OF MBC17)		1
AG	MBC17	.LAMPHOLDER- (VU0928) (FOR SPARES PROCURE MBC004)		1
AG	MBC004	.LAMP HOLDER- (VU0928) (FOR SPARES PROCURE IN LIEU OF MBC17)		1
AH	MBC17	.LAMPHOLDER- (VU0928) (FOR SPARES PROCURE MBC004)		1
AH	MBC004	.LAMP HOLDER- (VU0928) (FOR SPARES PROCURE IN LIEU OF MBC17)		1
AJ	MBC17	.LAMPHOLDER- (VU0928) (FOR SPARES PROCURE MBC004)		1
AJ	MBC004	.LAMP HOLDER- (VU0928) (FOR SPARES PROCURE IN LIEU OF MBC17)		1
AK	MBC17	.LAMPHOLDER- (VU0928) (FOR SPARES PROCURE MBC004)		1
AK	MBC004	.LAMP HOLDER- (VU0928) (FOR SPARES PROCURE IN LIEU OF MBC17)		1
		MISSING ITEM NO. NOT APPLICABLE		

– ITEM NOT ILLUSTRATED

IDENT	PART NUMBER	1234567 NOMENCLATURE	EFFECT FROM TO	UNITS PER ASSY
BA1-P	BAEREF000003205	.CONNECTOR-SOCKET (6027-18-32SNCONDB (VK1793)) (OPT 6027-18-32S (VK4161)) (USED WITH OUTLET: GTR71-18NACS1 (VU0419) (OPT 602GR133-18-1 (VK1100)))		1
BA1-R	BAEREF000003662	.CONNECTOR-PIN (6026-18-32PNCONDB (VK1793))		1
BH-CG	140-4538	.POTENTIOMETER- (VK1021)		1
BK	25-8NF905-1A	.STORM LAMP ASSY (USED WITH: PIN CONNECTOR 6020-8-33PNCONDD SOCKET CONNECTOR 6026-8-33SNCONDD (VK1793))		1
BL	25-8NF905-1A	.STORM LAMP ASSY (USED WITH: PIN CONNECTOR 6020-8-33PNCONDD SOCKET CONNECTOR 6026-8-33SNCONDD (VK1793))		1
BL-CG	99-222	.SWITCH- (V32245) (USED WITH ZENER DIODE: 1N5350B (VK5519))		1
BM-CG	140-4538	.POTENTIOMETER- (VK1021)		1
B6-DAD	483TCG11J25-5A	.CIRCUIT BREAKER-5AMP (VU0091)		1
B67-DAD	483TCG11J25-3A	.CIRCUIT BREAKER-3AMP (VU0091)		1
B68-DAD	483TCG11J25-5A	.CIRCUIT BREAKER-5AMP (VU0091)		1
B69-DAD	483TCG11J25-3A	.CIRCUIT BREAKER-3AMP (VU0091)		1
B76-DAD	483TCG11J25-5A	.CIRCUIT BREAKER-5AMP (VU0091)		1
B78-DAD	483TCG11J25-5A	.CIRCUIT BREAKER-5AMP (VU0091)		1
		MISSING ITEM NO. NOT APPLICABLE		

– ITEM NOT ILLUSTRATED

IDENT	PART NUMBER	1234567 NOMENCLATURE	EFFECT FROM TO	UNITS PER ASSY
C-AB	LT52A	.DIMMER UNIT- (V16017) (USED WITH CONNECTOR SOCKET: 6026-14-5SNCONDD (VK1793) (OPT KPT06B14-5S (V71468)))		1
C-S-DAE	BDX67A	.TRANSISTOR- (VK3954) (USED ON 25-8NF405-503A)		2
C-V-DAE	BDX67A	.TRANSISTOR- (VK3954) (USED ON 25-8NF399-503A)		2
C-X-DAE	BDX67A	.TRANSISTOR- (VK3954) (USED ON 25-8NF401-503A)		2
CB-BA	25-8NF3669	.ILLUMINATED PANEL- LABEL		1
CC1-P	BAEREF000003123	.CONNECTOR-SOCKET (6027-20-41SNCONDB (VK1793)) (USED WITH STRAIN RELIEF: GTR62-20NACS1 (VU0419))		1
CC1-R	6026-20-41P	.CONNECTOR-PLUG (VK4161)		1
CE	25-8NF2921-1A	.LAMP HOLDER		1
CF	WBUN1736D10B	.TERMINAL BLOCK- (VK0574)		1
CG10-P	MTCR161-04P	.CONNECTOR-PIN (VK1010)		1
CG10-R	MTCR101-04S	.CONNECTOR-SOCKET (VK1010)		1
CG6-P	MTC100YH2-009	.SHELL-PLUG (VK1010) (USED WITH WAFERS: TYPE A, MTC100KT2-1101 TYPE B, MTC100KT2-1102)	222222 224224 226228 233233 235235 237237	1
CG6-P	MTC100YH2-009	.SHELL-PLUG (VK1010) (USED WITH INSERTS: PRIMARY MTC100YC1-001 SECONDARY MTC100YC1-002)	258258	1
		MISSING ITEM NO. NOT APPLICABLE		

– ITEM NOT ILLUSTRATED

IDENT	PART NUMBER	1234567 NOMENCLATURE	EFFECT FROM TO	UNITS PER ASSY
CG6-R	MTC100YH2-010	.SHELL-RECEPTACLE (VK1010) (USED WITH WAFERS: TYPE A, MTC100KT2-1103 TYPE B, MTC100KT2-1104)	222222 224224 226228 233233 235235 237237	1
CG6-R	MTC100YH2-010	.SHELL-RECEPTACLE (VK1010) (USED WITH INSERTS: PRIMARY MTC100YC1-003 SECONDARY MTC100YC1-004)	258258	1
CH	25NF9557A	.LIGHT UNIT- (OPT 1PD1862-68NS (VK0310))		1
CJ	25NF9557A	.LIGHT UNIT- (OPT 1PD1862-68NS (VK0310))		1
CK	25DC237-9	.DIMMER SWITCH- (VK0690)		1
CL	25DC237-9	.DIMMER SWITCH- (VK0690)		1
CP	25-8NF2921-1A	.LAMP HOLDER		1
CV	422253-15	.BUNG- (VK1793)		1
CW-A	MBC17	.LAMPHOLDER-EMERGENCY SIDEWALL FLOODLIGHTS (VU0928) (FOR SPARES PROCURE MBC004)		1
CW-A	MBC004	.LAMP HOLDER-EMERGENCY SIDEWALL FLOODLIGHTS (VU0928) (FOR SPARES PROCURE IN LIEU OF MBC17)		1
CW-B	MBC17	.LAMPHOLDER-NORMAL SIDEWALL FLOODLIGHTS (VU0928) (FOR SPARES PROCURE MBC004)		1
CW-B	MBC004	.LAMP HOLDER-NORMAL SIDEWALL FLOODLIGHTS (VU0928) (FOR SPARES PROCURE IN LIEU OF MBC17)		1
		MISSING ITEM NO. NOT APPLICABLE		

– ITEM NOT ILLUSTRATED

IDENT	PART NUMBER	1234567 NOMENCLATURE	EFFECT FROM TO	UNITS PER ASSY
CX-A	MBC17	.LAMPHOLDER-EMERGENCY SIDEWALL FLOODLIGHTS (VU0928) (FOR SPARES PROCURE MBC004)		1
CX-A	MBC004	.LAMP HOLDER-NORMAL SIDEWALL FLOODLIGHTS (VU0928) (FOR SPARES PROCURE IN LIEU OF MBC17)		1
CX-B	MBC17	.LAMPHOLDER-NORMAL SIDEWALL FLOODLIGHTS (VU0928) (FOR SPARES PROCURE MBC004)		1
CX-B	MBC004	.LAMP HOLDER-NORMAL SIDEWALL FLOODLIGHTS (VU0928) (FOR SPARES PROCURE IN LIEU OF MBC17)		1
CY1-P	MTC100YH2-009	.SHELL-PLUG (VK1010) (USED WITH WAFERS: TYPE A, MTC100KT2-1103 TYPE B, MTC100KT2-1104)	222222 224224 226228 233233 235235 237237	1
CY1-P	MTC100YH2-009	.SHELL-PLUG (VK1010) (USED WITH INSERTS: PRIMARY MTC100YC1-003 SECONDARY MTC100YC1-004)	258258	1
CY1-R	MTC100YH2-010	.SHELL-RECEPTACLE (VK1010) (USED WITH WAFERS: TYPE A, MTC100KT2-1101 TYPE B, MTC100KT2-1102)	222222 224224 226228 233233 235235 237237	1
CY1-R	MTC100YH2-010	.SHELL-RECEPTACLE (VK1010) (USED WITH INSERTS: PRIMARY MTC100YC1-001 SECONDARY MTC100YC1-002)	258258	1
CY3-P	MTC100YH2-009	.SHELL-PLUG (VK1010) (USED WITH WAFERS: TYPE A, MTC100KT2-1103 TYPE B, MTC100KT2-1104)	222222 224224 226228 233233 235235 237237	1

MISSING ITEM NO. NOT APPLICABLE

– ITEM NOT ILLUSTRATED

IDENT	PART NUMBER	1234567 NOMENCLATURE	EFFECT FROM TO	UNITS PER ASSY
CY3-P	MTC100YH2-009	.SHELL-PLUG (VK1010) (USED WITH INSERTS: PRIMARY MTC100YC1-003 SECONDARY MTC100YC1-004)	258258	1
CY3-R	MTC100YH2-010	.SHELL-RECEPTACLE (VK1010) (USED WITH WAFERS: TYPE A, MTC100KT2-1101 TYPE B, MTC100KT2-1102)	222222 224224 226228 233233 235235 237237	1
CY3-R	MTC100YH2-010	.SHELL-RECEPTACLE (VK1010) (USED WITH INSERTS: PRIMARY MTC100YC1-001 SECONDARY MTC100YC1-002)	258258	1
CZ-BA	A6795C	.PILLAR LAMP- (VU0231)		1
D-T-DAE	BDX67A	.TRANSISTOR- (VK3954) (USED ON 25-8NF407-503A)		2
D-V-DAE	BDX67A	.TRANSISTOR- (VK3954) (USED ON 25-8NF399-503A)		2
DA-DAB	M400-1265	.RELAY- (VK6265) (USED WITH SOCKET: M12883-40-19 (V81349))		1
DA1-P	MTC100YH1-003	.SHELL-PLUG (VK1010) (USED WITH WAFERS: TYPE A, MTC100KT1-1101 TYPE B, MTC100KT1-1102)	222222 224224 226228 233233 235235 237237	1
DA1-P	MTC100YH1-003	.SHELL-PLUG (VK1010) (USED WITH INSERT: MTC100YC1-005)	258258	1
DA1-R	MTC100YH1-004	.SHELL-RECEPTACLE (VK1010) (USED WITH WAFERS: TYPE A, MTC100KT1-1103 TYPE B, MTC100KT1-1104)	222222 224224 226228 233233 235235 237237	1
DA1-R	MTC100YH1-004	.SHELL-RECEPTACLE (VK1010) (USED WITH INSERT: MTC100YC1-006)	258258	1
		MISSING ITEM NO. NOT APPLICABLE		

– ITEM NOT ILLUSTRATED

IDENT	PART NUMBER	1234567 NOMENCLATURE	EFFECT FROM TO	UNITS PER ASSY
DA19-P	MTC100YH2-009	.SHELL-PLUG (VK1010) (USED WITH WAFERS: TYPE A, MTC100KT2-1101 TYPE B, MTC100KT2-1102)	222222 224224 226228 233233 235235 237237	1
DA19-P	MTC100YH2-009	.SHELL-PLUG (VK1010) (USED WITH INSERTS: PRIMARY MTC100YC1-001 SECONDARY MTC100YC1-002)	258258	1
DA19-R	MTC100YH2-010	.SHELL-RECEPTACLE (VK1010) (USED WITH WAFERS: TYPE A, MTC100KT2-1103 TYPE B, MTC100KT2-1104)	222222 224224 226228 233233 235235 237237	1
DA19-R	MTC100YH2-010	.SHELL-RECEPTACLE (VK1010) (USED WITH INSERTS: PRIMARY MTC100YC1-003 SECONDARY MTC100YC1-004)	258258	1
DA2-P	MTC100YH1-003	.SHELL-PLUG (VK1010) (USED WITH WAFERS: TYPE A, MTC100KT1-1101 TYPE B, MTC100KT1-1102)	222222 224224 226228 233233 235235 237237	1
DA2-P	MTC100YH1-003	.SHELL-PLUG (VK1010) (USED WITH INSERT: MTC100YC1-005)	258258	1
DA2-R	MTC100YH1-004	.SHELL-RECEPTACLE (VK1010) (USED WITH WAFERS: TYPE A, MTC100KT1-1103 TYPE B, MTC100KT1-1104)	222222 224224 226228 233233 235235 237237	1
DA2-R	MTC100YH1-004	.SHELL-RECEPTACLE (VK1010) (USED WITH INSERT: MTC100YC1-006)	258258	1
DA20-P	MTC100YH2-009	.SHELL-PLUG (VK1010) (USED WITH WAFERS: TYPE A, MTC100KT2-1101 TYPE B, MTC100KT2-1102)	222222 224224 226228 233233 235235 237237	1

MISSING ITEM NO. NOT APPLICABLE

– ITEM NOT ILLUSTRATED

IDENT	PART NUMBER	1234567 NOMENCLATURE	EFFECT FROM TO	UNITS PER ASSY
DA20-P	MTC100YH2-009	.SHELL-PLUG (VK1010) (USED WITH INSERTS: PRIMARY MTC100YC1-001 SECONDARY MTC100YC1-002)	258258	1
DA20-R	MTC100YH2-010	.SHELL-RECEPTACLE (VK1010) (USED WITH WAFERS: TYPE A, MTC100KT2-1103 TYPE B, MTC100KT2-1104)	222222 224224 226228 233233 235235 237237	1
DA20-R	MTC100YH2-010	.SHELL-RECEPTACLE (VK1010) (USED WITH INSERTS: PRIMARY MTC100YC1-003 SECONDARY MTC100YC1-004)	258258	1
DA21-P	MTC100YH2-009	.SHELL-PLUG (VK1010) (USED WITH WAFERS: TYPE A, MTC100KT2-1101 TYPE B, MTC100KT2-1102)	222222 224224 226228 233233 235235 237237	1
DA21-P	MTC100YH2-009	.SHELL-PLUG (VK1010) (USED WITH INSERTS: PRIMARY MTC100YC1-001 SECONDARY MTC100YC1-002)	258258	1
DA21-R	MTC100YH2-010	.SHELL-RECEPTACLE (VK1010) (USED WITH WAFERS: TYPE A, MTC100KT2-1103 TYPE B, MTC100KT2-1104)	222222 224224 226228 233233 235235 237237	1
DA21-R	MTC100YH2-010	.SHELL-RECEPTACLE (VK1010) (USED WITH INSERTS: PRIMARY MTC100YC1-003 SECONDARY MTC100YC1-004)	258258	1
DA31-P	MTC100YH2-009	.SHELL-PLUG (VK1010) (USED WITH WAFERS: TYPE A, MTC100KT2-1101 TYPE B, MTC100KT2-1102)	222222 224224 226228 233233 235235 237237	1
DA31-P	MTC100YH2-009	.SHELL-PLUG (VK1010) (USED WITH INSERTS: PRIMARY MTC100YC1-001 SECONDARY MTC100YC1-002)	258258	1
		MISSING ITEM NO. NOT APPLICABLE		

– ITEM NOT ILLUSTRATED

IDENT	PART NUMBER	1234567 NOMENCLATURE	EFFECT FROM TO	UNITS PER ASSY
DA31-R	MTC100YH2-010	.SHELL-RECEPTACLE (VK1010) (USED WITH WAFERS: TYPE A, MTC100KT2-1103 TYPE B, MTC100KT2-1104)	222222 224224 226228 233233 235235 237237	1
DA31-R	MTC100YH2-010	.SHELL-RECEPTACLE (VK1010) (USED WITH INSERTS: PRIMARY MTC100YC1-003 SECONDARY MTC100YC1-004)	258258	1
DA32-P	MTC100YH2-009	.SHELL-PLUG (VK1010) (USED WITH WAFERS: TYPE A, MTC100KT2-1101 TYPE B, MTC100KT2-1102)	222222 224224 226228 233233 235235 237237	1
DA32-P	MTC100YH2-009	.SHELL-PLUG (VK1010) (USED WITH INSERTS: PRIMARY MTC100YC1-001 SECONDARY MTC100YC1-002)	258258	1
DA32-R	MTC100YH2-010	.SHELL-RECEPTACLE (VK1010) (USED WITH WAFERS: TYPE A, MTC100KT2-1103 TYPE B, MTC100KT2-1104)	222222 224224 226228 233233 235235 237237	1
DA32-R	MTC100YH2-010	.SHELL-RECEPTACLE (VK1010) (USED WITH INSERTS: PRIMARY MTC100YC1-003 SECONDARY MTC100YC1-004)	258258	1
DA46-P	MTC100YH1-003	.SHELL-PLUG (VK1010) (USED WITH WAFERS: TYPE A, MTC100KT1-1101 TYPE B, MTC100KT1-1102)	222222 224224 226228 233233 235235 237237	1
DA46-P	MTC100YH1-003	.SHELL-PLUG (VK1010) (USED WITH INSERT: MTC100YC1-005)	258258	1
DA46-R	MTC100YH1-004	.SHELL-RECEPTACLE (VK1010) (USED WITH WAFERS: TYPE A, MTC100KT1-1103 TYPE B, MTC100KT1-1104)	222222 224224 226228 233233 235235 237237	1

MISSING ITEM NO. NOT APPLICABLE

– ITEM NOT ILLUSTRATED

IDENT	PART NUMBER	1234567 NOMENCLATURE	EFFECT FROM TO	UNITS PER ASSY
DA46-R	MTC100YH1-004	.SHELL-RECEPTACLE (VK1010) (USED WITH INSERT: MTC100YC1-006)	258258	1
DA47-P	MTC100YH1-003	.SHELL-PLUG (VK1010) (USED WITH WAFERS: TYPE A, MTC100KT1-1101 TYPE B, MTC100KT1-1102)	222222 224224 226228 233233 235235 237237	1
DA47-P	MTC100YH1-003	.SHELL-PLUG (VK1010) (USED WITH INSERT: MTC100YC1-005)	258258	1
DA47-R	MTC100YH1-004	.SHELL-RECEPTACLE (VK1010) (USED WITH WAFERS: TYPE A, MTC100KT1-1103 TYPE B, MTC100KT1-1104)	222222 224224 226228 233233 235235 237237	1
DA47-R	MTC100YH1-004	.SHELL-RECEPTACLE (VK1010) (USED WITH INSERT: MTC100YC1-006)	258258	1
DA9-P	MTC100YH1-003	.SHELL-PLUG (VK1010) (USED WITH WAFERS: TYPE A, MTCX1X100-100 TYPE B, MTC100KT1-1102)	222222 224224 226228 233233 235235 237237	1
DA9-P	MTC100YH1-003	.SHELL-PLUG (VK1010) (USED WITH INSERT: MTC100YC1-005)	258258	1
DA9-R	MTC100YH1-004	.SHELL-RECEPTACLE (VK1010) (USED WITH WAFERS: TYPE A, MTCX1X100-100 TYPE B, MTC100KT1-1104)	222222 224224 226228 233233 235235 237237	1
DA9-R	MTC100YH1-004	.SHELL-RECEPTACLE (VK1010) (USED WITH INSERT: MTC100YC1-006)	258258	1
DC-DAB	M400-1265	.RELAY- (VK6265) (USED WITH SOCKET: M12883-40-19 (V81349))		1
		MISSING ITEM NO. NOT APPLICABLE		

– ITEM NOT ILLUSTRATED

IDENT	PART NUMBER	1234567 NOMENCLATURE	EFFECT FROM TO	UNITS PER ASSY
DE-DAB	M400-1265	.RELAY- (VK6265) (USED WITH SOCKET: M12883-40-19 (V81349))		1
EG-CG	2132-01-0017	.AMMETER-PITOT (VU1588)		1
E2B	L1338	.FILAMENT-E2B COMPASS LIGHT (VK0673)		1
F17-DAC	5920-99-0120076	.FUSE-5AMP (VK0657)		1
F18-DAC	5920-99-0120076	.FUSE-5AMP (VK0657)		1
F20-DAC	5920-99-0120076	.FUSE-5AMP (VK0657)		1
F6-AB	5920-99-0120076	.FUSE-5AMP (VK0657)		1
F8-DAC	5920-99-0120075	.FUSE-3AMP (VK0657)		1
J-WB	72444-030-0AV2	.TERMINAL BLOCK- (VK0574)		1
JA-DA	18046D	.WANDER LIGHT- (VK1382)		1
JA-DA-P	SA2025	.3 PIN PLUG- (VU0928)		1
JA-DA-R	SA2026	.3 PIN SOCKET- (VU0948)		1
JB-DA	2TP1-1M	.SWITCH- (V91929) (OPT (VK6596))		1
JC-DA	H1800C	.LAMP HOLDER- (VU1974)		1
JP-CG	2132-01-0013	.INDICATOR- (UNIT EXCHANGE ITEM) (VU1588)		1
JR-CG	2132-01-0012	.INDICATOR- (VU1588)		1
JS-CG	2132-01-0013	.INDICATOR- (UNIT EXCHANGE ITEM) (VU1588)		1
JT-CG	2132-01-0014	.VOLTMETER-AC (UNIT EXCHANGE ITEM) (VU1588)		1
K-WA	72444-030-0AV2	.TERMINAL BLOCK- (VK0574)		1
K-WB	72444-030-0AV2	.TERMINAL BLOCK- (VK0574)		1
L-WA	72444-030-0AV2	.TERMINAL BLOCK- (VK0574)		1
		MISSING ITEM NO. NOT APPLICABLE		

– ITEM NOT ILLUSTRATED

IDENT	PART NUMBER	1234567 NOMENCLATURE	EFFECT FROM TO	UNITS PER ASSY
L-WB	72444-030-0AV2	.TERMINAL BLOCK- (VK0574)		1
L1	25-8MC603-5	.ILLUMINATED PANEL LABEL- (USED WITH CONNECTOR: SCA11108-02 (VU2255))		1
L12	25-8NF615-1A	.ANNUNCIATOR-MWS,LH		1
L13	25-8MC603-6	.ILLUMINATED PANEL LABEL- (USED WITH CONNECTOR: SCA11108-02 (VU2255))		1
L24	25-8NF615-3A	.ANNUNCIATOR-MWS,RH		1
M-WA	72444-030-0AV2	.TERMINAL BLOCK- (VK0574)		1
M-WB	72444-030-0AV2	.TERMINAL BLOCK- (VK0574)		1
NP-CG	2132-01-0018	.INDICATOR-DUCT AIR TEMPERATURE (UNIT EXCHANGE ITEM) (VU1588)		1
NR-CG	2132-01-0015	.INDICATOR-CABIN TEMPERATURE (UNIT EXCHANGE ITEM) (VU1588)		1
NS-CG	C52-10	.RECEPTACLE- (V06097)		1
PH-CG	C52-10	.RECEPTACLE- (V06097)		1
PT-CG	C52-10	.RECEPTACLE- (V06097)		1
PX-CG	C52-10	.RECEPTACLE- (V06097)		1
P2-CC	25-9MC75-1A	.LABEL ASSY-CABIN PRESSURE (V+1251)		1
RK-BA	A6795C	.PILLAR LAMP- (VU0231)		1
RR-BA	HWBUN1146D10B	.TERMINAL BLOCK- (VK0574)		1
RT-BA	A4896A7-24	.LAMP- (V72914)		1
RU-BA	A6795C	.PILLAR LAMP- (VU0231)		1
S	140-4538	.POTENTIOMETER- (VK1021)		1
		MISSING ITEM NO. NOT APPLICABLE		

– ITEM NOT ILLUSTRATED

IDENT	PART NUMBER	1234567 NOMENCLATURE	EFFECT FROM TO	UNITS PER ASSY
S-DAE	25-8NF405-503A	.HEAT SINK ASSY (COMPRISING OF: TRANSISTOR BDX67A (VK3954) RESISTOR 5905-99-0135622 (VK0064) RESISTOR 5905-99-0135626 (VK0064) TERMINAL BLOCK HWBUN1736S10B (VK0574))		1
SC-P	MTC100YH2-009	.SHELL-PLUG (VK1010) (USED WITH WAFERS: TYPE A, MTC100KT2-1103 DUMMY B, MTCX2X200-200)	222222 224224 226228 233233 235235 237237	1
SC-P	MTC100YH2-009	.SHELL-PLUG (VK1010) (USED WITH INSERTS: PRIMARY MTC100YC1-003 SECONDARY MTC100YC1-004)	258258	1
SC-R	MTC100YH2-010	.SHELL-RECEPTACLE (VK1010) (USED WITH WAFERS: TYPE A, MTC100KT2-1101 DUMMY B, MTCX2X200-X200)	222222 224224 226228 233233 235235 237237	1
SC-R	MTC100YH2-010	.SHELL-RECEPTACLE (VK1010) (USED WITH INSERTS: PRIMARY MTC100YC1-001 SECONDARY MTC100YC1-002)	258258	1
SJ-DAJ	CV7313	.DIODE- (VK0004)		1
SK-DAJ	CV7313	.DIODE- (VK0004)		1
T	140-4538	.POTENTIOMETER- (VK1021)		1
T-DAE	25-8NF407-503A	.HEAT SINK ASSY (COMPRISING OF: TRANSISTOR BDX67A (VK3954) RESISTOR 5905-99-0135622 (VK0064) RESISTOR 5905-99-0135626 (VK0064) TERMINAL BLOCK HWBUN1736S10B (VK0574))		1
		MISSING ITEM NO. NOT APPLICABLE		

– ITEM NOT ILLUSTRATED

IDENT	PART NUMBER	1234567 NOMENCLATURE	EFFECT FROM TO	UNITS PER ASSY
TA-AB	HWBUN1146D5B	.TERMINAL BLOCK- (VK0574)		1
V	140-4538	.POTENTIOMETER- (VK1021)		1
V-DAE	25-8NF399-503A	.HEAT SINK ASSY (COMPRISING OF: TRANSISTOR BDX67A (VK3954) RESISTOR 5905-99-0135622 (VK0064) RESISTOR 5905-99-0135626 (VK0064) TERMINAL BLOCK HWBUN1736S10B (VK0574))		1
VL-CG	HWBUN1146S10B	.TERMINAL BLOCK- (VK0574)		1
VM-CG	HWBUN1146S10B	.TERMINAL BLOCK- (VK0574)		1
W-DAE	25-8NF403-503A	.HEAT SINK ASSY (COMPRISING OF: TRANSISTOR BDX67A (VK3954) RESISTOR 5905-99-0135622 (VK0064) RESISTOR 5905-99-0135626 (VK0064) TERMINAL BLOCK HWBUN1736S10B (VK0574))		1
WK	1TP1-3	.SWITCH- (VK6596)		1
WL	M2641	.SPOT LAMP- (VU0801)		1
WQ-BA	HWBUN1736D10B	.TERMINAL BLOCK- (VK0574)		1
X	140-4538	.POTENTIOMETER- (VK1021)		1
X-DAE	25-8NF401-503A	.HEAT SINK ASSY (COMPRISING OF: TRANSISTOR BDX67A (VK3954) RESISTOR 5905-99-0135622 (VK0064) RESISTOR 5905-99-0135626 (VK0064) TERMINAL BLOCK HWBUN1736S10B (VK0574))		1
		MISSING ITEM NO. NOT APPLICABLE		

– ITEM NOT ILLUSTRATED

IDENT	PART NUMBER	1234567 NOMENCLATURE	EFFECT FROM TO	UNITS PER ASSY
Y	512TS1-1	.SWITCH- (VK6596)		1
Y2-DAB	MRTB20E04-111	.TERMINAL JUNCTION MODULE- (V14283)		1
Z	512TS1-1	.SWITCH- (VK6596)		1
		MISSING ITEM NO. NOT APPLICABLE		

– ITEM NOT ILLUSTRATED

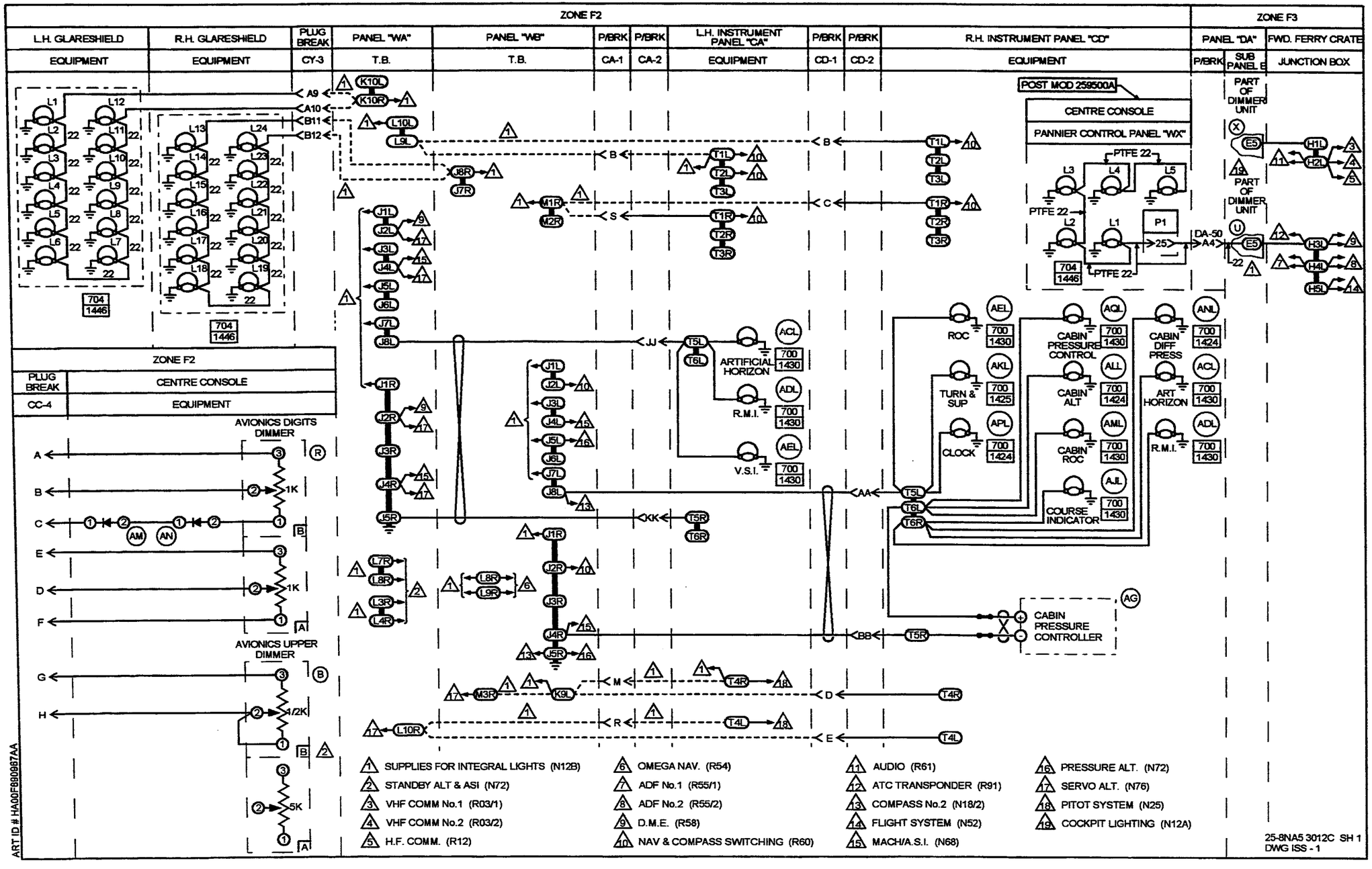
ZONE F2
L.H. GLARESHIELD EQUIPMENT
R.H. GLARESHIELD EQUIPMENT
PLUG BREAK CY-3
PANEL "WA" T.B.
PANEL "WB" T.B.
P/BRK CA-1
P/BRK CA-2
L.H. INSTRUMENT PANEL "CA" EQUIPMENT
P/BRK CD-1
P/BRK CD-2
R.H. INSTRUMENT PANEL "CD" EQUIPMENT
ZONE F3
PANEL "DA" P/BRK
SUB PANEL E
FWD. FERRY CRATE JUNCTION BOX
POST MOD 259500A
CENTRE CONSOLE
PANNIER CONTROL PANEL "WX"
PART OF DIMMER UNIT
ZONE F2
PLUG BREAK CC-4
CENTRE CONSOLE EQUIPMENT
AVIONICS DIGITS DIMMER
AVIONICS UPPER DIMMER
ARTIFICIAL HORIZON
R.M.I.
V.S.I.
ROC
TURN & SUP
CLOCK
CABIN PRESSURE CONTROL
CABIN ALT
CABIN ROC
COURSE INDICATOR
CABIN DIFF PRESS
ART HORIZON
CABIN PRESSURE CONTROLLER
1 SUPPLIES FOR INTEGRAL LIGHTS (N12B)
2 STANDBY ALT & ASI (N72)
3 VHF COMM No.1 (R03/1)
4 VHF COMM No.2 (R03/2)
5 H.F. COMM. (R12)
6 OMEGA NAV. (R54)
7 ADF No.1 (R55/1)
8 ADF No.2 (R55/2)
9 D.M.E. (R58)
10 NAV & COMPASS SWITCHING (R60)
11 AUDIO (R61)
12 ATC TRANSPONDER (R91)
13 COMPASS No.2 (N18/2)
14 FLIGHT SYSTEM (N52)
15 MACH/A.S.I. (N68)
16 PRESSURE ALT. (N72)
17 SERVO ALT. (N76)
18 PITOT SYSTEM (N25)
19 COCKPIT LIGHTING (N12A)
ART ID # HA00F690987AA
25-8NA5 3012C SH 1
DWG ISS - 1

IDENT	PART NUMBER	1234567 NOMENCLATURE	EFFECT FROM TO	UNITS PER ASSY
		COCKPIT LIGHTS	111111 113113 124124 144144 171171 178178 235235 237237	
	25-8NA5-3012C	WIRING DIAGRAM- (MOD 259499A)		RF
ACL-CA	A8970C1	.LAMPHOLDER- (VU0231)		1
ACL-CD	A8970C1	.LAMPHOLDER- (VU0231)		1
ADL-CA	A8970C1	.LAMPHOLDER- (VU0231)		1
ADL-CD	A8970C1	.LAMPHOLDER- (VU0231)		1
AEL-CA	A8970C1	.LAMPHOLDER- (VU0231)		1
AEL-CD	A8970C1	.LAMPHOLDER- (VU0231)		1
AG-CD	130530-4	.CONTROLLER-CABIN PRESSURE (UNIT EXCHANGE ITEM) (V70210)		1
AJL-CD	A8970C1	.LAMPHOLDER- (VU0231)		1
AKL-CD	A8975C2	.LAMPHOLDER- (VU0231)		1
ALL-CD	A8970C2	.LAMPHOLDER- (VU0231)		1
AM	CV7040	.DIODE- (VK0004)		1
AML-CD	A8970C1	.LAMPHOLDER- (VU0231)		1
AN	CV7040	.DIODE- (VK0004)		1
ANL-CD	A8970C2	.LAMPHOLDER- (VU0231)		1
APL-CD	A8970C2	.LAMPHOLDER- (VU0231)		1
AQL-CD	A8970C1	.LAMPHOLDER- (VU0231)		1
B	D38IN5K500RLIN	.POTENTIOMETER- (VK0064)		1
CA1-P	BAEREF000004326	.CONNECTOR-SOCKET (6027-16-26SNCONDB) (VK1793)		1
		MISSING ITEM NO. NOT APPLICABLE		

– ITEM NOT ILLUSTRATED

IDENT	PART NUMBER	1234567 NOMENCLATURE	EFFECT FROM TO	UNITS PER ASSY
CA1-R	BAEREF000003120	.CONNECTOR-PIN (6026-16-26PNCONDB) (VK1793)		1
CA2-P	BAEREF000003708	.CONNECTOR-SOCKET (6027-24-61SNCONDD) (VK1793)		1
CA2-R	BAEREF000003118	.CONNECTOR-PIN (6026-24-61PNCONDD) (VK1793)		1
CC4-P	BAEREF000003145	.CONNECTOR-SOCKET (6027-14-19SNCONDB) (VK1793)		1
CC4-R	BAEREF000003143	.CONNECTOR-PIN (6026-14-19PNCONDB) (VK1793)		1
CD1-P	BAEREF000003145	.CONNECTOR-SOCKET (6027-14-19SNCONDB) (VK1793)		1
CD1-R	BAEREF000003143	.CONNECTOR-PIN (6026-14-19PNCONDB) (VK1793)		1
CD2-P	125REF000000060	.CONNECTOR-SOCKET (6020-22-55PNCONDD) (VK1793)		1
CD2-R	BAEREF000003897	.CONNECTOR-PIN (6026-22-55SNCONDD) (VK1793)		1
CY3-P	MTC100YH2-009	.SHELL-PLUG (VK1010) (USED WITH WAFERS: TYPE A, MTC100KT2-1103 TYPE B, MTC100KT2-1104)		1
CY3-R	MTC100YH2-010	.SHELL-RECEPTACLE (VK1010) (USED WITH WAFERS: TYPE A, MTC100KT2-1101 TYPE B, MTC100KT2-1102)		1
DA50-P	MTC100YH1-003	.SHELL-PLUG (VK1010) (USED WITH WAFERS: TYPE A, MTC100KT1-1101 TYPE B, MTC100KT1-1102)		1
DA50-R	MTC100YH1-004	.SHELL-RECEPTACLE (VK1010) (USED WITH WAFERS: TYPE A, MTC100KT1-1103 TYPE B, MTC100KT1-1104)		1
E-U-DAE	HWBUN1736S10B	.TERMINAL BLOCK- (VK0574)		1
		MISSING ITEM NO. NOT APPLICABLE		

– ITEM NOT ILLUSTRATED

IDENT	PART NUMBER	1234567 NOMENCLATURE	EFFECT FROM TO	UNITS PER ASSY
E-X-DAE	HWBUN1736S10B	.TERMINAL BLOCK- (VK0574)		1
H	HWBUN1736D10B	.TERMINAL BLOCK- (VK0574)		1
J-WA	72444-030-0AV2	.TERMINAL BLOCK- (VK0574)		1
J-WB	72444-030-0AV2	.TERMINAL BLOCK- (VK0574)		1
K-WA	72444-030-0AV2	.TERMINAL BLOCK- (VK0574)		1
K-WB	72444-030-0AV2	.TERMINAL BLOCK- (VK0574)		1
L-WA	72444-030-0AV2	.TERMINAL BLOCK- (VK0574)		1
L-WB	72444-030-0AV2	.TERMINAL BLOCK- (VK0574)		1
L1	B375-01	.LAMP HOLDER- (VK0673)		1
L1-WX	B375-01	.LAMP HOLDER- (VK0673)		1
L10	B375-01	.LAMP HOLDER- (VK0673)		1
L11	B375-01	.LAMP HOLDER- (VK0673)		1
L12	B375-01	.LAMP HOLDER- (VK0673)		1
L13	B375-01	.LAMP HOLDER- (VK0673)		1
L14	B375-01	.LAMP HOLDER- (VK0673)		1
L15	B375-01	.LAMP HOLDER- (VK0673)		1
L16	B375-01	.LAMP HOLDER- (VK0673)		1
L17	B375-01	.LAMP HOLDER- (VK0673)		1
L18	B375-01	.LAMP HOLDER- (VK0673)		1
L19	B375-01	.LAMP HOLDER- (VK0673)		1
L2	B375-01	.LAMP HOLDER- (VK0673)		1
L2-WX	B375-01	.LAMP HOLDER- (VK0673)		1
L20	B375-01	.LAMP HOLDER- (VK0673)		1
L21	B375-01	.LAMP HOLDER- (VK0673)		1
L22	B375-01	.LAMP HOLDER- (VK0673)		1
		MISSING ITEM NO. NOT APPLICABLE		

– ITEM NOT ILLUSTRATED

IDENT	PART NUMBER	1234567 NOMENCLATURE	EFFECT FROM TO	UNITS PER ASSY
L23	B375-01	.LAMP HOLDER- (VK0673)		1
L24	B375-01	.LAMP HOLDER- (VK0673)		1
L3	B375-01	.LAMP HOLDER- (VK0673)		1
L3-WX	B375-01	.LAMP HOLDER- (VK0673)		1
L4	B375-01	.LAMP HOLDER- (VK0673)		1
L4-WX	B375-01	.LAMP HOLDER- (VK0673)		1
L5	B375-01	.LAMP HOLDER- (VK0673)		1
L5-WX	B375-01	.LAMP HOLDER- (VK0673)		1
L6	B375-01	.LAMP HOLDER- (VK0673)		1
L7	B375-01	.LAMP HOLDER- (VK0673)		1
L8	B375-01	.LAMP HOLDER- (VK0673)		1
L9	B375-01	.LAMP HOLDER- (VK0673)		1
M-WB	72444-030-0AV2	.TERMINAL BLOCK- (VK0574)		1
P1-WX-P	DBMA25S	.CONNECTOR-SOCKET (VK0316)		1
P1-WX-R	DBMA25P	.CONNECTOR-PIN (VK0316)		1
R	RD328B1B3	.POTENTIOMETER- (VK1021)		1
T-CA	HWBUN1736D6B	.TERMINAL BLOCK- (VK0574)		1
T-CD	HWBUN1736D6B	.TERMINAL BLOCK- (VK0574)		1
		MISSING ITEM NO. NOT APPLICABLE		

– ITEM NOT ILLUSTRATED

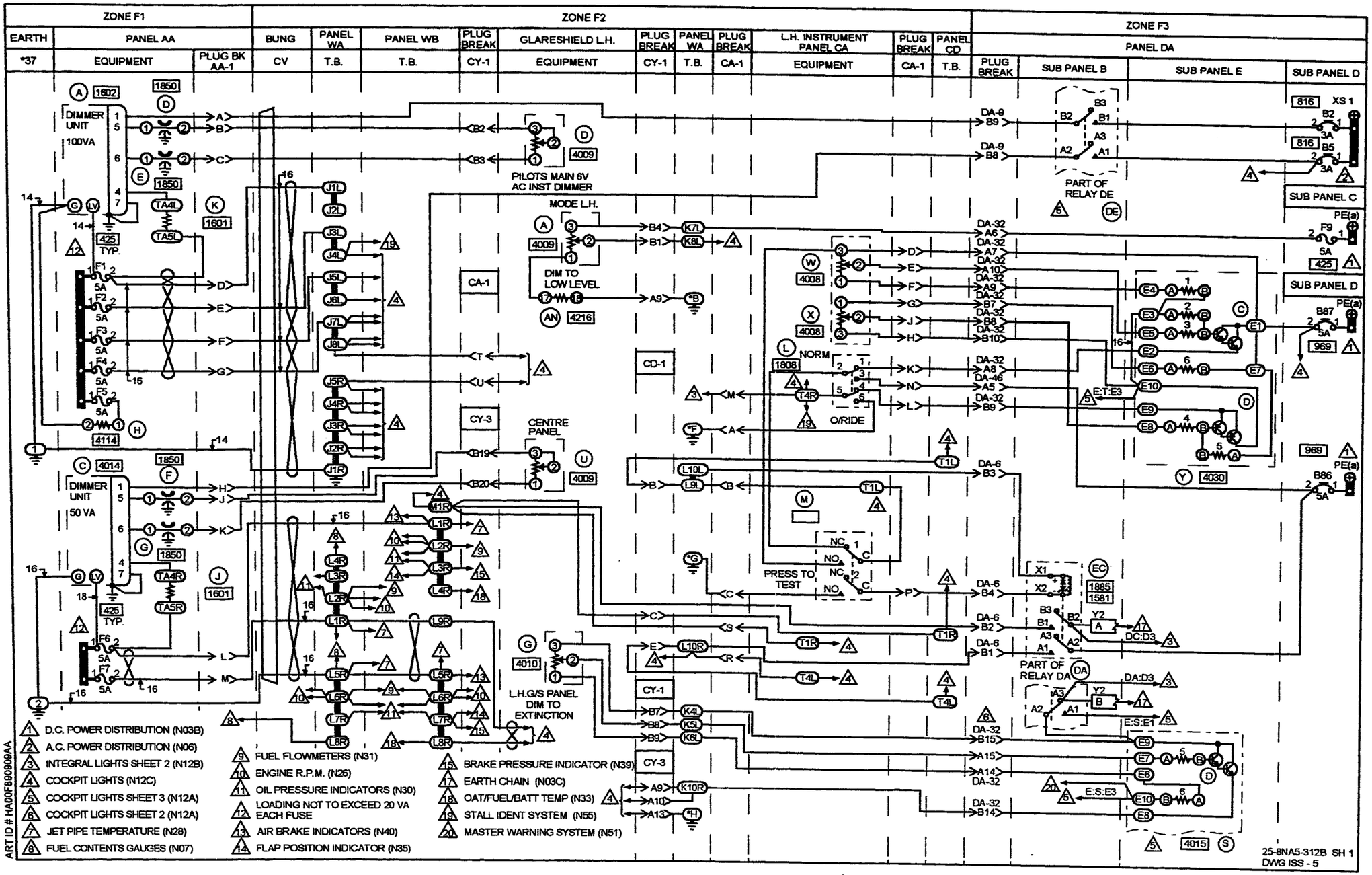
ZONE F1
EARTH
PANEL AA
*37
EQUIPMENT
PLUG BK AA-1
ZONE F2
BUNG
CV
PANEL WA
T.B.
PANEL WB
PLUG BREAK
CY-1
GLARESHIELD L.H.
EQUIPMENT
PLUG BREAK
CY-1
PANEL WA
T.B.
PLUG BREAK
CA-1
L.H. INSTRUMENT PANEL CA
EQUIPMENT
PLUG BREAK
CA-1
PANEL CD
T.B.
ZONE F3
PANEL DA
PLUG BREAK
SUB PANEL B
SUB PANEL E
SUB PANEL D
DIMMER UNIT
100VA
DIMMER UNIT
50 VA
PILOTS MAIN 6V AC INST DIMMER
MODE L.H.
DIM TO LOW LEVEL
CENTRE PANEL
L.H.G/S PANEL DIM TO EXTINCTION
NORM
O/RIDE
PRESS TO TEST
PART OF RELAY DE
PART OF RELAY DA
SUB PANEL C
SUB PANEL D
XS 1
1 D.C. POWER DISTRIBUTION (N03B)
2 A.C. POWER DISTRIBUTION (N06)
3 INTEGRAL LIGHTS SHEET 2 (N12B)
4 COCKPIT LIGHTS (N12C)
5 COCKPIT LIGHTS SHEET 3 (N12A)
6 COCKPIT LIGHTS SHEET 2 (N12A)
7 JET PIPE TEMPERATURE (N28)
8 FUEL CONTENTS GAUGES (N07)
9 FUEL FLOWMETERS (N31)
10 ENGINE R.P.M. (N26)
11 OIL PRESSURE INDICATORS (N30)
12 LOADING NOT TO EXCEED 20 VA EACH FUSE
13 AIR BRAKE INDICATORS (N40)
14 FLAP POSITION INDICATOR (N35)
15 BRAKE PRESSURE INDICATOR (N39)
17 EARTH CHAIN (N03C)
18 OAT/FUEL/BATT TEMP (N33)
19 STALL IDENT SYSTEM (N55)
20 MASTER WARNING SYSTEM (N51)
ART ID # HA00F890909AA
25-8NA5-312B SH 1
DWG ISS - 5

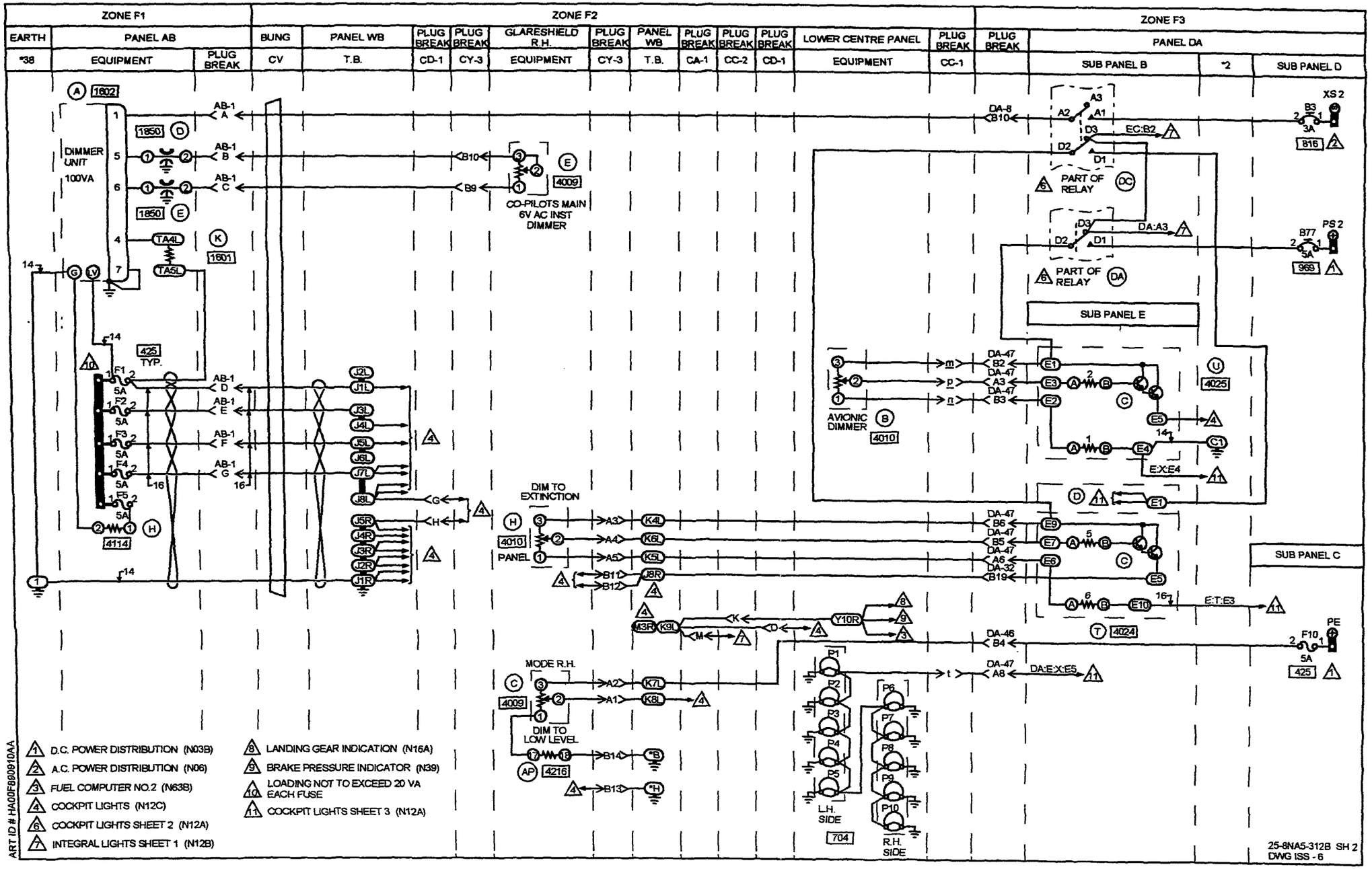
ZONE F1
EARTH
PANEL AB
PLUG BREAK
*38
EQUIPMENT
ZONE F2
BUNG
PANEL WB
PLUG BREAK
GLARESHIELD R.H.
LOWER CENTRE PANEL
CV
T.B.
CD-1
CY-3
EQUIPMENT
CA-1
CC-2
CC-1
ZONE F3
PANEL DA
SUB PANEL B
*2
SUB PANEL D
DIMMER UNIT 100VA
CO-PILOTS MAIN 6V AC INST DIMMER
PART OF RELAY
SUB PANEL E
AVIONIC DIMMER
DIM TO EXTINCTION
PANEL
MODE R.H.
DIM TO LOW LEVEL
L.H. SIDE
R.H. SIDE
SUB PANEL C
1 D.C. POWER DISTRIBUTION (N03B)
2 A.C. POWER DISTRIBUTION (N06)
3 FUEL COMPUTER NO.2 (N63B)
4 COCKPIT LIGHTS (N12C)
6 COCKPIT LIGHTS SHEET 2 (N12A)
7 INTEGRAL LIGHTS SHEET 1 (N12B)
8 LANDING GEAR INDICATION (N16A)
9 BRAKE PRESSURE INDICATOR (N39)
10 LOADING NOT TO EXCEED 20 VA EACH FUSE
11 COCKPIT LIGHTS SHEET 3 (N12A)
ART ID # HA00F990910AA
25-8NA5-312B SH 2
DWG ISS - 6

IDENT	PART NUMBER	1234567 NOMENCLATURE	EFFECT FROM TO	UNITS PER ASSY
		SUPPLIES FOR INTEGRAL LIGHTS	091131 223223 225225 229232 234234 236236 238243 246252	
	25-8NA5-312B	WIRING DIAGRAM- (MOD 253149C)		RF
A	140-4537	.POTENTIOMETER- (VK1021)		1
A-AA	4-013-02	.DIMMER UNIT-100VA (UNIT EXCHANGE ITEM) (VK4184)		1
A-AA-R	LS10215R12-12SN	.CONNECTOR-SOCKET (VK1793)		1
A-AB	4-013-02	.DIMMER UNIT-100VA (UNIT EXCHANGE ITEM) (VK4184)		1
A-AB-R	LS10215R12-12SN	.CONNECTOR-SOCKET (VK1793)		1
AA1-P	BAEREF000004167	.CONNECTOR-SOCKET (6027-20-16SNCONDD (VK1793))		1
AA1-R	BAEREF000003937	.CONNECTOR-PIN (6026-20-16PNCONDD (VK1793))		1
AB1-P	BAEREF000004167	.CONNECTOR-SOCKET (6027-20-16SNCONDD (VK1793))		1
AB1-R	BAEREF000003937	.CONNECTOR-PIN (6026-20-16PNCONDD (VK1793))		1
AN	TR5-680R	.RESISTOR-2PCT (VK4184) (OPT MR5-680R (VK0064)) (OPT M05-680R (VK4265))		1
AP	TR5-680R	.RESISTOR-2PCT (VK4184) (OPT MR5-680R (VK0064)) (OPT M05-680R (VK4265))		1
B-CC	D38IN5K500RLIN	.POTENTIOMETER-AVIONIC DIMMER (VK0064)		1
		MISSING ITEM NO. NOT APPLICABLE		

– ITEM NOT ILLUSTRATED

IDENT	PART NUMBER	1234567 NOMENCLATURE	EFFECT FROM TO	UNITS PER ASSY
B2-DAD	483TCG11J25-3A	.CIRCUIT BREAKER-3AMP (VU0091)		1
B3-DAD	483TCG11J25-3A	.CIRCUIT BREAKER-3AMP (VU0091)		1
B5-DAD	483TCG11J25-3A	.CIRCUIT BREAKER-3AMP (VU0091)		1
B77-DAD	483TCG11J25-5A	.CIRCUIT BREAKER-5AMP (VU0091)		1
B86-DAD	483TCG11J25-5A	.CIRCUIT BREAKER-5AMP (VU0091)		1
B87-DAD	483TCG11J25-5A	.CIRCUIT BREAKER-5AMP (VU0091)		1
C	140-4537	.POTENTIOMETER- (VK1021)		1
C-AA	4-013-01	.DIMMER UNIT-50VA (VK4184)		1
C-AA-R	LS10215R12-12SN	.CONNECTOR-SOCKET (VK1793)		1
C-T-DAE	BDX67A	.TRANSISTOR- (VK3954) (USED ON 25-8NF407-503A)		1
C-U-DAE	BDX67A	.TRANSISTOR- (VK3954) (USED ON 25-8NF409-503A)		1
C-Y-DAE	BDX67A	.TRANSISTOR- (VK3954) (USED ON 25-8NF397-503A)		1
CA1-P	BAEREF000004326	.CONNECTOR-SOCKET (6027-16-26SNCONDB (VK1793)) (USED WITH OUTLET: GTR71-16NACS1 (VU0419))		1
CA1-R	BAEREF000003120	.CONNECTOR-PIN (6026-16-26PNCONDB (VK1793)) (USED WITH OUTLET: GTR62-16NACS1 (VU0419))		1
CC1-P	BAEREF000004350	.CONNECTOR-SOCKET (6027-20-41SNCONDA (VK1793)) (USED WITH OUTLET: GTR62-20NACS1 (VU0419))		1
CC1-R	6026-20-41PN	.CONNECTOR-PIN (VK4161) (USE WITH OUTLET: GTR62-20NACS1 (VU0419))		1
		MISSING ITEM NO. NOT APPLICABLE		

– ITEM NOT ILLUSTRATED

IDENT	PART NUMBER	1234567 NOMENCLATURE	EFFECT FROM TO	UNITS PER ASSY
CC2-P	BAEREF000004392	.CONNECTOR-SOCKET (6027-20-41SWCONDA (VK1793)) (USED WITH OUTLET: GTR62-20NACS1 (VU0419))		1
CC2-R	6026-20-41PW	.CONNECTOR-PIN (VK4161) (USE WITH OUTLET: GTR62-20NACS1 (VU0419)) (REF DWG 25-8NF593)		1
CD1-P	BAEREF000004349	.CONNECTOR-SOCKET (6027-14-19SNCONDA (VK1793)) (USED WITH OUTLET: GTR71-16NACS1 (VU0419))		1
CD1-R	BAEREF000003282	.CONNECTOR-PIN (6026-14-19PNCONDB (VK1793)) (USE WITH OUTLET: GTR62-14NACS1 (VU0419))		1
CV	422253-15	.BUNG- (VK1793)		1
CY1-P	MTC100YH2-009	.SHELL-PLUG (VK1010) (USED WITH WAFERS: TYPE A, MTC100KT2-1103 TYPE B, MTC100KT2-1104)		1
CY1-R	MTC100YH2-010	.SHELL-RECEPTACLE (VK1010) (USED WITH WAFERS: TYPE A, MTC100KT2-1101 TYPE B, MTC100KT2-1102)		1
CY3-P	MTC100YH2-009	.SHELL-PLUG (VK1010) (USED WITH WAFERS: TYPE A, MTC100KT2-1103 TYPE B, MTC100KT2-1104)		1
CY3-R	MTC100YH2-010	.SHELL-RECEPTACLE (VK1010) (USED WITH WAFERS: TYPE A, MTC100KT2-1101 TYPE B, MTC100KT2-1102)		1
D	140-4537	.POTENTIOMETER- (VK1021)		1
D-AA	E1250-003	.CAPACITOR- (VK1672)		1
		MISSING ITEM NO. NOT APPLICABLE		

– ITEM NOT ILLUSTRATED

IDENT	PART NUMBER	1234567 NOMENCLATURE	EFFECT FROM TO	UNITS PER ASSY
D-AB	E1250-003	.CAPACITOR- (VK1672)		1
D-S-DAE	BDX67A	.TRANSISTOR- (VK3954) (USED ON 25-8NF405-503A)		1
D-Y-DAE	BDX66A	.TRANSISTOR- (VK3954) (USED ON 25-8NF397-503A)		1
DA-DAB	M400-1265	.RELAY- (VK6265) (USED WITH SOCKET: M12883-40-19 (V81349))		1
DA32-P	MTC100YH2-009	.SHELL-PLUG (VK1010) (USED WITH WAFERS: TYPE A, MTC100KT2-1101 TYPE B, MTC100KT2-1102)		1
DA32-R	MTC100YH2-010	.SHELL-RECEPTACLE (VK1010) (USED WITH WAFERS: TYPE A, MTC100KT2-1103 TYPE B, MTC100KT2-1104)		1
DA46-P	MTC100YH1-003	.SHELL-PLUG (VK1010) (USED WITH WAFERS: TYPE A, MTC100KT1-1101 TYPE B, MTC100KT1-1102)		1
DA46-R	MTC100YH1-004	.SHELL-RECEPTACLE (VK1010) (USED WITH WAFERS: TYPE A, MTC100KT1-1103 TYPE B, MTC100KT1-1104)		1
DA47-P	MTC100YH1-003	.SHELL-PLUG (VK1010) (USED WITH WAFERS: TYPE A, MTC100KT1-1101 TYPE B, MTC100KT1-1102)		1
DA47-R	MTC100YH1-004	.SHELL-RECEPTACLE (VK1010) (USED WITH WAFERS: TYPE A, MTC100KT1-1103 TYPE B, MTC100KT1-1104)		1
DA6-P	MTC100YH2-009	.SHELL-PLUG (VK1010) (USED WITH WAFERS: TYPE A, MTC100KT2-1101 TYPE B, MTC100KT2-1102)		1
		MISSING ITEM NO. NOT APPLICABLE		

– ITEM NOT ILLUSTRATED

IDENT	PART NUMBER	1234567 NOMENCLATURE	EFFECT FROM TO	UNITS PER ASSY
DA6-R	MTC100YH2-010	.SHELL-RECEPTACLE (VK1010) (USED WITH WAFERS: TYPE A, MTC100KT2-1103 TYPE B, MTC100KT2-1104)		1
DA8-P	MTC100YH1-003	.SHELL-PLUG (VK1010) (USED WITH WAFERS: TYPE A, MTC100KT1-1101 TYPE B, MTC100KT1-1102)		1
DA8-R	MTC100YH1-004	.SHELL-RECEPTACLE (VK1010) (USED WITH WAFERS: TYPE A, MTC100KT1-1103 TYPE B, MTC100KT1-1104)		1
DA9-P	MTC100YH1-003	.SHELL-PLUG (VK1010) (USED WITH WAFERS: DUMMY, MTCX1X100-100 TYPE B, MTC100KT1-1102)		1
DA9-R	MTC100YH1-004	.SHELL-RECEPTACLE (VK1010) (USED WITH WAFERS: DUMMY, MTCX1X100-100 TYPE B, MTC100KT1-1104)		1
DC-DAB	M400-1265	.RELAY- (VK6265) (USED WITH SOCKET: M12883-40-19 (V81349))		1
DE-DAB	M400-1265	.RELAY- (VK6265) (USED WITH SOCKET: M12883-40-19 (V81349))		1
E	140-4537	.POTENTIOMETER- (VK1021)		1
E-AA	E1250-003	.CAPACITOR- (VK1672)		1
E-AB	E1250-003	.CAPACITOR- (VK1672)		1
E-S-DAE	HWBUN1736S10B	.TERMINAL BLOCK- (VK0574) (USED ON 25-8NF405-503A)		1
E-T-DAE	HWBUN1736S10B	.TERMINAL BLOCK- (VK0574) (USED ON 25-8NF407-503A)		1
E-U-DAE	HWBUN1736S10B	.TERMINAL BLOCK- (VK0574) (USED ON 25-8NF409-503A)		1
		MISSING ITEM NO. NOT APPLICABLE		

– ITEM NOT ILLUSTRATED

IDENT	PART NUMBER	1234567 NOMENCLATURE	EFFECT FROM TO	UNITS PER ASSY
E-Y-DAE	HWBUN1736S10B	.TERMINAL BLOCK- (VK0574) (USED ON 25-8NF397-503A)		1
EC-DAB	M300-1264	.RELAY- (VK6265) (USED WITH SOCKET: M12883-41-16 (V81349))		1
F-AA	E1250-003	.CAPACITOR- (VK1672)		1
F1-AA	5920-99-0120076	.FUSE-5AMP (VK0657)		1
F1-AB	5920-99-0120076	.FUSE-5AMP (VK0657)		1
F10-DAC	5920-99-0120076	.FUSE-5AMP (VK0657)		1
F2-AA	5920-99-0120076	.FUSE-5AMP (VK0657)		1
F2-AB	5920-99-0120076	.FUSE-5AMP (VK0657)		1
F3-AA	5920-99-0120076	.FUSE-5AMP (VK0657)		1
F3-AB	5920-99-0120076	.FUSE-5AMP (VK0657)		1
F4-AA	5920-99-0120076	.FUSE-5AMP (VK0657)		1
F4-AB	5920-99-0120076	.FUSE-5AMP (VK0657)		1
F5-AA	5920-99-0120076	.FUSE-5AMP (VK0657)		1
F5-AB	5920-99-0120076	.FUSE-5AMP (VK0657)		1
F6-AA	5920-99-0120076	.FUSE-5AMP (VK0657)		1
F7-AA	5920-99-0120076	.FUSE-5AMP (VK0657)		1
F9-DAC	5920-99-0120076	.FUSE-5AMP (VK0657)		1
G	140-4538	.POTENTIOMETER- (VK1021)		1
G-AA	E1250-003	.CAPACITOR- (VK1672)		1
H	140-4538	.POTENTIOMETER- (VK1021)		1
H-AA	HSA50-1R8	.RESISTOR- (V+1251)		1
H-AB	HSA50-1R8	.RESISTOR- (V+1251)		1
		MISSING ITEM NO. NOT APPLICABLE		

– ITEM NOT ILLUSTRATED

IDENT	PART NUMBER	1234567 NOMENCLATURE	EFFECT FROM TO	UNITS PER ASSY
J-AA	25-8NF441-31A	.RESISTOR ASSY- (COMPRISING OF: RESISTOR 5905-99-0135979 (VK0657))		1
J-WA	72444-030-0AV2	.TERMINAL BLOCK- (VK0574)		1
J-WB	72444-030-0AV2	.TERMINAL BLOCK- (VK0574)		1
K-AA	25-8NF441-31A	.RESISTOR ASSY- (COMPRISING OF: RESISTOR 5905-99-0135979 (VK0657))		1
K-AB	25-8NF441-31A	.RESISTOR ASSY- (COMPRISING OF: RESISTOR 5905-99-0135979 (VK0657))		1
K-WA	72444-030-0AV2	.TERMINAL BLOCK- (VK0574)		1
K-WB	72444-030-0AV2	.TERMINAL BLOCK- (VK0574)		1
L-CA	6AT4	.SWITCH- (V91929) (OPT (VK6596))		1
L-WA	72444-030-0AV2	.TERMINAL BLOCK- (VK0574)		1
L-WB	72444-030-0AV2	.TERMINAL BLOCK- (VK0574)		1
M-CA	2D2	.SWITCH MODULE- (V91929) (OPT (VK6596)) (COMPRISING OF: SWITCH 6A43 (VK6596))		1
M-WB	72444-030-0AV2	.TERMINAL BLOCK- (VK0574)		1
P1-CC	L1330	.FILAMENT- (VK0690) (OPT 6838 (VK3197) (OPT (V00357)))		1
P10-CC	L1330	.FILAMENT- (VK0690) (OPT 6838 (VK3197) (OPT (V00357)))		1
P2-CC	L1330	.FILAMENT- (VK0690) (OPT 6838 (VK3197) (OPT (V00357)))		1
		MISSING ITEM NO. NOT APPLICABLE		

– ITEM NOT ILLUSTRATED

IDENT	PART NUMBER	1234567 NOMENCLATURE	EFFECT FROM TO	UNITS PER ASSY
P3-CC	L1330	.FILAMENT- (VK0690) (OPT 6838 (VK3197) (OPT (V00357)))		1
P4-CC	L1330	.FILAMENT- (VK0690) (OPT 6838 (VK3197) (OPT (V00357)))		1
P5-CC	L1330	.FILAMENT- (VK0690) (OPT 6838 (VK3197) (OPT (V00357)))		1
P6-CC	L1330	.FILAMENT- (VK0690) (OPT 6838 (VK3197) (OPT (V00357)))		1
P7-CC	L1330	.FILAMENT- (VK0690) (OPT 6838 (VK3197) (OPT (V00357)))		1
P8-CC	L1330	.FILAMENT- (VK0690) (OPT 6838 (VK3197) (OPT (V00357)))		1
P9-CC	L1330	.FILAMENT- (VK0690) (OPT 6838 (VK3197) (OPT (V00357)))		1
S-DAE	25-8NF405-503A	.HEAT SINK ASSY- (COMPRISING OF: TRANSISTOR BDX67A (VK3954) TERMINAL BLOCK HWBUN1736S10B (VK0574) POSITION 5 RESISTOR 5905-99-0135626 POSITION 6 RESISTOR 5905-99-0135622 (VK0064))		1
T-CA	HWBUN1736D6B	.TERMINAL BLOCK- (VK0574)		1
		MISSING ITEM NO. NOT APPLICABLE		

– ITEM NOT ILLUSTRATED

IDENT	PART NUMBER	1234567 NOMENCLATURE	EFFECT FROM TO	UNITS PER ASSY
T-CD	HWBUN1736D6B	.TERMINAL BLOCK- (VK0574)		1
T-DAE	25-8NF407-503A	.HEAT SINK ASSY- (COMPRISING OF: TRANSISTOR BDX67A (VK3954) TERMINAL BLOCK HWBUN1736S10B (VK0574) POSITION 5 RESISTOR 5905-99-0135626 POSITION 6 RESISTOR 5905-99-0135622 (VK0064))		1
TA-AA	HWBUN1146D5B	.TERMINAL BLOCK- (VK0574)		1
TA-AB	HWBUN1146D5B	.TERMINAL BLOCK- (VK0574)		1
U	140-4537	.POTENTIOMETER- (VK1021)		1
U-DAE	25-8NF409-503A	.HEAT SINK ASSY- (COMPRISING OF: TRANSISTOR BDX67A (VK3954) TERMINAL BLOCK HWBUN1736S10B (VK0574) POSITION 1 RESISTOR 5905-99-0135622 POSITION 2 RESISTOR 5905 99-0135626 (VK0064))		1
W-CA	702-4584	.POTENTIOMETER-DUAL (VK1021)		1
X-CA	702-4584	.POTENTIOMETER-DUAL (VK1021)		1
Y-CC	HWBUN1736D10B	.TERMINAL BLOCK- (VK0574)		1
		MISSING ITEM NO. NOT APPLICABLE		

– ITEM NOT ILLUSTRATED

IDENT	PART NUMBER	1234567 NOMENCLATURE	EFFECT FROM TO	UNITS PER ASSY
Y-DAE	25-8NF397-503A	.HEAT SINK ASSY- (COMPRISING OF: TRANSISTORS BDX66A BDX67A (VK3954) TERMINAL BLOCK HWBUN1736S10B (VK0574) POSITION 1 RESISTOR 5905-99-0135638 POSITION 2 RESISTOR 5905-99-0135666 POSITION 5 RESISTOR 5905-99-0135666 POSITION 3 RESISTOR 5905-99-0135626 POSITION 4 RESISTOR 5905-99-0135626 POSITION 6 RESISTOR 5905-99-0135647 (VK0064))		1
Y2-DAB	MRTB20E04-111	.TERMINAL JUNCTION MODULE- (V14283)		1
		MISSING ITEM NO. NOT APPLICABLE		

– ITEM NOT ILLUSTRATED

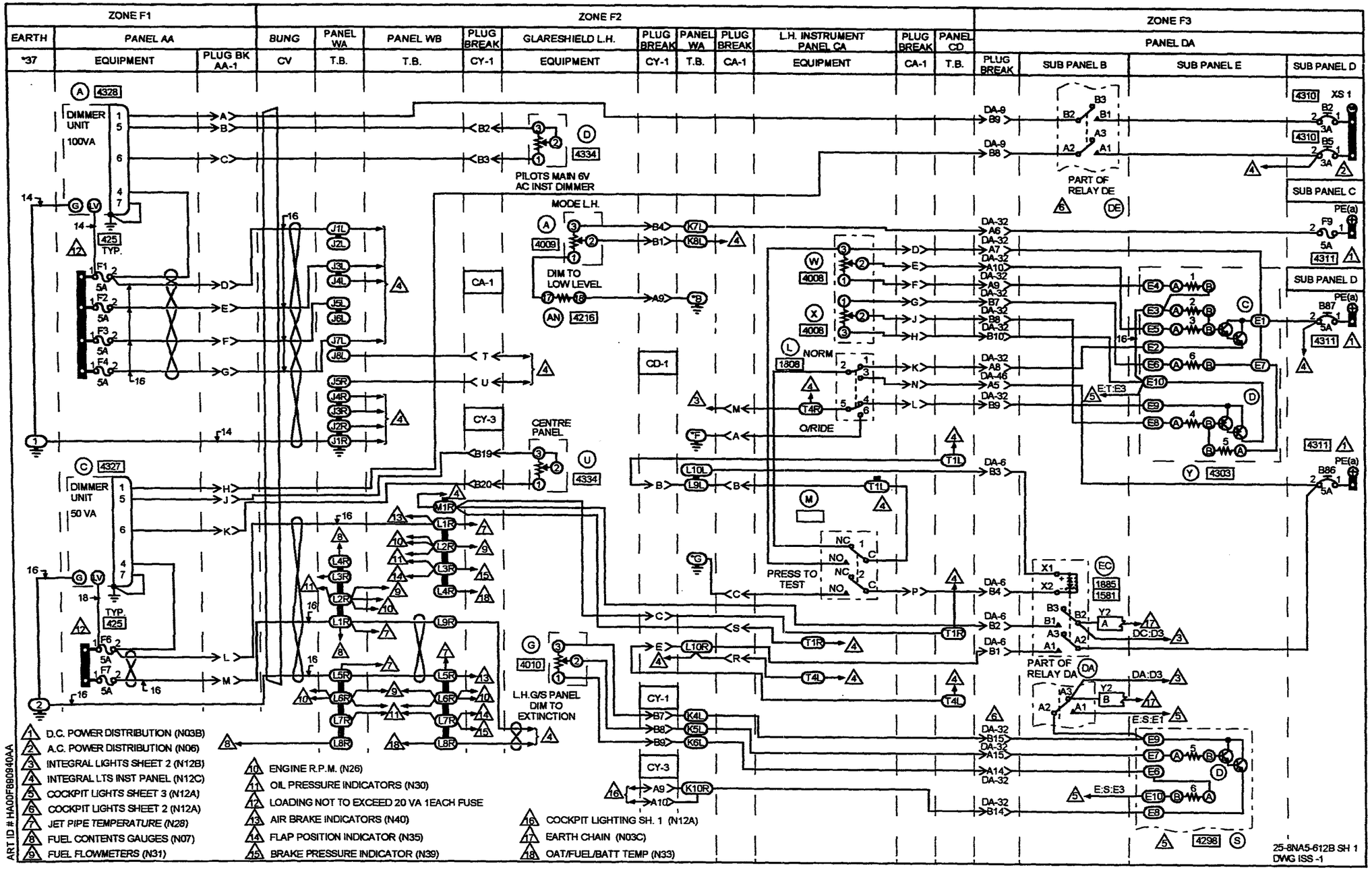
ZONE F1
EARTH
PANEL AA
EQUIPMENT
PLUG BK AA-1
ZONE F2
BUNG
PANEL WA
PANEL WB
PLUG BREAK
GLARESHIELD L.H.
L.H. INSTRUMENT PANEL CA
PANEL CD
ZONE F3
PANEL DA
PLUG BREAK
SUB PANEL B
SUB PANEL E
SUB PANEL D
SUB PANEL C
DIMMER UNIT
100VA
50 VA
PILOTS MAIN 6V AC INST DIMMER
MODE L.H.
DIM TO LOW LEVEL
CENTRE PANEL
L.H.G/S PANEL DIM TO EXTINCTION
NORM
O/RIDE
PRESS TO TEST
PART OF RELAY DE
PART OF RELAY DA
D.C. POWER DISTRIBUTION (N03B)
A.C. POWER DISTRIBUTION (N06)
INTEGRAL LIGHTS SHEET 2 (N12B)
INTEGRAL LTS INST PANEL (N12C)
COCKPIT LIGHTS SHEET 3 (N12A)
COCKPIT LIGHTS SHEET 2 (N12A)
JET PIPE TEMPERATURE (N28)
FUEL CONTENTS GAUGES (N07)
FUEL FLOWMETERS (N31)
ENGINE R.P.M. (N26)
OIL PRESSURE INDICATORS (N30)
LOADING NOT TO EXCEED 20 VA 1EACH FUSE
AIR BRAKE INDICATORS (N40)
FLAP POSITION INDICATOR (N35)
BRAKE PRESSURE INDICATOR (N39)
COCKPIT LIGHTING SH. 1 (N12A)
EARTH CHAIN (N03C)
OAT/FUEL/BATT TEMP (N33)
ART ID # HA00F880940AA
25-8NA5-612B SH 1
DWG ISS -1

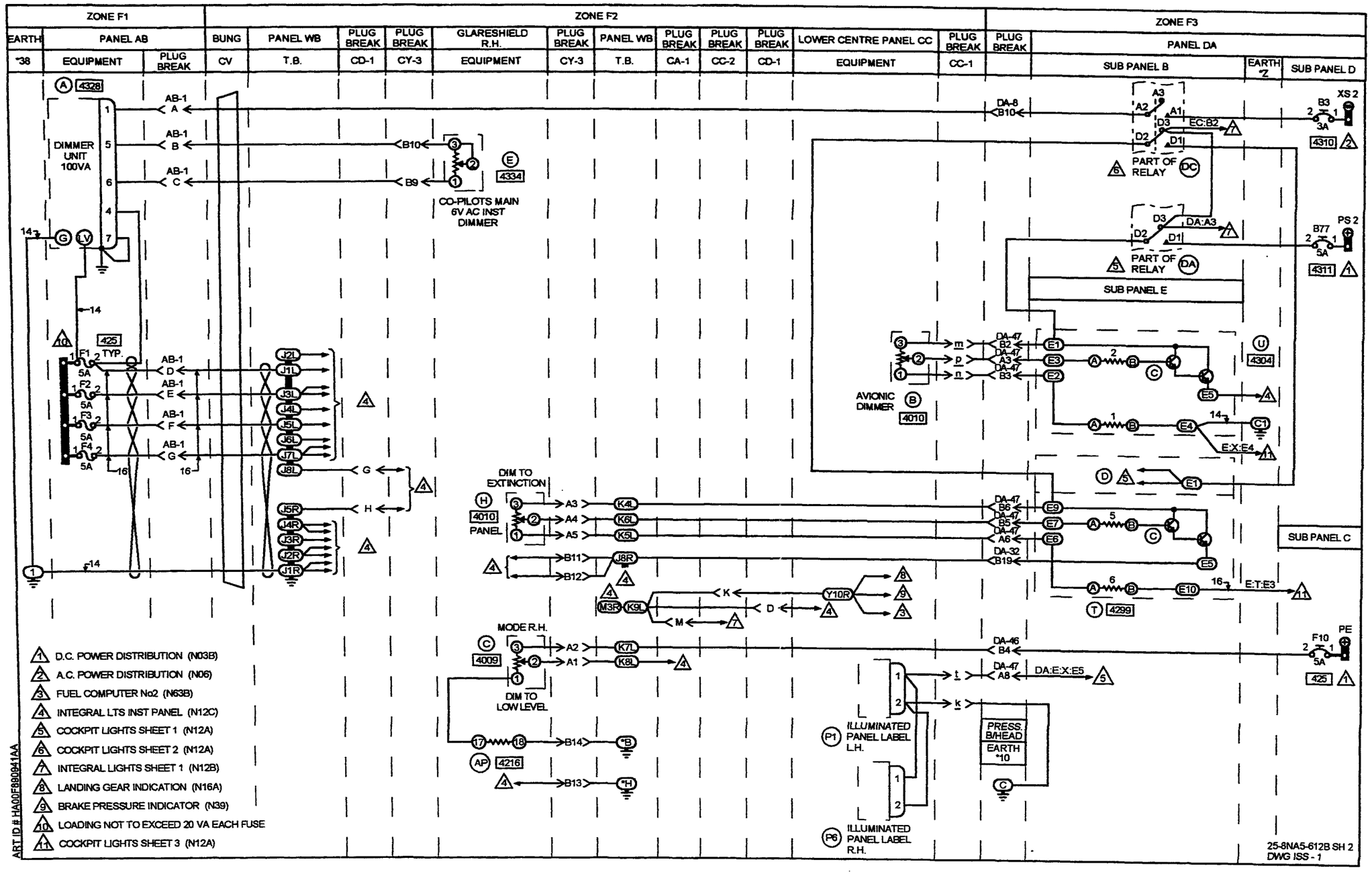
ZONE F1
EARTH *38
PANEL AB
EQUIPMENT
PLUG BREAK
ZONE F2
BUNG CV
PANEL WB T.B.
PLUG BREAK CD-1
PLUG BREAK CY-3
GLARESHIELD R.H. EQUIPMENT
PLUG BREAK CY-3
PANEL WB T.B.
PLUG BREAK CA-1
PLUG BREAK CC-2
PLUG BREAK CD-1
LOWER CENTRE PANEL CC EQUIPMENT
PLUG BREAK CC-1
ZONE F3
PLUG BREAK
PANEL DA
SUB PANEL B
EARTH *Z
SUB PANEL D
DIMMER UNIT 100VA
CO-PILOTS MAIN 6V AC INST DIMMER
PART OF RELAY
SUB PANEL E
AVIONIC DIMMER
DIM TO EXTINCTION
PANEL
MODE R.H.
DIM TO LOW LEVEL
ILLUMINATED PANEL LABEL L.H.
ILLUMINATED PANEL LABEL R.H.
PRESS. B/HEAD
EARTH *10
SUB PANEL C
1 D.C. POWER DISTRIBUTION (N03B)
2 A.C. POWER DISTRIBUTION (N06)
3 FUEL COMPUTER No2 (N63B)
4 INTEGRAL LTS INST PANEL (N12C)
5 COCKPIT LIGHTS SHEET 1 (N12A)
6 COCKPIT LIGHTS SHEET 2 (N12A)
7 INTEGRAL LIGHTS SHEET 1 (N12B)
8 LANDING GEAR INDICATION (N16A)
9 BRAKE PRESSURE INDICATOR (N39)
10 LOADING NOT TO EXCEED 20 VA EACH FUSE
11 COCKPIT LIGHTS SHEET 3 (N12A)
ART ID # HA00F890941AA
25-8NA5-612B SH 2
DWG ISS - 1

IDENT	PART NUMBER	1234567 NOMENCLATURE	EFFECT FROM TO	UNITS PER ASSY
		SUPPLIES FOR INTEGRAL LIGHTS	132163 166166 168176	
	25-8NA5-612B	WIRING DIAGRAM- (MOD 253191A)		RF
A	140-4537	.POTENTIOMETER- (VK1021)		1
A-AA	D492-05-001	.DIMMER UNIT-100VA (VK0673) (MOD 257670A) (SEE VENDOR MOD AR1477)		1
A-AA-R	LS10215R12-12SN	.CONNECTOR-SOCKET (VK1793)		1
A-AB	D492-05-001	.DIMMER UNIT-100VA (VK0673) (MOD 257670A) (SEE VENDOR MOD AR1477)		1
A-AB-R	LS10215R12-12SN	.CONNECTOR-SOCKET (VK1793)		1
AA1-P	BAEREF000004167	.CONNECTOR-SOCKET (6027-20-16SNCONDD (VK1793))		1
AA1-R	BAEREF000003937	.CONNECTOR-PIN (6026-20-16PNCONDD (VK1793))		1
AB1-P	BAEREF000004167	.CONNECTOR-SOCKET (6027-20-16SNCONDD (VK1793))		1
AB1-R	BAEREF000003937	.CONNECTOR-PIN (6026-20-16PNCONDD (VK1793))		1
AN	TR5-680R	.RESISTOR-2PCT (VK4184) (OPT MR5-680R (VK0064)) (OPT MO5-680R (VK4265))		1
AP	TR5-680R	.RESISTOR-2PCT (VK4184) (OPT MR5-680R (VK0064)) (OPT MO5-680R (VK4265))		1
B-CC	D38IN5K500RLIN	.POTENTIOMETER-AVIONIC DIMMER (VK0064)		1
B2-DAD	483TCG11J25-3A	.CIRCUIT BREAKER-3AMP (VU0091)		1
B3-DAD	483TCG11J25-3A	.CIRCUIT BREAKER-3AMP (VU0091)		1
		MISSING ITEM NO. NOT APPLICABLE		

– ITEM NOT ILLUSTRATED

IDENT	PART NUMBER	1234567 NOMENCLATURE	EFFECT FROM TO	UNITS PER ASSY
B5-DAD	483TCG11J25-3A	.CIRCUIT BREAKER-3AMP (VU0091)		1
B77-DAD	483TCG11J25-5A	.CIRCUIT BREAKER-5AMP (VU0091)		1
B86-DAD	483TCG11J25-5A	.CIRCUIT BREAKER-5AMP (VU0091)		1
B87-DAD	483TCG11J25-5A	.CIRCUIT BREAKER-5AMP (VU0091)		1
C	140-4537	.POTENTIOMETER- (VK1021)		1
C-AA	D492-04-001	.DIMMER UNIT-50VA (VK0673)		1
C-AA-R	LS10215R12-12SN	.CONNECTOR-SOCKET (VK1793)		1
C-T-DAE	BDX67A	.TRANSISTOR- (VK3954) (USED ON 25-8NF407-503A)		1
C-U-DAE	BDX67A	.TRANSISTOR- (VK3954) (USED ON 25-8NF409-503A)		1
C-Y-DAE	BDX67A	.TRANSISTOR- (VK3954) (USED ON 25-8NF397-503A)		1
CA1-P	BAEREF000004326	.CONNECTOR-SOCKET (6027-16-26SNCONDB (VK1793)) (USED WITH OUTLET: GTR71-16NACS1 (VU0419))		1
CA1-R	BAEREF000003120	.CONNECTOR-PIN (6026-16-26PNCONDB (VK1793)) (USED WITH OUTLET: GTR62-16NACS1 (VU0419))		1
CC1-P	BAEREF000004350	.CONNECTOR-SOCKET (6027-20-41SNCONDA (VK1793)) (USED WITH OUTLET: GTR62-20NACS1 (VU0419))		1
CC1-R	6026-20-41PN	.CONNECTOR-PIN (VK4161) (USED WITH OUTLET: GTR62-20NACS1 (VU0419))		1
		MISSING ITEM NO. NOT APPLICABLE		

- ITEM NOT ILLUSTRATED

IDENT	PART NUMBER	1234567 NOMENCLATURE	EFFECT FROM TO	UNITS PER ASSY
CC2-P	BAEREF000004392	.CONNECTOR-SOCKET (6027-20-41SWCONDA (VK1793)) (USED WITH OUTLET: GTR62-20NACS1 (VU0419))		1
CC2-R	6026-20-41PW	.CONNECTOR-PIN (VK4161) (USED WITH OUTLET: GTR62-20NACS1 (VU0419)) (REF DWG 25-8NF593)		1
CD1-P	BAEREF000004349	.CONNECTOR-SOCKET (6027-14-19SNCONDA (VK1793)) (USED WITH OUTLET: GTR71-16NACS1 (VU0419))		1
CD1-R	BAEREF000003282	.CONNECTOR-PIN (6026-14-19PNCONDB (VK1793)) (USED WITH OUTLET: GTR62-14NACS1 (VU0419))		1
CV	422253-15	.BUNG- (VK1793)		1
CY1-P	MTC100YH2-009	.SHELL-PLUG (VK1010) (USED WITH WAFERS: TYPE A, MTC100KT2-1103 TYPE B, MTC100KT2-1104)		1
CY1-R	MTC100YH2-010	.SHELL-RECEPTACLE (VK1010) (USED WITH WAFERS: TYPE A, MTC100KT2-1101 TYPE B, MTC100KT2-1102)		1
CY3-P	MTC100YH2-009	.SHELL-PLUG (VK1010) (USED WITH WAFERS: TYPE A, MTC100KT2-1103 TYPE B, MTC100KT2-1104)		1
CY3-R	MTC100YH2-010	.SHELL-RECEPTACLE (VK1010) (USED WITH WAFERS: TYPE A, MTC100KT2-1101 TYPE B, MTC100KT2-1102)		1
D	404-8-02811-007	.POTENTIOMETER- (V+2510)		1
		MISSING ITEM NO. NOT APPLICABLE		

– ITEM NOT ILLUSTRATED

IDENT	PART NUMBER	1234567 NOMENCLATURE	EFFECT FROM TO	UNITS PER ASSY
D-S-DAE	BDX67A	.TRANSISTOR- (VK3954) (USED ON 25-8NF405-503A)		1
D-Y-DAE	BDX66A	.TRANSISTOR- (VK3954) (USED ON 25-8NF397-503A)		1
DA-DAB	M400-1265	.RELAY- (VK6265) (USED WITH SOCKET: M12883-40-19 (V81349))		1
DA32-P	MTC100YH2-009	.SHELL-PLUG (VK1010) (USED WITH WAFERS: TYPE A, MTC100KT2-1101 TYPE B, MTC100KT2-1102)		1
DA32-R	MTC100YH2-010	.SHELL-RECEPTACLE (VK1010) (USED WITH WAFERS: TYPE A, MTC100KT2-1103 TYPE B, MTC100KT2-1104)		1
DA46-P	MTC100YH1-003	.SHELL-PLUG (VK1010) (USED WITH WAFERS: TYPE A, MTC100KT1-1101 TYPE B, MTC100KT1-1102)		1
DA46-R	MTC100YH1-004	.SHELL-RECEPTACLE (VK1010) (USED WITH WAFERS: TYPE A, MTC100KT1-1103 TYPE B, MTC100KT1-1104)		1
DA47-P	MTC100YH1-003	.SHELL-PLUG (VK1010) (USED WITH WAFERS: TYPE A, MTC100KT1-1101 TYPE B, MTC100KT1-1102)		1
DA47-R	MTC100YH1-004	.SHELL-RECEPTACLE (VK1010) (USED WITH WAFERS: TYPE A, MTC100KT1-1103 TYPE B, MTC100KT1-1104)		1
DA6-P	MTC100YH2-009	.SHELL-PLUG (VK1010) (USED WITH WAFERS: TYPE A, MTC100KT2-1101 TYPE B, MTC100KT2-1102)		1
		MISSING ITEM NO. NOT APPLICABLE		

- ITEM NOT ILLUSTRATED

IDENT	PART NUMBER	1234567 NOMENCLATURE	EFFECT FROM TO	UNITS PER ASSY
DA6-R	MTC100YH2-010	.SHELL-RECEPTACLE (VK1010) (USED WITH WAFERS: TYPE A, MTC100KT2-1103 TYPE B, MTC100KT2-1104)		1
DA8-P	MTC100YH1-003	.SHELL-PLUG (VK1010) (USED WITH WAFERS: TYPE A, MTC100KT1-1101 TYPE B, MTC100KT1-1102)		1
DA8-R	MTC100YH1-004	.SHELL-RECEPTACLE (VK1010) (USED WITH WAFERS: TYPE A, MTC100KT1-1103 TYPE B, MTC100KT1-1104)		1
DA9-P	MTC100YH1-003	.SHELL-PLUG (VK1010) (USED WITH WAFERS: DUMMY, MTCX1X100-100 TYPE B, MTC100KT1-1102)		1
DA9-R	MTC100YH1-004	.SHELL-RECEPTACLE (VK1010) (USED WITH WAFERS: DUMMY, MTCX1X100-100 TYPE B, MTC100KT1-1104)		1
DC-DAB	M400-1265	.RELAY- (VK6265) (USED WITH SOCKET: M12883-40-19 (V81349))		1
DE-DAB	M400-1265	.RELAY- (VK6265) (USED WITH SOCKET: M12883-40-19 (V81349))		1
E	404-8-02811-007	.POTENTIOMETER- (V+2510)		1
E-S-DAE	HWBUN1736S10B	.TERMINAL BLOCK- (VK0574) (USED ON 25-8NF405-503A)		1
E-T-DAE	HWBUN1736S10B	.TERMINAL BLOCK- (VK0574) (USED ON 25-8NF407-503A)		1
E-U-DAE	HWBUN1736S10B	.TERMINAL BLOCK- (VK0574) (USED ON 25-8NF409-503A)		1
E-Y-DAE	HWBUN1736S10B	.TERMINAL BLOCK- (VK0574) (USED ON 25-8NF397-503A)		1
		MISSING ITEM NO. NOT APPLICABLE		

– ITEM NOT ILLUSTRATED

IDENT	PART NUMBER	1234567 NOMENCLATURE	EFFECT FROM TO	UNITS PER ASSY
EC-DAB	M300-1264	.RELAY- (VK6265) (USED WITH SOCKET: M12883-41-16 (V81349))		1
F1-AA	5920-99-0120076	.FUSE-5AMP (VK0657)		1
F1-AB	5920-99-0120076	.FUSE-5AMP (VK0657)		1
F10-DAC	5920-99-0120076	.FUSE-5AMP (VK0657)		1
F2-AA	5920-99-0120076	.FUSE-5AMP (VK0657)		1
F2-AB	5920-99-0120076	.FUSE-5AMP (VK0657)		1
F3-AA	5920-99-0120076	.FUSE-5AMP (VK0657)		1
F3-AB	5920-99-0120076	.FUSE-5AMP (VK0657)		1
F4-AA	5920-99-0120076	.FUSE-5AMP (VK0657)		1
F4-AB	5920-99-0120076	.FUSE-5AMP (VK0657)		1
F6-AA	5920-99-0120076	.FUSE-5AMP (VK0657)		1
F7-AA	5920-99-0120076	.FUSE-5AMP (VK0657)		1
F9-DAC	5920-99-0120076	.FUSE-5AMP (VK0657)		1
G	140-4538	.POTENTIOMETER- (VK1021)		1
H	140-4538	.POTENTIOMETER- (VK1021)		1
J-WA	72444-030-0AV2	.TERMINAL BLOCK- (VK0574)		1
J-WB	72444-030-0AV2	.TERMINAL BLOCK- (VK0574)		1
K-WA	72444-030-0AV2	.TERMINAL BLOCK- (VK0574)		1
K-WB	72444-030-0AV2	.TERMINAL BLOCK- (VK0574)		1
L-CA	6AT4	.SWITCH- (V91929) (OPT (VK6596))		1
L-WA	72444-030-0AV2	.TERMINAL BLOCK- (VK0574)		1
L-WB	72444-030-0AV2	.TERMINAL BLOCK- (VK0574)		1
		MISSING ITEM NO. NOT APPLICABLE		

– ITEM NOT ILLUSTRATED

IDENT	PART NUMBER	1234567 NOMENCLATURE	EFFECT FROM TO	UNITS PER ASSY
M-CA	2D2	.SWITCH MODULE- (V91929) (OPT (VK6596)) (COMPRISING OF: SWITCH 6A43)		1
M-WB	72444-030-0AV2	.TERMINAL BLOCK- (VK0574)		1
P1-CC	25-8MC241-1A	.ILLUMINATED PANEL- LABEL ASSY,LH (VK0400)		1
P1-CC-R	SCA11108-02	.CONNECTOR-RECEPTACLE (VU2255)		1
P6-CC	25-8MC535-1A	.ILLUMINATED PANEL- LABEL ASSY,RH (VK0400)		1
P6-CC-R	SCA11108-02	.CONNECTOR-RECEPTACLE (VU2255)		1
S-DAE	25-8NF405-503A	.HEAT SINK ASSY- (COMPRISING OF: TRANSISTOR BDX67A (VK3954) TERMINAL BLOCK HWBUN1736S10B (VK0574) POSITION 5A/5B RESISTOR 5905-99-0135626 POSITION 6A/6B RESISTOR 5905-99-0135622 (VK0064))		1
T-CA	HWBUN1736D6B	.TERMINAL BLOCK- (VK0574)		1
T-CD	HWBUN1736D6B	.TERMINAL BLOCK- (VK0574)		1
T-DAE	25-8NF407-503A	.HEAT SINK ASSY- (COMPRISING OF: TRANSISTOR BDX67A (VK3954) TERMINAL BLOCK HWBUN1736S10B (VK0574) POSITION 5A/5B RESISTOR 5905-99-0135626 POSITION 6A/6B RESISTOR 5905-99-0135622 (VK0064))		1
U	404-8-02811-007	.POTENTIOMETER- (V+2510)		1
		MISSING ITEM NO. NOT APPLICABLE		

– ITEM NOT ILLUSTRATED

IDENT	PART NUMBER	1234567 NOMENCLATURE	EFFECT FROM TO	UNITS PER ASSY
U-DAE	25-8NF409-503A	.HEAT SINK ASSY- (COMPRISING OF: TRANSISTOR BDX67A (VK3954) TERMINAL BLOCK HWBUN1736S10B (VK0574) POSITION 1A/1B RESISTOR 5905-99-0135622 POSITION 2A/2B RESISTOR 5905 99-0135626 (VK0064))		1
W-CA	702-4584	.POTENTIOMETER-DUAL (VK1021)		1
X-CA	702-4584	.POTENTIOMETER-DUAL (VK1021)		1
Y-CC	HWBUN1736D10B	.TERMINAL BLOCK- (VK0574)		1
Y-DAE	25-8NF397-503A	.HEAT SINK ASSY- (COMPRISING OF: TRANSISTOR BDX66A TRANSISTOR BDX67A (VK3954) TERMINAL BLOCK HWBUN1736S10B (VK0574) POSITION 1A/1B RESISTOR 5905-99-0135638 POSITION 2A/2B RESISTOR 5905-99-0135666 POSITION 3A/3B RESISTOR 5905-99-0135626 POSITION 4A/4B RESISTOR 5909-99-0135626 POSITION 5A/5B RESISTOR 5905-99-0135666 POSITION 6A/6B RESISTOR 5905-99-0135647 (VK0064))		1
Y2-DAB	MRTB20E04-111	.TERMINAL JUNCTION MODULE- (V14283)		1
		MISSING ITEM NO. NOT APPLICABLE		

– ITEM NOT ILLUSTRATED

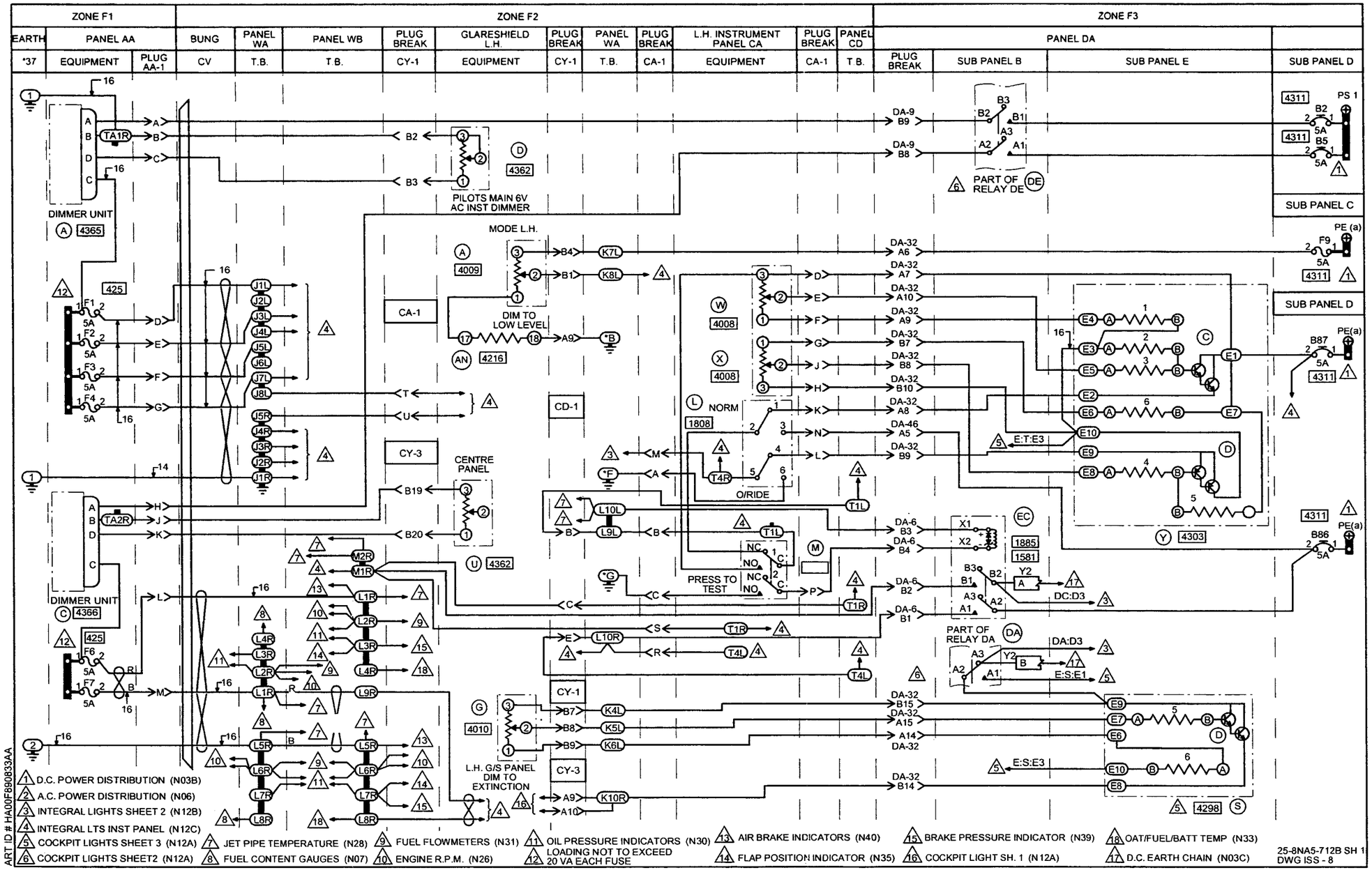
ZONE F1
ZONE F2
ZONE F3
EARTH
PANEL AA
BUNG
PANEL WA
PANEL WB
PLUG BREAK
GLARESHIELD L.H.
L.H. INSTRUMENT PANEL CA
PANEL CD
PANEL DA
*37
EQUIPMENT
PLUG AA-1
CV
T.B.
CY-1
CA-1
PLUG BREAK
SUB PANEL B
SUB PANEL E
SUB PANEL D
SUB PANEL C
DIMMER UNIT
PILOTS MAIN 6V AC INST DIMMER
MODE L.H.
DIM TO LOW LEVEL
CENTRE PANEL
NORM
O/RIDE
PRESS TO TEST
PART OF RELAY DE
PART OF RELAY DA
L.H. G/S PANEL DIM TO EXTINCTION
PS 1
PE (a)
1 D.C. POWER DISTRIBUTION (N03B)
2 A.C. POWER DISTRIBUTION (N06)
3 INTEGRAL LIGHTS SHEET 2 (N12B)
4 INTEGRAL LTS INST PANEL (N12C)
5 COCKPIT LIGHTS SHEET 3 (N12A)
6 COCKPIT LIGHTS SHEET2 (N12A)
7 JET PIPE TEMPERATURE (N28)
8 FUEL CONTENT GAUGES (N07)
9 FUEL FLOWMETERS (N31)
10 ENGINE R.P.M. (N26)
11 OIL PRESSURE INDICATORS (N30)
12 LOADING NOT TO EXCEED 20 VA EACH FUSE
13 AIR BRAKE INDICATORS (N40)
14 FLAP POSITION INDICATOR (N35)
15 BRAKE PRESSURE INDICATOR (N39)
16 COCKPIT LIGHT SH. 1 (N12A)
17 D.C. EARTH CHAIN (N03C)
18 OAT/FUEL/BATT TEMP (N33)
ART ID # HA00F890833AA
25-8NA5-712B SH 1
DWG ISS - 8

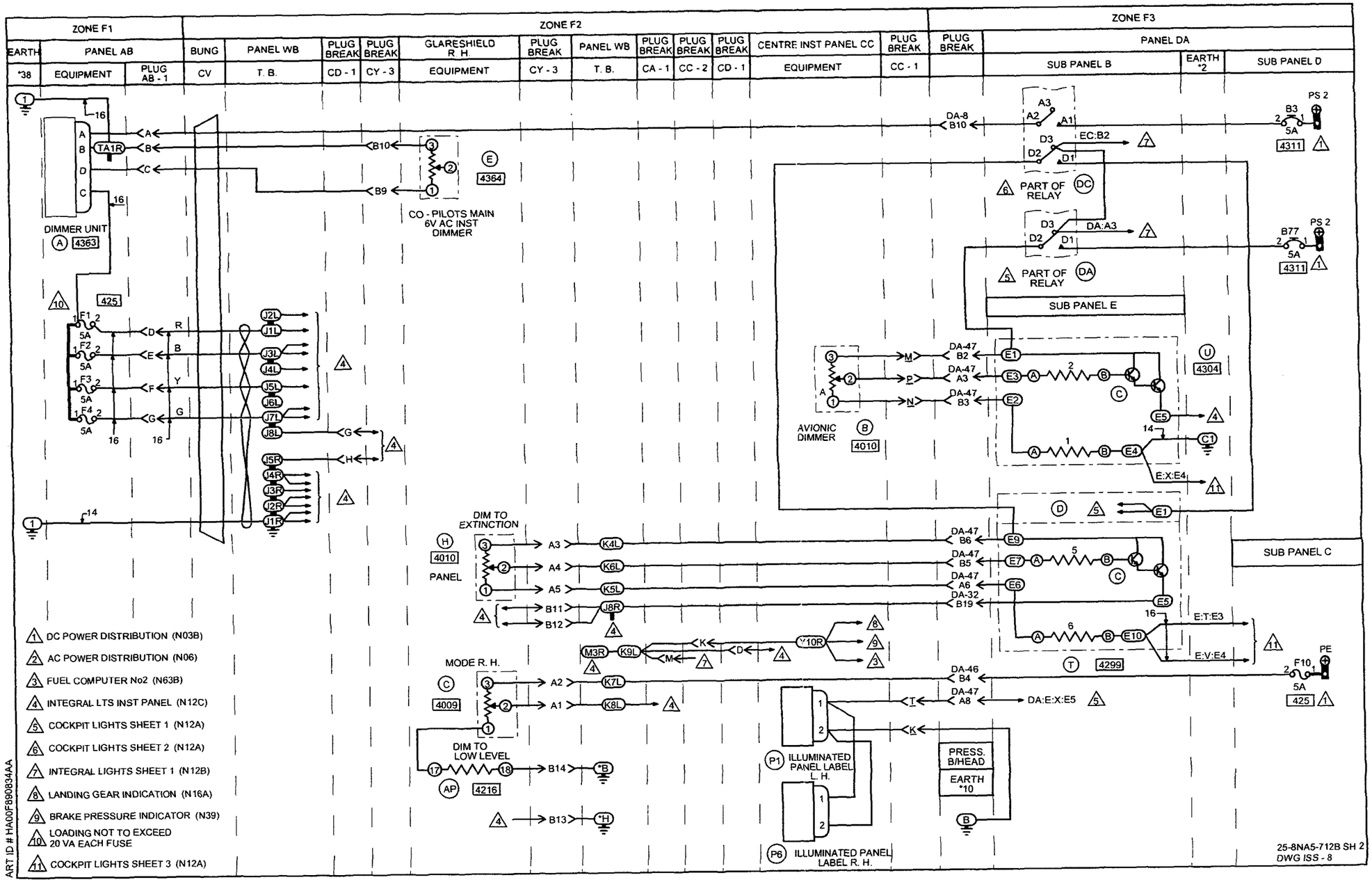
ZONE F1
ZONE F2
ZONE F3
EARTH *38
PANEL AB
EQUIPMENT
PLUG AB - 1
BUNG CV
PANEL WB T. B.
PLUG BREAK CD - 1
PLUG BREAK CY - 3
GLARESHIELD R. H. EQUIPMENT
PLUG BREAK CY - 3
PANEL WB T. B.
PLUG BREAK CA - 1
PLUG BREAK CC - 2
PLUG BREAK CD - 1
CENTRE INST PANEL CC EQUIPMENT
PLUG BREAK CC - 1
PLUG BREAK
PANEL DA
SUB PANEL B
EARTH *2
SUB PANEL D
DIMMER UNIT
4363
CO - PILOTS MAIN 6V AC INST DIMMER
4364
PART OF RELAY
SUB PANEL E
AVIONIC DIMMER
4010
4304
SUB PANEL C
DIM TO EXTINCTION
PANEL
MODE R. H.
4009
DIM TO LOW LEVEL
4216
ILLUMINATED PANEL LABEL L. H.
ILLUMINATED PANEL LABEL R. H.
PRESS. B/HEAD
EARTH *10
4299
425
4311
1 DC POWER DISTRIBUTION (N03B)
2 AC POWER DISTRIBUTION (N06)
3 FUEL COMPUTER No2 (N63B)
4 INTEGRAL LTS INST PANEL (N12C)
5 COCKPIT LIGHTS SHEET 1 (N12A)
6 COCKPIT LIGHTS SHEET 2 (N12A)
7 INTEGRAL LIGHTS SHEET 1 (N12B)
8 LANDING GEAR INDICATION (N16A)
9 BRAKE PRESSURE INDICATOR (N39)
10 LOADING NOT TO EXCEED 20 VA EACH FUSE
11 COCKPIT LIGHTS SHEET 3 (N12A)
ART ID # HA00F890834AA
25-8NA5-712B SH 2
DWG ISS - 8

IDENT	PART NUMBER	1234567 NOMENCLATURE	EFFECT FROM TO	UNITS PER ASSY
		SUPPLIES FOR INTEGRAL LIGHTS	164165 167167 177179 181221 244245 253257 259276	
	25-8NA5-712B	WIRING DIAGRAM- (MOD 253247A) (MOD 25F505A)		RF
A	140-4537	.POTENTIOMETER- (VK1021)		1
A-AA	LT52A	.DIMMER UNIT- (V16017)		1
A-AA-R	BAEREF000004218	.CONNECTOR-SOCKET (6026-14-5SNCONDD (VK1793)) (OPT KPT06B14-5S (V71468) (OPT (VK0316)))		1
A-AB	LT52A	.DIMMER UNIT- (V16017)		1
A-AB-R	BAEREF000004218	.CONNECTOR-SOCKET (6026-14-5SNCONDD (VK1793)) (OPT KPT06B14-5S (V71468) (OPT (VK0316)))		1
AA1-P	BAEREF000004167	.CONNECTOR-SOCKET (6027-20-16SNCONDD (VK1793))		1
AA1-R	BAEREF000003937	.CONNECTOR-PIN (6026-20-16PNCONDD (VK1793))		1
AB1-P	BAEREF000004167	.CONNECTOR-SOCKET (6027-20-16SNCONDD (VK1793))		1
AB1-R	BAEREF000003937	.CONNECTOR-PIN (6026-20-16PNCONDD (VK1793))		1
AN	TR5-680R	.RESISTOR-2PCT (VK4184) (OPT MR5-680R (VK0064)) (OPT MO5-680R (VK4265))		1
		MISSING ITEM NO. NOT APPLICABLE		

- ITEM NOT ILLUSTRATED

IDENT	PART NUMBER	1234567 NOMENCLATURE	EFFECT FROM TO	UNITS PER ASSY
AP	TR5-680R	.RESISTOR-2PCT (VK4184) (OPT MR5-680R (VK0064)) (OPT MO5-680R (VK4265))		1
B-CC	D38IN5K500RLIN	.POTENTIOMETER-AVIONIC DIMMER (VK0064)		1
B2-DAD	483TCG11J25-5A	.CIRCUIT BREAKER-5AMP (VU0091)		1
B3-DAD	483TCG11J25-5A	.CIRCUIT BREAKER-5AMP (VU0091)		1
B5-DAD	483TCG11J25-5A	.CIRCUIT BREAKER-5AMP (VU0091)		1
B77-DAD	483TCG11J25-5A	.CIRCUIT BREAKER-5AMP (VU0091)		1
B86-DAD	483TCG11J25-5A	.CIRCUIT BREAKER-5AMP (VU0091)		1
B87-DAD	483TCG11J25-5A	.CIRCUIT BREAKER-5AMP (VU0091)		1
C	140-4537	.POTENTIOMETER- (VK1021)		1
C-AA	LT52A	.DIMMER UNIT- (V16017)		1
C-AA-R	BAEREF000004218	.CONNECTOR-SOCKET (6026-14-5SNCONDD (VK1793)) (OPT KPT06B14-5S (V71468) (OPT (VK0316)))		1
C-T-DAE	BDX67A	.TRANSISTOR- (VK3954)		1
C-U-DAE	BDX67A	.TRANSISTOR- (VK3954)		1
C-Y-DAE	BDX67A	.TRANSISTOR- (VK3954)		1
CA1-P	BAEREF000004326	.CONNECTOR-SOCKET (6027-16-26SNCONDB (VK1793)) (USED WITH OUTLET: GTR71-16NACS1 (VU0419))		1
CA1-R	BAEREF000003120	.CONNECTOR-PIN (6026-16-26PNCONDB (VK1793)) (USED WITH OUTLET: GTR62-16NACS1 (VU0419))		1
		MISSING ITEM NO. NOT APPLICABLE		

– ITEM NOT ILLUSTRATED

IDENT	PART NUMBER	1234567 NOMENCLATURE	EFFECT FROM TO	UNITS PER ASSY
CC1-P	BAEREF000004350	.CONNECTOR-SOCKET (6027-20-41SNCONDA (VK1793)) (USED WITH OUTLET: GTR62-20NACS1 (VU0419))		1
CC1-R	6026-20-41PN	.CONNECTOR-PIN (VK4161) (USE WITH OUTLET: GTR62-20NACS1 (VU0419))		1
CC2-P	BAEREF000004392	.CONNECTOR-SOCKET (6027-20-41SWCONDA (VK1793)) (USED WITH OUTLET: GTR62-20NACS1 (VU0419))		1
CC2-R	6026-20-41PW	.CONNECTOR-PIN (VK4161) (USE WITH OUTLET: GTR62-20NACS1 (VU0419)) (REF DWG 25-8NF593)		1
CD1-P	BAEREF000004349	.CONNECTOR-SOCKET (6027-14-19SNCONDA (VK1793)) (USED WITH OUTLET: GTR71-16NACS1 (VU0419))		1
CD1-R	BAEREF000003282	.CONNECTOR-PIN (6026-14-19PNCONDB (VK1793)) (USE WITH OUTLET: GTR62-14NACS1 (VU0419))		1
CV	422253-15	.BUNG- (VK1793)		1
CY1-P	MTC100YH2-009	.SHELL-PLUG (VK1010) (USED WITH WAFERS: TYPE A, MTC100KT2-1103 TYPE B, MTC100KT2-1104)	164165 167167 177179 181221 244245 253254	1
CY1-P	MTC100YH2-009	.SHELL-PLUG (VK1010) (USED WITH INSERTS: PRIMARY MTC100YC1-003 SECONDARY MTC100YC1-004)	255257 259276	1
		MISSING ITEM NO. NOT APPLICABLE		

– ITEM NOT ILLUSTRATED

IDENT	PART NUMBER	1234567 NOMENCLATURE	EFFECT FROM TO	UNITS PER ASSY
CY1-R	MTC100YH2-010	.SHELL-RECEPTACLE (VK1010) (USED WITH WAFERS: TYPE A, MTC100KT2-1101 TYPE B, MTC100KT2-1102)	164165 167167 177179 181221 244245 253254	1
CY1-R	MTC100YH2-010	.SHELL-RECEPTACLE (VK1010) (USED WITH INSERTS: PRIMARY MTC100YC1-001 SECONDARY MTC100YC1-002)	255257 259276	1
CY3-P	MTC100YH2-009	.SHELL-PLUG (VK1010) (USED WITH WAFERS: TYPE A, MTC100KT2-1103 TYPE B, MTC100KT2-1104)	164165 167167 177179 181221 244245 253254	1
CY3-P	MTC100YH2-009	.SHELL-PLUG (VK1010) (USED WITH INSERTS: PRIMARY MTC100YC1-003 SECONDARY MTC100YC1-004)	255257 259276	1
CY3-R	MTC100YH2-010	.SHELL-RECEPTACLE (VK1010) (USED WITH WAFERS: TYPE A, MTC100KT2-1101 TYPE B, MTC100KT2-1102)	164165 167167 177179 181221 244245 253254	1
CY3-R	MTC100YH2-010	.SHELL-RECEPTACLE (VK1010) (USED WITH INSERTS: PRIMARY MTC100YC1-001 SECONDARY MTC100YC1-002)	255257 259276	1
D	140-4538	.POTENTIOMETER- (VK1021)		1
D-S-DAE	BDX67A	.TRANSISTOR- (VK3954)		1
D-Y-DAE	BDX66A	.TRANSISTOR- (VK3954)		1
DA-DAB	M400-1265	.RELAY- (VK6265) (USED WITH SOCKET: M12883-40-19 (V81349))		1
DA32-P	MTC100YH2-009	.SHELL-PLUG (VK1010) (USED WITH WAFERS: TYPE A, MTC100KT2-1101 TYPE B, MTC100KT2-1102)	164165 167167 177179 181221 244245 253254	1
		MISSING ITEM NO. NOT APPLICABLE		

– ITEM NOT ILLUSTRATED

IDENT	PART NUMBER	1234567 NOMENCLATURE	EFFECT FROM TO	UNITS PER ASSY
DA32-P	MTC100YH2-009	.SHELL-PLUG (VK1010) (USED WITH INSERTS: PRIMARY MTC100YC1-001 SECONDARY MTC100YC1-002)	255257 259276	1
DA32-R	MTC100YH2-010	.SHELL-RECEPTACLE (VK1010) (USED WITH WAFERS: TYPE A, MTC100KT2-1103 TYPE B, MTC100KT2-1104)	164165 167167 177179 181221 244245 253254	1
DA32-R	MTC100YH2-010	.SHELL-RECEPTACLE (VK1010) (USED WITH INSERTS: PRIMARY MTC100YC1-003 SECONDARY MTC100YC1-004)	255257 259276	1
DA46-P	MTC100YH1-003	.SHELL-PLUG (VK1010) (USED WITH WAFERS: TYPE A, MTC100KT1-1101 TYPE B, MTC100KT1-1102)	164165 167167 177179 181221 244245 253254	1
DA46-P	MTC100YH1-003	.SHELL-PLUG (VK1010) (USED WITH INSERT: MTC100YC1-005)	255257 259276	1
DA46-R	MTC100YH1-004	.SHELL-RECEPTACLE (VK1010) (USED WITH WAFERS: TYPE A, MTC100KT1-1103 TYPE B, MTC100KT1-1104)	164165 167167 177179 181221 244245 253254	1
DA46-R	MTC100YH1-004	.SHELL-RECEPTACLE (VK1010) (USED WITH INSERT: MTC100YC1-006)	255257 259276	1
DA47-P	MTC100YH1-003	.SHELL-PLUG (VK1010) (USED WITH WAFERS: TYPE A, MTC100KT1-1101 TYPE B, MTC100KT1-1102)	164165 167167 177179 181221 244245 253254	1
DA47-P	MTC100YH1-003	.SHELL-PLUG (VK1010) (USED WITH INSERT: MTC100YC1-005)	255257 259276	1
		MISSING ITEM NO. NOT APPLICABLE		

– ITEM NOT ILLUSTRATED

IDENT	PART NUMBER	1234567 NOMENCLATURE	EFFECT FROM TO	UNITS PER ASSY
DA47-R	MTC100YH1-004	.SHELL-RECEPTACLE (VK1010) (USED WITH WAFERS: TYPE A, MTC100KT1-1103 TYPE B, MTC100KT1-1104)	164165 167167 177179 181221 244245 253254	1
DA47-R	MTC100YH1-004	.SHELL-RECEPTACLE (VK1010) (USED WITH INSERT: MTC100YC1-006)	255257 259276	1
DA6-P	MTC100YH2-009	.SHELL-PLUG (VK1010) (USED WITH WAFERS: TYPE A, MTC100KT2-1101 TYPE B, MTC100KT2-1102)	164165 167167 177179 181221 244245 253254	1
DA6-P	MTC100YH2-009	.SHELL-PLUG (VK1010) (USED WITH INSERTS: PRIMARY MTC100YC1-001 SECONDARY MTC100YC1-002)	255257 259276	1
DA6-R	MTC100YH2-010	.SHELL-RECEPTACLE (VK1010) (USED WITH WAFERS: TYPE A, MTC100KT2-1103 TYPE B, MTC100KT2-1104)	164165 167167 177179 181221 244245 253254	1
DA6-R	MTC100YH2-010	.SHELL-RECEPTACLE (VK1010) (USED WITH INSERTS: PRIMARY MTC100YC1-003 SECONDARY MTC100YC1-004)	255257 259276	1
DA8-P	MTC100YH1-003	.SHELL-PLUG (VK1010) (USED WITH WAFERS: TYPE A, MTC100KT1-1101 TYPE B, MTC100KT1-1102)	164165 167167 177179 181221 244245 253254	1
DA8-P	MTC100YH1-003	.SHELL-PLUG (VK1010) (USED WITH INSERT: MTC100YC1-005)	255257 259276	1
DA8-R	MTC100YH1-004	.SHELL-RECEPTACLE (VK1010) (USED WITH WAFERS: TYPE A, MTC100KT1-1103 TYPE B, MTC100KT1-1104)	164165 167167 177179 181221 244245 253254	1

MISSING ITEM NO. NOT APPLICABLE

– ITEM NOT ILLUSTRATED

IDENT	PART NUMBER	1234567 NOMENCLATURE	EFFECT FROM TO	UNITS PER ASSY
DA8-R	MTC100YH1-004	.SHELL-RECEPTACLE (VK1010) (USED WITH INSERT: MTC100YC1-006)	255257 259276	1
DA9-P	MTC100YH1-003	.SHELL-PLUG (VK1010) (USED WITH WAFERS: DUMMY, MTCX1X100-100 TYPE B, MTC100KT1-1102)	164165 167167 177179 181221 244245 253254	1
DA9-P	MTC100YH1-003	.SHELL-PLUG (VK1010) (USED WITH INSERT: MTC100YC1-005)	255257 259276	1
DA9-R	MTC100YH1-004	.SHELL-RECEPTACLE (VK1010) (USED WITH WAFERS: DUMMY, MTCX1X100-100 TYPE B, MTC100KT1-1104)	164165 167167 177179 181221 244245 253254	1
DA9-R	MTC100YH1-004	.SHELL-RECEPTACLE (VK1010) (USED WITH INSERT: MTC100YC1-006)	255257 259276	1
DC-DAB	M400-1265	.RELAY- (VK6265) (USED WITH SOCKET: M12883-40-19 (V81349))		1
DE-DAB	M400-1265	.RELAY- (VK6265) (USED WITH SOCKET: M12883-40-19 (V81349))		1
E	140-4538	.POTENTIOMETER- (VK1021)		1
E-S-DAE	HWBUN1736S10B	.TERMINAL BLOCK- (VK0574)		1
E-T-DAE	HWBUN1736S10B	.TERMINAL BLOCK- (VK0574)		1
E-U-DAE	HWBUN1736S10B	.TERMINAL BLOCK- (VK0574)		1
E-Y-DAE	HWBUN1736S10B	.TERMINAL BLOCK- (VK0574)		1
EC-DAB	M300-1264	.RELAY- (VK6265) (USED WITH SOCKET: M12883-41-16 (V81349))		1
		MISSING ITEM NO. NOT APPLICABLE		

– ITEM NOT ILLUSTRATED

IDENT	PART NUMBER	1234567 NOMENCLATURE	EFFECT FROM TO	UNITS PER ASSY
F1-AA	5920-99-0120076	.FUSE-5AMP (VK0657)		1
F1-AB	5920-99-0120076	.FUSE-5AMP (VK0657)		1
F10-DAC	5920-99-0120076	.FUSE-5AMP (VK0657)		1
F2-AA	5920-99-0120076	.FUSE-5AMP (VK0657)		1
F2-AB	5920-99-0120076	.FUSE-5AMP (VK0657)		1
F3-AA	5920-99-0120076	.FUSE-5AMP (VK0657)		1
F3-AB	5920-99-0120076	.FUSE-5AMP (VK0657)		1
F4-AA	5920-99-0120076	.FUSE-5AMP (VK0657)		1
F4-AB	5920-99-0120076	.FUSE-5AMP (VK0657)		1
F6-AA	5920-99-0120076	.FUSE-5AMP (VK0657)		1
F7-AA	5920-99-0120076	.FUSE-5AMP (VK0657)		1
F9-DAC	5920-99-0120076	.FUSE-5AMP (VK0657)		1
G	140-4538	.POTENTIOMETER- (VK1021)		1
H	140-4538	.POTENTIOMETER- (VK1021)		1
J-WA	72444-030-0AV2	.TERMINAL BLOCK- (VK0574)		1
J-WB	72444-030-0AV2	.TERMINAL BLOCK- (VK0574)		1
K-WA	72444-030-0AV2	.TERMINAL BLOCK- (VK0574)		1
K-WB	72444-030-0AV2	.TERMINAL BLOCK- (VK0574)		1
L-CA	6AT4	.SWITCH- (V91929) (OPT (VK6596))		1
L-WA	72444-030-0AV2	.TERMINAL BLOCK- (VK0574)		1
L-WB	72444-030-0AV2	.TERMINAL BLOCK- (VK0574)		1
M-CA	2D2	.SWITCH MODULE- (V91929) (OPT (VK6596)) (USED WITH SWITCH: 6A43)		1
M-WB	72444-030-0AV2	.TERMINAL BLOCK- (VK0574)		1
		MISSING ITEM NO. NOT APPLICABLE		

– ITEM NOT ILLUSTRATED

IDENT	PART NUMBER	1234567 NOMENCLATURE	EFFECT FROM TO	UNITS PER ASSY
P1-CC	25-8MC599-1A	.ILLUMINATED PANEL- LABEL ASSY,LH (V+1251)		1
P1-CC-R	SCA11108-02	.CONNECTOR-RECEPTACLE (VU2255)		1
P6-CC	25-8MC621-1A	.ILLUMINATED PANEL- LABEL ASSY,RH (V+1251)		1
P6-CC-R	SCA11108-02	.CONNECTOR-RECEPTACLE (VU2255)		1
S-DAE	25-8NF405-503A	.HEAT SINK ASSY- (COMPRISING OF: TRANSISTOR BDX67A (VK3954) TERMINAL BLOCK HWBUN1736S10B (VK0574) POSITION 5A/5B RESISTOR 5905-99-0135626 POSITION 6A/6B RESISTOR 5905-99-0135622 (VK0064))		1
T-CA	HWBUN1736D6B	.TERMINAL BLOCK- (VK0574)		1
T-CD	HWBUN1736D6B	.TERMINAL BLOCK- (VK0574)		1
T-DAE	25-8NF407-503A	.HEAT SINK ASSY- (COMPRISING OF: TRANSISTOR BDX67A (VK3954) TERMINAL BLOCK HWBUN1736S10B (VK0574) POSITION 5A/5B RESISTOR 5905-99-0135626 POSITION 6A/6B RESISTOR 5905-99-0135622 (VK0064))		1
TA-AA	HWBUN1146D5B	.TERMINAL BLOCK- (VK0574)		1
TA-AB	HWBUN1146D5B	.TERMINAL BLOCK- (VK0574)		1
U	140-4538	.POTENTIOMETER- (VK1021)		1
		MISSING ITEM NO. NOT APPLICABLE		

– ITEM NOT ILLUSTRATED

IDENT	PART NUMBER	1234567 NOMENCLATURE	EFFECT FROM TO	UNITS PER ASSY
U-DAE	25-8NF409-503A	.HEAT SINK ASSY- (COMPRISING OF: TRANSISTOR BDX67A (VK3954) TERMINAL BLOCK HWBUN1736S10B (VK0574) POSITION 1A/1B RESISTOR 5905-99-0135622 POSITION 2A/2B RESISTOR 5905 99-0135626 (VK0064))		1
W-CA	702-4584	.POTENTIOMETER-DUAL (VK1021)		1
X-CA	702-4584	.POTENTIOMETER-DUAL (VK1021)		1
Y-CC	HWBUN1736D10B	.TERMINAL BLOCK- (VK0574)		1
Y-DAE	25-8NF397-503A	.HEAT SINK ASSY- (COMPRISING OF: TRANSISTOR BDX66A TRANSISTOR BDX67A (VK3954) TERMINAL BLOCK HWBUN1736S10B (VK0574) POSITION 1A/1B RESISTOR 5905-99-0135638 POSITION 2A/2B RESISTOR 5905-99-0135666 POSITION 3A/3B RESISTOR 5905-99-0135626 POSITION 4A/4B RESISTOR 5905-99-0135626 POSITION 5A/5B RESISTOR 5905-99-0135666 POSITION 6A/6B RESISTOR 5905-99-0135647 (VK0064))		1
Y2-DAB	MRTB20E04-111	.TERMINAL JUNCTION MODULE- (V14283)		1
		MISSING ITEM NO. NOT APPLICABLE		

– ITEM NOT ILLUSTRATED

CABIN STANDBY

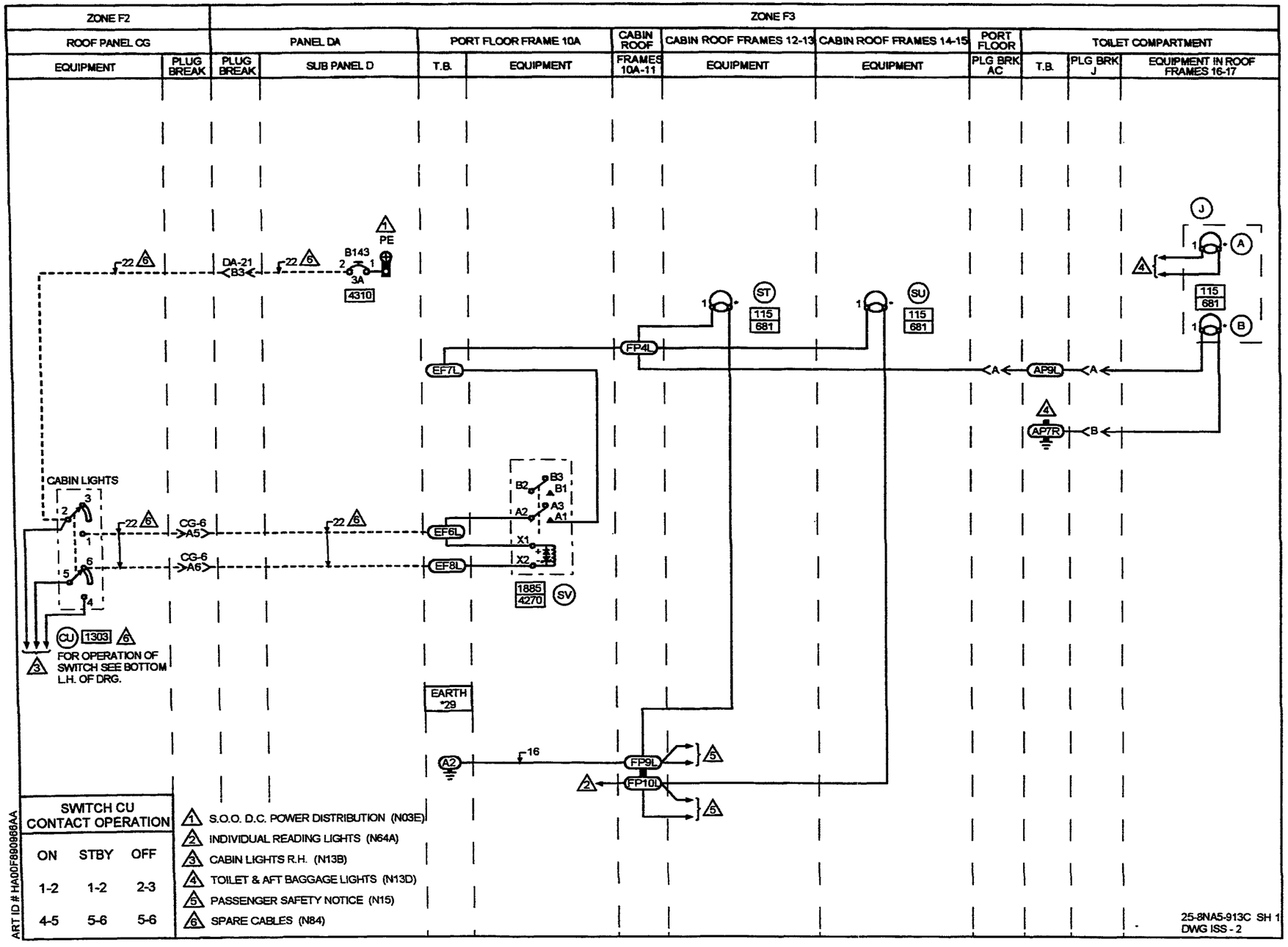
ZONE F2
ZONE F3
ROOF PANEL CG
PANEL DA
PORT FLOOR FRAME 10A
CABIN ROOF FRAMES 10A-11
CABIN ROOF FRAMES 12-13
CABIN ROOF FRAMES 14-15
PORT FLOOR
TOILET COMPARTMENT
EQUIPMENT
PLUG BREAK
PLUG BREAK
SUB PANEL D
T.B.
EQUIPMENT
EQUIPMENT
EQUIPMENT
EQUIPMENT
PLG BRK AC
T.B.
PLG BRK J
EQUIPMENT IN ROOF FRAMES 16-17
PE
B143
3A
4310
DA-21
B3
22
6
ST
SU
115
681
FP4L
EF7L
AP9L
AP7R
A
B
J
CABIN LIGHTS
CG-6
A5
CG-6
A6
EF6L
EF8L
B2
B3
B1
A2
A3
A1
X1
X2
1885
4270
SV
CU
1303
FOR OPERATION OF SWITCH SEE BOTTOM L.H. OF DRG.
EARTH
*29
A2
16
FP9L
FP10L
SWITCH CU CONTACT OPERATION
ON STBY OFF
1-2 1-2 2-3
4-5 5-6 5-6
S.O.O. D.C. POWER DISTRIBUTION (N03E)
INDIVIDUAL READING LIGHTS (N64A)
CABIN LIGHTS R.H. (N13B)
TOILET & AFT BAGGAGE LIGHTS (N13D)
PASSENGER SAFETY NOTICE (N15)
SPARE CABLES (N84)
ART ID # HA00F9809866AA
25-8NA5-913C SH 1
DWG ISS - 2

IDENT	PART NUMBER	1234567 NOMENCLATURE	EFFECT FROM TO	UNITS PER ASSY
		STANDBY LIGHTS	258258	
	25-8NA5-913C	WIRING DIAGRAM- (MOD 25A755C)		RF
A-J	H1800C1	.LAMP HOLDER- (VU1974)		1
AC-P	BAEREF000003187	.CONNECTOR-SOCKET (6027-14-12SNCONDD (VK1793))		1
AC-R	BAEREF000003509	.CONNECTOR-PIN (6026-14-12PNCONDD (VK1793))		1
AP	HWBUN1736D10B	.TERMINAL BLOCK- (VK0574)		1
B-J	H1800C1	.LAMP HOLDER- (VU1974)		1
B143-DAD	483TCG11J25-3A	.CIRCUIT BREAKER-3AMP (VU0091)		1
CG6-P	MTC100YH2-009	.SHELL-PLUG (VK1010) (USED WITH INSERTS: PRIMARY MTC100YC1-001 SECONDARY MTC100YC1-002)		1
CG6-R	MTC100YH2-010	.SHELL-RECEPTACLE (VK1010) (USED WITH INSERTS: PRIMARY MTC100YC1-003 SECONDARY MTC100YC1-004)		1
CU-CG	2TP1-10M	.SWITCH- (VK6596)		1
DA21-P	MTC100YH2-009	.SHELL-PLUG (VK1010) (USED WITH INSERTS: PRIMARY MTC100YC1-001 SECONDARY MTC100YC1-002)		1
DA21-R	MTC100YH2-010	.SHELL-RECEPTACLE (VK1010) (USED WITH INSERTS: PRIMARY MTC100YC1-003 SECONDARY MTC100YC1-004)		1
EF	HWBUN1146D10B	.TERMINAL BLOCK- (VK0574)		1
FP	HWBUN1146D10B	.TERMINAL BLOCK- (VK0574)		1
J-P	BAEREF000003649	.CONNECTOR-PIN (6027-10-6PNCONDC (VK1793))		1
J-R	BAEREF000003533	.CONNECTOR-SOCKET (6026-10-6SNCONDD (VK1793))		1
		MISSING ITEM NO. NOT APPLICABLE		

– ITEM NOT ILLUSTRATED

IDENT	PART NUMBER	1234567 NOMENCLATURE	EFFECT FROM TO	UNITS PER ASSY
ST	H1800C1	.LAMP HOLDER- (VU1974)		1
SU	H1800C1	.LAMP HOLDER- (VU1974)		1
SV	M300-1264	.RELAY- (VK6265) (USED WITH SOCKET: M12883-41-16 (V81349))		1
		MISSING ITEM NO. NOT APPLICABLE		

– ITEM NOT ILLUSTRATED

MISCELLANEOUS

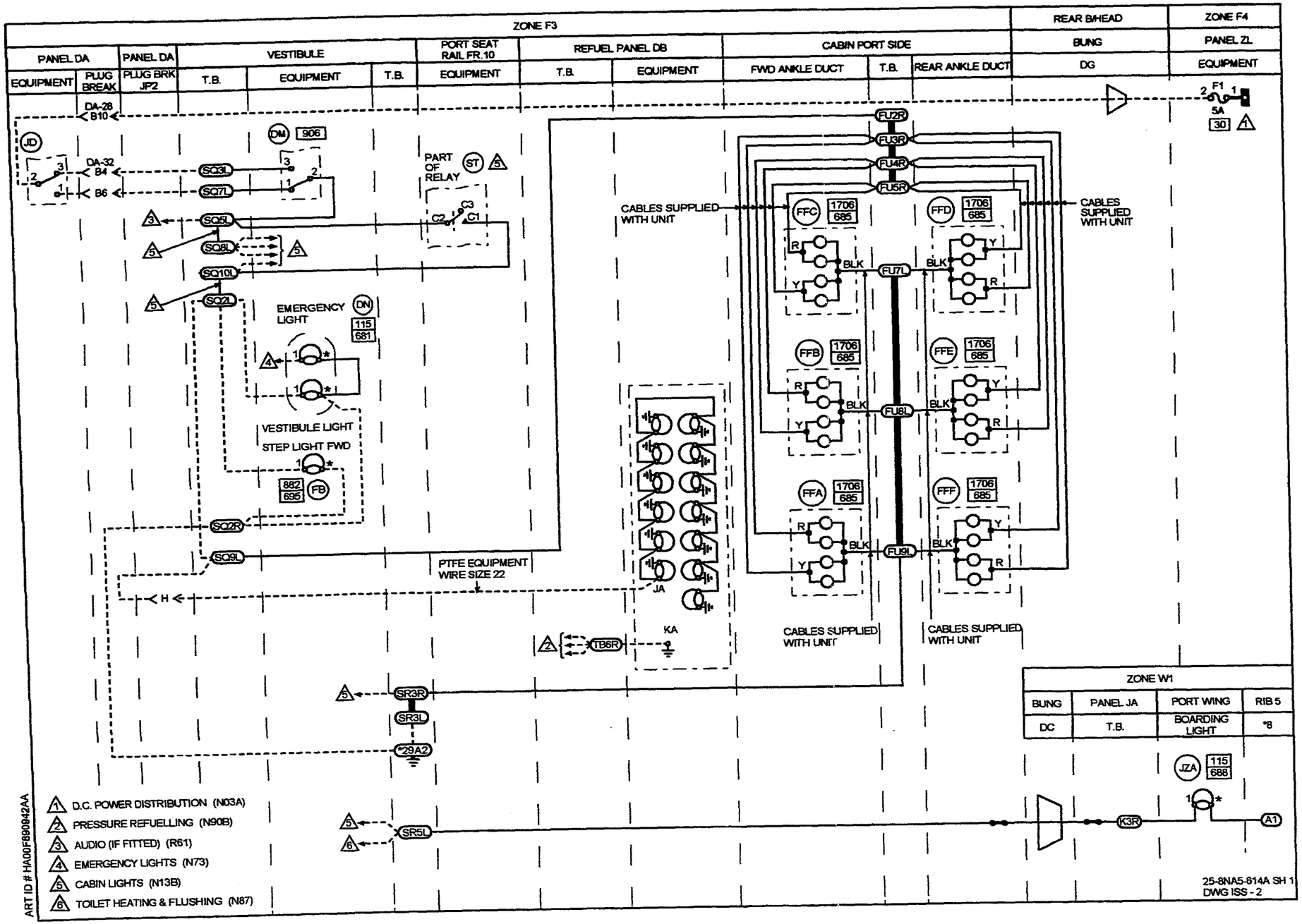
ZONE F3
PANEL DA
EQUIPMENT
PLUG BREAK
PANEL DA
PLUG BRK JP2
VESTIBULE
T.B.
EQUIPMENT
T.B.
PORT SEAT RAIL FR.10
EQUIPMENT
REFUEL PANEL DB
T.B.
EQUIPMENT
CABIN PORT SIDE
FWD ANKLE DUCT
T.B.
REAR ANKLE DUCT
REAR B/HEAD
BUNG
DG
ZONE F4
PANEL ZL
EQUIPMENT
DA-28 B10
JD
DA-32 B4
B6
SQ3L
SQ7L
SQ5L
SQ8L
SQ10L
SQ2L
DM 906
PART OF RELAY
ST
C1
C2
C3
EMERGENCY LIGHT
DN 115 681
VESTIBULE LIGHT
STEP LIGHT FWD
882 695
FB
SQ2R
SQ9L
PTFE EQUIPMENT WIRE SIZE 22
H
JA
KA
TB6R
SR3R
SR3L
*29A2
SR5L
CABLES SUPPLIED WITH UNIT
FU2R
FU3R
FU4R
FU5R
FFC 1706 685
FFD 1706 685
FFB 1706 685
FFE 1706 685
FFA 1706 685
FFF 1706 685
FU7L
FU8L
FU9L
R
Y
BLK
CABLES SUPPLIED WITH UNIT
CABLES SUPPLIED WITH UNIT
CABLES SUPPLIED WITH UNIT
F1
5A
30
ZONE W1
BUNG
PANEL JA
PORT WING
RIB 5
DC
T.B.
BOARDING LIGHT
*8
JZA 115 688
K3R
A1
1 D.C. POWER DISTRIBUTION (N03A)
2 PRESSURE REFUELLING (N90B)
3 AUDIO (IF FITTED) (R61)
4 EMERGENCY LIGHTS (N73)
5 CABIN LIGHTS (N13B)
6 TOILET HEATING & FLUSHING (N87)
ART ID # HA00F890942AA
25-8NA5-614A SH 1
DWG ISS - 2

IDENT	PART NUMBER	1234567 NOMENCLATURE	EFFECT FROM TO	UNITS PER ASSY
		MISCELLANEOUS LIGHTS	091091 097097 133134 143143 149149 177177 182182 192192 194194 197197	
	25-8NA5-614A	WIRING DIAGRAM- (MOD 259429B) (MOD 259434B)		RF
A	HWBUN1146D10B	.TERMINAL BLOCK- (VK0574)		1
DA28-P	MTC100YH1-003	.SHELL-PLUG (VK1010) (USED WITH WAFERS: TYPE A, MTC100KT1-1101 TYPE B, MTC100KT1-1102)		1
DA28-R	MTC100YH1-004	.SHELL-RECEPTACLE (VK1010) (USED WITH WAFERS: TYPE A, MTC100KT1-1103 TYPE B, MTC100KT1-1104)		1
DA32-P	MTC100YH1-003	.SHELL-PLUG (VK1010) (USED WITH WAFERS: TYPE A, MTC100KT1-1101 TYPE B, MTC100KT1-1102)		1
DA32-R	MTC100YH1-004	.SHELL-RECEPTACLE (VK1010) (USED WITH WAFERS: TYPE A, MTC100KT1-1103 TYPE B, MTC100KT1-1104)		1
DC	422254-8	.BUNG- (VK1793)		1
DG	422255-8	.BUNG- (VK1793)		1
DM	1TP4-3	.SWITCH- (VK6596)		1
DN	H1800C1	.LAMP HOLDER- (VU1974)		1
FB	03-0033	.LAMPHOLDER- (VK5688)		1
FFA	02-1117	.FLOODLIGHT- (VK0690)		1
FFB	02-1117	.FLOODLIGHT- (VK0690)		1
		MISSING ITEM NO. NOT APPLICABLE		

– ITEM NOT ILLUSTRATED

IDENT	PART NUMBER	1234567 NOMENCLATURE	EFFECT FROM TO	UNITS PER ASSY
FFC	02-1117	.FLOODLIGHT- (VK0690)		1
FFD	02-1117	.FLOODLIGHT- (VK0690)		1
FFE	02-1117	.FLOODLIGHT- (VK0690)		1
FFF	02-1117	.FLOODLIGHT- (VK0690)		1
FU	HWBUN1736D10B	.TERMINAL BLOCK- (VK0574)		1
F1-ZL	5920-99-0120076	.FUSE-5AMP (VK0657)		1
JA-DB	B375-01-001	.LAMPHOLDER- (VK0673)		13
JD-DA	1TP1-3	.SWITCH- (VK6596)	091091 097097	1
JD-DA	1TP1-3M	.SWITCH- (VK6596)	133134 143143 149149 177177 182182 192192 194194 197197	1
JP2-DA-P	125REF000000061	.CONNECTOR-PIN (6026-22-55PWCONDD (VK1793))		1
JP2-DA-R	BAEREF000004362	.CONNECTOR-SOCKET (6027-22-55SWCONDD (VK1793))		1
JZA	H1800C1	.LAMP HOLDER- (VU1974)		1
K-JA	HWBUN1146D10B	.TERMINAL BLOCK- (VK0574)		1
SQ	HWBUN1146D10B	.TERMINAL BLOCK- (VK0574)		1
SR	HWBUN1146D10B	.TERMINAL BLOCK- (VK0574)		1
ST	M400-1265	.RELAY- (VK6265) (USED WITH SOCKET: M12883-40-19 (V81349))		1
TB-DB	HWBUN1736D10B	.TERMINAL BLOCK- (VK0574)		1
		MISSING ITEM NO. NOT APPLICABLE		

- ITEM NOT ILLUSTRATED

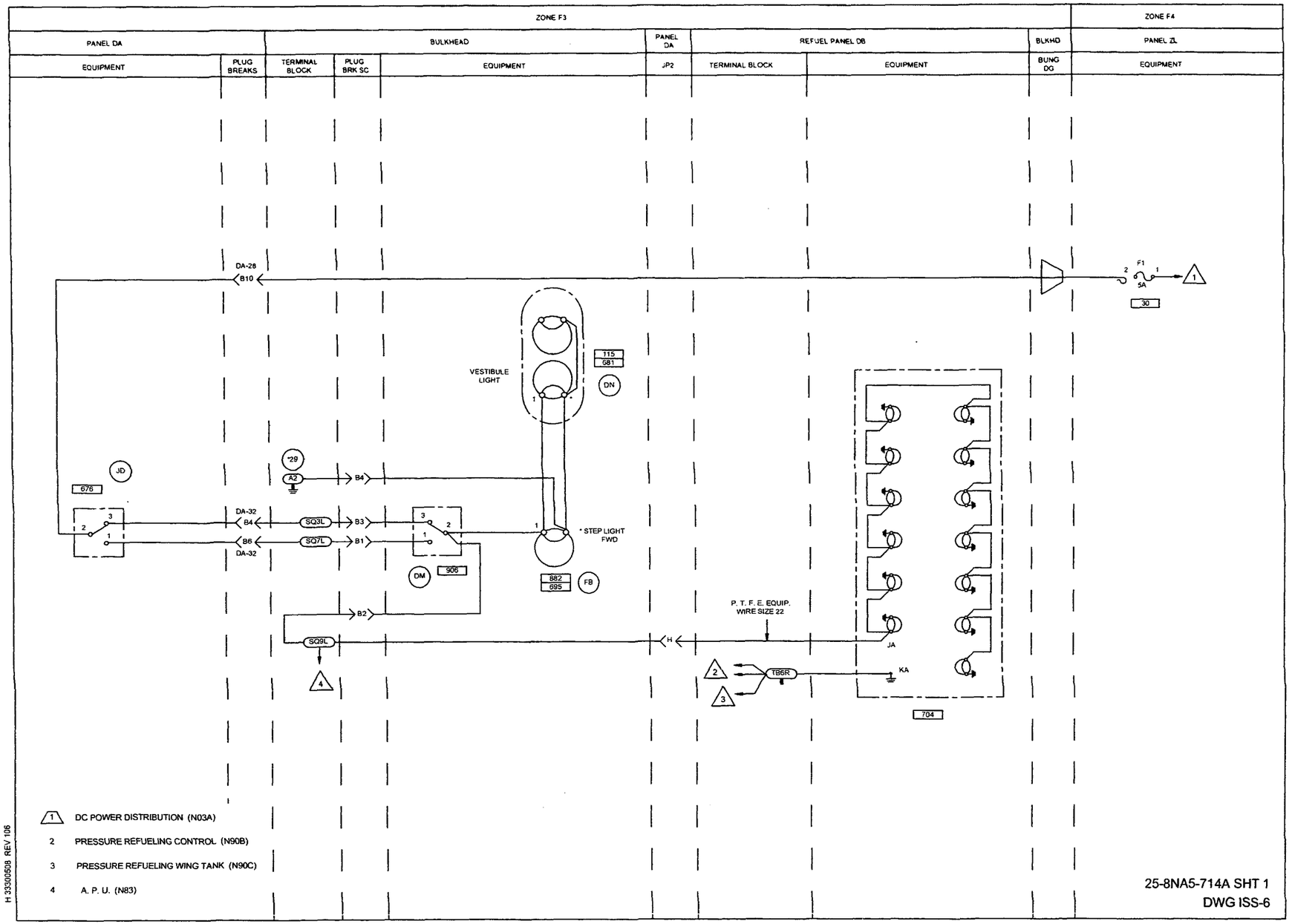
ZONE F3
ZONE F4
PANEL DA
BULKHEAD
PANEL DA
REFUEL PANEL DB
BLKHD
PANEL ZL
EQUIPMENT
PLUG BREAKS
TERMINAL BLOCK
PLUG BRK SC
EQUIPMENT
JP2
TERMINAL BLOCK
EQUIPMENT
BUNG DG
EQUIPMENT
DA-28
B10
F1
5A
30
VESTIBULE LIGHT
115
681
DN
676
JD
*29
A2
B4
DA-32
B4
SQ3L
B3
B6
SQ7L
B1
DA-32
906
DM
882
695
FB
* STEP LIGHT FWD
B2
SQ9L
H
P. T. F. E. EQUIP. WIRE SIZE 22
JA
TB6R
KA
704
1 DC POWER DISTRIBUTION (N03A)
2 PRESSURE REFUELING CONTROL (N90B)
3 PRESSURE REFUELING WING TANK (N90C)
4 A. P. U. (N83)
H 3330508 REV 108
25-8NA5-714A SHT 1
DWG ISS-6

IDENT	PART NUMBER	1234567 NOMENCLATURE	EFFECT FROM TO	UNITS PER ASSY
		MISCELLANEOUS LIGHTS	092093	
			095096	
			098105	
			107108	
			111111	
			113114	
			117117	
			119119	
			121129	
			132132	
			135142	
			144145	
			147147	
			150163	
			166166	
			168176	
			178179	
			181181	
			183183	
			185185	
			187189	
			191191	
			193193	
			195196	
			199207	
			209209	
			212218	
			220221	
			223223	
			225225	
			229232	
			234234	
			236236	
			238257	
			259276	
	25-8NA5-714A	WIRING DIAGRAM-		RF
		(MOD 253149C)		
		(MOD 25F505A)		
		MISSING ITEM NO. NOT APPLICABLE		

– ITEM NOT ILLUSTRATED

IDENT	PART NUMBER	1 2 3 4 5 6 7 NOMENCLATURE	EFFECT FROM TO	UNITS PER ASSY
DA28-P	MTC100YH1-003	.SHELL-PLUG (VK1010) (USED WITH WAFERS: TYPE A, MTC100KT1-1101 TYPE B, MTC100KT1-1102)	092093 095096 098105 107108 111111 113114 117117 119119 121129 132132 135142 144145 147147 150163 166166 168176 178179 181181 183183 185185 187189 191191 193193 195196 199207 209209 212218 220221 223223 225225 229232 234234 236236 238254	1
DA28-P	MTC100YH1-003	.SHELL-PLUG (VK1010) (USED WITH INSERT: MTC100YC1-005)	255257 259276	1
		MISSING ITEM NO. NOT APPLICABLE		

– ITEM NOT ILLUSTRATED

IDENT	PART NUMBER	1234567 NOMENCLATURE	EFFECT FROM TO	UNITS PER ASSY
DA28-R	MTC100YH1-004	.SHELL-RECEPTACLE (VK1010) (USED WITH WAFERS: TYPE A, MTC100KT1-1103 TYPE B, MTC100KT1-1104)	092093 095096 098105 107108 111111 113114 117117 119119 121129 132132 135142 144145 147147 150163 166166 168176 178179 181181 183183 185185 187189 191191 193193 195196 199207 209209 212218 220221 223223 225225 229232 234234 236236 238254	1
DA28-R	MTC100YH1-004	.SHELL-RECEPTACLE (VK1010) (USED WITH INSERT: MTC100YC1-006)	255257 259276	1
		MISSING ITEM NO. NOT APPLICABLE		

– ITEM NOT ILLUSTRATED

IDENT	PART NUMBER	1234567 NOMENCLATURE	EFFECT FROM TO	UNITS PER ASSY
DA32-P	MTC100YH1-003	.SHELL-PLUG (VK1010) (USED WITH WAFERS: TYPE A, MTC100KT1-1101 TYPE B, MTC100KT1-1102)	092093 095096 098105 107108 111111 113114 117117 119119 121129 132132 135142 144145 147147 150163 166166 168176 178179 181181 183183 185185 187189 191191 193193 195196 199207 209209 212218 220221 223223 225225 229232 234234 236236 238254	1
DA32-P	MTC100YH1-003	.SHELL-PLUG (VK1010) (USED WITH INSERT: MTC100YC1-005)	255257 259276	1
		MISSING ITEM NO. NOT APPLICABLE		

– ITEM NOT ILLUSTRATED

IDENT	PART NUMBER	1234567 NOMENCLATURE	EFFECT FROM TO	UNITS PER ASSY
DA32-R	MTC100YH1-004	.SHELL-RECEPTACLE (VK1010) (USED WITH WAFERS: TYPE A, MTC100KT1-1103 TYPE B, MTC100KT1-1104)	092093 095096 098105 107108 111111 113114 117117 119119 121129 132132 135142 144145 147147 150163 166166 168176 178179 181181 183183 185185 187189 191191 193193 195196 199207 209209 212218 220221 223223 225225 229232 234234 236236 238254	1
DA32-R	MTC100YH1-004	.SHELL-RECEPTACLE (VK1010) (USED WITH INSERT: MTC100YC1-006)	255257 259276	1
DG	422255-8	.BUNG- (VK1793)		1
DM	1TP4-3	.SWITCH- (VK6596)		1
DN	H1800C1	.LAMPHOLDER- (VU1974)		1
FB	03-0033	.LAMPHOLDER- (VK5688)		1
F1-ZL	5920-99-0120076	.FUSE-5AMP (VK0657)		1
JA-DB	B375-01-001	.LAMPHOLDER- (VK0673)		13
		MISSING ITEM NO. NOT APPLICABLE		

– ITEM NOT ILLUSTRATED

IDENT	PART NUMBER	1234567 NOMENCLATURE	EFFECT FROM TO	UNITS PER ASSY
JD-DA	1TP1-3	.SWITCH- (VK6596)	092093 095096 098105 107108 111111 113114	1
JD-DA	1TP1-3M	.SWITCH- (VK6596)	117117 119119 121129 132132 135142 144145 147147 150163 166166 168176 178179 181181 183183 185185 187189 191191 193193 195196 199207 209209 212218 220221 223223 225225 229232 234234 236236 238257 259276	1
JP2-DA-P	125REF000000061	.CONNECTOR-PIN (6026-22-55PWCONDD (VK1793))		1
JP2-DA-R	BAEREF000004362	.CONNECTOR-SOCKET (6027-22-55SWCONDD (VK1793))		1

MISSING ITEM NO. NOT APPLICABLE

– ITEM NOT ILLUSTRATED

IDENT	PART NUMBER	1 2 3 4 5 6 7 NOMENCLATURE	EFFECT FROM TO	UNITS PER ASSY
SC-P	MTC100YH2-009	.SHELL-PLUG (VK1010) (USED WITH WAFERS: TYPE A, MTC100KT2-1103 DUMMY B, MTCX2X200-200)	092093 095096 098105 107108 111111 113114 117117 119119 121129 132132 135142 144145 147147 150163 166166 168176 178179 181181 183183 185185 187189 191191 193193 195196 199207 209209 212218 220221 223223 225225 229232 234234 236236 238254	1
SC-P	MTC100YH2-009	.SHELL-PLUG (VK1010) (USED WITH INSERTS: PRIMARY MTC100YC1-003 SECONDARY MTC100YC1-004)	255257 259276	1
		MISSING ITEM NO. NOT APPLICABLE		

– ITEM NOT ILLUSTRATED

IDENT	PART NUMBER	1234567 NOMENCLATURE	EFFECT FROM TO	UNITS PER ASSY
SC-R	MTC100YH2-010	.SHELL-RECEPTACLE (VK1010) (USED WITH WAFERS: TYPE A, MTC100KT2-1101 DUMMY B, MTCX2X200-200)	092093 095096 098105 107108 111111 113114 117117 119119 121129 132132 135142 144145 147147 150163 166166 168176 178179 181181 183183 185185 187189 191191 193193 195196 199207 209209 212218 220221 223223 225225 229232 234234 236236 238254	1
SC-R	MTC100YH2-010	.SHELL-RECEPTACLE (VK1010) (USED WITH INSERTS: PRIMARY MTC100YC1-001 SECONDARY MTC100YC1-002)	255257 259276	1
SQ	HWBUN1146D10B	.TERMINAL BLOCK- (VK0574)		1
TB-DB	HWBUN1736D10B	.TERMINAL BLOCK- (VK0574)		1
		MISSING ITEM NO. NOT APPLICABLE		

– ITEM NOT ILLUSTRATED

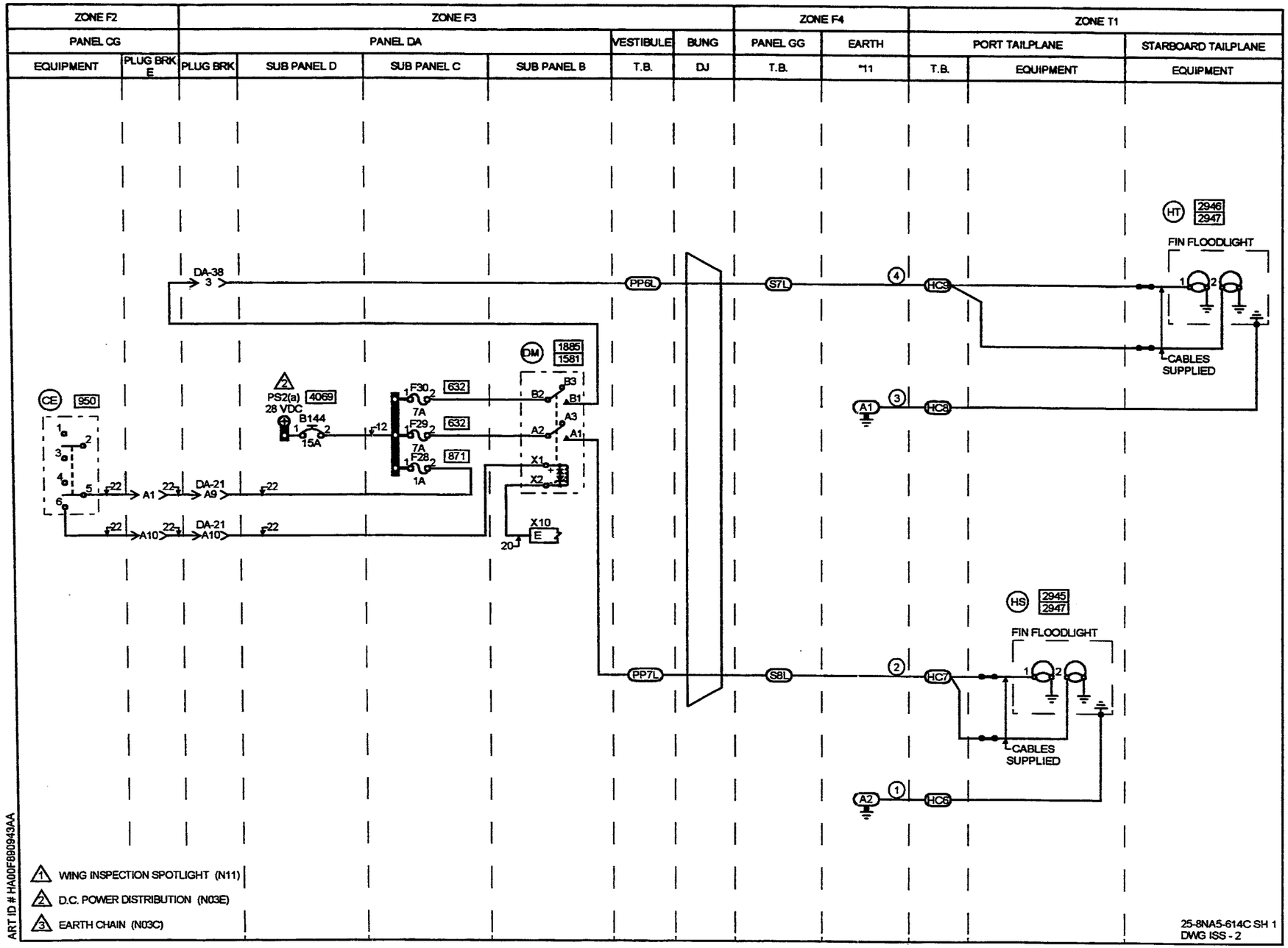
ZONE F2
ZONE F3
ZONE F4
ZONE T1
PANEL CG
PANEL DA
VESTIBULE
BUNG
PANEL GG
EARTH
PORT TAILPLANE
STARBOARD TAILPLANE
EQUIPMENT
PLUG BRK E
PLUG BRK
SUB PANEL D
SUB PANEL C
SUB PANEL B
T.B.
DJ
T.B.
*11
T.B.
EQUIPMENT
EQUIPMENT
HT
2946
2947
FIN FLOODLIGHT
DA-38
3
PP6L
S7L
4
HC9
CABLES SUPPLIED
DM
1885
1581
CE
950
PS2(a)
4069
28 VDC
B144
15A
F30
632
7A
F29
632
7A
F28
871
1A
A1
3
HC8
DA-21
A9
DA-21
A10
X1
X2
X10
E
HS
2945
2947
FIN FLOODLIGHT
PP7L
S8L
2
HC7
CABLES SUPPLIED
A2
1
HC6
ART ID # HA00F890943AA
WING INSPECTION SPOTLIGHT (N11)
D.C. POWER DISTRIBUTION (N03E)
EARTH CHAIN (N03C)
25-8NA5-614C SH 1
DWG ISS - 2

IDENT	PART NUMBER	1234567 NOMENCLATURE	EFFECT FROM TO	UNITS PER ASSY
		MISCELLANEOUS LIGHTS-TAIL	094094 149149 180180 211212 240240 243243	
	25-8NA5-614C	WIRING DIAGRAM- (MOD 258921E)		RF
B144-DAD	25-8NF2217-15	.CIRCUIT BREAKER-15A (ALTERED FROM 482-96TCK14-15A (VU0091))		1
CE-CG	2TP8-1	.SWITCH- (V58960) (OPT (VK6596))		1
CGE-P	MTC100YH1-003	.SHELL-PLUG (VK1010) (USED WITH WAFERS: TYPE A, MTC100KT1-1103 TYPE B, MTC100KT1-1104)		1
CGE-R	MTC100YH1-004	.SHELL-RECEPTACLE (VK1010) (USED WITH WAFERS: TYPE A, MTC100KT1-1101 TYPE B, MTC100KT1-1102)		1
DA21-P	MTC100YH2-009	.SHELL-PLUG (VK1010) (USED WITH WAFERS: TYPE A, MTC100KT2-1101 TYPE B, MTC100KT2-1102)		1
DA21-R	MTC100YH2-010	.SHELL-RECEPTACLE (VK1010) (USED WITH WAFERS: TYPE A, MTC100KT2-1103 TYPE B, MTC100KT2-1104)		1
DA38-P	MTC16104P	.CONNECTOR-PIN (VK1010)		1
DA38-R	MTC10104S	.CONNECTOR-SOCKET (VK1010)		1
DJ	422255-7	.BUNG- (VK1793)		1
DM-DAB	M300-126A	.RELAY- (VK6265) (USED WITH BASE: S300A1A2)		1
F28-DAC	5920-99-0120073	.FUSE-1A (VK0657)		1
F29-DAC	5920-99-0120077	.FUSE-7A (VK0657)		1
		MISSING ITEM NO. NOT APPLICABLE		

– ITEM NOT ILLUSTRATED

IDENT	PART NUMBER	1234567 NOMENCLATURE	EFFECT FROM TO	UNITS PER ASSY
F30-DAC	5920-99-0120077	.FUSE-7A (VK0657)		1
HC	HWBUN1736D10B	.TERMINAL BLOCK- (VK0574)		1
HS	25-7TP25-1	.FLOODLIGHT		1
HT	25-7TP25-2	.FLOODLIGHT		1
PP	HWBUN1736D5B	.TERMINAL BLOCK- (VK0574)		1
S-GG	HWBUN1146D10B	.TERMINAL BLOCK- (VK0574)		1
X10-DAB	MRRB20E04-111	.TERMINAL JUNCTION MODULE- (V14283)		1
		MISSING ITEM NO. NOT APPLICABLE		

- ITEM NOT ILLUSTRATED

REAR EQUIPMENT BAY

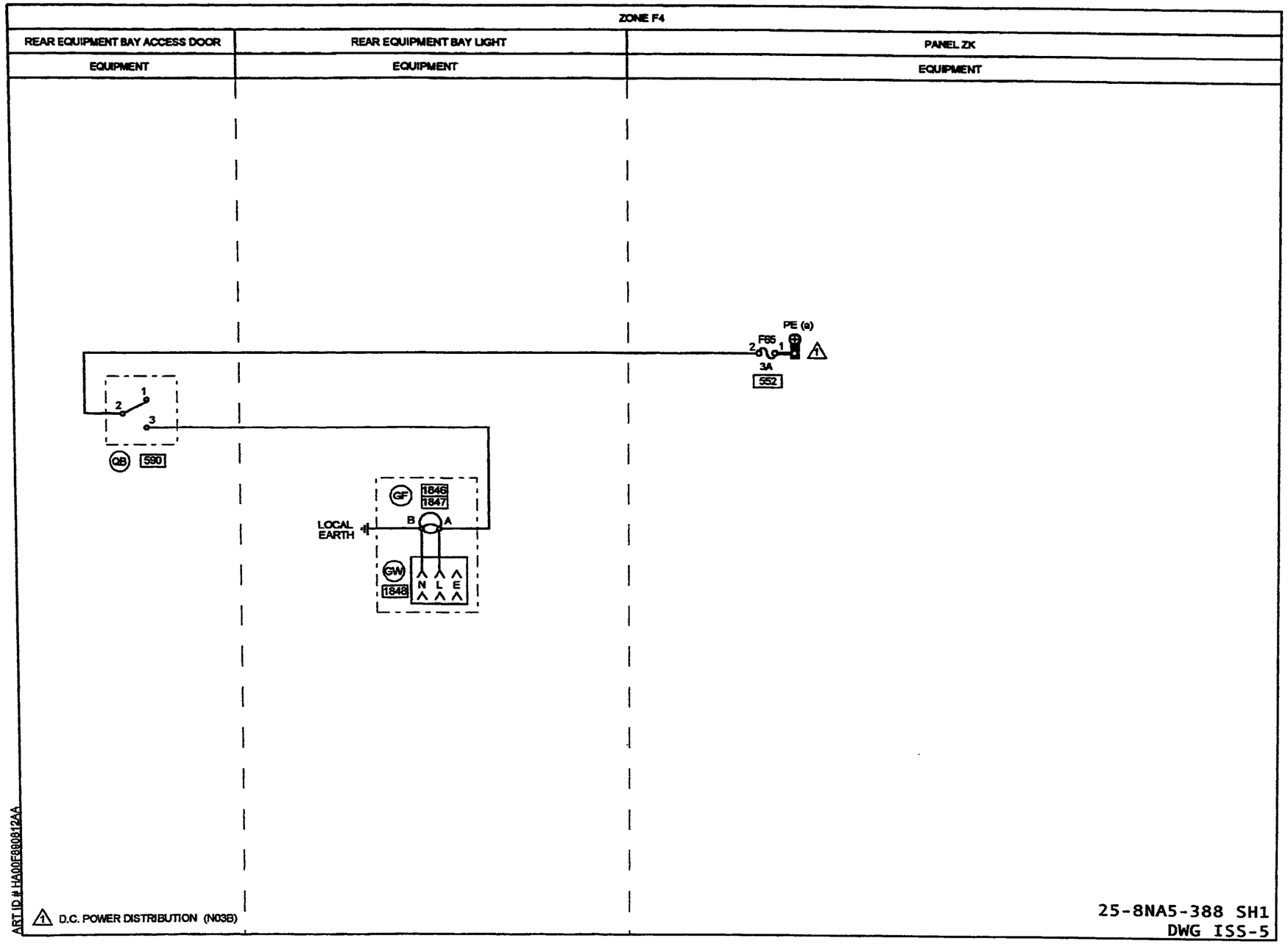
ZONE F4
REAR EQUIPMENT BAY ACCESS DOOR
EQUIPMENT
REAR EQUIPMENT BAY LIGHT
EQUIPMENT
PANEL ZK
EQUIPMENT
PE (a)
F65
2
1
3A
552
1
2
3
QB
590
GF
1846
1847
LOCAL EARTH
B
A
GW
1848
N
L
E
ART ID # HA00F8808124A
D.C. POWER DISTRIBUTION (N03B)
25-8NA5-388 SH1
DWG ISS-5

IDENT	PART NUMBER	1234567 NOMENCLATURE	EFFECT FROM TO	UNITS PER ASSY
		REAR EQUIPMENT BAY LIGHTING	091276	
	25-8NA5-388	WIRING DIAGRAM-		RF
		(MOD 253149C)		
		(MOD 25F505A)		
F65-ZK	5920-99-0120075	.FUSE-3AMP		1
		(VK0657)		
GF	30180B25	.DOMELIGHT-		1
		(VOBYW8)		
GW	P650	.SOCKET-		1
		(VU0928)		
QB	LHA1BG105-2	.SWITCH-		1
		(VK4358)		
		(PRE MOD 253547A)		
QB	MS24523-22	.SWITCH-		1
		(V27191)		
		(MOD 253547A)		
		MISSING ITEM NO. NOT APPLICABLE		

– ITEM NOT ILLUSTRATED

EXTERIOR

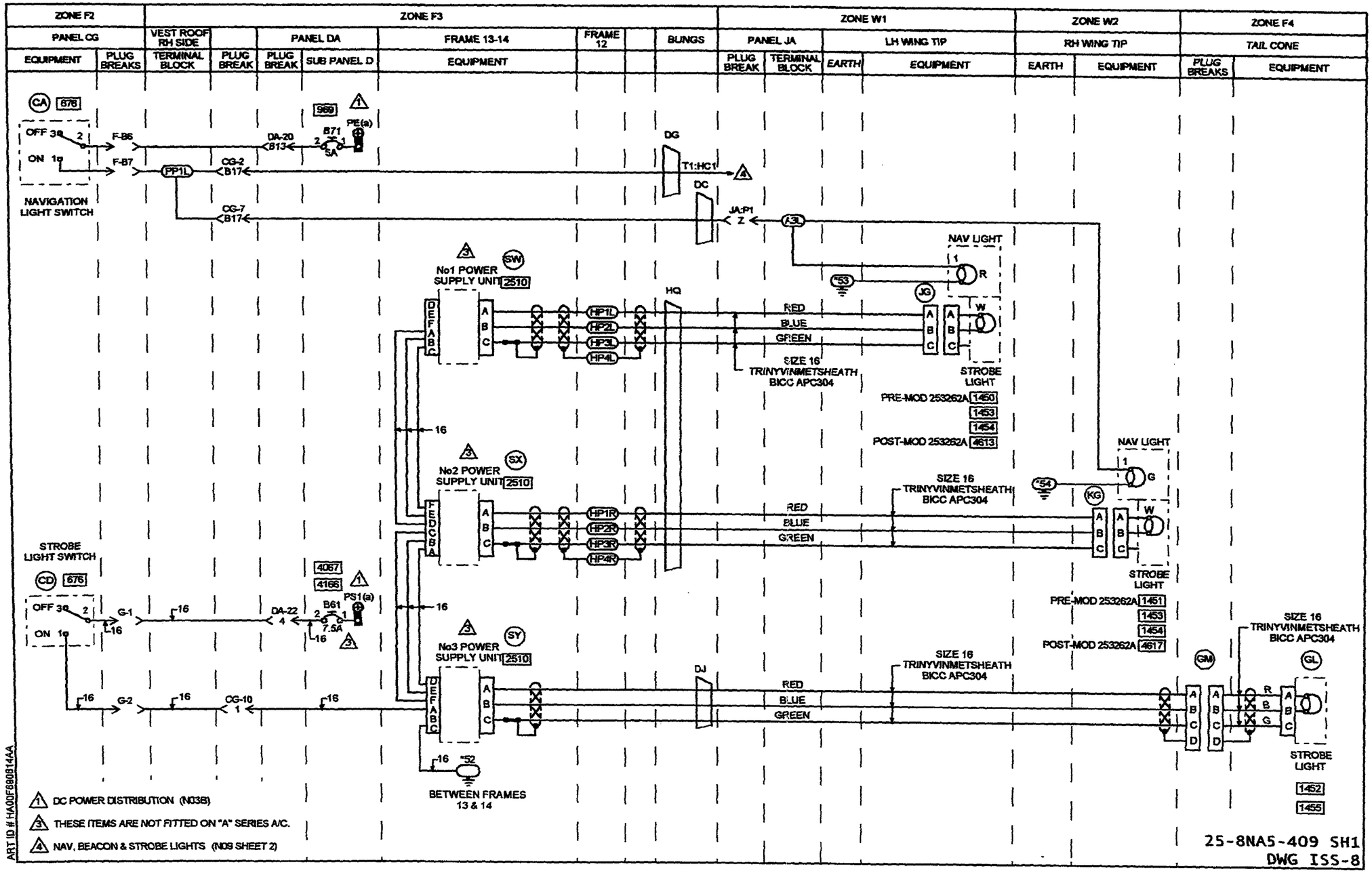
ZONE F2
ZONE F3
ZONE W1
ZONE W2
ZONE F4
PANEL CG
VEST ROOF RH SIDE
PANEL DA
FRAME 13-14
FRAME 12
BUNGS
PANEL JA
LH WING TIP
RH WING TIP
TAIL CONE
EQUIPMENT
PLUG BREAKS
TERMINAL BLOCK
PLUG BREAK
SUB PANEL D
EARTH
NAVIGATION LIGHT SWITCH
OFF
ON
F-B6
F-B7
PP1L
CG-2
CG-7
DA-20
B71
PE(a)
DG
DC
T1:HC1
JA:P1
A3L
NAV LIGHT
No1 POWER SUPPLY UNIT
No2 POWER SUPPLY UNIT
No3 POWER SUPPLY UNIT
HP1L
HP2L
HP3L
HP4L
HP1R
HP2R
HP3R
HP4R
HQ
RED
BLUE
GREEN
SIZE 16 TRINYVINMETSHEATH BICC APC304
STROBE LIGHT
PRE-MOD 253262A
POST-MOD 253262A
STROBE LIGHT SWITCH
G-1
G-2
DA-Z2
B61
PS1(a)
CG-10
DJ
BETWEEN FRAMES 13 & 14
DC POWER DISTRIBUTION (N038)
THESE ITEMS ARE NOT FITTED ON "A" SERIES A/C.
NAV, BEACON & STROBE LIGHTS (N09 SHEET 2)
ART ID # HA00F8808144A
25-8NA5-409 SH1
DWG ISS-8

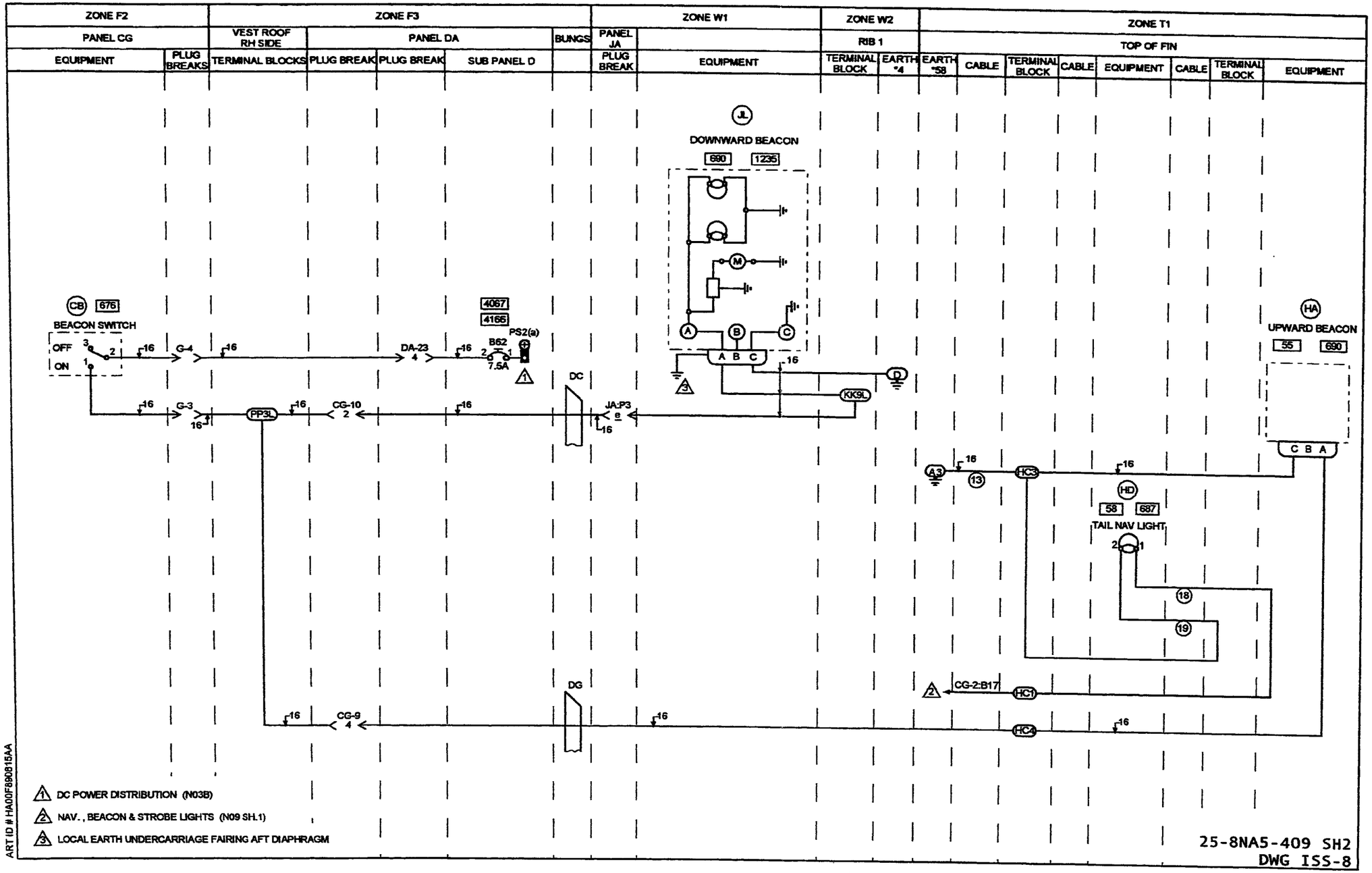
ZONE F2
PANEL CG
EQUIPMENT
PLUG BREAKS
ZONE F3
VEST ROOF RH SIDE
TERMINAL BLOCKS
PANEL DA
PLUG BREAK
PLUG BREAK
SUB PANEL D
BUNGS
ZONE W1
PANEL JA
PLUG BREAK
EQUIPMENT
ZONE W2
RIB 1
TERMINAL BLOCK
EARTH #4
ZONE T1
TOP OF FIN
EARTH #58
CABLE
TERMINAL BLOCK
CABLE
EQUIPMENT
CABLE
TERMINAL BLOCK
EQUIPMENT
JL
DOWNWARD BEACON
690
1235
CB
676
BEACON SWITCH
OFF
ON
G-4
DA-23
4
4067
4165
B62
7.5A
PS2(a)
DC
JA:P3
KK9L
G-3
PP3L
CG-10
2
HA
UPWARD BEACON
55
690
C B A
A3
13
HC3
HD
58
687
TAIL NAV LIGHT
18
19
DG
CG-2:B17
HC1
CG-9
4
HC4
DC POWER DISTRIBUTION (N03B)
NAV., BEACON & STROBE LIGHTS (N09 SH.1)
LOCAL EARTH UNDERCARRIAGE FAIRING AFT DIAPHRAGM
ART ID # HA00F8908815AA
25-8NA5-409 SH2
DWG ISS-8

IDENT	PART NUMBER	1234567 NOMENCLATURE	EFFECT FROM TO	UNITS PER ASSY
		NAVIGATION,BEACON AND STROBE LIGHTS	091276	
	25-8NA5-409	WIRING DIAGRAM- (MOD 253149C) (MOD 25F505A)		RF
A-JA	HWBUN1146D10B	.TERMINAL BLOCK- (VK0574)		1
B61-DAD	25-8NF2217-7	.CIRCUIT BREAKER-7.5AMP (ALTERED FROM 483-96TCK14-7-5A (VU0091))		1
B62-DAD	25-8NF823-7	.CIRCUIT BREAKER-7.5AMP (ALTERED FROM D33107 (VK4358))		1
B71-DAD	463TCG11J25-5A	.CIRCUIT BREAKER-5AMP (VU0091)		1
CA-CG	1TP1-3	.SWITCH- (V91929) (OPT (VK6596))	091116	1
CA-CG	1TP1-3M	.SWITCH- (V91929) (OPT (VK6596))	117276	1
CB-CG	1TP1-3	.SWITCH- (V91929) (OPT (VK6596))	091116	1
CB-CG	1TP1-3M	.SWITCH- (V91929) (OPT (VK6596))	117276	1
CD-CG	1TP1-3	.SWITCH- (V91929) (OPT (VK6596))	091116	1
CD-CG	1TP1-3M	.SWITCH- (V91929) (OPT (VK6596))	117276	1
CGF-P	MTC100YH1-003	.SHELL-PLUG (VK1010) (USED WITH WAFERS: TYPE A, MTC100KT1-1103 TYPE B, MTC100KT1-1104)	091254	1
CGF-P	MTC100YH1-003	.SHELL-PLUG (VK1010) (USED WITH INSERT: MTC100YC1-006)	255276	1
CGF-R	MTC100YH1-004	.SHELL-RECEPTACLE (VK1010) (USED WITH WAFERS: TYPE A, MTC100KT1-1101 TYPE B, MTC100KT1-1102)	091254	1
		MISSING ITEM NO. NOT APPLICABLE		

– ITEM NOT ILLUSTRATED

IDENT	PART NUMBER	1234567 NOMENCLATURE	EFFECT FROM TO	UNITS PER ASSY
CGF-R	MTC100YH1-004	.SHELL-RECEPTACLE (VK1010) (USED WITH INSERT: MTC100YC1-005)	255276	1
CGG-P	MTCR101-04P	.CONNECTOR-PIN (VK1010)		1
CGG-R	MTCR161-04S	.CONNECTOR-SOCKET (VK1010)		1
CG10-P	MTCR161-04P	.CONNECTOR-PIN (VK1010)		1
CG10-R	MTCR101-04S	.CONNECTOR-SOCKET (VK1010)		1
CG2-P	MTC100YH2-009	.SHELL-PLUG (VK1010) (USED WITH WAFERS: TYPE A, MTC100KT2-1101 TYPE B, MTC100KT2-1102)	091254	1
CG2-P	MTC100YH2-009	.SHELL-PLUG (VK1010) (USED WITH INSERTS: PRIMARY MTC100YC1-001 SECONDARY MTC100YC1-002)	255276	1
CG2-R	MTC100YH2-010	.SHELL-RECEPTACLE (VK1010) (USED WITH WAFERS: TYPE A, MTC100KT2-1103 TYPE B, MTC100KT2-1104)	091254	1
CG2-R	MTC100YH2-010	.SHELL-RECEPTACLE (VK1010) (USED WITH INSERTS: PRIMARY MTC100YC1-003 SECONDARY MTC100YC1-004)	255276	1
CG7-P	MTC100YH2-009	.SHELL-PLUG (VK1010) (USED WITH WAFERS: TYPE A, MTC100KT2-1101 TYPE B, MTC100KT2-1102)	091254	1
CG7-P	MTC100YH2-009	.SHELL-PLUG (VK1010) (USED WITH INSERTS: PRIMARY MTC100YC1-001 SECONDARY MTC100YC1-002)	255276	1
CG7-R	MTC100YH2-010	.SHELL-RECEPTACLE (VK1010) (USED WITH WAFERS: TYPE A, MTC100KT2-1103 TYPE B, MTC100KT2-1104)	091254	1

MISSING ITEM NO. NOT APPLICABLE

– ITEM NOT ILLUSTRATED

IDENT	PART NUMBER	1234567 NOMENCLATURE	EFFECT FROM TO	UNITS PER ASSY
CG7-R	MTC100YH2-010	.SHELL-RECEPTACLE (VK1010) (USED WITH INSERTS: PRIMARY MTC100YC1-003 SECONDARY MTC100YC1-004)	255276	1
CG9-P	MTCR161-04P	.CONNECTOR-PIN (VK1010)		1
CG9-R	MTCR101-04S	.CONNECTOR-SOCKET (VK1010)		1
DA20-P	MTC100YH2-009	.SHELL-PLUG (VK1010) (USED WITH WAFERS: TYPE A, MTC100KT2-1101 TYPE B, MTC100KT2-1102)	091254	1
DA20-P	MTC100YH2-009	.SHELL-PLUG (VK1010) (USED WITH INSERTS: PRIMARY MTC100YC1-001 SECONDARY MTC100YC1-002)	255276	1
DA20-R	MTC100YH2-010	.SHELL-RECEPTACLE (VK1010) (USED WITH WAFERS: TYPE A, MTC100KT2-1103 TYPE B, MTC100KT2-1104)	091254	1
DA20-R	MTC100YH2-010	.SHELL-RECEPTACLE (VK1010) (USED WITH INSERTS: PRIMARY MTC100YC1-003 SECONDARY MTC100YC1-004)	255276	1
DA22-P	MTCR161-04P	.CONNECTOR-PIN (VK1010)		1
DA22-R	MTCR101-04S	.CONNECTOR-SOCKET (VK1010)		1
DA23-P	MTCR161-04P	.CONNECTOR-PIN (VK1010)		1
DA23-R	MTCR101-04S	.CONNECTOR-SOCKET (VK1010)		1
DC	422254-8	.BUNG- (VK1793)		1
DG	422255-8	.BUNG- (VK1793)		1
DJ	422255-7	.BUNG- (VK1793)		1
GL	30-0531-1	.LIGHT-STROBE (V0BYW8) (USED WITH: CONNECTOR MS3102R10SL3P CONNECTOR MS3102R10SL3S (VK0316) (OPT (V71468)))		1
		MISSING ITEM NO. NOT APPLICABLE		

– ITEM NOT ILLUSTRATED

IDENT	PART NUMBER	1234567 NOMENCLATURE	EFFECT FROM TO	UNITS PER ASSY
GM-P	MS3456L10SL3SN	.CONNECTOR-SOCKET (VK1793)		1
GM-R	6026-14-5PCONDB	.CONNECTOR-PIN (VK1793)		1
HA	G9950-1	.BEACON- (VOBYW8)		1
HA-R	AN3108E10SL3S	.SOCKET-RIGHT ANGLE (V71468) (OPT (VK0316))		1
HC	HWBUN1736S10B	.TERMINAL BLOCK- (VK0574)		1
HD	80-10-0200	.LIGHT-NAVIGATION (VK0690)		1
HE	HWBUN1146S5B	.TERMINAL BLOCK- (VK0574)		1
HP	HWBUN1736D5B	.TERMINAL BLOCK- (VK0574)		1
HQ	422250-16	.BUNG- (VK1793)		1
JG	30-0538-7	.LIGHT-NAVIGATION/STROBE (VOBYW8) (USED WITH: CONNECTOR MS3106R10SL3P CONNECTOR MS3106R10SL3S (VK0316) (OPT (V71468)))		1
JL	G9950-21	.BEACON- (VOBYW8)		1
JL-P	AN3106E10SL3S	.SHELL-PLUG (V71468) (OPT (VK0316))		1
KG	30-0538-8	.LIGHT-NAVIGATION/STROBE (VOBYW8) (USED WITH: CONNECTOR MS3106R10SL3P CONNECTOR MS3106R10SL3S (VK0316) (OPT (V71468)))		1
KK	72544-030-0AV2	.TERMINAL BLOCK- (VK0574)		1
PP	HWBUN1146D10B	.TERMINAL BLOCK- (VK0574)		1
P1-JA-P	BAEREF000004313	.CONNECTOR-SOCKET (6027-24-61SWCONDD (VK1793))		1
P1-JA-R	BAEREF000003898	.CONNECTOR-PIN (6026-24-61PWCONDD (VK1793))		1
		MISSING ITEM NO. NOT APPLICABLE		

– ITEM NOT ILLUSTRATED

IDENT	PART NUMBER	1234567 NOMENCLATURE	EFFECT FROM TO	UNITS PER ASSY
P3-JA-P	BAEREF000004157	.CONNECTOR-SOCKET (6027-22-41SWCONDD (VK1793))		1
P3-JA-R	BAEREF000004075	.CONNECTOR-PIN (6026-22-41PWCONDD (VK1793))		1
SW	60-1755-1	.POWER SUPPLY UNIT- (UNIT EXCHANGE ITEM) (VOBYW8)		1
SW-P	MS3106R14S6SC	.CONNECTOR-SOCKET (V71468) (OPT (VK0316))		1
SX	60-1755-1	.POWER SUPPLY UNIT- (UNIT EXCHANGE ITEM) (VOBYW8)		1
SX-P	MS3106R14S6SC	.CONNECTOR-SOCKET (V71468) (OPT (VK0316))		1
SY	60-1755-1	.POWER SUPPLY UNIT- (UNIT EXCHANGE ITEM) (VOBYW8)		1
SY-P	MS3106R14S6SC	.CONNECTOR-SOCKET (V71468) (OPT (VK0316))		1
		MISSING ITEM NO. NOT APPLICABLE		

– ITEM NOT ILLUSTRATED

REV								
SHEET								
REV								
SHEET								
REV								
SHEET								
REV								
SHEET								
REVISION STATUS OF SHEETS	G	D	D	E	G			
	1	2	3	4	5			

NOTES:

1. FOR GENERAL NOTES, REFER TO DRAWING A8-02-100.

2. REMAINDER AND PART NUMBER OF [PR4] IS SHOWN ON DRAWING A8-OW-100 OR A8-OW-101.

3. EXISTING TAIL NAV LIGHT AND STROBE ARE REMOVED AND REPLACED WITH GRIMES PART NUMBER 30-0516-1 UNIT.

4. WIRE IS PULLED BACK FROM INDICATED TERMINALS AND STOWED IN LOWER TAIL. WIRES ON HC2 & HC5 ARE LEFT AS INSTALLED FROM FACTORY (REF 25-8NA5-X93). ALL OTHER EXISTING WIRE AT HC & HE TERMINAL STRIPS NOT SHOWN IS TO BE REMOVED.

5. WIRE IS PULLED BACK FROM INDICATED TERMINALS AND STOWED IN LOWER TAIL. WIRES ON HC2 & HC5 ARE LEFT AS INSTALLED FROM FACTORY (REF 25-8NA5-X93). ALL OTHER EXISTING WIRE AT HC TERMINAL STRIP SHALL BE REMOVED AND REPLACED WITH 16GA WIRE AS SHOWN.

H 33401008 SHT 1 REV 097

A8-7M-100 SH1
DWG ISS-8

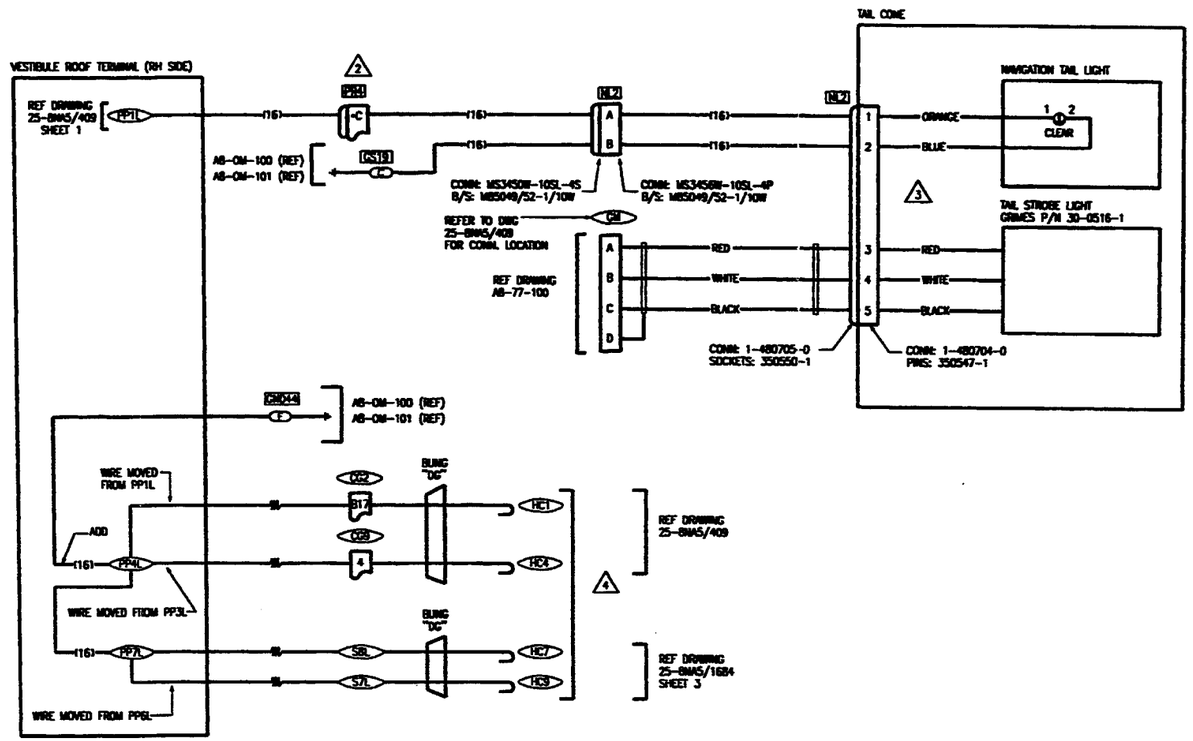

(-3) SHOWN

FOR NOTES SEE SHEET 1.

A8-7M-100 SH2
DWG ISS-5

H 33401008 SHT 3 REV 097

IDENT	PART NUMBER	1234567 NOMENCLATURE	EFFECT FROM TO	UNITS PER ASSY
		NAVIGATION,BEACON AND STROBE LIGHTS	091276	
	25-8NA5-409	WIRING DIAGRAM- (MOD 253149C) (MODIFIED BY A8-7M100-3)		RF
A-JA	HWBUN1146D10B	.TERMINAL BLOCK- (VK0574)		1
B61-DAD	25-8NF2217-7	.CIRCUIT BREAKER-7.5AMP (ALTERED FROM 483-96TCK14-7-5A (VU0091))		1
B62-DAD	25-8NF823-7	.CIRCUIT BREAKER-7.5AMP (ALTERED FROM D33107 (VK4358))		1
B71-DAD	463TCG11J25-5A	.CIRCUIT BREAKER-5AMP (VU0091)		1
CA-CG	1TP1-3M	.SWITCH- (V91929) (OPT (VK6596))		1
CB-CG	1TP1-3M	.SWITCH- (V91929) (OPT (VK6596))		1
CD-CG	1TP1-3M	.SWITCH- (V91929) (OPT (VK6596))		1
CGF-P	MTC100YH1-003	.SHELL-PLUG (VK1010) (USED WITH INSERT: MTC100YC1-006)		1
CGF-R	MTC100YH1-004	.SHELL-RECEPTACLE (VK1010) (USED WITH INSERT: MTC100YC1-005)		1
CGG-P	MTCR101-04P	.CONNECTOR-PIN (VK1010)		1
CGG-R	MTCR161-04S	.CONNECTOR-SOCKET (VK1010)		1
CG10-P	MTCR161-04P	.CONNECTOR-PIN (VK1010)		1
CG10-R	MTCR101-04S	.CONNECTOR-SOCKET (VK1010)		1
CG2-P	MTC100YH2-009	.SHELL-PLUG (VK1010) (USED WITH INSERTS: PRIMARY MTC100YC1-001 SECONDARY MTC100YC1-002)		1
		MISSING ITEM NO. NOT APPLICABLE		

– ITEM NOT ILLUSTRATED

IDENT	PART NUMBER	1234567 NOMENCLATURE	EFFECT FROM TO	UNITS PER ASSY
CG2-R	MTC100YH2-010	.SHELL-RECEPTACLE (VK1010) (USED WITH INSERTS: PRIMARY MTC100YC1-003 SECONDARY MTC100YC1-004)		1
CG7-P	MTC100YH2-009	.SHELL-PLUG (VK1010) (USED WITH INSERTS: PRIMARY MTC100YC1-001 SECONDARY MTC100YC1-002)		1
CG7-R	MTC100YH2-010	.SHELL-RECEPTACLE (VK1010) (USED WITH INSERTS: PRIMARY MTC100YC1-003 SECONDARY MTC100YC1-004)		1
CG9-P	MTCR161-04P	.CONNECTOR-PIN (VK1010)		1
CG9-R	MTCR101-04S	.CONNECTOR-SOCKET (VK1010)		1
DA20-P	MTC100YH2-009	.SHELL-PLUG (VK1010) (USED WITH INSERTS: PRIMARY MTC100YC1-001 SECONDARY MTC100YC1-002)		1
DA20-R	MTC100YH2-010	.SHELL-RECEPTACLE (VK1010) (USED WITH INSERTS: PRIMARY MTC100YC1-003 SECONDARY MTC100YC1-004)		1
DA22-P	MTCR161-04P	.CONNECTOR-PIN (VK1010)		1
DA22-R	MTCR101-04S	.CONNECTOR-SOCKET (VK1010)		1
DA23-P	MTCR161-04P	.CONNECTOR-PIN (VK1010)		1
DA23-R	MTCR101-04S	.CONNECTOR-SOCKET (VK1010)		1
DC	422254-8	.BUNG- (VK1793)		1
DG	422255-8	.BUNG- (VK1793)		1
DJ	422255-7	.BUNG- (VK1793)		1
GL	30-0516-1	.LIGHT-STROBE (VOBYW8)		1
GM-P	MS3456L10SL3SN	.CONNECTOR-SOCKET (VK1793)		1
GM-R	6026-14-5PCONDB	.CONNECTOR-PIN (VK1793)		1
HA	01-0790044-55	.BEACON-		1
		MISSING ITEM NO. NOT APPLICABLE		

– ITEM NOT ILLUSTRATED

IDENT	PART NUMBER	1234567 NOMENCLATURE	EFFECT FROM TO	UNITS PER ASSY
HA-R	AN3108E10SL3S	.SOCKET-RIGHT ANGLE (V71468) (OPT (VK0316))		1
HC	HWBUN1736S10B	.TERMINAL BLOCK- (VK0574)		1
HD	80-10-0200	.LIGHT-NAVIGATION (VK0690)		1
HE	HWBUN1146S5B	.TERMINAL BLOCK- (VK0574)		1
HP	HWBUN1736D5B	.TERMINAL BLOCK- (VK0574)		1
HQ	422250-16	.BUNG- (VK1793)		1
JG	30-0538-7	.LIGHT-NAVIGATION/STROBE (V0BYW8) (USED WITH: CONNECTOR MS3106R10SL3P CONNECTOR MS3106R10SL3S (VK0316) (OPT (V71468)))		1
JL	G9950-21	.BEACON- (V0BYW8)		1
JL-P	AN3106E10SL3S	.SHELL-PLUG (V71468) (OPT (VK0316))		1
KG	30-0538-8	.LIGHT-NAVIGATION/STROBE (V0BYW8) (USED WITH: CONNECTOR MS3106R10SL3P CONNECTOR MS3106R10SL3S (VK0316) (OPT (V71468)))		1
KK	72544-030-0AV2	.TERMINAL BLOCK- (VK0574)		1
NL1-P	M3456W10SL4P	.CONNECTOR-PLUG (V81349) (USED WITH: BACKSHELL M85049-52-1-10 (V71468))		1
NL1-R	M3450W10SL4S	.CONNECTOR-RECEPTACLE (V81349) (USED WITH: BACKSHELL M85049-52-1-10 (V71468))		1
NL2-P	1-480704-0	.CONNECTOR-PLUG (V00779) (USED WITH PIN: 350547-1)		1
		MISSING ITEM NO. NOT APPLICABLE		

– ITEM NOT ILLUSTRATED

IDENT	PART NUMBER	1234567 NOMENCLATURE	EFFECT FROM TO	UNITS PER ASSY
NL2-R	1-480705-0	.CAP-RECEPTACLE (V00779) (USED WITH SOCKET: 350550-1)		1
PP	HWBUN1146D10B	.TERMINAL BLOCK- (VK0574)		1
PR4-P	MS3126F22-41PW	.CONNECTOR-PLUG		1
PR4-R	MS3120F22-41SW	.CONNECTOR-RECEPTACLE		1
P1-JA-P	BAEREF000004313	.CONNECTOR-SOCKET (6027-24-61SWCONDD (VK1793))		1
P1-JA-R	BAEREF000003898	.CONNECTOR-PIN (6026-24-61PWCONDD (VK1793))		1
P3-JA-P	BAEREF000004157	.CONNECTOR-SOCKET (6027-22-41SWCONDD (VK1793))		1
P3-JA-R	BAEREF000004075	.CONNECTOR-PIN (6026-22-41PWCONDD (VK1793))		1
SW	60-3146-3	.POWER SUPPLY UNIT- (V0BYW8)		1
SW-P	MS3106R14S6SC	.CONNECTOR-SOCKET (V71468) (OPT (VK0316))		1
SX	60-3146-3	.POWER SUPPLY UNIT- (V0BYW8)		1
SX-P	MS3106R14S6SC	.CONNECTOR-SOCKET (V71468) (OPT (VK0316))		1
SY	60-3146-3	.POWER SUPPLY UNIT- (V0BYW8)		1
SY-P	MS3106R14S6SC	.CONNECTOR-SOCKET (V71468) (OPT (VK0316))		1
		MISSING ITEM NO. NOT APPLICABLE		

- ITEM NOT ILLUSTRATED

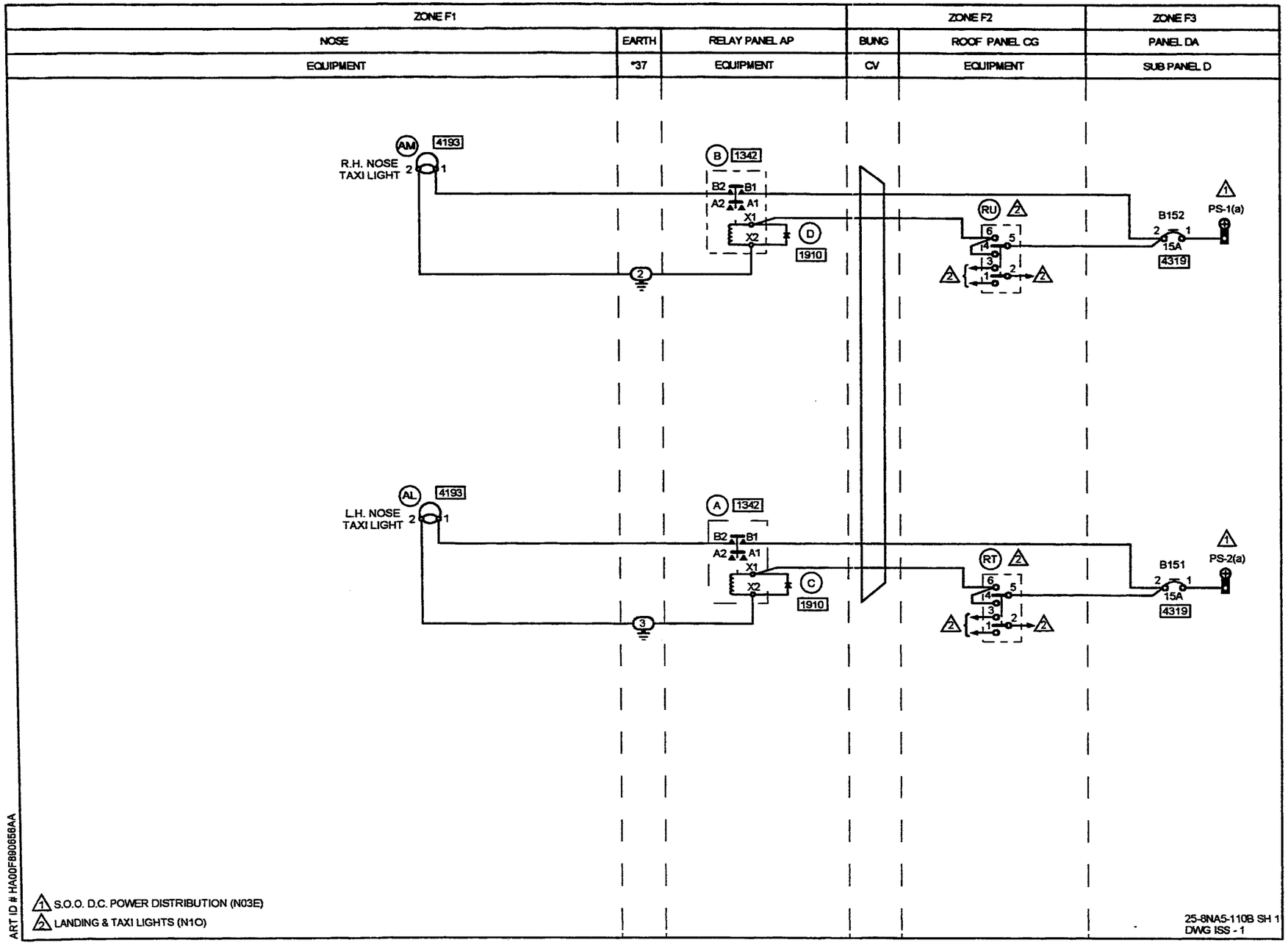
ZONE F1
ZONE F2
ZONE F3
NOSE
EARTH
RELAY PANEL AP
BUNG
ROOF PANEL CG
PANEL DA
EQUIPMENT
*37
EQUIPMENT
CV
EQUIPMENT
SUB PANEL D
AM
4193
R.H. NOSE
TAXI LIGHT
B
1342
B2
B1
A2
A1
X1
X2
D
1910
RU
B152
15A
4319
PS-1(a)
AL
4193
L.H. NOSE
TAXI LIGHT
A
1342
C
1910
RT
B151
15A
4319
PS-2(a)
S.O.O. D.C. POWER DISTRIBUTION (N03E)
LANDING & TAXI LIGHTS (N1O)
ART ID # HA00F8806568AA
25-8NA5-110B SH 1
DWG ISS - 1

IDENT	PART NUMBER	1234567 NOMENCLATURE	EFFECT FROM TO	UNITS PER ASSY
		TAXI LIGHTS IN NOSE	094094 120120 149149 167167 180180 208208 211211 219219 222222 224224 226228 233233 235235 237237 258258	
	25-8NA5-110B	WIRING DIAGRAM- (MOD 259163C)		RF
A-AP	7064-4656	.RELAY- (VK6265)		1
AL	GE4587	.LAMP-LH NOSE TAXI LIGHT (VK0657) (PRE MOD 259163D)	094094 120120 149149 167167 180180 208208 211211 219219 224224 226228 258258	1
AL	GE4594	.LAMP-LH NOSE TAXI LIGHT (VK0657) (MOD 259163D)		1
AM	GE4587	.LAMP-RH NOSE TAXI LIGHT (VK0657) (PRE MOD 259163D)	094094 120120 149149 167167 180180 208208 211211 219219 224224 226228 258258	1
AM	GE4594	.LAMP-RH NOSE TAXI LIGHT (VK0657) (MOD 259163D)		1
B-AP	7064-4656	.RELAY- (VK6265)		1
		MISSING ITEM NO. NOT APPLICABLE		

– ITEM NOT ILLUSTRATED

IDENT	PART NUMBER	1234567 NOMENCLATURE	EFFECT FROM TO	UNITS PER ASSY
B151-DAD	25-8NF2217-15	.CIRCUIT BREAKER-15A (ALTERED FROM 483-96TCK14-15A (VU0091))		1
B152-DAD	25-8NF2217-15	.CIRCUIT BREAKER-15A (ALTERED FROM 483-96TCK14-15A (VU0091))		1
C-AP	25-7NF1815-5A	.DIODE ASSY- (COMPRISING DIODE 1N4005 (VK5519) (OPT BYW54 (VK0004)))		1
CV	422253-15	.BUNG- (VK1793)		1
D-AP	25-7NF1815-5A	.DIODE ASSY- (COMPRISING DIODE 1N4005 (VK5519) (OPT BYW54 (VK0004)))		1
RT-CG	2TP1-1	.SWITCH- (V91929) (OPT (VK6596)) (PRE MOD 253210A)	094094	1
RT-CG	2TP1-1M	.SWITCH- (V91929) (OPT (VK6596)) (MOD 253210A)		1
RU-CG	2TP1-1	.SWITCH- (V91929) (OPT (VK6596)) (PRE MOD 253210A)	094094	1
RU-CG	2TP1-1M	.SWITCH- (V91929) (OPT (VK6596)) (MOD 253210A)		1

MISSING ITEM NO. NOT APPLICABLE

– ITEM NOT ILLUSTRATED

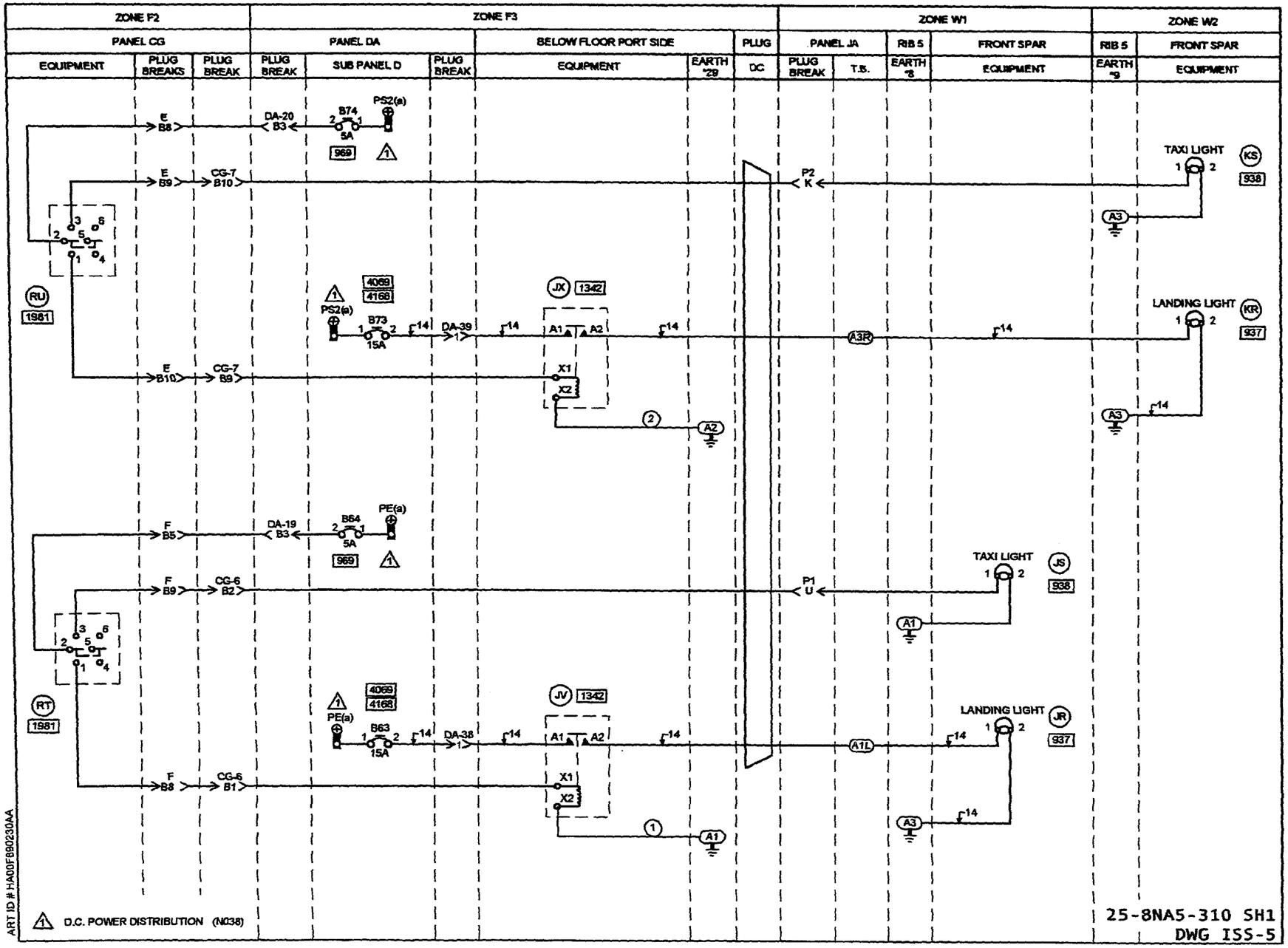
ZONE F2
ZONE F3
ZONE W1
ZONE W2
PANEL CG
PANEL DA
BELOW FLOOR PORT SIDE
PLUG
PANEL JA
RIB 5
FRONT SPAR
RIB 5
FRONT SPAR
EQUIPMENT
PLUG BREAKS
PLUG BREAK
PLUG BREAK
SUB PANEL D
PLUG BREAK
EQUIPMENT
EARTH *29
DC
PLUG BREAK
T.B.
EARTH *8
EQUIPMENT
EARTH *9
EQUIPMENT
TAXI LIGHT
LANDING LIGHT
TAXI LIGHT
LANDING LIGHT
D.C. POWER DISTRIBUTION (N038)
25-8NA5-310 SH1
DWG ISS-5
ART ID # HA00F890230AA

IDENT	PART NUMBER	1234567 NOMENCLATURE	EFFECT FROM TO	UNITS PER ASSY
		LANDING AND TAXI LIGHTS	091276	
	25-8NA5-310	WIRING DIAGRAM- (MOD 253149C)		RF
A-JA	HWBUN1146D10B	.TERMINAL BLOCK- (VK0574)		1
B63-DAD	25-8NF2217-15	.CIRCUIT BREAKER-15A (ALTERED FROM 483-96TCK14-15A (VU0091))		1
B64-DAD	483TCG11J25-5A	.CIRCUIT BREAKER-5A (VU0091)		1
B73-DAD	25-8NF2217-15	.CIRCUIT BREAKER-15A (ALTERED FROM 483-96TCK14-15A (VU0091))		1
B74-DAD	483TCG11J25-5A	.CIRCUIT BREAKER-5A (VU0091)		1
CG6-P	MTC100YH2-009	.SHELL-PLUG (VK1010) (USED WITH WAFERS: TYPE A, MTC100KT2-1101 TYPE B, MTC100KT2-1102)	091254	1
CG6-P	MTC100YH2-009	.SHELL-PLUG (VK1010) (USED WITH INSERTS: PRIMARY MTC100YC1-001 SECONDARY MTC100YC1-002) (MOD 253252A)	255276	1
CG6-R	MTC100YH2-010	.SHELL-RECEPTACLE (VK1010) (USED WITH WAFERS: TYPE A, MTC100KT2-1103 TYPE B, MTC100KT2-1104)	091254	1
CG6-R	MTC100YH2-010	.SHELL-RECEPTACLE (VK1010) (USED WITH INSERTS: PRIMARY MTC100YC1-003 SECONDARY MTC100YC1-004) (MOD 253252A)	255276	1
CG7-P	MTC100YH2-009	.SHELL-PLUG (VK1010) (USED WITH WAFERS: TYPE A, MTC100KT2-1101 TYPE B, MTC100KT2-1102)	091254	1
CG7-P	MTC100YH2-009	.SHELL-PLUG (VK1010) (USED WITH INSERTS: PRIMARY MTC100YC1-001 SECONDARY MTC100YC1-002) (MOD 253252A)	255276	1
		MISSING ITEM NO. NOT APPLICABLE		

– ITEM NOT ILLUSTRATED

IDENT	PART NUMBER	1234567 NOMENCLATURE	EFFECT FROM TO	UNITS PER ASSY
CG7-R	MTC100YH2-010	.SHELL-RECEPTACLE (VK1010) (USED WITH WAFERS: TYPE A, MTC100KT2-1103 TYPE B, MTC100KT2-1104)	091254	1
CG7-R	MTC100YH2-010	.SHELL-RECEPTACLE (VK1010) (USED WITH INSERTS: PRIMARY MTC100YC1-003 SECONDARY MTC100YC1-004) (MOD 253252A)	255276	1
DA19-P	MTC100YH2-009	.SHELL-PLUG (VK1010) (USED WITH WAFERS: TYPE A, MTC100KT2-1101 TYPE B, MTC100KT2-1102)	091254	1
DA19-P	MTC100YH2-009	.SHELL-PLUG (VK1010) (USED WITH INSERTS: PRIMARY MTC100YC1-001 SECONDARY MTC100YC1-002) (MOD 253252A)	255276	1
DA19-R	MTC100YH2-010	.SHELL-RECEPTACLE (VK1010) (USED WITH WAFERS: TYPE A, MTC100KT2-1103 TYPE B, MTC100KT2-1104)	091254	1
DA19-R	MTC100YH2-010	.SHELL-RECEPTACLE (VK1010) (USED WITH INSERTS: PRIMARY MTC100YC1-003 SECONDARY MTC100YC1-004) (MOD 253252A)	255276	1
DA20-P	MTC100YH2-009	.SHELL-PLUG (VK1010) (USED WITH WAFERS: TYPE A, MTC100KT2-1101 TYPE B, MTC100KT2-1102)	091254	1
DA20-P	MTC100YH2-009	.SHELL-PLUG (VK1010) (USED WITH INSERTS: PRIMARY MTC100YC1-001 SECONDARY MTC100YC1-002) (MOD 253252A)	255276	1
DA20-R	MTC100YH2-010	.SHELL-RECEPTACLE (VK1010) (USED WITH WAFERS: TYPE A, MTC100KT2-1103 TYPE B, MTC100KT2-1104)	091254	1
		MISSING ITEM NO. NOT APPLICABLE		

– ITEM NOT ILLUSTRATED

IDENT	PART NUMBER	1234567 NOMENCLATURE	EFFECT FROM TO	UNITS PER ASSY
DA20-R	MTC100YH2-010	.SHELL-RECEPTACLE (VK1010) (USED WITH INSERTS: PRIMARY MTC100YC1-003 SECONDARY MTC100YC1-004) (MOD 253252A)	255276	1
DA38-P	MTC16104P	.CONNECTOR-PIN (VK1010)		1
DA38-R	MTC10104S	.CONNECTOR-SOCKET (VK1010)		1
DA39-P	MTC16104P	.CONNECTOR-PIN (VK1010)		1
DA39-R	MTC10104S	.CONNECTOR-SOCKET (VK1010)		1
DC	422254-8	.BUNG- (VK1793)		1
E-CG-P	MTC100YH1-003	.SHELL-PLUG (VK1010) (USED WITH WAFERS: TYPE A, MTC100KT1-1103 TYPE B, MTC100KT1-1104)	091254	1
E-CG-P	MTC100YH1-003	.SHELL-PLUG (VK1010) (USED WITH INSERT: MTC100YC1-006) (MOD 253252A)	255276	1
E-CG-R	MTC100YH1-004	.SHELL-RECEPTACLE (VK1010) (USED WITH WAFERS: TYPE A, MTC100KT1-1101 TYPE B, MTC100KTI-1102)	091254	1
E-CG-R	MTC100YH1-004	.SHELL-RECEPTACLE (VK1010) (USED WITH INSERT: MTC100YC1-005) (MOD 253252A)	255276	1
F-CG-P	MTC100YH1-003	.SHELL-PLUG (VK1010) (USED WITH WAFERS: TYPE A, MTC100KT1-1103 TYPE B, MTC100KT1-1104)	091254	1
F-CG-P	MTC100YH1-003	.SHELL-PLUG (VK1010) (USED WITH INSERT: MTC100YC1-006) (MOD 253252A)	255276	1
		MISSING ITEM NO. NOT APPLICABLE		

— ITEM NOT ILLUSTRATED

IDENT	PART NUMBER	1234567 NOMENCLATURE	EFFECT FROM TO	UNITS PER ASSY
F-CG-R	MTC100YH1-004	.SHELL-RECEPTACLE (VK1010) (USED WITH WAFERS: TYPE A, MTC100KT1-1101 TYPE B, MTC100KTI-1102)	091254	1
F-CG-R	MTC100YH1-004	.SHELL-RECEPTACLE (VK1010) (USED WITH INSERT: MTC100YC1-005) (MOD 253252A)	255276	1
JR	GE4581	.LAMP-LANDING (VK0657)		1
JS	GE4594	.LAMP-TAXI (VK0657)		1
JV	M520U5N	.RELAY- (VK6265) (PRE MOD 253287A) (FOR SPARES PROCURE M520U5NL)	091215	1
JV	M520U5NL	.RELAY- (VK6265) (MOD 253287A) (FOR SPARES PROCURE IN LIEU OF M520U5N)	216276	1
JX	M520U5N	.RELAY- (VK6265) (PRE MOD 253287A) (FOR SPARES PROCURE M520U5NL)	091215	1
JX	M520U5NL	.RELAY- (VK6265) (MOD 253287A) (FOR SPARES PROCURE IN LIEU OF M520U5N)	216276	1
KR	GE4581	.LAMP-LANDING (VK0657)		1
KS	GE4594	.LAMP-TAXI (VK0657)		1
P1-JA-P	BAEREF000004328	.CONNECTOR-SOCKET (6027-24-61SWCONDD) (VK1793)		1
P1-JA-R	BAEREF000003898	.CONNECTOR-PIN (6026-24-61PWCONDD) (VK1793)		1
P2-JA-P	BAEREF000004329	.CONNECTOR-SOCKET (6027-22-41SNCONDD) (VK1793)		1
		MISSING ITEM NO. NOT APPLICABLE		

– ITEM NOT ILLUSTRATED

IDENT	PART NUMBER	1234567 NOMENCLATURE	EFFECT FROM TO	UNITS PER ASSY
P2-JA-R	BAEREF000004077	.CONNECTOR-PIN (6026-22-41PNCONDD) (VK1793)		1
RT-CG	2TP1-1	.SWITCH- (V91929) (OPT (VK6596)) (PRE MOD 253210A)	091116	1
RT-CG	2TP1-1M	.SWITCH- (V91929) (OPT (VK6596)) (MOD 253210A)		1
RU-CG	2TP1-1	.SWITCH- (V91929) (OPT (VK6596)) (PRE MOD 253210A)	091116	1
RU-CG	2TP1-1M	.SWITCH- (V91929) (OPT (VK6596)) (MOD 253210A)		1

MISSING ITEM NO. NOT APPLICABLE

– ITEM NOT ILLUSTRATED

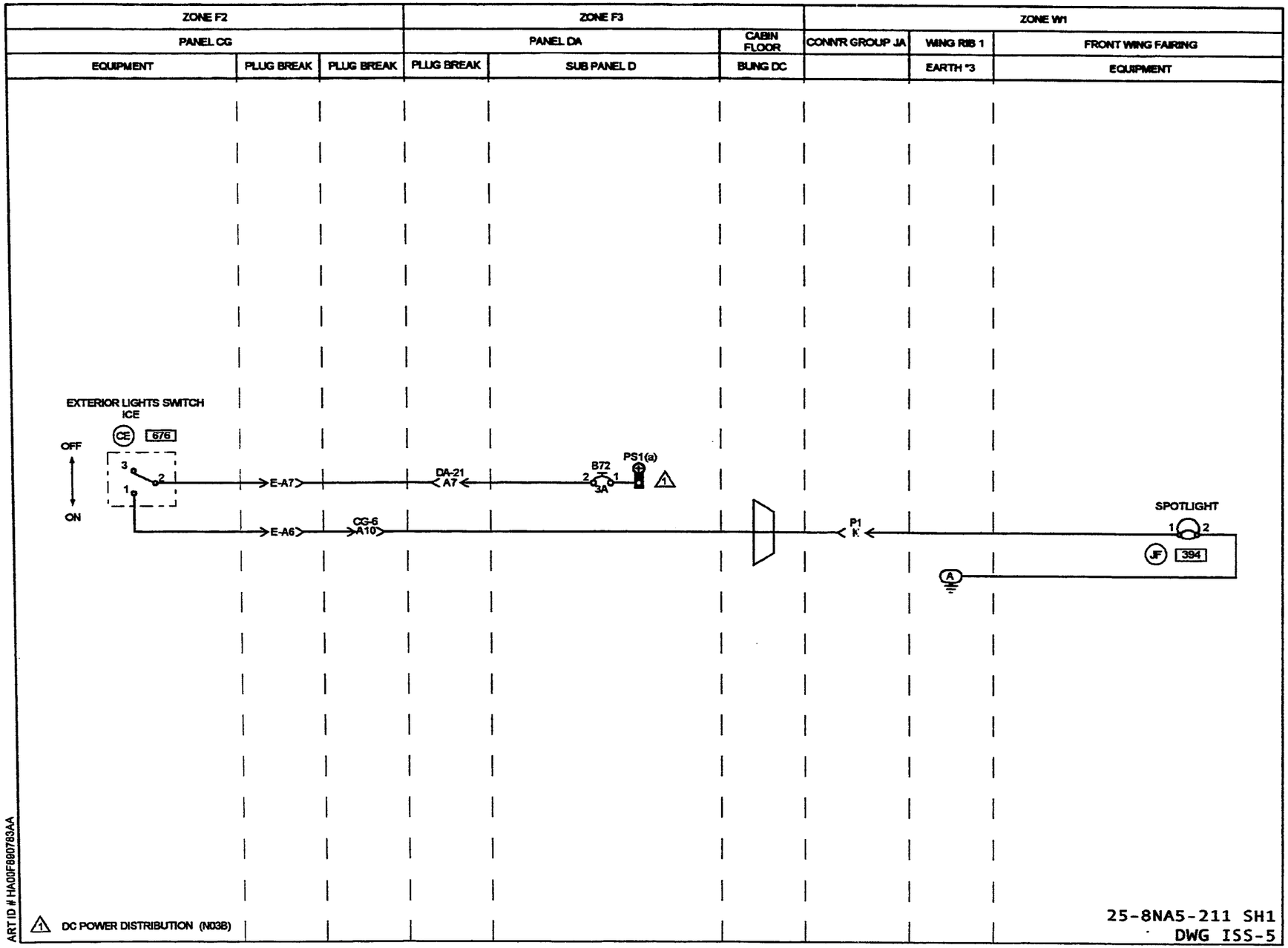
ZONE F2
ZONE F3
ZONE W1
PANEL CG
PANEL DA
CABIN FLOOR
CONN'R GROUP JA
WING RIB 1
FRONT WING FAIRING
EQUIPMENT
PLUG BREAK
PLUG BREAK
PLUG BREAK
SUB PANEL D
BUNG DC
EARTH *3
EQUIPMENT
EXTERIOR LIGHTS SWITCH
ICE
CE
676
OFF
ON
3
2
1
E-A7
E-A6
DA-21
A7
CG-6
A10
B72
3A
PS1(a)
P1
SPOTLIGHT
JF
394
A
DC POWER DISTRIBUTION (N03B)
25-8NA5-211 SH1
DWG ISS-5
ART ID # HA00F980783AA

IDENT	PART NUMBER	1234567 NOMENCLATURE	EFFECT FROM TO	UNITS PER ASSY
		WING INSPECTION SPOTLIGHT	091276	
	25-8NA5-211	WIRING DIAGRAM-		RF
		(MOD 253149C)		
		(MOD 25F505A)		
B72-DAD	483TCG11J25-3A	.CIRCUIT BREAKER-3AMP		1
		(VU0091)		
CE-CG	1TP1-3	.SWITCH-	091116	1
		(V91929)		
		(OPT (VK6596))		
CE-CG	1TP1-3M	.SWITCH-	117276	1
		(V91929)		
		(OPT (VK6596))		
CGE-P	MTC100YH1-003	.SHELL-PLUG	091254	1
		(VK1010)		
		(USED WITH WAFERS:		
		TYPE A, MTC100KT1-1103		
		TYPE B, MTC100KT1-1104)		
CGE-P	MTC100YH1-003	.SHELL-PLUG	255276	1
		(VK1010)		
		(USED WITH INSERT:		
		MTC100YC1-006)		
CGE-R	MTC100YH1-004	.SHELL-RECEPTACLE	091254	1
		(VK1010)		
		(USED WITH WAFERS:		
		TYPE A, MTC100KT1-1101		
		TYPE B, MTC100KTI-1102)		
CGE-R	MTC100YH1-004	.SHELL-RECEPTACLE	255276	1
		(VK1010)		
		(USED WITH INSERT:		
		MTC100YC1-005)		
CG6-P	MTC100YH2-009	.SHELL-PLUG	091254	1
		(VK1010)		
		(USED WITH WAFERS:		
		TYPE A, MTC100KT2-1101		
		TYPE B, MTC100KT2-1102)		
CG6-P	MTC100YH2-009	.SHELL-PLUG	255276	1
		(VK1010)		
		(USED WITH INSERTS:		
		PRIMARY MTC100YC1-001		
		SECONDARY MTC100YC1-002)		
CG6-R	MTC100YH2-010	.SHELL-RECEPTACLE	091254	1
		(VK1010)		
		(USED WITH WAFERS:		
		TYPE A, MTC100KT2-1103		
		TYPE B, MTC100KT2-1104)		
CG6-R	MTC100YH2-010	.SHELL-RECEPTACLE	255276	1
		(VK1010)		
		(USED WITH INSERTS:		
		PRIMARY MTC100YC1-003		
		SECONDARY MTC100YC1-004)		
		MISSING ITEM NO. NOT APPLICABLE		

– ITEM NOT ILLUSTRATED

IDENT	PART NUMBER	1234567 NOMENCLATURE	EFFECT FROM TO	UNITS PER ASSY
DA21-P	MTC100YH2-009	.SHELL-PLUG (VK1010) (USED WITH WAFERS: TYPE A, MTC100KT2-1101 TYPE B, MTC100KT2-1102)	091254	1
DA21-P	MTC100YH2-009	.SHELL-PLUG (VK1010) (USED WITH INSERTS: PRIMARY MTC100YC1-001 SECONDARY MTC100YC1-002)	255276	1
DA21-R	MTC100YH2-010	.SHELL-RECEPTACLE (VK1010) (USED WITH WAFERS: TYPE A, MTC100KT2-1103 TYPE B, MTC100KT2-1104)	091254	1
DA21-R	MTC100YH2-010	.SHELL-RECEPTACLE (VK1010) (USED WITH INSERTS: PRIMARY MTC100YC1-003 SECONDARY MTC100YC1-004)	255276	1
DC	422254-8	.BUNG- (VK1793)		1
JF	GE4505	.LAMP- (VK0657)		1
P1-JA-P	BAEREF000004328	.CONNECTOR-SOCKET (6027-24-61SWCONDD (VK1793))		1
P1-JA-R	BAEREF000003898	.CONNECTOR-PIN (6026-24-61PWCONDD (VK1793))		1
		MISSING ITEM NO. NOT APPLICABLE		

– ITEM NOT ILLUSTRATED

EMERGENCY

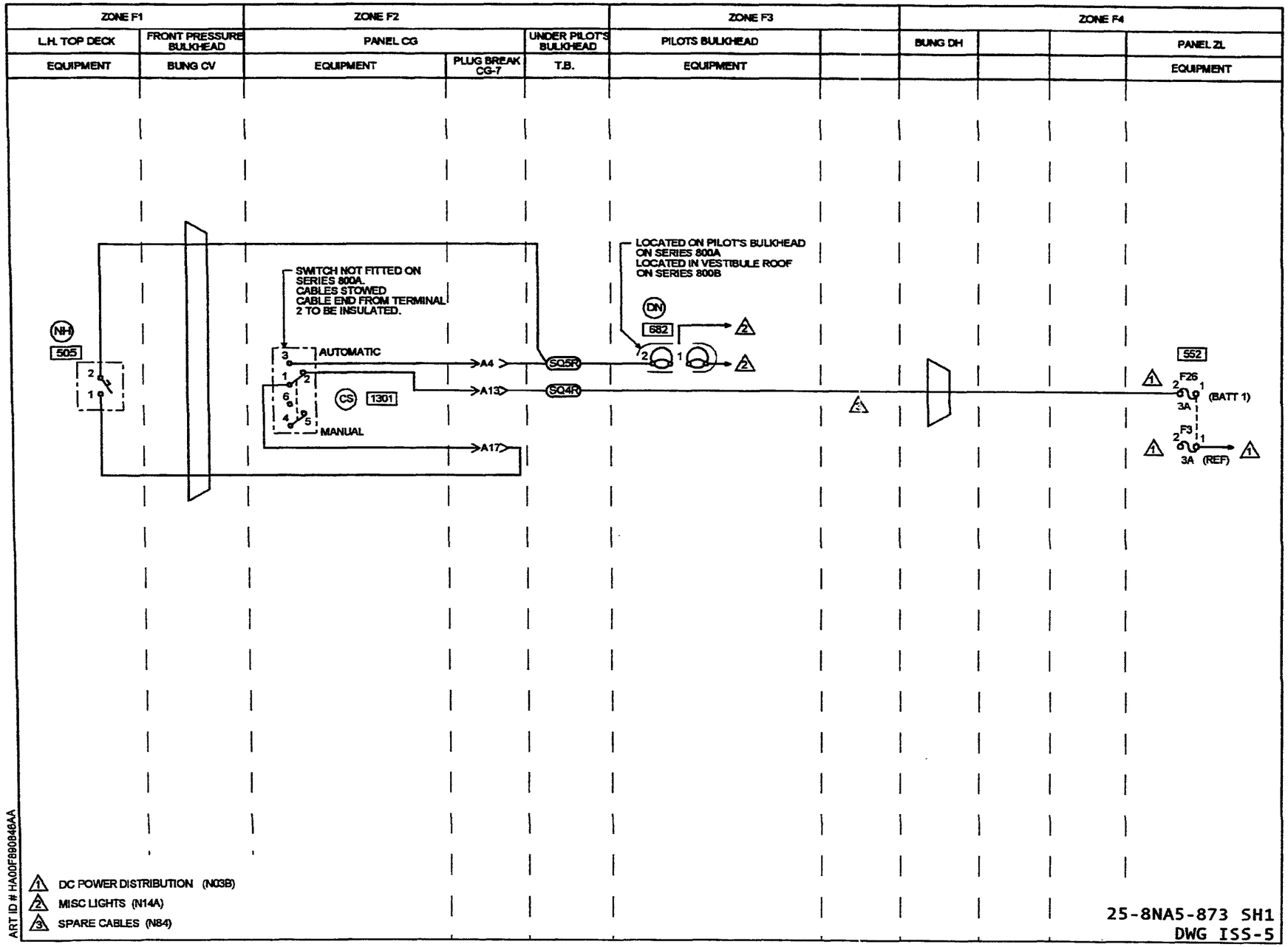
ZONE F1
ZONE F2
ZONE F3
ZONE F4
L.H. TOP DECK
FRONT PRESSURE BULKHEAD
PANEL CG
UNDER PILOT'S BULKHEAD
PILOTS BULKHEAD
BUNG DH
PANEL ZL
EQUIPMENT
BUNG CV
EQUIPMENT
PLUG BREAK CG-7
T.B.
EQUIPMENT
EQUIPMENT
SWITCH NOT FITTED ON SERIES 800A. CABLES STOWED CABLE END FROM TERMINAL 2 TO BE INSULATED.
LOCATED ON PILOT'S BULKHEAD ON SERIES 800A LOCATED IN VESTIBULE ROOF ON SERIES 800B
NH
505
AUTOMATIC
MANUAL
CS
1301
A4
A13
A17
SQ5R
SQ4R
DN
682
552
F26
3A
(BATT 1)
F3
3A
(REF)
DC POWER DISTRIBUTION (N03B)
MISC LIGHTS (N14A)
SPARE CABLES (N84)
ART ID # HA00F880846AA
25-8NA5-873 SH1
DWG ISS-5

IDENT	PART NUMBER	1234567 NOMENCLATURE	EFFECT FROM TO	UNITS PER ASSY
		EMERGENCY LIGHTS	091179 181189 191207 209210 212223 225225 228232 234234 236236 238276	
	25-8NA5-873	WIRING DIAGRAM- (MOD 253149C) (MOD 25F505A)		RF
CG7-P	MTC100YH2-009	.SHELL-PLUG (VK1010) (USED WITH WAFERS: TYPE A, MTC100KT2-1101 TYPE B, MTC100KT2-1102)	091179 181189 191207 209210 212223 225225 228232 234234 236236 238254	1
CG7-P	MTC100YH2-009	.SHELL-PLUG (VK1010) (USED WITH INSERTS: PRIMARY MTC100YC1-001 SECONDARY MTC100YC1-002)	255276	1
CG7-R	MTC100YH2-010	.SHELL-RECEPTACLE (VK1010) (USED WITH WAFERS: TYPE A, MTC100KT2-1103 TYPE B, MTC100KT2-1104)	091179 181189 191207 209210 212223 225225 228232 234234 236236 238254	1
CG7-R	MTC100YH2-010	.SHELL-RECEPTACLE (VK1010) (USED WITH INSERTS: PRIMARY MTC100YC1-003 SECONDARY MTC100YC1-004)	255276	1
CS-CG	2TP1-3	.SWITCH- (V91929) (OPT (VK6596))	091091 094094 097097 106106 109110 112112 115116	1
		MISSING ITEM NO. NOT APPLICABLE		

– ITEM NOT ILLUSTRATED

IDENT	PART NUMBER	1234567 NOMENCLATURE	EFFECT FROM TO	UNITS PER ASSY
CS-CG	2TP1-3M	.SWITCH-	118118	1
		(V91929)	120120	
		(OPT (VK6596))	130131	
			143143	
			146146	
			148149	
			164165	
			177177	
			182182	
			184184	
			186186	
			192192	
			194194	
			197198	
			210210	
			219219	
			222222	
			228228	
CV	422253-15	.BUNG-		1
		(VK1793)		
DH	422254-9	.BUNG-		1
		(VK1793)		
		MISSING ITEM NO. NOT APPLICABLE		

– ITEM NOT ILLUSTRATED

IDENT	PART NUMBER	1234567 NOMENCLATURE	EFFECT FROM TO	UNITS PER ASSY
DN	H1400	.LIGHT-VESTIBULE (VU1974)	092093 095096 098105 107108 111111 113114 117117 119119 121129 132142 144145 147147 150163 166176 178179 181181 183183 185185 187189 191191 193193 195196 199207 209209 212218 220221 223223 225225 229232 234234 236236 238276	1
		MISSING ITEM NO. NOT APPLICABLE		

– ITEM NOT ILLUSTRATED

IDENT	PART NUMBER	1234567 NOMENCLATURE	EFFECT FROM TO	UNITS PER ASSY
DN	H1800C1	.LAMP HOLDER- (VU1974)	091091 094094 097097 106106 109110 112112 115116 118118 120120 130131 143143 146146 148149 164165 177177 182182 184184 186186 192192 194194 197198 210210 219219 222222 228228	1
F26-ZL	5920-99-0120075	.FUSE-3AMP (VK0657)		1
F3-ZL	5920-99-0120075	.FUSE-3AMP (VK0657)		1
NH	18C2	.SWITCH-INERTIA (VK1536)		1
SQ	HWBUN1146D10B	.TERMINAL BLOCK- (VK0574)		1
		MISSING ITEM NO. NOT APPLICABLE		

– ITEM NOT ILLUSTRATED

CHAPTER

34

NAVIGATION

CHAPTER 34 - NAVIGATION

TABLE OF CONTENTS

SUBJECT	CHAPTER SECTION UNIT	FIGURE	EFFECT
MACH/AIRSPEED INDICATOR (ASI)	34-13-00		
MACH AND INDICATED AIRSPEED WARNING	34-13-01	4	091179
			181209
			212218
			220221
			223223
			225225
			229232
			234234
			236236
			238257
			259276
MACH AND INDICATED AIRSPEED WARNING	34-13-01	8	210211
			219219
			222222
			224224
			226228
			233233
			258258

CHAPTER 34 - NAVIGATION

TABLE OF CONTENTS

SUBJECT	CHAPTER SECTION UNIT	FIGURE	EFFECT
LANDING AND TAXIING AIDS	34-30-00		
VHF NAVIGATION SYSTEM NO.1 (VIR-32)	34-30-10	53	116117
			119145
			147147
			149163
			165276
VHF NAVIGATION SYSTEM NO.2 (VIR-32)	34-30-20	53	117117
			119119
			121145
			147147
			150163
			165166
			168176
			178181
			183193
			195276

CH-SECT-UNIT-FIG	PAGE NO.	DATE
*34	1	AUG 31/03
*34	2	AUG 31/03
34-13-00	1	MAY 31/02
34-13-01- 4	0	MAY 31/02
34-13-01- 4	1	NOV 30/02
34-13-01- 4	2	MAY 31/02
34-13-01- 4	3	MAY 31/02
34-13-01- 4	4	MAY 31/02
34-13-01- 4	5	MAY 31/02
34-13-01- 8	0	MAY 31/02
34-13-01- 8	1	MAY 31/02
34-13-01- 8	2	MAY 31/02
34-13-01- 8	3	MAY 31/02
34-13-01- 8	4	MAY 31/02
34-30-00	1	MAY 31/02
34-30-10-53	0	MAY 31/02
34-30-10-53	0A	MAY 31/02
34-30-10-53	1	MAY 31/02
34-30-10-53	2	MAY 31/02
34-30-10-53	3	MAY 31/02
34-30-20-53	0	NOV 30/02
34-30-20-53	0A	NOV 30/02
34-30-20-53	1	MAY 31/02
34-30-20-53	2	MAY 31/02
34-30-20-53	3	MAY 31/02

CH-SECT-UNIT-FIG	PAGE NO.	DATE

*THE ASTERISK INDICATES PAGES CHANGED OR ADDED BY THE CURRENT REVISION

MACH/AIRSPEED INDICATOR (ASI)

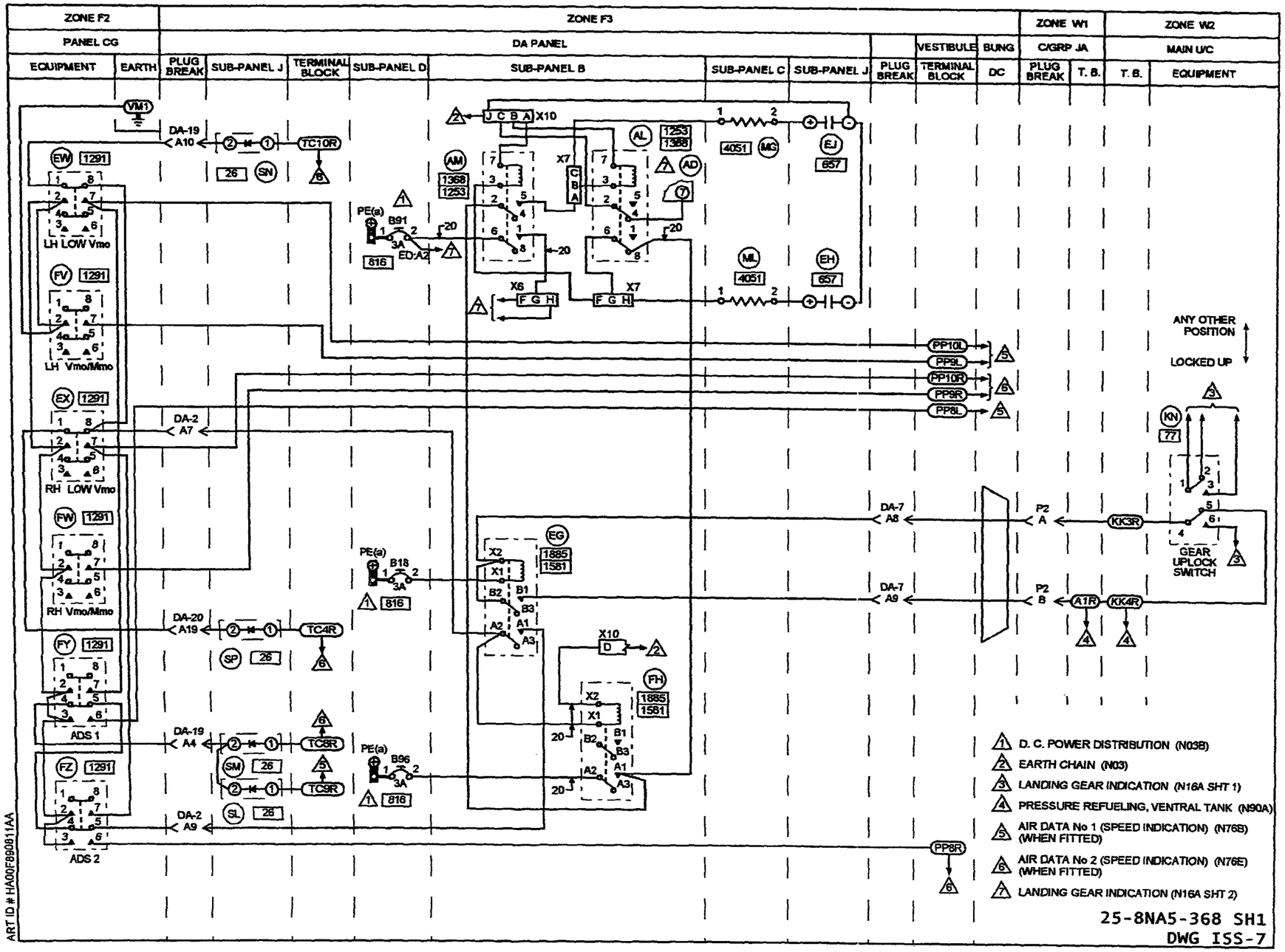
ZONE F2
ZONE F3
ZONE W1
ZONE W2
PANEL CG
DA PANEL
VESTIBULE
BUNG
C/GRP JA
MAIN U/C
EQUIPMENT
EARTH
PLUG BREAK
SUB-PANEL J
TERMINAL BLOCK
SUB-PANEL D
SUB-PANEL B
SUB-PANEL C
SUB-PANEL J
PLUG BREAK
TERMINAL BLOCK
DC
PLUG BREAK
T. B.
T. B.
EQUIPMENT
VM1
DA-19
A10
TC10R
EW 1291
LH LOW Vmo
FV 1291
LH Vmo/Mmo
EX 1291
RH LOW Vmo
FW 1291
RH Vmo/Mmo
FY 1291
ADS 1
FZ 1291
ADS 2
DA-2
A7
DA-20
A19
TC4R
DA-19
A4
TC8R
TC9R
DA-2
A9
PE(a)
B91
B18
B96
816
ED:A2
X10
X7
X6
AM
1368
1253
AL
1253
1368
AD
4051
MG
EJ
657
ML
4051
EH
657
EG
1885
1581
FH
1885
1581
PP10L
PP9L
PP10R
PP9R
PP8L
PP8R
DA-7
A8
DA-7
A9
P2
A
P2
B
KK3R
A1R
KK4R
KN
77
GEAR UPLOCK SWITCH
ANY OTHER POSITION
LOCKED UP
1 D. C. POWER DISTRIBUTION (N03B)
2 EARTH CHAIN (N03)
3 LANDING GEAR INDICATION (N16A SHT 1)
4 PRESSURE REFUELING, VENTRAL TANK (N90A)
5 AIR DATA No 1 (SPEED INDICATION) (N76B) (WHEN FITTED)
6 AIR DATA No 2 (SPEED INDICATION) (N76E) (WHEN FITTED)
7 LANDING GEAR INDICATION (N16A SHT 2)
25-8NA5-368 SH1
DWG ISS-7
ART ID # HA00F690811AA

	IDENT	PART NUMBER	1234567 NOMENCLATURE	EFFECT FROM TO	UNITS PER ASSY
			MACH AND INDICATED AIRSPEED WARNING	091179 181209 212218 220221 223223 225225 229232 234234 236236 238257 259276	
R R R R R R		25-8NA5-368	WIRING DIAGRAM- (MOD 253149C) (MOD 25F505A) (PRE MOD 259857A) (PRE MOD 25A095A) (PRE MOD 25F968A)		RF
	A-JA	HWBUN1146D10B	.TERMINAL BLOCK- (VK0574)		1
	AD-DAB	HDS8SF3J03	.RELAY- (VK1793) (USED WITH SOCKET: RSE120074 (V58982))		1
	AL-DAB	HDS8SF3J03	.RELAY- (VK1793) (USED WITH SOCKET: RSE120074 (V58982))		1
	AM-DAB	HDS8SF3J03	.RELAY- (VK1793) (USED WITH SOCKET: RSE120074 (V58982))		1
	B18-DAD	483TCG11J25-3A	.CIRCUIT BREAKER-3AMP (VU0091)		1
	B91-DAD	483TCG11J25-3A	.CIRCUIT BREAKER-3AMP (VU0091)		1
	B96-DAD	483TCG11J25-3A	.CIRCUIT BREAKER-3AMP (VU0091)		1
	DA19-P	MTC100YH2-009	.SHELL-PLUG (VK1010) (USED WITH WAFERS: TYPE A, MTC100KT2-1101 TYPE B, MTC100KT2-1102)	091179 181209 212218 220221 223223 225225 229232 234234 236236 238254	1
			MISSING ITEM NO. NOT APPLICABLE		

– ITEM NOT ILLUSTRATED

IDENT	PART NUMBER	1234567 NOMENCLATURE	EFFECT FROM TO	UNITS PER ASSY
DA19-P	MTC100YH2-009	.SHELL-PLUG (VK1010) (USED WITH INSERTS: PRIMARY MTC100YC1-001 SECONDARY MTC100YC1-002)	255257 259276	1
DA19-R	MTC100YH2-010	.SHELL-RECEPTACLE (VK1010) (USED WITH WAFERS: TYPE A, MTC100KT2-1103 TYPE B, MTC100KT2-1104)	091179 181209 212218 220221 223223 225225 229232 234234 236236 238254	1
DA19-R	MTC100YH2-010	.SHELL-RECEPTACLE (VK1010) (USED WITH INSERTS: PRIMARY MTC100YC1-003 SECONDARY MTC100YC1-004)	255257 259276	1
DA2-P	MTC100YH1-003	.SHELL-PLUG (VK1010) (USED WITH WAFERS: TYPE A, MTC100KT1-1101 TYPE B, MTC100KT1-1102)	091179 181209 212218 220221 223223 225225 229232 234234 236236 238254	1
DA2-P	MTC100YH1-003	.SHELL-PLUG (VK1010) (USED WITH INSERT: MTC100YC1-005)	255257 259276	1
DA2-R	MTC100YH1-004	.SHELL-RECEPTACLE (VK1010) (USED WITH WAFERS: TYPE A, MTC100KT1-1103 TYPE B, MTC100KT1-1104)	091179 181209 212218 220221 223223 225225 229232 234234 236236 238254	1
DA2-R	MTC100YH1-004	.SHELL-RECEPTACLE (VK1010) (USED WITH INSERT: MTC100YC1-006)	255257 259276	1

MISSING ITEM NO. NOT APPLICABLE

– ITEM NOT ILLUSTRATED

IDENT	PART NUMBER	1234567 NOMENCLATURE	EFFECT FROM TO	UNITS PER ASSY
DA20-P	MTC100YH2-009	.SHELL-PLUG (VK1010) (USED WITH WAFERS: TYPE A, MTC100KT2-1101 TYPE B, MTC100KT2-1102)	091179 181209 212218 220221 223223 225225 229232 234234 236236 238254	1
DA20-P	MTC100YH2-009	.SHELL-PLUG (VK1010) (USED WITH INSERTS: PRIMARY MTC100YC1-001 SECONDARY MTC100YC1-002)	255257 259276	1
DA20-R	MTC100YH2-010	.SHELL-RECEPTACLE (VK1010) (USED WITH WAFERS: TYPE A, MTC100KT2-1103 TYPE B, MTC100KT2-1104)	091179 181209 212218 220221 223223 225225 229232 234234 236236 238254	1
DA20-R	MTC100YH2-010	.SHELL-RECEPTACLE (VK1010) (USED WITH INSERTS: PRIMARY MTC100YC1-003 SECONDARY MTC100YC1-004)	255257 259276	1
DA7-P	MTC100YH1-003	.SHELL-PLUG (VK1010) (USED WITH WAFERS: TYPE A, MTC100KT1-1101 DUMMY, MTCX1X100-100)	091179 181209 212218 220221 223223 225225 229232 234234 236236 238254	1
DA7-P	MTC100YH1-003	.SHELL-PLUG (VK1010) (USED WITH INSERT: MTC100YC1-005)	255257 259276	1
		MISSING ITEM NO. NOT APPLICABLE		

– ITEM NOT ILLUSTRATED

IDENT	PART NUMBER	1234567 NOMENCLATURE	EFFECT FROM TO	UNITS PER ASSY
DA7-R	MTC100YH1-004	.SHELL-RECEPTACLE (VK1010) (USED WITH WAFERS: TYPE A, MTC100KT1-1103 DUMMY, MTCX1X100-100)	091179 181209 212218 220221 223223 225225 229232 234234 236236 238254	1
DA7-R	MTC100YH1-004	.SHELL-RECEPTACLE (VK1010) (USED WITH INSERT: MTC100YC1-006)	255257 259276	1
DC	422254-8	.BUNG- (VK1793)		1
EG-DAB	M300-1264	.RELAY- (VK6265) (USED WITH SOCKET: M12883-41-16 (V81349))		1
EH-DAJ	5910-99-0124911	.CAPACITOR- (VK1672)	091179 181209 212218 220221 223223 225225 229232 234234 236236 238257 259276	1
EW-CG	WC1503	.SWITCH- (VK0653)		1
EX-CG	WC1503	.SWITCH- (VK0653)		1
FH-DAB	M300-1264	.RELAY- (VK6265) (USED WITH SOCKET: M12883-41-16 (V81349))		1
FV-CG	WC1503	.SWITCH- (VK0653)		1
FW-CG	WC1503	.SWITCH- (VK0653)		1
FY-CG	WC1503	.SWITCH- (VK0653)		1
FZ-CG	WC1503	.SWITCH- (VK0653)		1
		MISSING ITEM NO. NOT APPLICABLE		

– ITEM NOT ILLUSTRATED

IDENT	PART NUMBER	1234567 NOMENCLATURE	EFFECT FROM TO	UNITS PER ASSY
KK	72544-030-0AV2	.TERMINAL BLOCK- (VK0574)		1
KN	1EN1-8N119	.MICRO SWITCH- (V91929) (OPT (VK6596))		1
MG-DAC	W22-2RPM5PCT	.RESISTOR- (VK0064)		1
ML-DAC	W22-2RPM5PCT	.RESISTOR- (VK0064)		1
PP	HWBUN1146D10B	.TERMINAL BLOCK- (VK0574)		1
P2-JA-P	BAEREF000004077	.CONNECTOR-PIN (6026-22-41PNCONDD (VK1793))		1
P2-JA-R	BAEREF000004329	.CONNECTOR-SOCKET (6027-22-41SNCONDD (VK1793))		1
SL-DAJ	CV7313	.DIODE- (VK00004)		1
SM-DAJ	CV7313	.DIODE- (VK0004)		1
SN-DAJ	CV7313	.DIODE- (VK0004)		1
SP-DAJ	CV7313	.DIODE- (VK0004)		1
TC	HWBUN1736D10B	.TERMINAL BLOCK- (VK0574)		1
X10-DAB	MRTB20E04-111	.TERMINAL JUNCTION MODULE- (V14283)		1
X6-DAB	MRTB20E57-111	.TERMINAL JUNCTION MODULE- (V14283)		1
X7-DAB	MRTB20E57-111	.TERMINAL JUNCTION MODULE- (V14283)		1
		MISSING ITEM NO. NOT APPLICABLE		

– ITEM NOT ILLUSTRATED

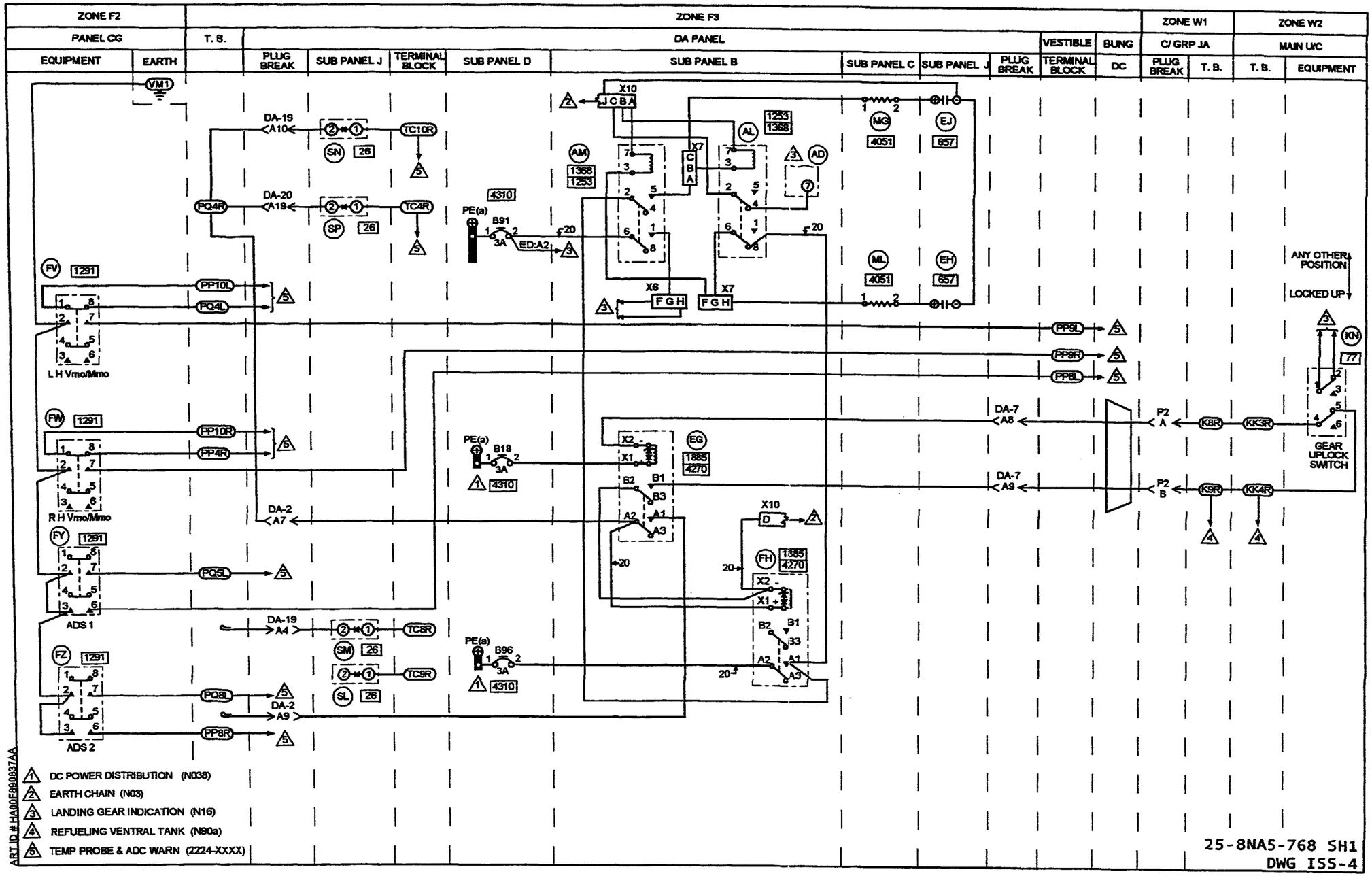
ZONE F2
ZONE F3
ZONE W1
ZONE W2
PANEL CG
T. B.
DA PANEL
VESTIBLE
BUNG
C/ GRP JA
MAIN U/C
EQUIPMENT
EARTH
PLUG BREAK
SUB PANEL J
TERMINAL BLOCK
SUB PANEL D
SUB PANEL B
SUB PANEL C
SUB PANEL J
PLUG BREAK
TERMINAL BLOCK
DC
PLUG BREAK
T. B.
T. B.
EQUIPMENT
VM1
DA-19
A10
TC10R
SN
26
DA-20
A19
TC4R
SP
PQ4R
PE(a)
B91
3A
ED:A2
4310
X10
J C B A
AM
1368
1253
X7
C B A
AL
1253
1368
AD
MG
4051
EJ
657
ML
4051
EH
657
X6
F G H
X7
F G H
FV
1291
PP10L
PQ4L
L H Vmo/Mmo
FW
1291
PP10R
PP4R
R H Vmo/Mmo
FY
1291
PQ5L
ADS 1
FZ
1291
PQ8L
PP8R
ADS 2
DA-2
A7
DA-2
A9
DA-19
A4
TC8R
SM
TC9R
SL
PE(a)
B18
PE(a)
B96
EG
1885
4270
FH
1885
4270
X10
D
PP9L
PP9R
PP8L
DA-7
A8
DA-7
A9
P2
A
P2
B
K8R
KK3R
K9R
KK4R
ANY OTHER POSITION
LOCKED UP
KN
77
GEAR UPLOCK SWITCH
1 DC POWER DISTRIBUTION (N038)
2 EARTH CHAIN (N03)
3 LANDING GEAR INDICATION (N16)
4 REFUELING VENTRAL TANK (N90a)
5 TEMP PROBE & ADC WARN (2224-XXXX)
ART ID # HA00F990837AA
25-8NA5-768 SH1
DWG ISS-4

IDENT	PART NUMBER	1234567 NOMENCLATURE	EFFECT FROM TO	UNITS PER ASSY
		MACH AND INDICATED AIRSPEED WARNING	210211 219219 222222 224224 226228 233233 258258	
	25-8NA5-768	WIRING DIAGRAM- (MOD 25A095A)		RF
AD-DAB	HDS8SF3J03	.RELAY- (VK1793) (USED WITH SOCKET: RSE120074 (V58982))		1
AL-DAB	HDS8SF3J03	.RELAY- (VK1793) (USED WITH SOCKET: RSE120074 (V58982))		1
AM-DAB	HDS8SF3J03	.RELAY- (VK1793) (USED WITH SOCKET: RSE120074 (V58982))		1
B18-DAD	483TCG11J25-3A	.CIRCUIT BREAKER-3AMP (VU0091)		1
B91-DAD	483TCG11J25-3A	.CIRCUIT BREAKER-3AMP (VU0091)		1
B96-DAD	483TCG11J25-3A	.CIRCUIT BREAKER-3AMP (VU0091)		1
DA19-P	MTC100YH2-009	.SHELL-PLUG (VK1010) (USED WITH WAFERS: TYPE A, MTC100KT2-1101 TYPE B, MTC100KT2-1102)	210211 219219 222222 224224 226228 233233 258258	1
DA19-P	MTC100YH2-009	.SHELL-PLUG (VK1010) (USED WITH INSERTS: PRIMARY MTC100YC1-001 SECONDARY MTC100YC1-002)		1
DA19-R	MTC100YH2-010	.SHELL-RECEPTACLE (VK1010) (USED WITH WAFERS: TYPE A, MTC100KT2-1103 TYPE B, MTC100KT2-1104)	210211 219219 222222 224224 226228 233233	1
		MISSING ITEM NO. NOT APPLICABLE		

- ITEM NOT ILLUSTRATED

IDENT	PART NUMBER	1234567 NOMENCLATURE	EFFECT FROM TO	UNITS PER ASSY
DA19-R	MTC100YH2-010	.SHELL-RECEPTACLE (VK1010) (USED WITH INSERTS: PRIMARY MTC100YC1-003 SECONDARY MTC100YC1-004)	258258	1
DA2-P	MTC100YH1-003	.SHELL-PLUG (VK1010) (USED WITH WAFERS: TYPE A, MTC100KT1-1101 TYPE B, MTC100KT1-1102)	210211 219219 222222 224224 226228 233233	1
DA2-P	MTC100YH1-003	.SHELL-PLUG (VK1010) (USED WITH INSERT: MTC100YC1-005)	258258	1
DA2-R	MTC100YH1-004	.SHELL-RECEPTACLE (VK1010) (USED WITH WAFERS: TYPE A, MTC100KT1-1103 TYPE B, MTC100KT1-1104)	210211 219219 222222 224224 226228 233233	1
DA2-R	MTC100YH1-004	.SHELL-RECEPTACLE (VK1010) (USED WITH INSERT: MTC100YC1-006)	258258	1
DA20-P	MTC100YH2-009	.SHELL-PLUG (VK1010) (USED WITH WAFERS: TYPE A, MTC100KT2-1101 TYPE B, MTC100KT2-1102)	210211 219219 222222 224224 226228 233233	1
DA20-P	MTC100YH2-009	.SHELL-PLUG (VK1010) (USED WITH INSERTS: PRIMARY MTC100YC1-001 SECONDARY MTC100YC1-002)	258258	1
DA20-R	MTC100YH2-010	.SHELL-RECEPTACLE (VK1010) (USED WITH WAFERS: TYPE A, MTC100KT2-1103 TYPE B, MTC100KT2-1104)	210211 219219 222222 224224 226228 233233	1
DA20-R	MTC100YH2-010	.SHELL-RECEPTACLE (VK1010) (USED WITH INSERTS: PRIMARY MTC100YC1-003 SECONDARY MTC100YC1-004)	258258	1

MISSING ITEM NO. NOT APPLICABLE

– ITEM NOT ILLUSTRATED

IDENT	PART NUMBER	1234567 NOMENCLATURE	EFFECT FROM TO	UNITS PER ASSY
DA7-P	MTC100YH1-003	.SHELL-PLUG (VK1010) (USED WITH WAFERS: TYPE A, MTC100KT1-1101 DUMMY, MTCX1X100-100)	210211 219219 222222 224224 226228 233233	1
DA7-P	MTC100YH1-003	.SHELL-PLUG (VK1010) (USED WITH INSERT: MTC100YC1-005)	258258	1
DA7-R	MTC100YH1-004	.SHELL-RECEPTACLE (VK1010) (USED WITH WAFERS: TYPE A, MTC100KT1-1103 DUMMY, MTCX1X100-100)	210211 219219 222222 224224 226228 233233	1
DA7-R	MTC100YH1-004	.SHELL-RECEPTACLE (VK1010) (USED WITH INSERT: MTC100YC1-006)	258258	1
DC	422254-8	.BUNG- (VK1793)		1
EG-DAB	M300-1264	.RELAY- (VK6265) (USED WITH SOCKET: M12883-41-16 (V81349))		1
EH-DAJ	5910-99-0124911	.CAPACITOR- (VK1672)		1
FH-DAB	M300-1264	.RELAY- (VK6265) (USED WITH SOCKET: M12883-41-16 (V81349))		1
FV-CG	WC1503	.SWITCH- (VK0653)		1
FW-CG	WC1503	.SWITCH- (VK0653)		1
FY-CG	WC1503	.SWITCH- (VK0653)		1
FZ-CG	WC1503	.SWITCH- (VK0653)		1
JA-P2-P	BAEREF000004077	.CONNECTOR-PIN (6026-22-41PNCONDD (VK1793))		1
JA-P2-R	BAEREF000004329	.CONNECTOR-SOCKET (6027-22-41SNCONDD (VK1793))		1
K-JA	HWBUN1146D10B	.TERMINAL BLOCK- (VK0574)		1
		MISSING ITEM NO. NOT APPLICABLE		

– ITEM NOT ILLUSTRATED

IDENT	PART NUMBER	1234567 NOMENCLATURE	EFFECT FROM TO	UNITS PER ASSY
KK	72544-030-0AV2	.TERMINAL BLOCK- (VK0574)		1
KN	1EN1-8N119	.MICRO SWITCH- (V91929) (OPT (VK6596))		1
MG-DAC	W22-2RPM5PCT	.RESISTOR- (VK0064)		1
ML-DAC	W22-2RPM5PCT	.RESISTOR- (VK0064)		1
PP	HWBUN1146D10B	.TERMINAL BLOCK- (VK0574)		1
PQ	HWBUN1146D10B	.TERMINAL BLOCK- (VK0574)		1
SL-DAJ	CV7313	.DIODE- (VK0004)		1
SM-DAJ	CV7313	.DIODE- (VK0004)		1
SN-DAJ	CV7313	.DIODE- (VK0004)		1
SP-DAJ	CV7313	.DIODE- (VK0004)		1
TC	HWBUN1736D10B	.TERMINAL BLOCK- (VK0574)		1
X10-DAB	MRTB20E04-111	.TERMINAL JUNCTION MODULE- (V14283)		1
X6-DAB	MRTB20E57-111	.TERMINAL JUNCTION MODULE- (V14283)		1
X7-DAB	MRTB20E57-111	.TERMINAL JUNCTION MODULE- (V14283)		1
		MISSING ITEM NO. NOT APPLICABLE		

– ITEM NOT ILLUSTRATED

LANDING AND TAXIING AIDS

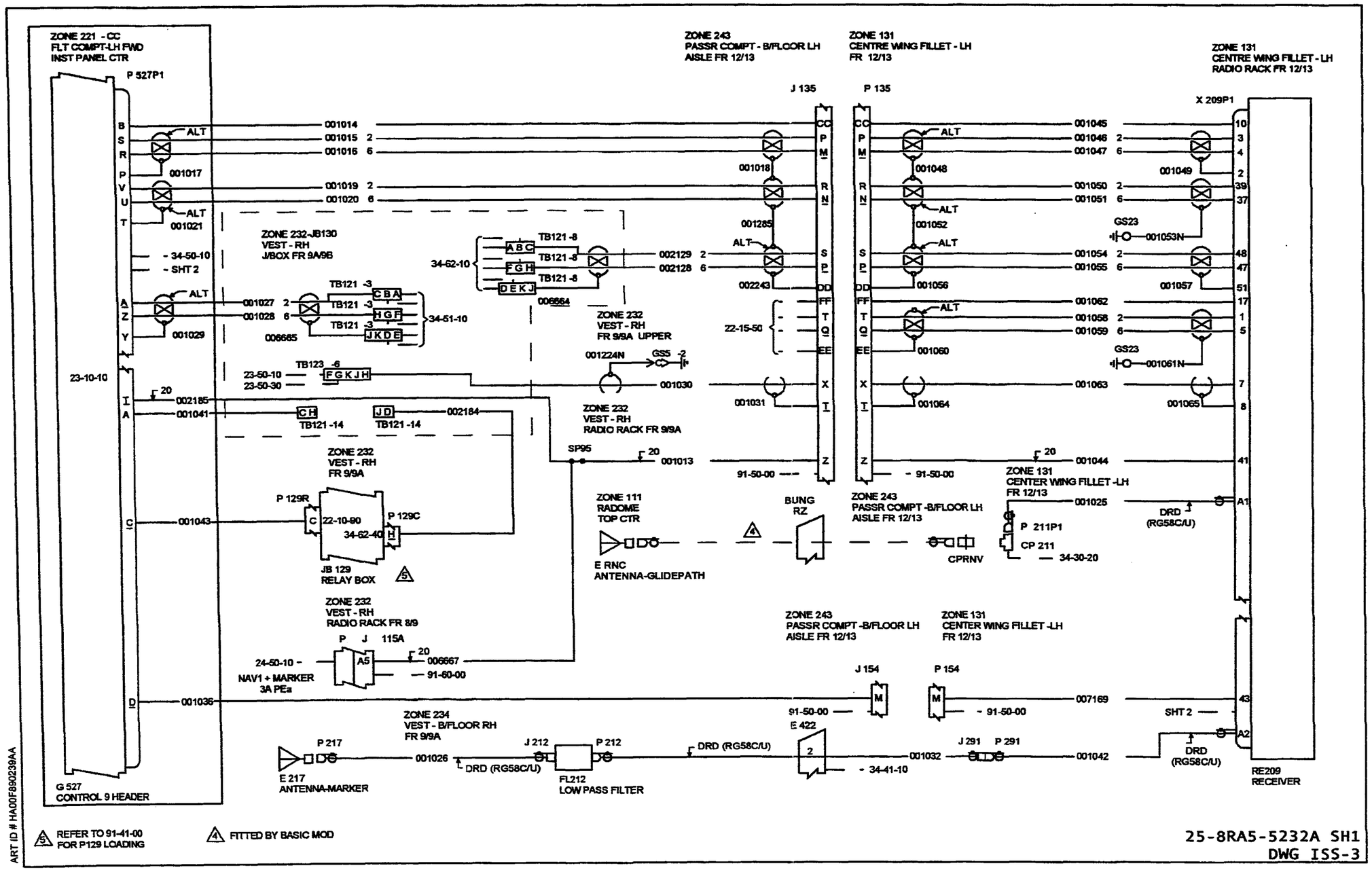
ZONE 221 - CC
FLT COMPT-LH FWD
INST PANEL CTR
P 527P1
ZONE 243
PASSR COMPT - B/FLOOR LH
AISLE FR 12/13
J 135
ZONE 131
CENTRE WING FILLET - LH
FR 12/13
P 135
ZONE 131
CENTRE WING FILLET - LH
RADIO RACK FR 12/13
X 209P1
ZONE 232-JB130
VEST - RH
J/BOX FR 9A/9B
ZONE 232
VEST - RH
FR 9/9A UPPER
ZONE 232
VEST - RH
RADIO RACK FR 9/9A
ZONE 232
VEST - RH
FR 9/9A
P 129R
22-10-90
34-62-40
P 129C
JB 129
RELAY BOX
ZONE 232
VEST - RH
RADIO RACK FR 8/9
NAV1 + MARKER
3A PEa
ZONE 111
RADOME
TOP CTR
E RNC
ANTENNA-GLIDEPATH
BUNG
RZ
ZONE 243
PASSR COMPT -B/FLOOR LH
AISLE FR 12/13
CPRNV
ZONE 131
CENTER WING FILLET -LH
FR 12/13
P 211P1
CP 211
34-30-20
ZONE 234
VEST - B/FLOOR RH
FR 9/9A
E 217
ANTENNA-MARKER
FL212
LOW PASS FILTER
E 422
J 154
P 154
RE209
RECEIVER
G 527
CONTROL 9 HEADER
REFER TO 91-41-00
FOR P129 LOADING
FITTED BY BASIC MOD
25-8RA5-5232A SH1
DWG ISS-3
ART ID # HA00F8890239AA

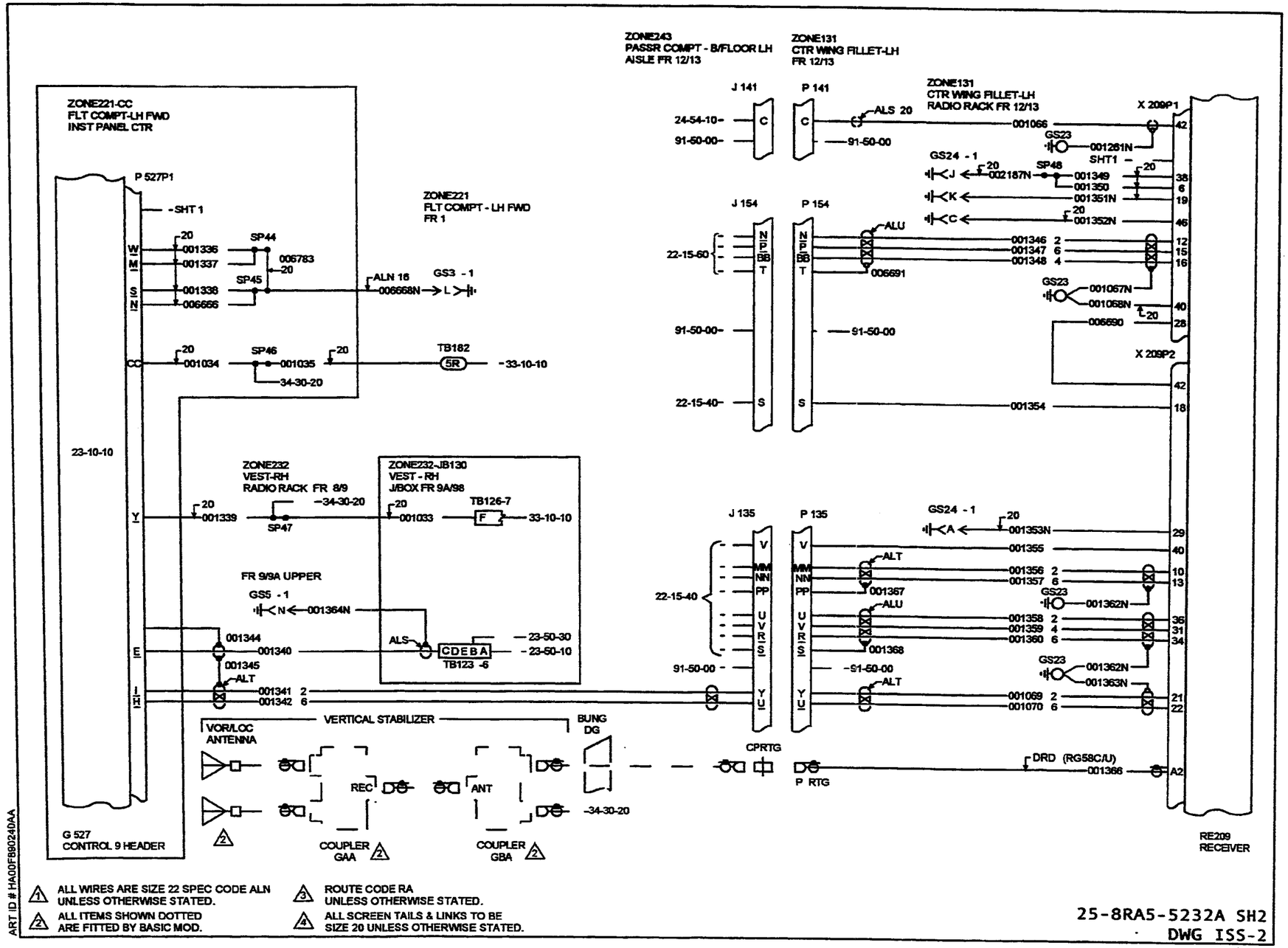

1. ALL WIRES ARE SIZE 22 SPEC CODE ALN UNLESS OTHERWISE STATED.
2. ALL ITEMS SHOWN DOTTED ARE FITTED BY BASIC MOD.
3. ROUTE CODE RA UNLESS OTHERWISE STATED.
4. ALL SCREEN TAILS & LINKS TO BE SIZE 20 UNLESS OTHERWISE STATED.

25-8RA5-5232A SH2
DWG ISS-2

ART ID # HA00FB90240AA

IDENT	PART NUMBER	1234567 NOMENCLATURE	EFFECT FROM TO	UNITS PER ASSY
		VHF NAVIGATION SYSTEM NO.1 (VIR-32)	116117 119145 147147 149163 165276	
	25-8RA5-5232A	WIRING DIAGRAM- (MOD 253090B) (MOD 259715A) (MOD 259762B) (MOD 259782A)		RF
CPRNV	79100	.ADAPTOR-COAXIAL (VK1100)		1
CPRTG	79100	.ADAPTOR-COAXIAL (VK1100)		1
CP211	43TNC50-0-1	.T JUNCTION-COAXIAL (VK5835)		1
ERNC	DMN1-2	.AERIAL-GLIDESLOPE (V85226)		1
E217	37X2	.ANTENNA- (V4V792) (OPT (VK0652)) (PRE MOD 253295A)		1
E217	17-5C	.ANTENNA- (VU1907) (MOD 253295A)		1
E422	422254-10	.BUNG- (VK1793)		1
FL212	LC04B	.FILTER- (V04387)		1
J115A	MTC100YH1-004	.SHELL-RECEPTACLE (VK1010) (USED WITH WAFERS: TYPE A, MTC100KT1-1101 TYPE B, MTC100KT1-1102)	116117 119145 147147 149163 165254	1
J115A	MTC100YH1-004	.SHELL-RECEPTACLE (VK1010) (USED WITH INSERT: MTC100YC1-005)	255276	1
J135	D38999-24WJ61SN	.CONNECTOR- (V77820) (USED WITH BACKSHELL: G8802-25N (VU0419))		1
J141	D38999-24WG39SN	.CONNECTOR-SOCKET (V77820) (USED WITH BACKSHELL: G8802-21N (VU0419))		1
		MISSING ITEM NO. NOT APPLICABLE		

- ITEM NOT ILLUSTRATED

IDENT	PART NUMBER	1234567 NOMENCLATURE	EFFECT FROM TO	UNITS PER ASSY
J154	D38999-24WH53SN	.CONNECTOR-SOCKET (V77820) (USED WITH BACKSHELL: G8802-23N (VU0419))		1
J212	2-329452-1	.CONNECTOR-COAXIAL (VK1636)		1
J291	225551-2	.CONNECTOR-COAXIAL (VK1636)		1
PRTG	82-5375	.CONNECTOR-COAXIAL (VK1100)		1
P129C	BAEREF000003902	.CONNECTOR-SOCKET (6026-24-61SWCONDD (VK1793))		1
P129R	BAEREF000003897	.CONNECTOR-SOCKET (6026-22-55SNCONDD (VK1793))		1
P135	D38999-26WJ61PN	.CONNECTOR- (V77820) (USED WITH BACKSHELL: G8802-25N (VU0419))		1
P141	D38999-26WG39PN	.CONNECTOR-PIN (V77820) (USED WITH BACKSHELL: G8802-21N (VU0419))		1
P154	D38999-26WH53PN	.CONNECTOR-PIN (V77820) (USED WITH BACKSHELL: G8802-23N (VU0419))		1
P211P1	225550-2	.CONNECTOR-COAXIAL (VK1636)		1
P212	2-329444-1	.CONNECTOR-COAXIAL (VK1636)		1
P217	225830-2	.CONNECTOR-COAXIAL (VK1636)		1
P291	225550-2	.CONNECTOR-COAXIAL (VK1793)		1
P527P1	BAEREF000003408	.CONNECTOR- (6026-22-55SNCONDB (VK1793)) (USED WITH BACKSHELL: GTR42-22NACS1 (VU0419))		1
RE209	622-6137-001	.RECEIVER- (VK0652)		1
TB121-14	MRTB20E09	.TERMINAL JUNCTION MODULE- (V14283)		1
		MISSING ITEM NO. NOT APPLICABLE		

– ITEM NOT ILLUSTRATED

IDENT	PART NUMBER	1234567 NOMENCLATURE	EFFECT FROM TO	UNITS PER ASSY
TB121-3	MRTB20E57	.TERMINAL JUNCTION MODULE- (V14283)		1
TB121-8	MRTB20E57	.TERMINAL JUNCTION MODULE- (V14283)		1
TB123-6	MRTB20E57	.TERMINAL JUNCTION MODULE- (V14283)		1
TB126-7	MRTB20E04	.TERMINAL JUNCTION MODULE- (V14283)		1
TB182	HWBUN1736D10B	.TERMINAL BLOCK- (VK0574)		1
X209P1	653-1258-001	.CONNECTOR- (VK0652) (USED WITH: GUIDE 653-1248-001 SCREW 335-0074-000)		1
X209P2	653-1258-001	.CONNECTOR- (VK0652) (USED WITH: GUIDE 653-1248-001 SCREW 335-0074-000)		1
		MISSING ITEM NO. NOT APPLICABLE		

– ITEM NOT ILLUSTRATED

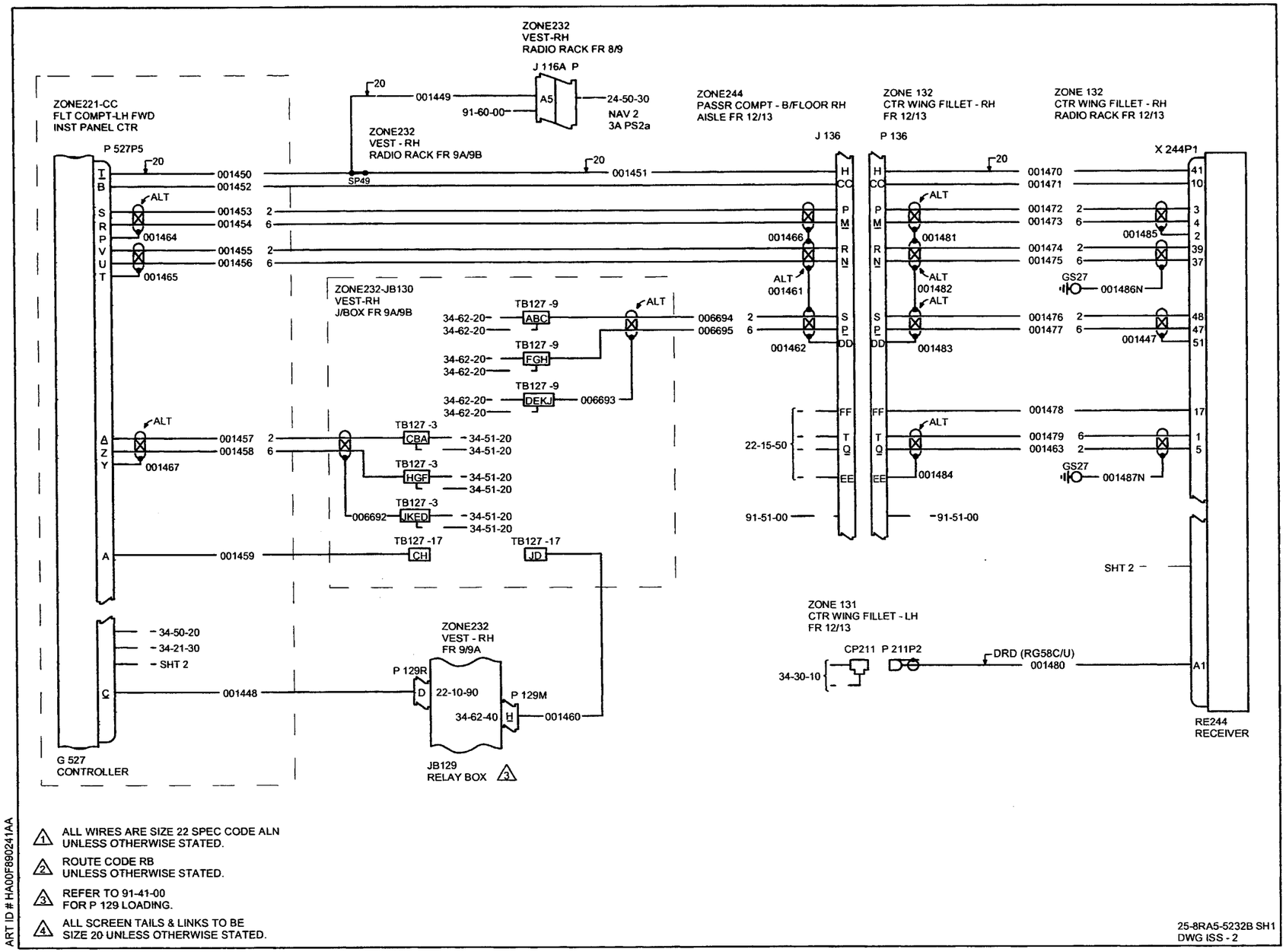

1. ALL WIRES ARE SIZE 22 SPEC CODE ALN UNLESS OTHERWISE STATED.
2. ROUTE CODE RB UNLESS OTHERWISE STATED.
3. REFER TO 91-41-00 FOR P 129 LOADING.
4. ALL SCREEN TAILS & LINKS TO BE SIZE 20 UNLESS OTHERWISE STATED.

ART ID # HA00F990241AA

25-8RA5-5232B SH1
DWG ISS - 2

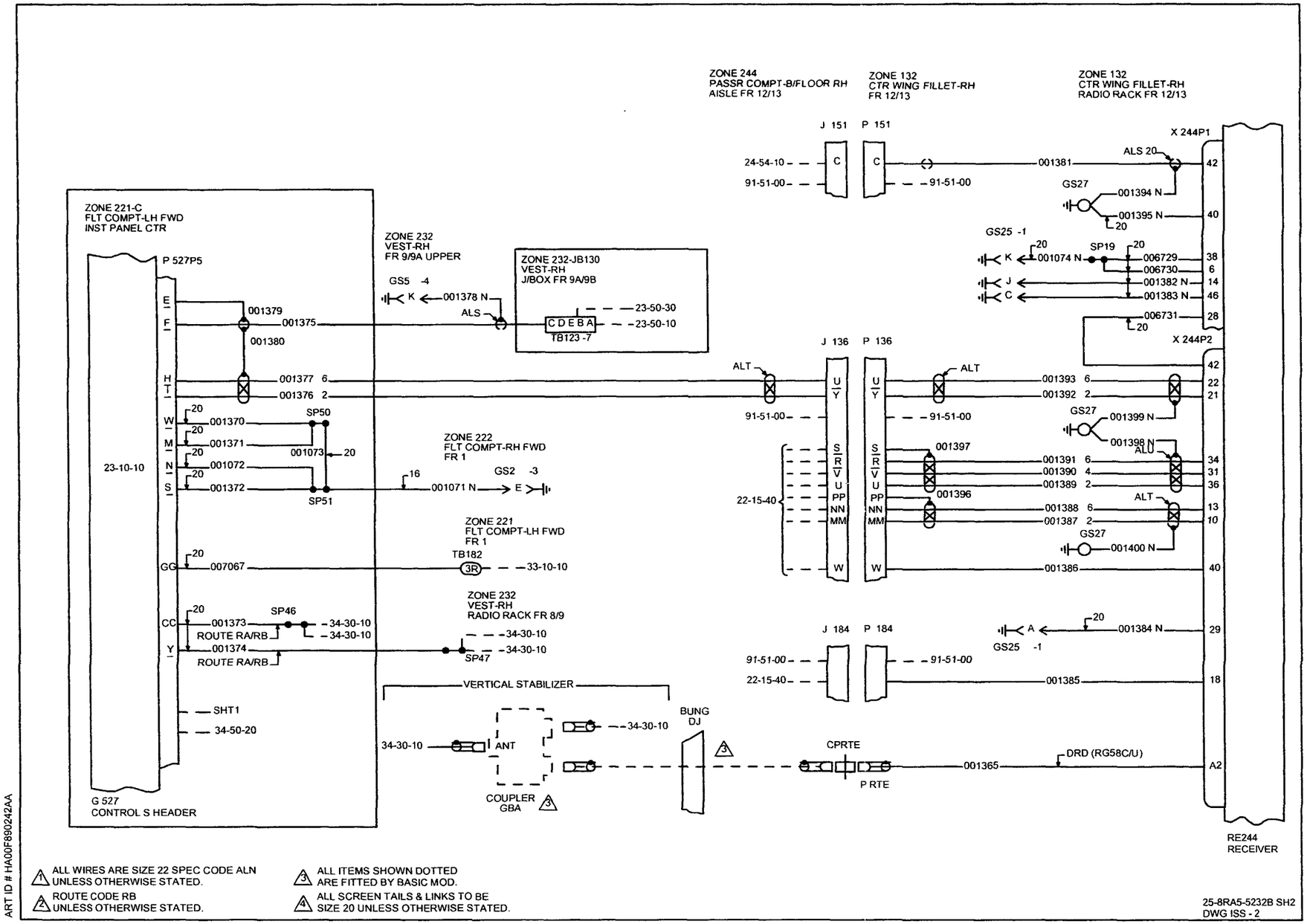
ZONE 244
PASSR COMPT-B/FLOOR RH
AISLE FR 12/13
ZONE 132
CTR WING FILLET-RH
FR 12/13
ZONE 132
CTR WING FILLET-RH
RADIO RACK FR 12/13
J 151
P 151
X 244P1
24-54-10
91-51-00
001381
ALS 20
GS27
001394 N
001395 N
GS25 -1
001074 N
SP19
006729
006730
001382 N
001383 N
006731
X 244P2
ZONE 221-C
FLT COMPT-LH FWD
INST PANEL CTR
P 527P5
ZONE 232
VEST-RH
FR 9/9A UPPER
GS5 -4
001378 N
ALS
ZONE 232-JB130
VEST-RH
J/BOX FR 9A/9B
23-50-30
23-50-10
TB123 -7
001379
001375
001380
001377
001376
J 136
P 136
ALT
001393
001392
001399 N
001398 N
001370
001371
001072
001372
SP50
001073
SP51
23-10-10
ZONE 222
FLT COMPT-RH FWD
FR 1
001071 N
GS2 -3
001397
001391
001390
001389
001396
22-15-40
001388
001387
001400 N
001386
ZONE 221
FLT COMPT-LH FWD
FR 1
TB182
007067
33-10-10
ZONE 232
VEST-RH
RADIO RACK FR 8/9
001373
SP46
34-30-10
ROUTE RA/RB
001374
SP47
J 184
P 184
001384 N
GS25 -1
001385
VERTICAL STABILIZER
SHT1
34-50-20
BUNG
DJ
ANT
CPRTE
P RTE
001365
DRD (RG58C/U)
G 527
CONTROL S HEADER
COUPLER
GBA
RE244
RECEIVER
ALL WIRES ARE SIZE 22 SPEC CODE ALN
UNLESS OTHERWISE STATED.
ROUTE CODE RB
UNLESS OTHERWISE STATED.
ALL ITEMS SHOWN DOTTED
ARE FITTED BY BASIC MOD.
ALL SCREEN TAILS & LINKS TO BE
SIZE 20 UNLESS OTHERWISE STATED.
ART ID # HA00F890242AA
25-8RA5-5232B SH2
DWG ISS - 2

IDENT	PART NUMBER	1234567 NOMENCLATURE	EFFECT FROM TO	UNITS PER ASSY
		VHF NAVIGATION SYSTEM NO.2 (VIR-32)	117117 119119 121145 147147 150163 165166 168176 178181 183193 195276	
	25-8RA5-5232B	WIRING DIAGRAM- (MOD 253090B) (MOD 259715A) (MOD 259742A) (MOD 259762B) (MOD 259782A)		RF
CPRTE	82-849	.ADAPTOR-COAXIAL (VK1100)		1
CP211	43TNC50-0-1	.JUNCTION-TEE,COAXIAL (VK5835)		1
G527	G6868-04	.CONTROLLER-9 HEADER (V99837)		1
J116A	MTC100YH1-004	.SHELL-RECEPTACLE (VK1010) (USED WITH WAFERS: TYPE A, MTC100KT1-1101 TYPE B, MTC100KT1-1102)	117117 119119 121145 147147 150163 165166 168176 178181 183193 195254 255276	1
J116A	MTC100YH1-004	.SHELL-RECEPTACLE (VK1010) (USED WITH INSERT: MTC100YC1-005)		1
J136	D38999-24WJ61SN	.CONNECTOR-SOCKET (V77820) (USED WITH BACKSHELL: G8802-25N (VU0419))		1
J151	D38999-24WG39SN	.CONNECTOR-SOCKET (V77820) (USED WITH BACKSHELL: G8802-21N (VU0419))		1
		MISSING ITEM NO. NOT APPLICABLE		

– ITEM NOT ILLUSTRATED

IDENT	PART NUMBER	1234567 NOMENCLATURE	EFFECT FROM TO	UNITS PER ASSY
J184	D38999-24WH53SN	.CONNECTOR-SOCKET (V77820) (USED WITH BACKSHELL: G8802-23N (VU0419))		1
PRTE	82-5375	.CONNECTOR-COAXIAL (VK1793)		1
P129M	BAEREF000003904	.CONNECTOR-SOCKET (6026-24-61SYCONDD (VK1793))		1
P129R	BAEREF000003897	.CONNECTOR-SOCKET (6026-22-55SNCONDD (VK1793))		1
P136	D38999-26WJ61PN	.CONNECTOR-PIN (V77820) (USED WITH BACKSHELL: G8802-25N (VU0419))		1
P151	D38999-26WG39PN	.CONNECTOR-PIN (V77820) (USED WITH BACKSHELL: G8802-21N (VU0419))		1
P184	D38999-26WH53PN	.CONNECTOR-PIN (V77820) (USED WITH BACKSHELL: G8802-23N (VU0419))		1
P211P2	225550-2	.CONNECTOR-COAXIAL (VK1793)		1
P527P5	BAEREF000003400	.CONNECTOR-SOCKET (6026-22-55SWCONDB (VK1793)) (USED WITH BACKSHELL: GTR62-22NACS1 (VU0419))		1
RE244	622-6137-001	.RECEIVER- (VK0652)		1
TB123-7	MRTB20E57	.TERMINAL JUNCTION MODULE- (V14283)		1
TB127-17	MRTB20E57	.TERMINAL JUNCTION MODULE- (V14283)		1
TB127-3	MRTB20E57	.TERMINAL JUNCTION MODULE- (V14283)		1
TB127-9	MRTB20E57	.TERMINAL JUNCTION MODULE- (V14283)		1
TB182	HWBUN1736D10B	.TERMINAL BLOCK- (VK0574)		1
		MISSING ITEM NO. NOT APPLICABLE		

– ITEM NOT ILLUSTRATED

IDENT	PART NUMBER	1234567 NOMENCLATURE	EFFECT FROM TO	UNITS PER ASSY
X244P1	653-1285-001	.CONNECTOR- (VK0652) (USED WITH: SCREW 335-0074-000 COAXIAL CONTACT GUIDE 653-1284-001)		1
X244P2	653-1285-001	.CONNECTOR- (VK0652) (USED WITH: SCREW 335-0074-000 COAXIAL CONTACT GUIDE 653-1284-001)		1
		MISSING ITEM NO. NOT APPLICABLE		

– ITEM NOT ILLUSTRATED

CHAPTER 49

AIRBORNE AUXILIARY POWER

CHAPTER 49 - AIRBORNE AUXILIARY POWER

TABLE OF CONTENTS

SUBJECT	CHAPTER SECTION UNIT	FIGURE	EFFECT
APU AND GROUND GENERATOR	49-60-00		
APU AND GROUND GENERATOR	49-60-10	5	001001
			028028
			039039
			041276
AUXILIARY POWER UNIT	49-60-30	6	091091
AUXILIARY POWER UNIT	49-60-30	8	094094
			097097
			102166
			168176
			178179
			181181
			183191
			193196
			198209
			211211
			214218
			220221
			223223
			225225
			229232
			234234
			236236
			238257
			259276
AUXILIARY POWER UNIT	49-60-30	9	167167
			180180
			182182
			192192
			197197
			212212
			219219
			222222
			224224
			226228
AUXILIARY POWER UNIT	49-60-30	11	177177
			233233
			235235
			237237

CH-SECT-UNIT-FIG	PAGE NO.	DATE
*49	1	AUG 31/03
49-60-00	1	MAY 31/02
49-60-10- 5	0	MAY 31/02
49-60-10- 5	0A	MAY 31/02
49-60-10- 5	0B	MAY 31/02
49-60-10- 5	1	MAY 31/02
49-60-10- 5	2	MAY 31/02
*49-60-10- 5	3	AUG 31/03
*49-60-10- 5	4	AUG 31/03
*49-60-10- 5	5	AUG 31/03
*49-60-10- 5	6	AUG 31/03
49-60-30- 6	0	MAY 31/02
49-60-30- 6	0A	MAY 31/02
49-60-30- 6	0B	MAY 31/02
49-60-30- 6	0C	MAY 31/02
49-60-30- 6	1	MAY 31/02
49-60-30- 6	2	MAY 31/02
49-60-30- 6	3	MAY 31/02
49-60-30- 6	4	MAY 31/02
49-60-30- 6	5	MAY 31/02
49-60-30- 6	6	MAY 31/02
49-60-30- 6	7	MAY 31/02
49-60-30- 6	8	MAY 31/02
49-60-30- 8	0	MAY 31/02
49-60-30- 8	0A	MAY 31/02
49-60-30- 8	0B	MAY 31/02
49-60-30- 8	0C	MAY 31/02
49-60-30- 8	1	MAY 31/02
49-60-30- 8	2	MAY 31/02
49-60-30- 8	3	MAY 31/02
49-60-30- 8	4	MAY 31/02
49-60-30- 8	5	MAY 31/02
49-60-30- 8	6	MAY 31/02
49-60-30- 8	7	MAY 31/02
49-60-30- 8	8	MAY 31/02
49-60-30- 8	9	MAY 31/02
49-60-30- 8	10	MAY 31/02
49-60-30- 8	11	MAY 31/02
49-60-30- 8	12	MAY 31/02
49-60-30- 8	13	MAY 31/02
49-60-30- 9	0	MAY 31/02
49-60-30- 9	0A	MAY 31/02
49-60-30- 9	0B	MAY 31/02
49-60-30- 9	0C	MAY 31/02
49-60-30- 9	1	MAY 31/02
49-60-30- 9	2	MAY 31/02
49-60-30- 9	3	MAY 31/02
49-60-30- 9	4	MAY 31/02
49-60-30- 9	5	MAY 31/02
49-60-30- 9	6	MAY 31/02
49-60-30- 9	7	MAY 31/02
49-60-30- 9	8	MAY 31/02
49-60-30-11	0	MAY 31/02
49-60-30-11	0A	NOV 30/02
49-60-30-11	0B	MAY 31/02
49-60-30-11	0C	MAY 31/02
49-60-30-11	1	MAY 31/02
49-60-30-11	2	MAY 31/02
49-60-30-11	3	MAY 31/02
49-60-30-11	4	MAY 31/02
49-60-30-11	5	MAY 31/02
49-60-30-11	6	MAY 31/02
49-60-30-11	7	MAY 31/02
49-60-30-11	8	MAY 31/02

*THE ASTERISK INDICATES PAGES CHANGED OR ADDED BY THE CURRENT REVISION

APU AND GROUND GENERATOR

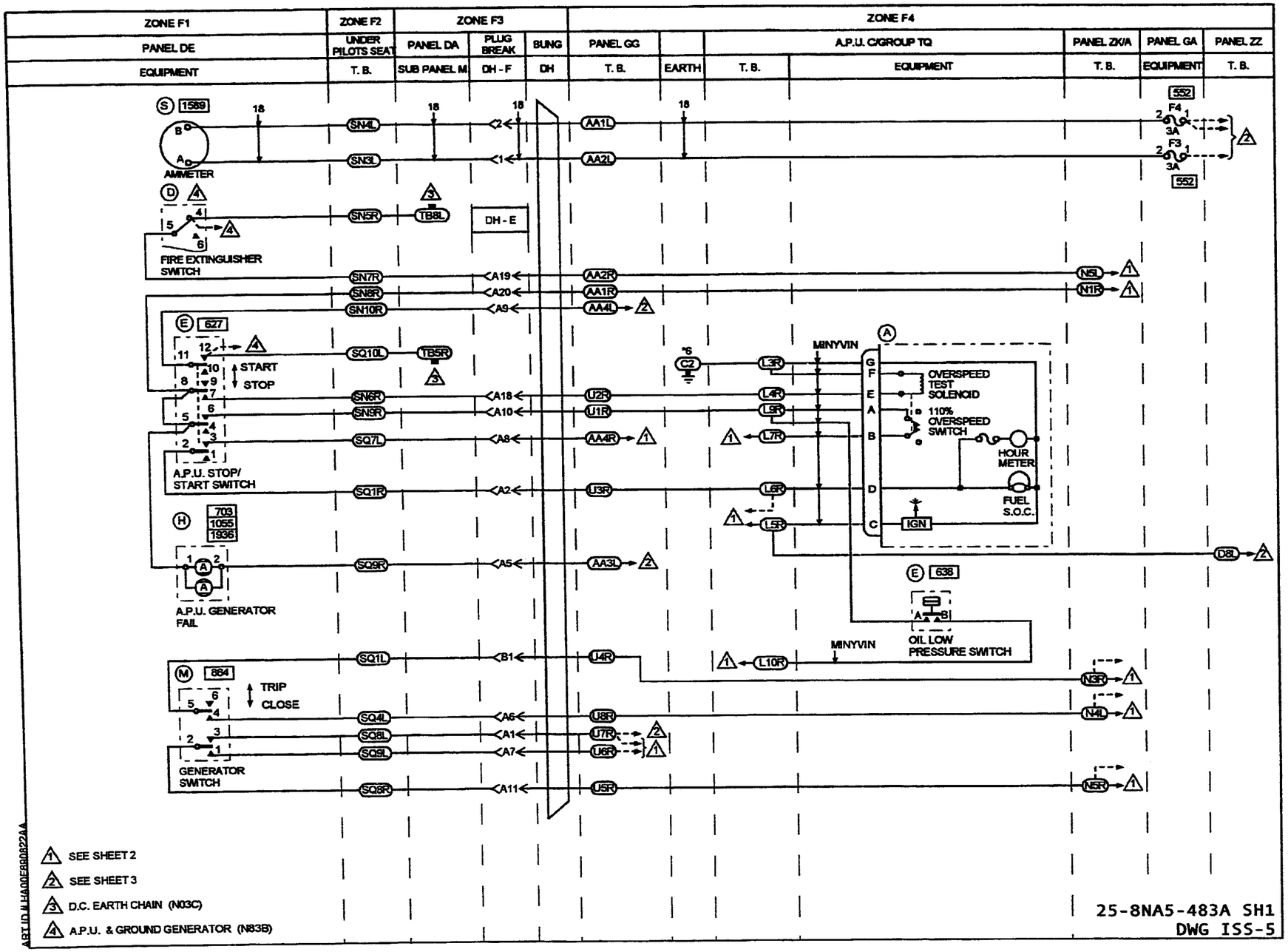
ZONE F1
ZONE F2
ZONE F3
ZONE F4
PANEL DE
UNDER PILOTS SEAT
PANEL DA
PLUG BREAK
BUNG
PANEL GG
A.P.U. C/GROUP TQ
PANEL ZK/A
PANEL GA
PANEL ZZ
EQUIPMENT
T. B.
SUB PANEL M
DH - F
DH
EARTH
AMMETER
FIRE EXTINGUISHER SWITCH
DH - E
START
STOP
A.P.U. STOP/ START SWITCH
A.P.U. GENERATOR FAIL
TRIP
CLOSE
GENERATOR SWITCH
MINYVIN
OVERSPEED TEST SOLENOID
110% OVERSPEED SWITCH
HOUR METER
FUEL S.O.C.
IGN
OIL LOW PRESSURE SWITCH
SEE SHEET 2
SEE SHEET 3
D.C. EARTH CHAIN (N03C)
A.P.U. & GROUND GENERATOR (N83B)
25-8NA5-483A SH1
DWG ISS-5

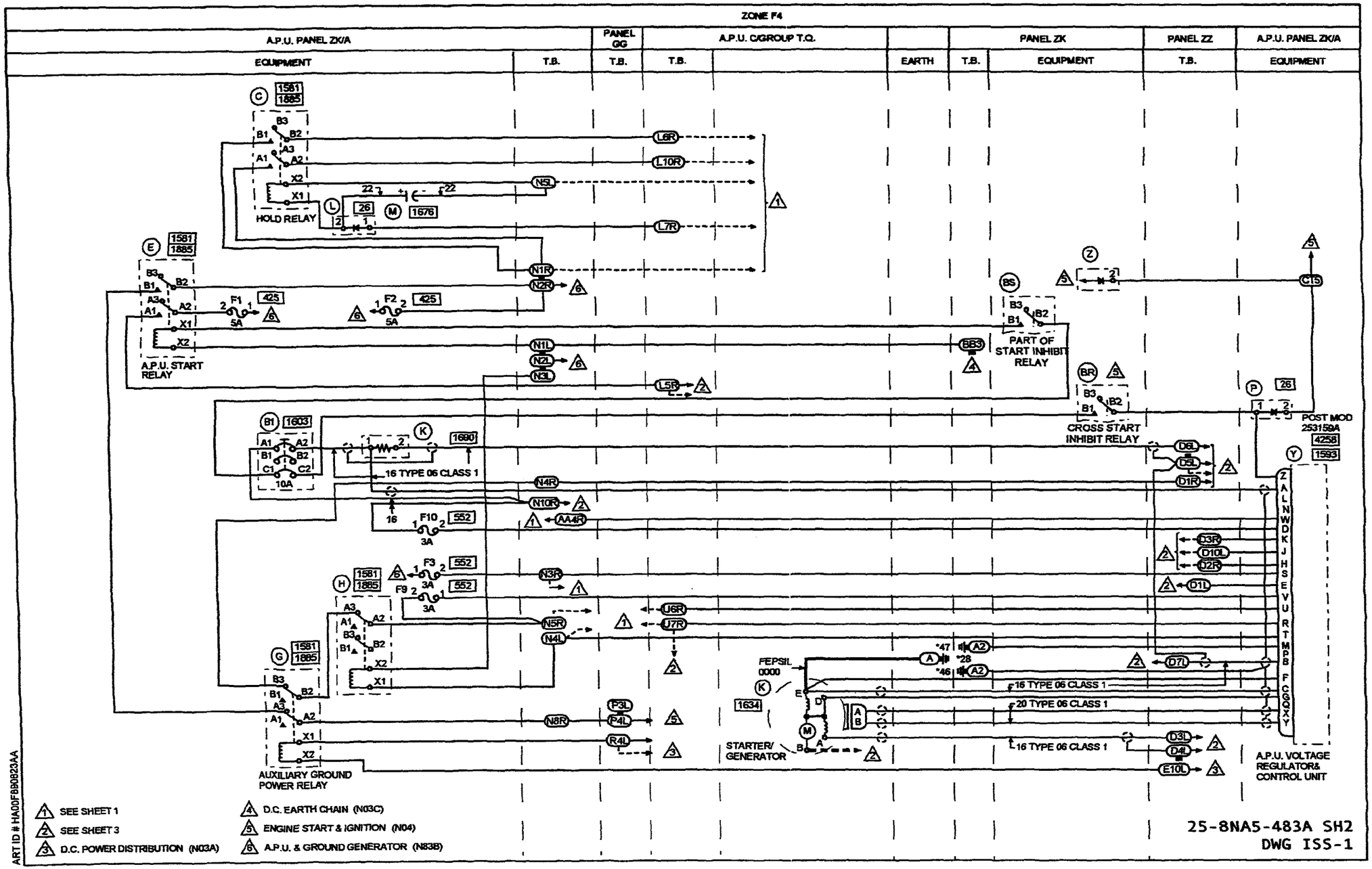
ZONE F4
A.P.U. PANEL ZK/A
PANEL GG
A.P.U. C/GROUP T.Q.
PANEL ZK
PANEL ZZ
A.P.U. PANEL ZK/A
EQUIPMENT
T.B.
EARTH
HOLD RELAY
A.P.U. START RELAY
PART OF START INHIBIT RELAY
CROSS START INHIBIT RELAY
POST MOD 253159A
16 TYPE 06 CLASS 1
20 TYPE 06 CLASS 1
FEPSIL 0000
STARTER/ GENERATOR
AUXILIARY GROUND POWER RELAY
A.P.U. VOLTAGE REGULATOR& CONTROL UNIT
SEE SHEET 1
SEE SHEET 3
D.C. POWER DISTRIBUTION (N03A)
D.C. EARTH CHAIN (N03C)
ENGINE START & IGNITION (N04)
A.P.U. & GROUND GENERATOR (N83B)
25-8NA5-483A SH2
DWG ISS-1
ART ID # HA00FB80823AA

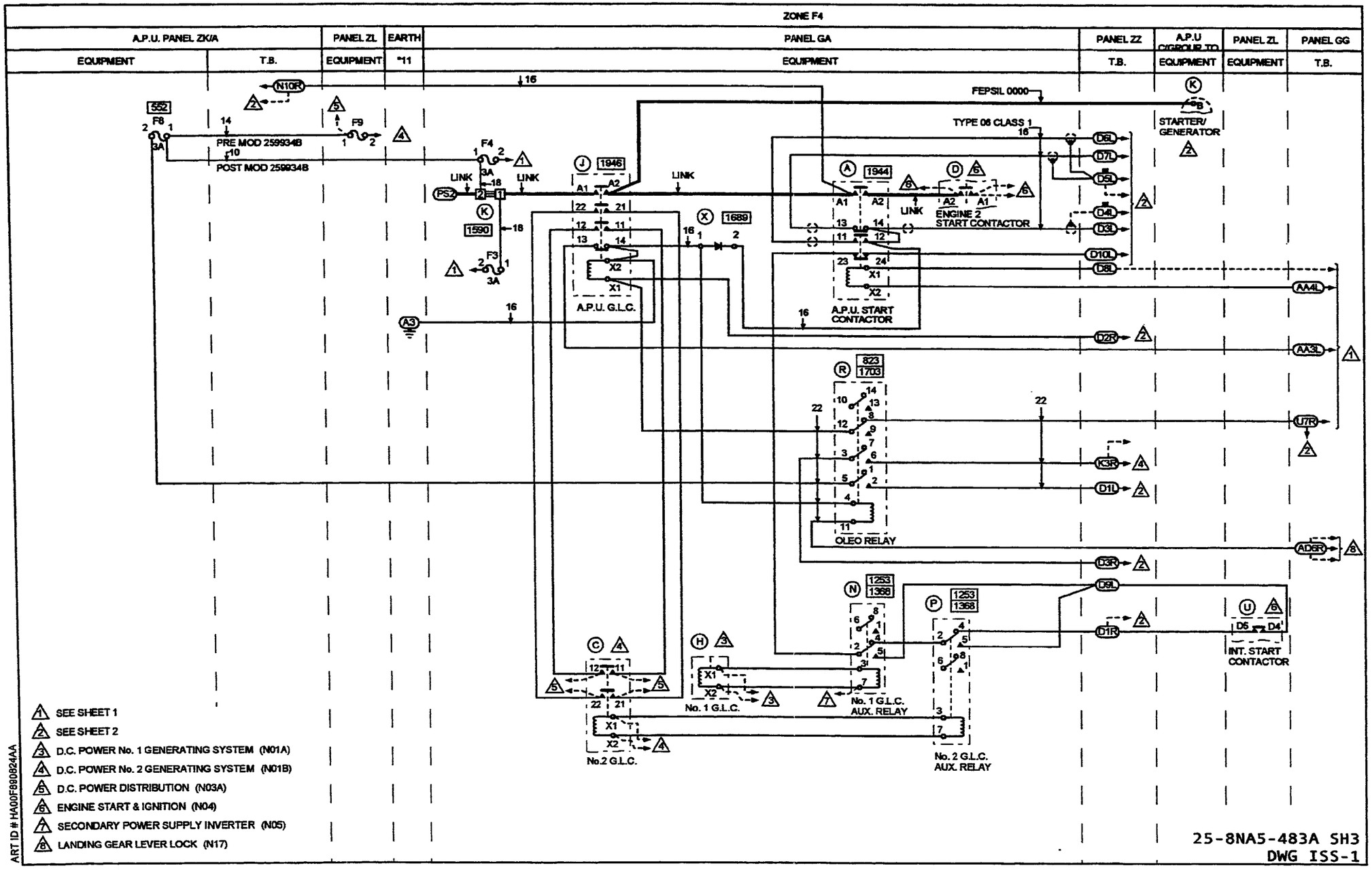
ZONE F4
A.P.U. PANEL ZK/A
PANEL ZL
EARTH
PANEL GA
PANEL ZZ
A.P.U C/GROUP TO
PANEL ZL
PANEL GG
EQUIPMENT
T.B.
EQUIPMENT
*11
EQUIPMENT
T.B.
EQUIPMENT
EQUIPMENT
T.B.
N10R
552
F8
F9
PRE MOD 259934B
POST MOD 259934B
F4
F3
LINK
PS2
1590
1946
1944
1689
A.P.U. G.L.C.
A.P.U. START CONTACTOR
ENGINE 2 START CONTACTOR
FEPSIL 0000
TYPE 06 CLASS 1
STARTER/ GENERATOR
D6L
D7L
D5L
D4L
D3L
D10L
D8L
AA4L
AA3L
D2R
823
1703
U7R
K3R
D1L
OLEO RELAY
ADGR
D3R
D9L
1253
1368
D1R
INT. START CONTACTOR
No. 1 G.L.C.
No. 1 G.L.C. AUX. RELAY
No.2 G.L.C.
No. 2 G.L.C. AUX. RELAY
SEE SHEET 1
SEE SHEET 2
D.C. POWER No. 1 GENERATING SYSTEM (N01A)
D.C. POWER No. 2 GENERATING SYSTEM (N01B)
D.C. POWER DISTRIBUTION (N03A)
ENGINE START & IGNITION (N04)
SECONDARY POWER SUPPLY INVERTER (N05)
LANDING GEAR LEVER LOCK (N17)
ART ID # HA00F890824AA
25-8NA5-483A SH3
DWG ISS-1

IDENT	PART NUMBER	1234567 NOMENCLATURE	EFFECT FROM TO	UNITS PER ASSY
		APU AND GROUND GENERATOR	001001 028028 039039 041276	
	25-8NA5-483A	WIRING DIAGRAM- (MODIFIED BY SB49-37-25A253A) (MOD 253057A)		RF
A-GA	A703FSS	.CONTACTOR-APU START (V74063)		1
A-TQ	968087-2	.METER-HOUR (V99193) (USED WITH CONNECTOR: MS3106R16S1S (V71468) (OPT (VK0316)))		1
AA-GG	HWBUN1146D10B	.TERMINAL BLOCK- (VK0574)		1
AD-GG	HWBUN1146D10B	.TERMINAL BLOCK- (VK0574)		1
BB-ZK	HWBUN1146S10B	.TERMINAL BLOCK- (VK0574)		1
BR-ZK	M300-1264	.RELAY- (VK6265) (USED WITH SOCKET: M12883-41-16 (V81349))		1
BS-ZK	M300-1265	.RELAY- (VK6265) (USED WITH SOCKET: M12883-40-19 (V81349))		1
B1-ZKA	6TC14-10	.CIRCUIT BREAKER-10AMP (V82647)		1
C-GA	703ZS	.CONTACTOR- (V19527)		1
C-ZKA	M300-1264	.RELAY- (VK6265) (USED WITH SOCKET: S0-1049-8309 (VK6265) (OPT M12883-41-16 (V81349)))		1
CT-ZK	HWBUN1146S10B	.TERMINAL BLOCK- (VK0574)		1
D-DE	2TL1-51	.SWITCH-FIRE (V91929) (OPT (VK6596))		1
D-GA	A703FSS	.CONTACTOR- (V74063)		1
		MISSING ITEM NO. NOT APPLICABLE		

– ITEM NOT ILLUSTRATED

IDENT	PART NUMBER	1234567 NOMENCLATURE	EFFECT FROM TO	UNITS PER ASSY
D-ZZ	HWBUN1146D10S	.TERMINAL BLOCK- (VK0574)		1
DH	422254-9	.BUNG- (VK1793)		1
DHE-P	MTC100YH2-009	.SHELL-PLUG (VK1010) (USED WITH WAFERS: TYPE A, MTC100KT2-1103 TYPE B, MTC100KT2-1104)	001001 028028 039039 041254	1
DHE-P	MTC100YH2-009	.SHELL-PLUG (VK1010) (USED WITH INSERTS: PRIMARY MTC100YC1-003 SECONDARY MTC100YC1-004)	255276	1
DHE-R	MTC100YH2-010	.SHELL-RECEPTACLE (VK1010) (USED WITH WAFERS: TYPE A, MTC100KT2-1101 TYPE B, MTC100KT2-1102)	001001 028028 039039 041254	1
DHE-R	MTC100YH2-010	.SHELL-RECEPTACLE (VK1010) (USED WITH INSERTS: PRIMARY MTC100YC1-001 SECONDARY MTC100YC1-002)	255276	1
DHF-P	MTCR161-04S	.CONNECTOR-SOCKET (VK1010)		1
DHF-R	MTCR161-04P	.CONNECTOR-PIN (VK1010)		1
E-DE	4TL1-7	.SWITCH-STOP/START (V91929) (OPT (VK6596))		1
E-TQ	1014-3PGCP16	.SWITCH-OIL LOW PRESSURE (VK1823)		1
E-ZKA	M300-1264	.RELAY- (VK6265) (USED WITH SOCKET: SO-1049-8309 (VK6265) (OPT M12883-41-16 (V81349)))		1
E-ZZ	HWBUN1146D10S	.TERMINAL BLOCK- (VK0574)		1
F1-ZKA	5920-99-0120076	.FUSE-5AMP (VK0657)		1
F10-ZKA	5920-99-0120075	.FUSE-3AMP (VK0657)		1
F2-ZKA	5920-99-0120076	.FUSE-5AMP (VK0657)		1
F3-GA	5920-99-0120075	.FUSE-3AMP (VK0657)		1
		MISSING ITEM NO. NOT APPLICABLE		

– ITEM NOT ILLUSTRATED

	IDENT	PART NUMBER	1234567 NOMENCLATURE	EFFECT FROM TO	UNITS PER ASSY
	F3-ZKA	5920-99-0120075	.FUSE-3AMP (VK0657)		1
	F4-GA	5920-99-0120075	.FUSE-3AMP (VK0657)		1
	F8-ZKA	5920-99-0120075	.FUSE-3AMP (VK0657)		1
	F9-ZKA	5920-99-0120075	.FUSE-3AMP (VK0657)		1
	F9-ZL	5920-99-0120075	.FUSE-3AMP (VK0657)		1
	G-ZKA	M300-1264	.RELAY- (VK6265) (USED WITH SOCKET: SO-1049-8309 (VK6265) (OPT M12883-41-16 (V81349)))		1
	H-DE	C9032-009A	.MODULE ASSY-LIGHT (VK0673) (PRE MOD 253189A) (FOR SPARES PROCURE C9032-001B)		1
	H-DE	C9032-009B	.MODULE ASSY-LIGHT (VK0673) (MOD 253189A) (FOR SPARES PROCURE IN LIEU OF C0932-001A)		1
	H-GA	703ZS	.CONTACTOR- (V19527)		1
	H-ZKA	M300-1264	.RELAY- (VK6265) (USED WITH SOCKET: SO-1049-8309 (VK6265) (OPT M12883-41-16 (V81349)))		1
	J-GA	A703ZS	.CONTACTOR-APU GLC (V19527)		1
	K-GA	25-7NF155A	.SHUNT-AMMETER		1
R R R R R R R R R	K-TQ	23080-005	.MOTOR-STARTER/GENERATOR (UNIT EXCHANGE ITEM) (V31435) (OPT 140-380026-1) (USED WITH CONNECTOR: MS3126F8-3S (V71468) (OPT (VK0316))) (POST SB24-316)		1
			MISSING ITEM NO. NOT APPLICABLE		

– ITEM NOT ILLUSTRATED

	IDENT	PART NUMBER	1234567 NOMENCLATURE	EFFECT FROM TO	UNITS PER ASSY
R	K-TQ	140-380026-1	.MOTOR-STARTER/GENERATOR (OPT 23080-005) (USED WITH CONNECTOR: MS3126F8-3S (V71468) (OPT (VK0316))) (POST SB24-316)		1
	K-ZKA	K3RAH3-4	.RESISTOR ASSY-4 OHMS (VK7269)		1
	K-ZZ	HWBUN1146D10S	.TERMINAL BLOCK- (VK0574)		1
	L-TQ	HWBUN1146D10B	.TERMINAL BLOCK- (VK0574)		1
	L-ZKA	CV7313	.DIODE- (VK0004) (USED WITH HOLDER: WBUN1502 (VK0574))		1
	M-DE	2TL7	.SWITCH-GENERATOR (V91929) (OPT (VK6596))		1
	M-ZKA	5910-99-0124909	.CAPACITOR-100MFD 50V (VK0657)		1
	N-GA	HDS8SF3J03	.RELAY- (VK1793) (USED WITH SOCKET: RSE120074 (V58982))		1
	N-ZKA	HWBUN1146D10B	.TERMINAL BLOCK- (VK0574)		1
	P-GA	HDS8SF3J03	.RELAY- (VK1793) (USED WITH SOCKET: RSE120074 (V58982))		1
	P-GG	HWBUN1146D10B	.TERMINAL BLOCK- (VK0574)		1
	P-ZKA	CV7313	.DIODE- (VK0004) (USED WITH HOLDER: WBUN1502 (VK0574))		1
	R-GA	HDD4SF2H06	.RELAY- (VK1793) (USED WITH BASE: 418538)		1
	R-GG	HWBUN1146D10B	.TERMINAL BLOCK- (VK0574)		1
	S-DE	S546-3-50	.AMMETER- (VU1588)		1
			MISSING ITEM NO. NOT APPLICABLE		

– ITEM NOT ILLUSTRATED

IDENT	PART NUMBER	1234567 NOMENCLATURE	EFFECT FROM TO	UNITS PER ASSY
SN	HWBUN1146D10B	.TERMINAL BLOCK- (VK0574)		1
SQ	HWBUN1146D10B	.TERMINAL BLOCK- (VK0574)		1
TB-DAM	HWBUN1146D10B	.TERMINAL BLOCK- (VK0574)		1
U-GG	HWBUN1146D10B	.TERMINAL BLOCK- (VK0574)		1
U-ZL	A848MAS	.CONTACTOR- (V74063)	001001 039039 041042 044063 065108 110111 113119 121142 144145 147147	1
U-ZL	A848MASMODA	.CONTACTOR- (V74063)	028028 043043 064064 109109 112112 120120 143143 146146 148276	1
X-GA	MR1376	.DIODE- (VK5519) (USED WITH BASE: WBUN1502 (VK0574))		1
Y-ZKA	51509-006C	.CONTROL UNIT-VOLTAGE REGULATOR (UNIT EXCHANGE ITEM) (V31435) (USED WITH CONNECTOR: MS3108R24-28SF80 (V71468) (OPT (VK0316)) (PRE MOD 253159A)		1
Y-ZKA	51539-006H	.CONTROL UNIT-VOLTAGE REGUL AND CONTROL (UNIT EXCHANGE ITEM) (V31435) (USED WITH CONNECTOR: MS3108R24-28SF80 (V71468) (OPT (VK0316)) (MOD 253159A)		1
		MISSING ITEM NO. NOT APPLICABLE		

– ITEM NOT ILLUSTRATED

IDENT	PART NUMBER	1234567 NOMENCLATURE	EFFECT FROM TO	UNITS PER ASSY
Z-ZK	CV7313	.DIODE- (VK0004) (USED WITH HOLDER: WBUN1502 (VK0574))		1
		MISSING ITEM NO. NOT APPLICABLE		

– ITEM NOT ILLUSTRATED

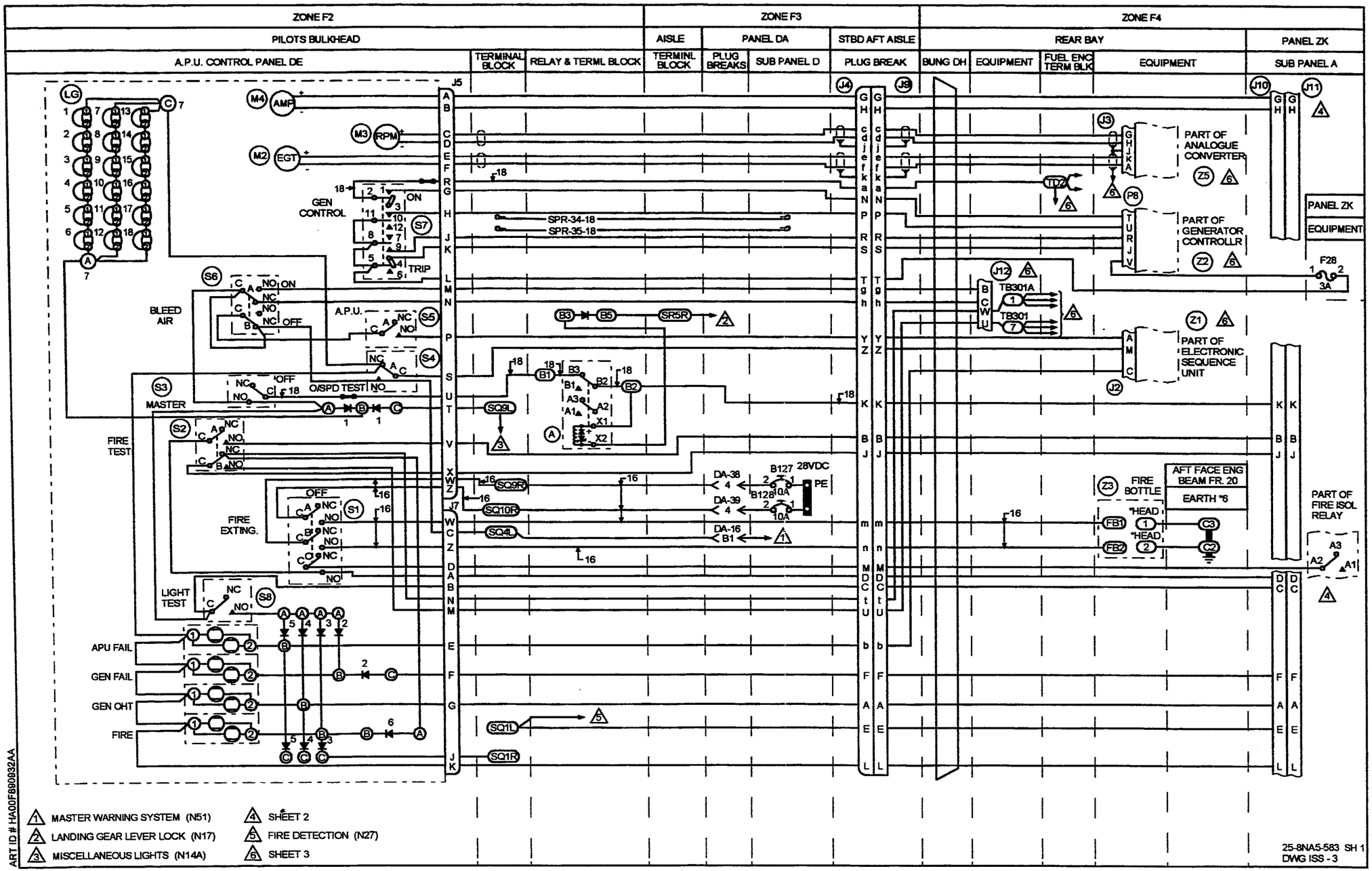
ZONE F2
ZONE F3
ZONE F4
PILOTS BULKHEAD
AISLE
PANEL DA
STBD AFT AISLE
REAR BAY
PANEL ZK
A.P.U. CONTROL PANEL DE
TERMINAL BLOCK
RELAY & TERML BLOCK
TERMINL BLOCK
PLUG BREAKS
SUB PANEL D
PLUG BREAK
BUNG DH
EQUIPMENT
FUEL ENC TERM BLK
EQUIPMENT
SUB PANEL A
PART OF ANALOGUE CONVERTER
PART OF GENERATOR CONTROLLR
PART OF ELECTRONIC SEQUENCE UNIT
PANEL ZK
EQUIPMENT
GEN CONTROL
ON
TRIP
BLEED AIR
A.P.U.
OFF
O/SPD TEST
MASTER
FIRE TEST
FIRE EXTING.
LIGHT TEST
APU FAIL
GEN FAIL
GEN OHT
FIRE
SPR-34-18
SPR-35-18
SR5R
SQ9L
SQ9R
SQ10R
SQ4L
SQ1L
SQ1R
28VDC
PE
AFT FACE ENG BEAM FR. 20
EARTH *6
FIRE BOTTLE
*HEAD
PART OF FIRE ISOL RELAY
TB301A
TB301
F28
3A
1 MASTER WARNING SYSTEM (N51)
2 LANDING GEAR LEVER LOCK (N17)
3 MISCELLANEOUS LIGHTS (N14A)
4 SHEET 2
5 FIRE DETECTION (N27)
6 SHEET 3
25-8NA5-583 SH 1
DWG ISS - 3
ART ID # HA00F890932AA

ZONE F4

ZK PANEL SUB-PANEL A

EQUIPMENT

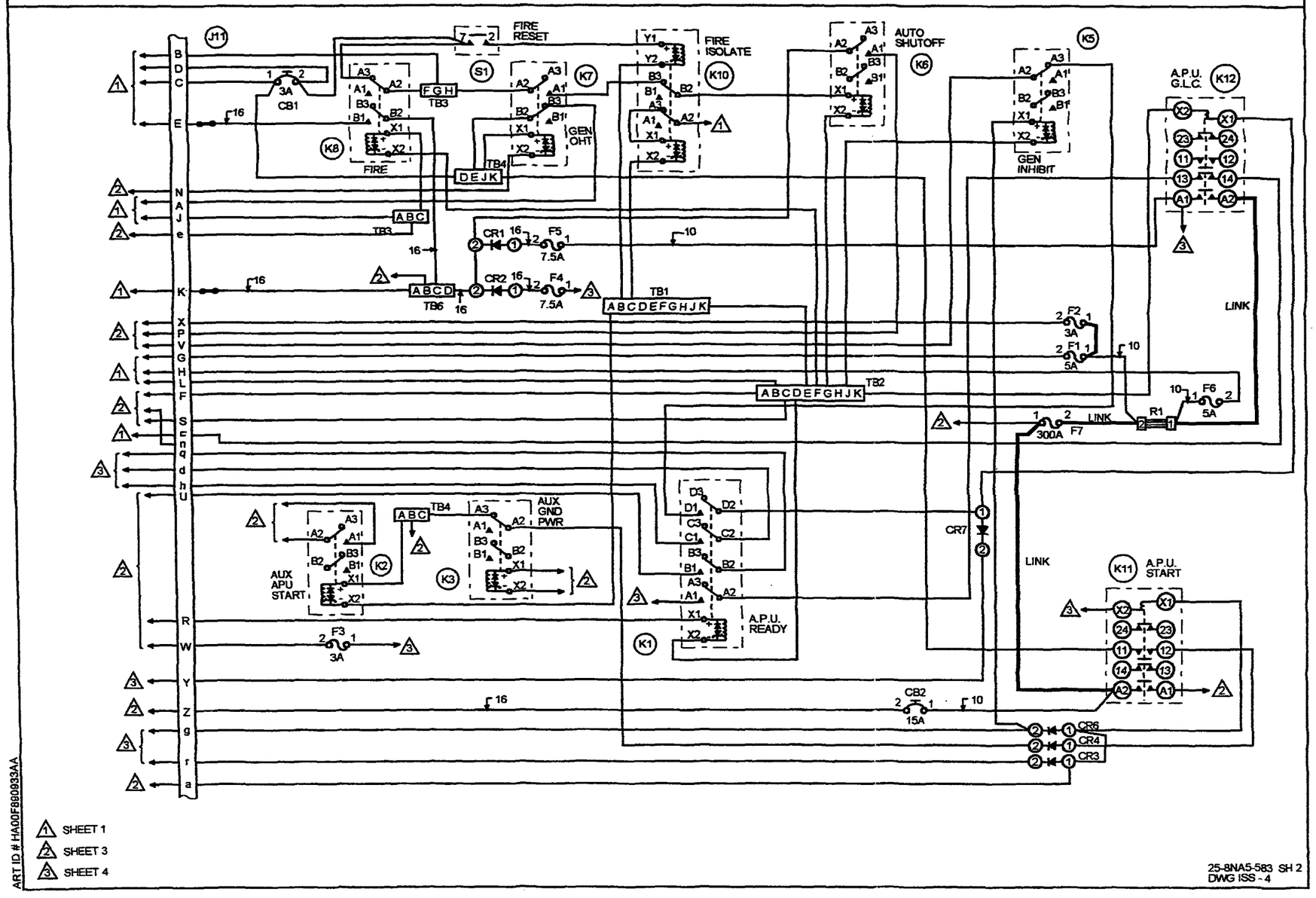

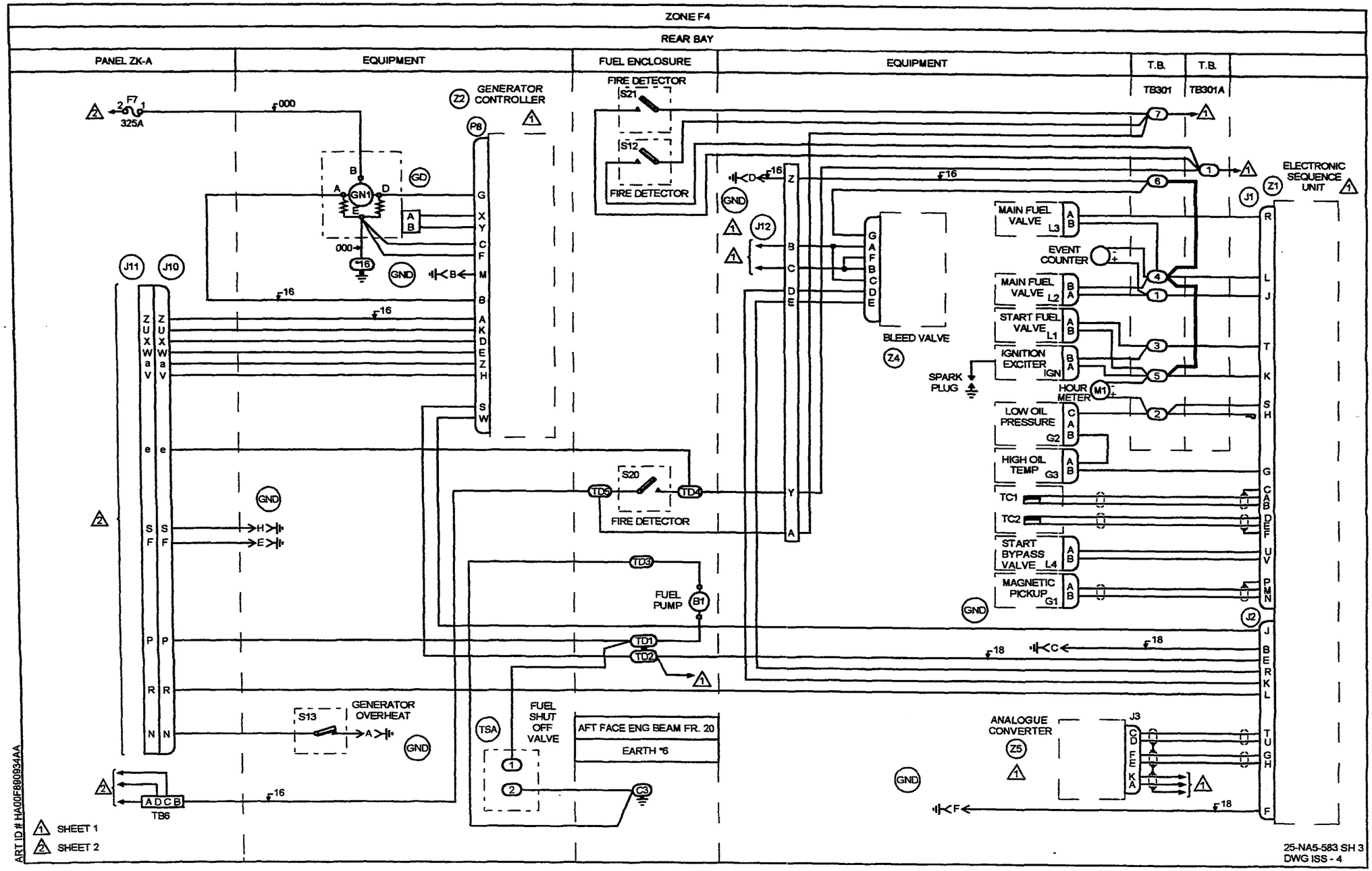
ZONE F4
REAR BAY
PANEL ZK-A
EQUIPMENT
FUEL ENCLOSURE
EQUIPMENT
T.B.
T.B.
TB301
TB301A
F7
325A
GENERATOR CONTROLLER
Z2
P8
GN1
GD
GND
FIRE DETECTOR
S21
S12
S20
TD5
TD4
TD3
TD1
TD2
FUEL PUMP
B1
J11
J10
J12
J1
J2
J3
Z1
ELECTRONIC SEQUENCE UNIT
MAIN FUEL VALVE L3
EVENT COUNTER
MAIN FUEL VALVE L2
START FUEL VALVE L1
IGNITION EXCITER IGN
HOUR METER M1
LOW OIL PRESSURE G2
HIGH OIL TEMP G3
TC1
TC2
START BYPASS VALVE L4
MAGNETIC PICKUP G1
BLEED VALVE
Z4
SPARK PLUG
S13
GENERATOR OVERHEAT
TB6
TSA
FUEL SHUT OFF VALVE
AFT FACE ENG BEAM FR. 20
EARTH #6
C3
ANALOGUE CONVERTER
Z5
SHEET 1
SHEET 2
ART ID # HA00F890934AA
25-NA5-583 SH 3
DWG ISS - 4

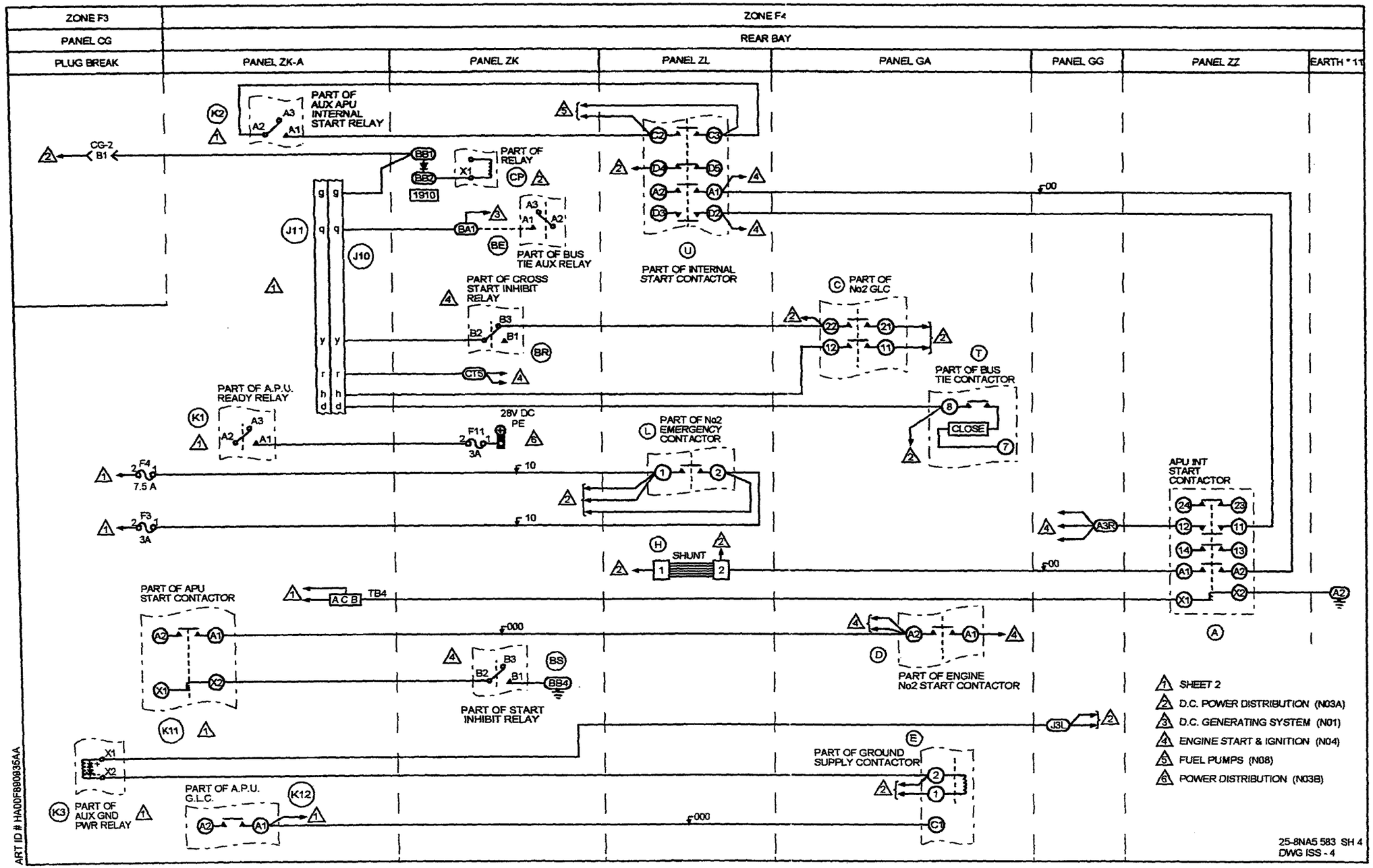
ZONE F3
ZONE F4
PANEL CG
REAR BAY
PLUG BREAK
PANEL ZK-A
PANEL ZK
PANEL ZL
PANEL GA
PANEL GG
PANEL ZZ
EARTH * 11
PART OF AUX APU INTERNAL START RELAY
CG-2 B1
PART OF RELAY
1910
PART OF BUS TIE AUX RELAY
PART OF INTERNAL START CONTACTOR
PART OF CROSS START INHIBIT RELAY
PART OF No2 GLC
PART OF BUS TIE CONTACTOR
CLOSE
PART OF A.P.U. READY RELAY
28V DC PE
PART OF No2 EMERGENCY CONTACTOR
7.5 A
3A
SHUNT
APU INT START CONTACTOR
PART OF APU START CONTACTOR
TB4
PART OF ENGINE No2 START CONTACTOR
PART OF START INHIBIT RELAY
PART OF GROUND SUPPLY CONTACTOR
PART OF AUX GND PWR RELAY
PART OF A.P.U. G.L.C.
SHEET 2
D.C. POWER DISTRIBUTION (N03A)
D.C. GENERATING SYSTEM (N01)
ENGINE START & IGNITION (N04)
FUEL PUMPS (N08)
POWER DISTRIBUTION (N03B)
25-8NA5 583 SH 4
DWG ISS - 4
ART ID # HA00F890835AA

IDENT	PART NUMBER	1234567 NOMENCLATURE	EFFECT FROM TO	UNITS PER ASSY
		AUXILIARY POWER UNIT	091091	
	25-8NA5-583	WIRING DIAGRAM- (MODIFIED BY SB49-37-25A253A) (MODIFIED BY SB26-3002-25F598A) (MOD 259404B)		RF
A	M300-1264	.RELAY- (VK6265) (USED WITH SOCKET: M12883-41-16 (V81349))		1
A-GG	HWBUN1146D10B	.TERMINAL BLOCK- (VK0574)		1
A-ZZ	703FSS	.CONTACTOR- (V74063)		1
B	HWBUN1736S5B	.TERMINAL BLOCK- (VK0574) (USED WITH DIODE: IN4005 (VK5519) OPT BYW54 (VK0004))		1
BA-ZK	HWBUN1146S10B	.TERMINAL BLOCK- (VK0574)		1
BB-ZK	HWBUN1146S10B	.TERMINAL BLOCK- (VK0574) (USED WITH DIODE: IN4005 (VK5519) OPT BYW54 (VK0004))		1
BE-ZK	M300-1264	.RELAY- (VK6265) (USED WITH SOCKET: M12883-41-16 (V81349))		1
BR-ZK	M300-1264	.RELAY- (VK6265) (USED WITH SOCKET: M12883-41-16 (V81349))		1
BS-ZK	M400-1265	.RELAY- (VK6265) (USED WITH SOCKET: M12883-40-19 (V81349))		1
B1	2B6-72	.FUEL PUMP- (V26433) (OPT (V1BU13))		1
		MISSING ITEM NO. NOT APPLICABLE		

– ITEM NOT ILLUSTRATED

IDENT	PART NUMBER	1234567 NOMENCLATURE	EFFECT FROM TO	UNITS PER ASSY
B127-DAD	25-8NF2217-10	.CIRCUIT BREAKER-10AMP (ALTERED FROM 483-96TCK14-10A (VU0091))		1
B128-DAD	25-8NF2217-10	.CIRCUIT BREAKER-10AMP (ALTERED FROM 483-96TCK14-10A (VU0091))		1
C-GA	A703ZS	.CONTACTOR- (V74063)		1
CB1-ZKA	483TCG11J5-3A	.CIRCUIT BREAKER-3AMP (VU0091)		1
CB2-ZKA	25-8NF2217-15	.CIRCUIT BREAKER-15AMP (ALTERED FROM 483-96TCK14-15A (VU0091))		1
CG2-P	MTC100YH2-009	.SHELL-PLUG (VK1010) (USED WITH WAFERS: TYPE A, MTC100KT2-1101 TYPE B, MTC100KT2-1102)		1
CG2-R	MTC100YH2-010	.SHELL-RECEPTACLE (VK1010) (USED WITH WAFERS: TYPE A, MTC100KT2-1103 TYPE B, MTC100KT2-1104)		1
CP-ZK	M300-1264	.RELAY- (VK6265) (USED WITH SOCKET: M12883-41-16 (V81349))		1
CR1-ZKA	BYX42-600	.DIODE- (VK0004)		1
CR2-ZKA	BYX42-600	.DIODE- (VK0004)		1
CR3-ZKA	BYX42-600	.DIODE- (VK0004)		1
CR4-ZKA	BYX42-600	.DIODE- (VK0004)		1
CR6-ZKA	BYX42-600	.DIODE- (VK0004)		1
CR7-ZKA	BYX42-600	.DIODE- (VK0004)		1
CT-ZK	HWBUN1146S10B	.TERMINAL BLOCK- (VK0574)		1
D-GA	A703FSS	.CONTACTOR- (VK4358)		1
		MISSING ITEM NO. NOT APPLICABLE		

– ITEM NOT ILLUSTRATED

IDENT	PART NUMBER	1234567 NOMENCLATURE	EFFECT FROM TO	UNITS PER ASSY
DA16-P	MTC100YH1-003	.SHELL-PLUG (VK1010) (USED WITH WAFERS: TYPE A, MTC100KT1-1101 TYPE B, MTC100KT1-1102)		1
DA16-R	MTC100YH1-004	.SHELL-RECEPTACLE (VK1010) (USED WITH WAFERS: TYPE A, MTC100KT1-1103 TYPE B, MTC100KT1-1104)		1
DA38-P	MTCR161-04P	.CONNECTOR-PIN (VK1010)		1
DA38-R	MTCR101-04S	.CONNECTOR-SOCKET (VK1010)		1
DA39-P	MTCR161-04P	.CONNECTOR-PIN (VK1010)		1
DA39-R	MTCR101-04S	.CONNECTOR-SOCKET (VK1010)		1
DH	422254-9	.BUNG- (VK1793)		1
E-GA	LDG150Y4	.CONTACTOR- (VK4358)		1
F1-ZKA	5920-99-0120076	.FUSE-5AMP (VK0657)		1
F11-ZK	5920-99-0120075	.FUSE-3AMP (VK0657)		1
F2-ZKA	5920-99-0120075	.FUSE-3AMP (VK0657)		1
F28-ZKA	5920-99-0120075	.FUSE-3AMP (VK0657)		1
F3-ZKA	5920-99-0120075	.FUSE-3AMP (VK0657)		1
F4-ZKA	5920-99-0120077	.FUSE-7.5AMP (VK0657)		1
F5-ZKA	5920-99-0120077	.FUSE-7.5AMP (VK0657)		1
F6-ZKA	5920-99-0120076	.FUSE-5AMP (VK0657)		1
F7-ZKA	L1330A325	.FUSE-325AMP (VU0154)		1
GD	23080-006	.GENERATOR ASSY- (V19527) (POST SB24-316)		1
G1-AB	MS3456L10SL4S	.CONNECTOR-MAGNETIC PICKUP (V96906)		1
G2-CAB	MS3450L10SL3S	.CONNECTOR-LOW PRESSURE GAUGE (V96906)		1
		MISSING ITEM NO. NOT APPLICABLE		

– ITEM NOT ILLUSTRATED

IDENT	PART NUMBER	1234567 NOMENCLATURE	EFFECT FROM TO	UNITS PER ASSY
G3-AB	MS3108810SL4S	.CONNECTOR-HIGH OIL TEMPERATURE GAUGE (V96906)		1
H-ZL	1628	.SHUNT- (VK4383)		1
IGN	MS3456L10SL3S	.CONNECTOR-IGNITION EXCITER (V96906)		1
IGN-BA	MS3455L10SL3S	.CONNECTOR-IGNITION EXCITER (V96906)		1
J-GG	HWBUN1146D10B	.TERMINAL BLOCK- (VK0574)		1
J1	MS3476L16-26P	.CONNECTOR-RECEPTACLE (V96906)		1
J10-ZKA	MS3126E22-41P	.CONNECTOR-PLUG (V96906)		1
J11-ZKA	MS3120E22-41S	.CONNECTOR- (V71468) (OPT (VK0316))		1
J12-P	MS3100E10SL4P	.CONNECTOR- (V96906)		1
J12-R	MS3100E10SL4S	.CONNECTOR- (V96906)		1
J2	MS3476L14-19S	.CONNECTOR- (V96906) (USED WITH BACKSHELL: MS1417-14N)		1
J3	MS34676-12-10S	.CONNECTOR- (V96906) (USED WITH BACKSHELL: MS1417-12N)		1
J4	MS3120F22-41P	.CONNECTOR- (V96906)		1
J5-DE	RR06E16-99SN059	.CONNECTOR-APU CABLE LOOM (VK1793)		1
J7-DE	RR06E16-99SX059	.CONNECTOR-APU CABLE LOOM (VK1793)		1
J9	MS3126E22-41S	.CONNECTOR- (V96906)		1
K1-ZKA	M400-1265	.RELAY- (VK6265) (USED WITH SOCKET: M12883-40-19 (V81349))		1
K10-ZKA	M302D4L	.RELAY- (VK6265) (USED WITH BASE: S302D1B0)		1
K11-ZKA	A703FSS	.CONTACTOR- (V74063)		1
		MISSING ITEM NO. NOT APPLICABLE		

- ITEM NOT ILLUSTRATED

IDENT	PART NUMBER	1234567 NOMENCLATURE	EFFECT FROM TO	UNITS PER ASSY
K12-ZKA	A703GS	.CONTACTOR- (V74063) (POST SB49-3254)		1
K2-ZKA	M300-1264	.RELAY- (VK6265) (USED WITH SOCKET: M12883-41-16 (V81349))		1
K3-ZKA	M300-1264	.RELAY- (VK6265) (USED WITH SOCKET: M12883-41-16 (V81349))		1
K5-ZKA	M300-1264	.RELAY- (VK6265) (USED WITH SOCKET: M12883-41-16 (V81349))		1
K6-ZKA	M300-1264	.RELAY- (VK6265) (USED WITH SOCKET: M12883-41-16 (V81349))		1
K7-ZKA	M300-1264	.RELAY- (VK6265) (USED WITH SOCKET: M12883-41-16 (V81349))		1
K8-ZKA	M300-1264	.RELAY- (VK6265) (USED WITH SOCKET: M12883-41-16 (V81349))		1
L-ZL	9124-9290	.CONTACTOR- (VK6265)		1
L1-AB	MS3456L10SL4S	.CONNECTOR-START FUEL VALVE (V96906)		1
L2-BA	MS3456L10SL3S	.CONNECTOR-MAIN FUEL VALVE (V96906)		1
L3-AB	MS3456L10SL4S	.CONNECTOR-MAIN FUEL VALVE (V96906)		1
L4-AB	MS3456L10SL4S	.CONNECTOR-START BYPASS VALVE (V96906)		1
M1	169096-1	.HOUR METER- (V13555)		1
M2-DE	BE2315ABCD	.EGT METER- (V1BU13)		1
M3-DE	BE2321ABCD	.RPM INDICATOR- (V1BU13)		1
		MISSING ITEM NO. NOT APPLICABLE		

– ITEM NOT ILLUSTRATED

IDENT	PART NUMBER	1234567 NOMENCLATURE	EFFECT FROM TO	UNITS PER ASSY
M4-DE	BE185129ECXX	.AMMETER- (V1BU13)		1
P8	MS3106E24-28S	.CONNECTOR-GENERATOR CONTROLLER (V96906)		1
R1-ZKA	2909-2015	.SHUNT- (VK0100)		1
SQ	HWBUN1146D10B	.TERMINAL BLOCK- (VK0574)		1
SR	HWBUN1146D10B	.TERMINAL BLOCK- (VK0574)		1
S1-DE	23AT74T2	.SWITCH- (V91929) (OPT (VK6596))		1
S1-ZKA	WC1503	.SWITCH- (VK0653)		1
S12	17343-62-500	.SWITCH-FIRE DETECTOR (V15801)		1
S13	67100-1-32-350	.SWITCH-GENERATOR OVERHEAT (V15801)		1
S2-DE	2PB732T2	.SWITCH- (V91929) (OPT (VK6596))		1
S20	17343-62-500	.SWITCH-FIRE DETECTOR (V15801)		1
S21	17343-62-500	.SWITCH-FIRE DETECTOR (V15801)		1
S3-DE	23AT73T2	.SWITCH- (V91929) (OPT (VK6596))		1
S4-DE	2PB732T2	.SWITCH- (V91929) (OPT (VK6596))		1
S5-DE	2PB717T2	.SWITCH- (V91929) (OPT (VK6506))		1
S6-DE	23AT73T2	.SWITCH- (V91929) (OPT (VK6596))		1
S7-DE	4TL1-70	.SWITCH- (VK0653)		1
S8-DE	2PB732T2	.SWITCH- (V91929) (OPT (VK6596))		1
T-GA	LDA150A8	.CONTACTOR- (VK4358)		1
TB1-ZKA	MRTB20E04-111	.TERMINAL JUNCTION MODULE- (V14283)		1
TB2-ZKA	MRTB20E04-111	.TERMINAL JUNCTION MODULE- (V14283)		1
		MISSING ITEM NO. NOT APPLICABLE		

– ITEM NOT ILLUSTRATED

IDENT	PART NUMBER	1234567 NOMENCLATURE	EFFECT FROM TO	UNITS PER ASSY
TB3-ZKA	MRTB20E57-111	.TERMINAL JUNCTION MODULE- (V14283)		1
TB301	HWBUN1146S10B	.TERMINAL BLOCK- (VK0574)		1
TB301-1-4	104026-1	.START EVENT COUNTER- (V55820)		1
TB301A	HWB1146S3B	.TERMINAL BLOCK- (VK0574)		1
TB4-ZKA	MRTB20E57-111	.TERMINAL JUNCTION MODULE- (V14283)		1
TB6-ZKA	MRTB16E03-111	.TERMINAL JUNCTION MODULE- (V14283)		1
TC1	160021-3	.THERMOCOUPLE- (V55820)		1
TC2	160021-3	.THERMOCOUPLE- (V55820)		1
TD	MS27212-1	.TERMINAL BLOCK- (V96906)		1
TSA	FGBA24	.FUEL SHUT OFF VALVE- (VK0686)		1
U-ZL	A84MAS	.CONTACTOR- (V74063)		1
Z1	161043-700	.SEQUENCE UNIT- (UNIT EXCHANGE ITEM) (V55820) (PRE MOD 259890A) (FOR SPARES PROCURE 161043-701)		1
Z1	161043-701	.SEQUENCE UNIT- (UNIT EXCHANGE ITEM) (V55820) (PRE MOD 259890A) (FOR SPARES PROCURE IN LIEU OF 161043-700)		1
Z2	51509-006C	.CONTROL UNIT- (UNIT EXCHANGE ITEM) (V09455) (PRE MOD 253159A) (FOR SPARES PROCURE 51539-006H)		1
Z2	51539-006H	.CONTROL UNIT- (UNIT EXCHANGE ITEM) (V09455) (PRE MOD 253159A) (FOR SPARES PROCURE IN LIEU OF 51509-006C)		1
Z3	30402104	.FIRE BOTTLE- (UNIT EXCHANGE ITEM) (V05167)		1
		MISSING ITEM NO. NOT APPLICABLE		

– ITEM NOT ILLUSTRATED

IDENT	PART NUMBER	1234567 NOMENCLATURE	EFFECT FROM TO	UNITS PER ASSY
Z4	160290-100	.BLEED VALVE- (V55820)		1
Z5	160240-400	.ANALOG CONVERTER- (VK7391)		1
1-AB-DE	BYW54	.DIODE- (VK0004)		1
1-BB-ZK	25-7NF1815-5A	.DIODE ASSY-		1
1-BC-DE	BYW54	.DIODE- (VK0004)		1
2-AB-DE	BYW54	.DIODE- (VK0004)		1
2-BC-DE	BYW54	.DIODE- (VK0004)		1
3-AB-DE	BYW54	.DIODE- (VK0004)		1
3-BC-DE	BYW54	.DIODE- (VK0004)		1
4-AB-DE	BYW54	.DIODE- (VK0004)		1
4-BC-DE	BYW54	.DIODE- (VK0004)		1
5-AB-DE	BYW54	.DIODE- (VK0004)		1
5-BC-DE	BYW54	.DIODE- (VK0004)		1
6-AB-DE	BYW54	.DIODE- (VK0004)		1
		MISSING ITEM NO. NOT APPLICABLE		

– ITEM NOT ILLUSTRATED

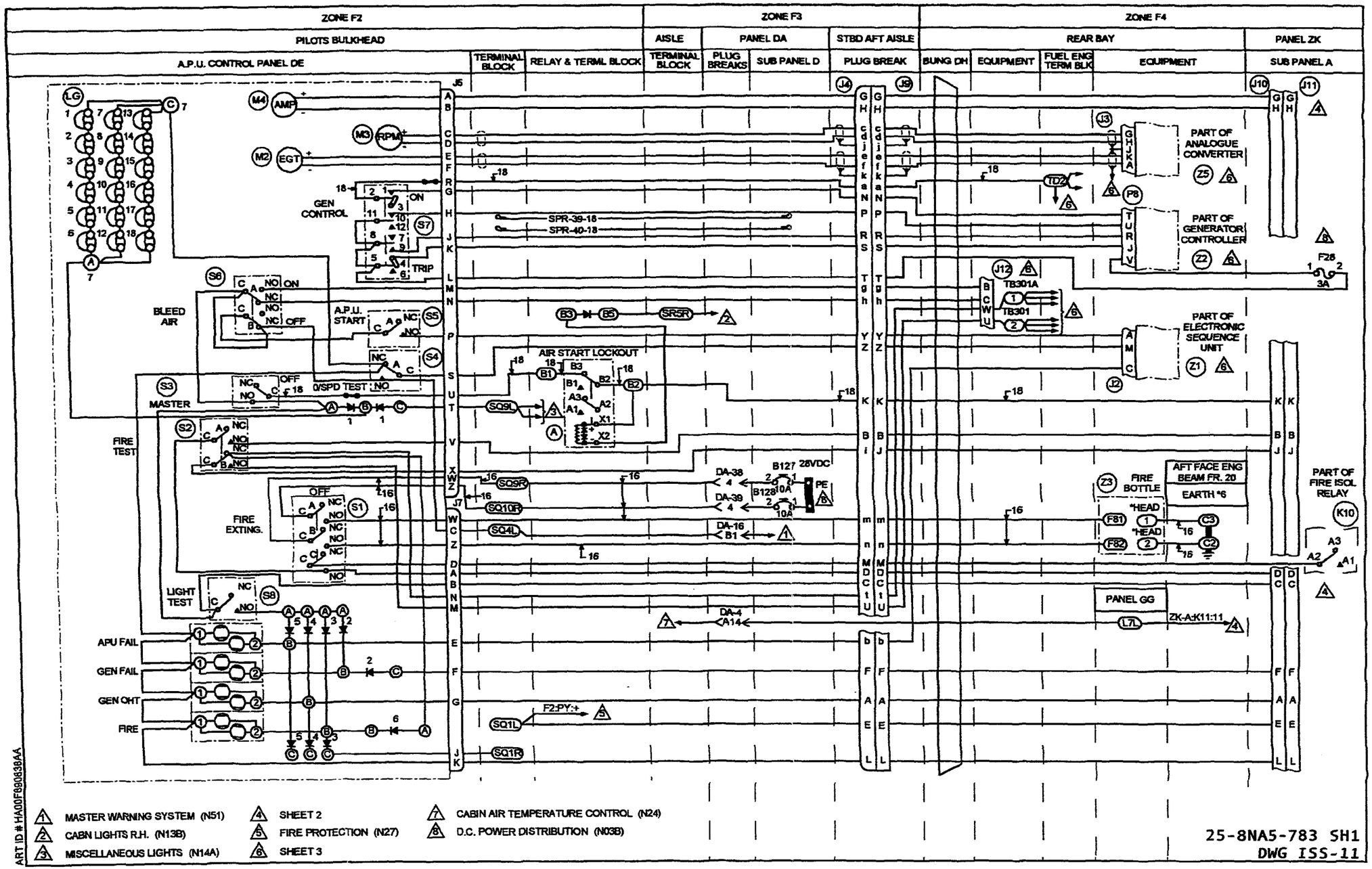
ZONE F2
ZONE F3
ZONE F4
PILOTS BULKHEAD
AISLE
PANEL DA
STBD AFT AISLE
REAR BAY
PANEL ZK
A.P.U. CONTROL PANEL DE
TERMINAL BLOCK
RELAY & TERML BLOCK
TERMINAL BLOCK
PLUG BREAKS
SUB PANEL D
PLUG BREAK
BUNG DH
EQUIPMENT
FUEL ENG TERM BLK
EQUIPMENT
SUB PANEL A
GEN CONTROL
ON
TRIP
BLEED AIR
ON
OFF
A.P.U. START
MASTER
OFF
O/SPD TEST
FIRE TEST
OFF
FIRE EXTING.
LIGHT TEST
APU FAIL
GEN FAIL
GEN OHT
FIRE
SPR-39-18
SPR-40-18
SR5R
AIR START LOCKOUT
SQ9L
SQ9R
SQ10R
SQ4L
SQ1L
SQ1R
F2-PY:+
B127 28VDC
B128
PE
DA-38
DA-39
DA-16 B1
DA-4 A14
PART OF ANALOGUE CONVERTER
PART OF GENERATOR CONTROLLER
PART OF ELECTRONIC SEQUENCE UNIT
TB301A
TB301
F28
3A
FIRE BOTTLE
AFT FACE ENG BEAM FR. 20
EARTH *6
*HEAD
PANEL GG
ZK-A:K11:11
PART OF FIRE ISOL RELAY
K10
1 MASTER WARNING SYSTEM (N51)
2 CABN LIGHTS R.H. (N13B)
3 MISCELLANEOUS LIGHTS (N14A)
4 SHEET 2
5 FIRE PROTECTION (N27)
6 SHEET 3
7 CABIN AIR TEMPERATURE CONTROL (N24)
8 D.C. POWER DISTRIBUTION (N03B)
25-8NA5-783 SH1
DWG ISS-11
ART ID # HA00F890838AA

ZONE F4

PANEL ZK SUB PANEL A

EQUIPMENT

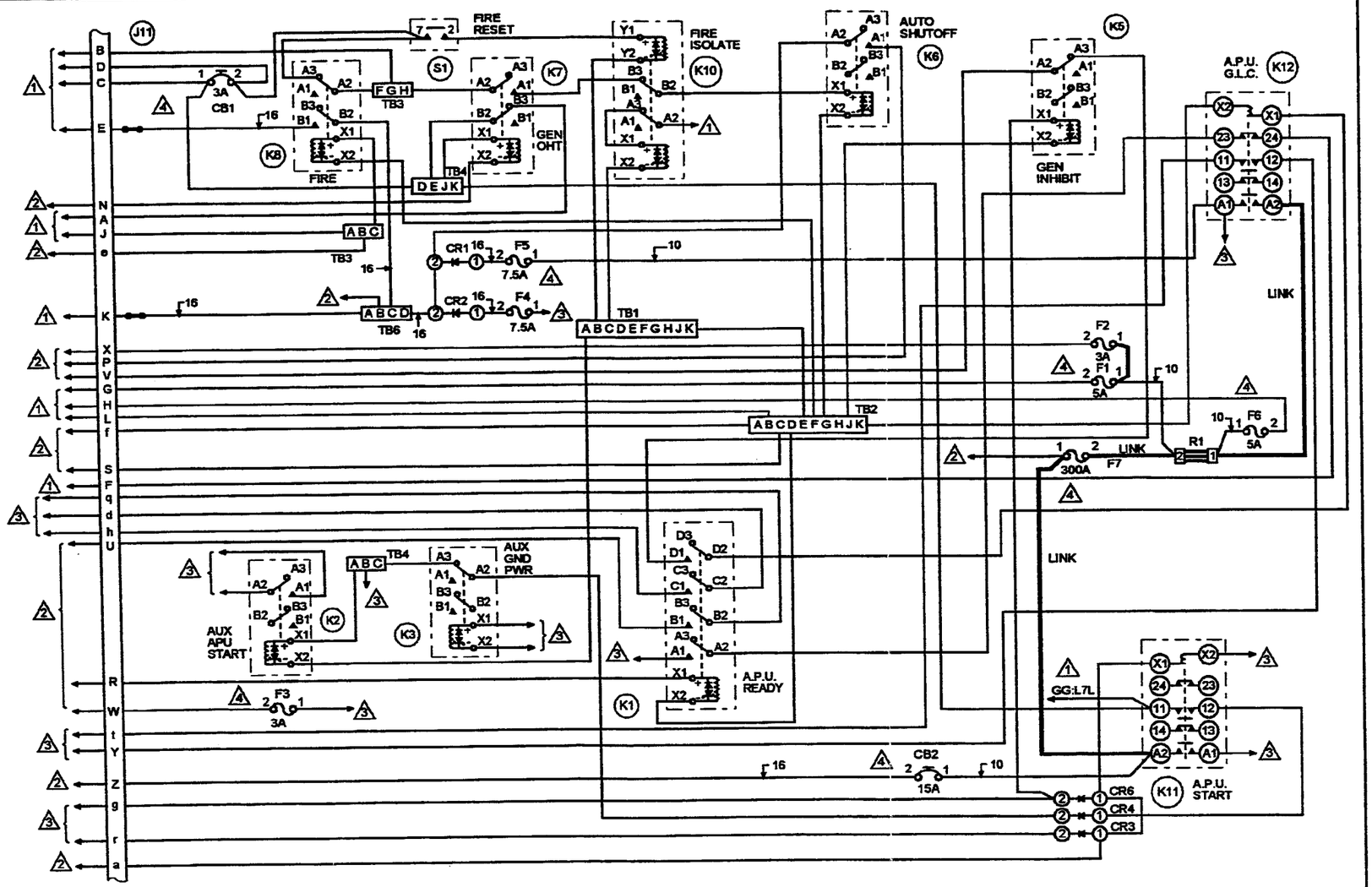

1 SEE SHEET 1
2 SEE SHEET 3
3 SEE SHEET 4
4 D.C. POWER DISTRIBUTION (N03B)

25-8NA5-783 SH2
DWG ISS-11

ART ID # HA00F890839AA

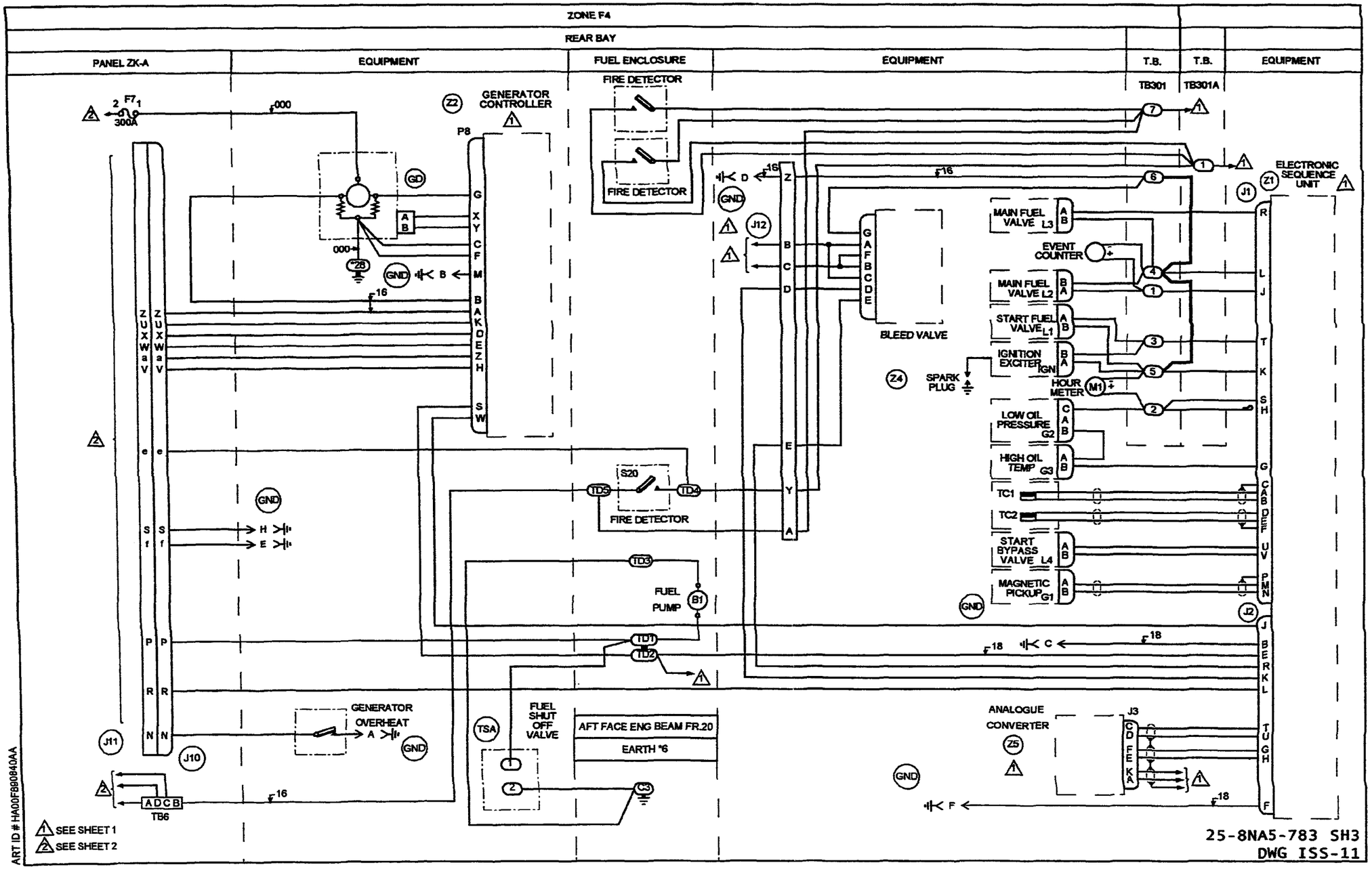
ZONE F4
REAR BAY
PANEL ZK-A
EQUIPMENT
FUEL ENCLOSURE
EQUIPMENT
T.B.
T.B.
EQUIPMENT
TB301
TB301A
GENERATOR CONTROLLER
P8
FIRE DETECTOR
FIRE DETECTOR
ELECTRONIC SEQUENCE UNIT
MAIN FUEL VALVE L3
EVENT COUNTER
MAIN FUEL VALVE L2
START FUEL VALVE L1
IGNITION EXCITER IGN
HOUR METER
LOW OIL PRESSURE G2
HIGH OIL TEMP G3
TC1
TC2
START BYPASS VALVE L4
MAGNETIC PICKUP G1
BLEED VALVE
SPARK PLUG
S20
FIRE DETECTOR
FUEL PUMP
GENERATOR OVERHEAT
FUEL SHUT OFF VALVE
AFT FACE ENG BEAM FR.20
EARTH *6
ANALOGUE CONVERTER
TB6
SEE SHEET 1
SEE SHEET 2
ART ID # HA00F890840AA
25-8NA5-783 SH3
DWG ISS-11

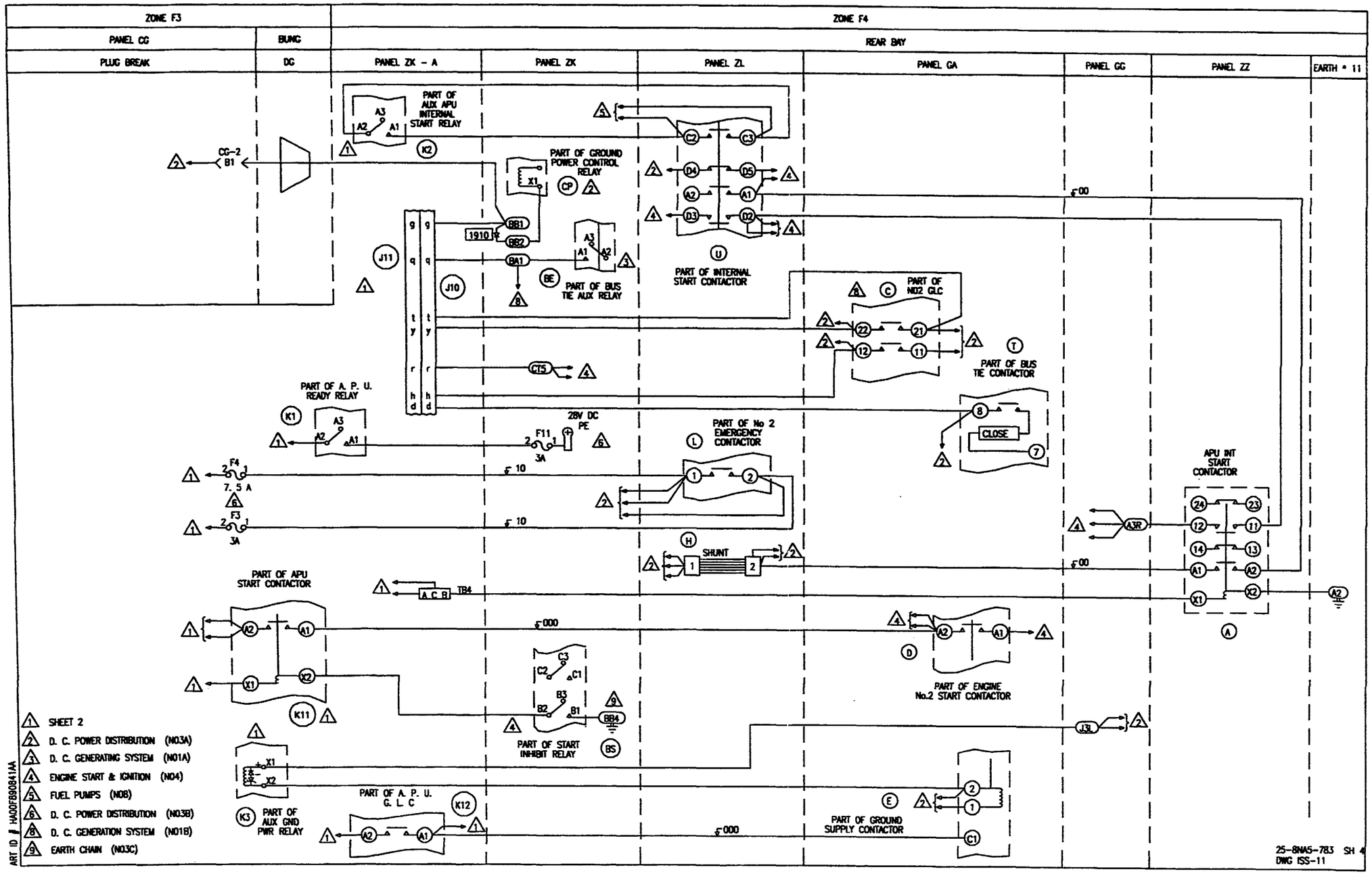
ZONE F3
ZONE F4
PANEL CG
BUNC
REAR BAY
PLUG BREAK
DG
PANEL ZK - A
PANEL ZK
PANEL ZL
PANEL GA
PANEL GG
PANEL ZZ
EARTH * 11
PART OF AUX APU INTERNAL START RELAY
PART OF GROUND POWER CONTROL RELAY
PART OF INTERNAL START CONTACTOR
PART OF BUS TIE AUX RELAY
PART OF NO2 GLC
PART OF BUS TIE CONTACTOR
PART OF A. P. U. READY RELAY
28V DC PE
PART OF No 2 EMERGENCY CONTACTOR
CLOSE
APU INT START CONTACTOR
SHUNT
PART OF APU START CONTACTOR
PART OF ENGINE No.2 START CONTACTOR
PART OF START INHIBIT RELAY
PART OF A. P. U. G. L. C
PART OF AUX GND PWR RELAY
PART OF GROUND SUPPLY CONTACTOR
1 SHEET 2
2 D. C. POWER DISTRIBUTION (N03A)
3 D. C. GENERATING SYSTEM (N01A)
4 ENGINE START & IGNITION (N04)
5 FUEL PUMPS (N08)
6 D. C. POWER DISTRIBUTION (N03B)
8 D. C. GENERATION SYSTEM (N01B)
9 EARTH CHAIN (N03C)
ART ID # HA00F890841AA
25-8NA5-783 SH 4
DWG ISS-11

IDENT	PART NUMBER	1234567 NOMENCLATURE	EFFECT FROM TO	UNITS PER ASSY
		AUXILIARY POWER UNIT	094094 097097 102166 168176 178179 181181 183191 193196 198209 211211 214218 220221 223223 225225 229232 234234 236236 238257 259276	
	25-8NA5-783	WIRING DIAGRAM- (MODIFIED BY SB49-37-25A253A) (MODIFIED BY SB26-3002-25F598A) (MOD 253201B) (MOD 259591A)		RF
A	M300-1264	.RELAY- (VK6265) (USED WITH SOCKET: M12883-41-16 (V81349))		1
A-GG	HWBUN1146D10B	.TERMINAL BLOCK- (VK0574)		1
A-ZZ	703FSS	.CONTACTOR- (V74063)		1
B	HWBUN1736S5B	.TERMINAL BLOCK- (VK0574) (USED WITH DIODE: IN4005 (VK5519) OPT BYW54 (VK0004))		1
BA-ZK	HWBUN1146S10B	.TERMINAL BLOCK- (VK0574)		1
		MISSING ITEM NO. NOT APPLICABLE		

– ITEM NOT ILLUSTRATED

IDENT	PART NUMBER	1234567 NOMENCLATURE	EFFECT FROM TO	UNITS PER ASSY
BB-ZK	HWBUN1146S10B	.TERMINAL BLOCK- (VK0574) (USED WITH DIODE: IN4005 (VK5519) OPT BYW54 (VK0004))		1
BE-ZK	M300-1264	.RELAY- (VK6265) (USED WITH SOCKET: M12883-41-16 (V81349))		1
BS-ZK	M400-1265	.RELAY- (VK6265) (USED WITH SOCKET: M12883-40-19 (V81349))		1
B1	2B6-72	.FUEL PUMP- (V26433) (OPT (V1BU13))		1
B127-DAD	25-8NF2217-10	.CIRCUIT BREAKER-10AMP (ALTERED FROM 483-96TCK14-10A (VU0091))		1
B128-DAD	25-8NF2217-10	.CIRCUIT BREAKER-10AMP (ALTERED FROM 483-96TCK14-10A (VU0091))		1
C-GA	A703ZS	.CONTACTOR- (V74063)		1
CB1-ZKA	483TCG11J5-3A	.CIRCUIT BREAKER-3AMP (VU0091)		1
CB2-ZKA	25-8NF2217-15	.CIRCUIT BREAKER-15AMP (ALTERED FROM 483-96TCK14-15A (VU0091))		1
		MISSING ITEM NO. NOT APPLICABLE		

– ITEM NOT ILLUSTRATED

IDENT	PART NUMBER	1234567 NOMENCLATURE	EFFECT FROM TO	UNITS PER ASSY
CG2-P	MTC100YH2-009	.SHELL-PLUG (VK1010) (USED WITH WAFERS: TYPE A, MTC100KT2-1101 TYPE B, MTC100KT2-1102)	094094 097097 102166 168176 178179 181181 183191 193196 198209 211211 214218 220221 223223 225225 229232 234234 236236 238254	1
CG2-P	MTC100YH2-009	.SHELL-PLUG (VK1010) (USED WITH INSERTS: PRIMARY MTC100YC1-001 SECONDARY MTC100YC1-002)	255257 259276	1
CG2-R	MTC100YH2-010	.SHELL-RECEPTACLE (VK1010) (USED WITH WAFERS: TYPE A, MTC100KT2-1103 TYPE B, MTC100KT2-1104)	094094 097097 102166 168176 178179 181181 183191 193196 198209 211211 214218 220221 223223 225225 229232 234234 236236 238254	1
CG2-R	MTC100YH2-010	.SHELL-RECEPTACLE (VK1010) (USED WITH INSERTS: PRIMARY MTC100YC1-003 SECONDARY MTC100YC1-004)	255257 259276	1

MISSING ITEM NO. NOT APPLICABLE

— ITEM NOT ILLUSTRATED

IDENT	PART NUMBER	1234567 NOMENCLATURE	EFFECT FROM TO	UNITS PER ASSY
CP-ZK	M300-1264	.RELAY- (VK6265) (USED WITH SOCKET: M12883-41-16 (V81349))		1
CR1-ZKA	BYX42-600	.DIODE- (VK0004)		1
CR2-ZKA	BYX42-600	.DIODE- (VK0004)		1
CR3-ZKA	BYX42-600	.DIODE- (VK0004)		1
CR4-ZKA	BYX42-600	.DIODE- (VK0004)		1
CR6-ZKA	BYX42-600	.DIODE- (VK0004)		1
CT-ZK	HWBUN1146S10B	.TERMINAL BLOCK- (VK0574)		1
D-GA	A703FSS	.CONTACTOR- (VK4358)		1
DA16-P	MTC100YH1-003	.SHELL-PLUG (VK1010) (USED WITH WAFERS: TYPE A, MTC100KT1-1101 TYPE B, MTC100KT1-1102)	094094 097097 102166 168176 178179 181181 183191 193196 198209 211211 214218 220221 223223 225225 229232 234234 236236 238254	1
DA16-P	MTC100YH1-003	.SHELL-PLUG (VK1010) (USED WITH INSERT: MTC100YC1-005)	255257 259276	1
		MISSING ITEM NO. NOT APPLICABLE		

– ITEM NOT ILLUSTRATED

IDENT	PART NUMBER	1234567 NOMENCLATURE	EFFECT FROM TO	UNITS PER ASSY
DA16-R	MTC100YH1-004	.SHELL-RECEPTACLE (VK1010) (USED WITH WAFERS: TYPE A, MTC100KT1-1103 TYPE B, MTC100KT1-1104)	094094 097097 102166 168176 178179 181181 183191 193196 198209 211211 214218 220221 223223 225225 229232 234234 236236 238254	1
DA16-R	MTC100YH1-004	.SHELL-RECEPTACLE (VK1010) (USED WITH INSERT: MTC100YC1-006)	255257 259276	1
DA38-P	MTCR161-04P	.CONNECTOR-PIN (VK1010)		1
DA38-R	MTCR101-04S	.CONNECTOR-SOCKET (VK1010)		1
DA39-P	MTCR161-04P	.CONNECTOR-PIN (VK1010)		1
DA39-R	MTCR101-04S	.CONNECTOR-SOCKET (VK1010)		1
DA4-P	MTC100YH2-009	.SHELL-PLUG (VK1010) (USED WITH WAFERS: TYPE A, MTC100KT2-1101 TYPE B, MTC100KT2-1102)	094094 097097 102166 168176 178179 181181 183191 193196 198209 211211 214218 220221 223223 225225 229232 234234 236236 238254	1
		MISSING ITEM NO. NOT APPLICABLE		

– ITEM NOT ILLUSTRATED

IDENT	PART NUMBER	1234567 NOMENCLATURE	EFFECT FROM TO	UNITS PER ASSY
DA4-P	MTC100YH2-009	.SHELL-PLUG (VK1010) (USED WITH INSERTS: PRIMARY MTC100YC1-001 SECONDARY MTC100YC1-002)	255257 259276	1
DA4-R	MTC100YH2-010	.SHELL-RECEPTACLE (VK1010) (USED WITH WAFERS: TYPE A, MTC100KT2-1103 TYPE B, MTC100KT2-1104)	094094 097097 102166 168176 178179 181181 183191 193196 198209 211211 214218 220221 223223 225225 229232 234234 236236 238254	1
DA4-R	MTC100YH2-010	.SHELL-RECEPTACLE (VK1010) (USED WITH INSERTS: PRIMARY MTC100YC1-003 SECONDARY MTC100YC1-004)	255257 259276	1
DG	422255-8	.BUNG- (VK1793)		1
DH	422254-9	.BUNG- (VK1793)		1
E-GA	LDG150Y4	.CONTACTOR- (VK4358)		1
F1-ZKA	5920-99-0120076	.FUSE-5AMP (VK0657)		1
F11-ZK	5920-99-0120075	.FUSE-3AMP (VK0657)		1
F2-ZKA	5920-99-0120075	.FUSE-3AMP (VK0657)		1
F28-ZKA	5920-99-0120075	.FUSE-3AMP (VK0657)		1
F3-ZKA	5920-99-0120075	.FUSE-3AMP (VK0657)		1
F4-ZKA	5920-99-0120077	.FUSE-7.5AMP (VK0657)		1
F5-ZKA	5920-99-0120077	.FUSE-7.5AMP (VK0657)		1
F6-ZKA	5920-99-0120076	.FUSE-5AMP (VK0657)		1
		MISSING ITEM NO. NOT APPLICABLE		

- ITEM NOT ILLUSTRATED

IDENT	PART NUMBER	1234567 NOMENCLATURE	EFFECT FROM TO	UNITS PER ASSY
F7-ZKA	L1330A325	.FUSE-325AMP (VU0154)		1
GD	23080-006	.GENERATOR ASSY- (V19527) (POST SB24-316)		1
G1-AB	MS3456L10SL4S	.CONNECTOR-MAGNETIC PICKUP (V96906)		1
G2-CAB	MS3450L10SL3S	.CONNECTOR-LOW PRESSURE GAUGE (V96906)		1
G3-AB	MS3108810SL4S	.CONNECTOR-HIGH OIL TEMPERATURE GAUGE (V96906)		1
H-ZL	1628	.SHUNT- (VK4383)		1
IGN-BA	MS3455L10SL3S	.CONNECTOR-IGNITION EXCITER (V96906)		1
J-GG	HWBUN1146D10B	.TERMINAL BLOCK- (VK0574)		1
J1	MS3476L16-26P	.CONNECTOR-RECEPTACLE (V96906)		1
J10-ZKA	MS3126E22-41P	.CONNECTOR-PLUG (V96906)		1
J11-ZKA	MS3120E22-41S	.CONNECTOR- (V71468) (OPT (VK0316))		1
J12-P	MS3100E10SL4P	.CONNECTOR-PLUG (V96906)		1
J12-R	MS3100E10SL4S	.CONNECTOR- (V96906)		1
J2	MS3476L14-19S	.CONNECTOR- (V96906) (USED WITH BACKSHELL: MS1417-14N)		1
J3	MS34676-12-10S	.CONNECTOR- (V96906) (USED WITH BACKSHELL: MS1417-12N)		1
J4	MS3120F22-41P	.CONNECTOR- (V96906)		1
J5-DE	RR06E16-99SN059	.CONNECTOR-APU CABLE LOOM (VK1793)		1
J7-DE	RR06E16-99SX059	.CONNECTOR-APU CABLE LOOM (VK1793)		1
J9	MS3126E22-41S	.CONNECTOR- (V96906)		1
		MISSING ITEM NO. NOT APPLICABLE		

– ITEM NOT ILLUSTRATED

IDENT	PART NUMBER	1234567 NOMENCLATURE	EFFECT FROM TO	UNITS PER ASSY
K1-ZKA	M400-1265	.RELAY- (VK6265) (USED WITH SOCKET: M12883-40-19 (V81349))		1
K10-ZKA	M302D4L	.RELAY- (VK6265) (USED WITH BASE: S302D1B0)		1
K11-ZKA	A703FSS	.CONTACTOR- (V74063)		1
K12-ZKA	A703FSS	.CONTACTOR- (V74063) (PRE SB49-3254)	102105 107108 111111 113114 117117 119119 121129 132132 135142 144145 147147 150163 166166 168176 178179 181181 183183 185185 187189 191191 193193 195196 199207 209209 214218 220221 223223 225225 229232 234234 236236 238257 259276	1
		MISSING ITEM NO. NOT APPLICABLE		

– ITEM NOT ILLUSTRATED

IDENT	PART NUMBER	1234567 NOMENCLATURE	EFFECT FROM TO	UNITS PER ASSY
K12-ZKA	A703GS	.CONTACTOR-	094094	1
		(V74063)	097097	
		(POST SB49-3254)	106106	
		(MOD 25F878A)	109110	
			112112	
			115116	
			118118	
			120120	
			130131	
			133134	
			143143	
			146146	
			148149	
			164165	
			184184	
			186186	
			190190	
			194194	
			198198	
			208208	
			211211	
K2-ZKA	M300-1264	.RELAY-		1
		(VK6265)		
		(USED WITH SOCKET:		
		M12883-41-16		
		(V81349))		
K3-ZKA	M300-1264	.RELAY-		1
		(VK6265)		
		(USED WITH SOCKET:		
		M12883-41-16		
		(V81349))		
K5-ZKA	M300-1264	.RELAY-		1
		(VK6265)		
		(USED WITH SOCKET:		
		M12883-41-16		
		(V81349))		
K6-ZKA	M300-1264	.RELAY-		1
		(VK6265)		
		(USED WITH SOCKET:		
		M12883-41-16		
		(V81349))		
K7-ZKA	M300-1264	.RELAY-		1
		(VK6265)		
		(USED WITH SOCKET:		
		M12883-41-16		
		(V81349))		
		MISSING ITEM NO. NOT APPLICABLE		

– ITEM NOT ILLUSTRATED

IDENT	PART NUMBER	1234567 NOMENCLATURE	EFFECT FROM TO	UNITS PER ASSY
K8-ZKA	M300-1264	.RELAY- (VK6265) (USED WITH SOCKET: M12883-41-16 (V81349))		1
L-GG	HWBUN1146D10B	.TERMINAL BLOCK- (VK0574)		1
L-ZL	9124-9290	.CONTACTOR- (VK6265)		1
L1-AB	MS3456L10SL4S	.CONNECTOR-START FUEL VALVE (V96906)		1
L2-BA	MS3456L10SL3S	.CONNECTOR-MAIN FUEL VALVE (V96906)		1
L3-AB	MS3456L10SL4S	.CONNECTOR-MAIN FUEL VALVE (V96906)		1
L4-AB	MS3456L10SL4S	.CONNECTOR-START BYPASS VALVE (V96906)		1
M1	169096-1	.HOUR METER- (V13555)		1
M2-DE	BE2315ABCD	.EGT METER- (V1BU13)		1
M3-DE	BE2321ABCD	.RPM INDICATOR- (V1BU13)		1
M4-DE	BE185129ECXX	.AMMETER- (V1BU13)		1
P8	MS3106E24-28S	.CONNECTOR-GENERATOR CONTROLLER (V96906)		1
R1-ZKA	2909-2015	.SHUNT- (VK0100)		1
SQ	HWBUN1146D10B	.TERMINAL BLOCK- (VK0574)		1
SR	HWBUN1146D10B	.TERMINAL BLOCK- (VK0574)		1
S1-DE	23AT74T2	.SWITCH- (V91929) (OPT (VK6596))		1
S1-ZKA	WC1503	.SWITCH- (VK0653)		1
S12	17343-62-500	.SWITCH-FIRE DETECTOR (V15801)		1
S13	67100-1-32-350	.SWITCH-GENERATOR OVERHEAT (V15801)		1
S2-DE	2PB732T2	.SWITCH- (V91929) (OPT (VK6596))		1
S20	17343-62-500	.SWITCH-FIRE DETECTOR (V15801)		1
		MISSING ITEM NO. NOT APPLICABLE		

– ITEM NOT ILLUSTRATED

IDENT	PART NUMBER	1234567 NOMENCLATURE	EFFECT FROM TO	UNITS PER ASSY
S21	17343-62-500	.SWITCH-FIRE DETECTOR (V15801)		1
S3-DE	23AT73T2	.SWITCH- (V91929) (OPT (VK6596))		1
S4-DE	2PB732T2	.SWITCH- (V91929) (OPT (VK6596))		1
S5-DE	2PB717T2	.SWITCH- (V91929) (OPT (VK6506))		1
S6-DE	23AT73T2	.SWITCH- (V91929) (OPT (VK6596))		1
S7-DE	4TL1-70	.SWITCH- (VK0653)		1
S8-DE	2PB732T2	.SWITCH- (V91929) (OPT (VK6596))		1
T-GA	LDA150A8	.CONTACTOR- (VK4358)		1
TB1-ZKA	MRTB20E04-111	.TERMINAL JUNCTION MODULE- (V14283)		1
TB2-ZKA	MRTB20E04-111	.TERMINAL JUNCTION MODULE- (V14283)		1
TB3-ZKA	MRTB20E57-111	.TERMINAL JUNCTION MODULE- (V14283)		1
TB301	HWBUN1146S10B	.TERMINAL BLOCK- (VK0574)		1
TB301-1-4	104026-1	.START EVENT COUNTER- (V55820)		1
TB301A	HWB1146S3B	.TERMINAL BLOCK- (VK0574)		1
TB4-ZKA	MRTB20E57-111	.TERMINAL JUNCTION MODULE- (V14283)		1
TB6-ZKA	MRTB16E03-111	.TERMINAL JUNCTION MODULE- (V14283)		1
TC1	160021-3	.THERMOCOUPLE- (V55820)		1
TC2	160021-3	.THERMOCOUPLE- (V55820)		1
TD	MS27212-1	.TERMINAL BLOCK- (V96906)		1
TSA	FGBA24	.FUEL SHUT OFF VALVE- (VK0686)		1
U-ZL	A84MAS	.CONTACTOR- (V74063)		1
		MISSING ITEM NO. NOT APPLICABLE		

– ITEM NOT ILLUSTRATED

IDENT	PART NUMBER	1234567 NOMENCLATURE	EFFECT FROM TO	UNITS PER ASSY
Z1	161043-700	.SEQUENCE UNIT- (UNIT EXCHANGE ITEM) (V55820) (PRE MOD 259890A) (FOR SPARES PROCURE 161043-701)		1
Z1	161043-701	.SEQUENCE UNIT- (UNIT EXCHANGE ITEM) (V55820) (PRE MOD 259890A) (FOR SPARES PROCURE IN LIEU OF 161043-700)		1
Z2	51509-006C	.CONTROL UNIT- (UNIT EXCHANGE ITEM) (V09455) (MOD 253159A) (FOR SPARES PROCURE 51532-006H)		1
Z2	51539-006H	.CONTROL UNIT- (UNIT EXCHANGE ITEM) (V09455) (MOD 253159A) (FOR SPARES PROCURE IN LIEU OF 51509-006C)		1
Z3	30402104	.FIRE BOTTLE- (UNIT EXCHANGE ITEM) (V05167)		1
Z4	160290-100	.BLEED VALVE- (V55820)		1
Z5	160240-400	.ANALOG CONVERTER- (VK7391)		1
1-AB-DE	BYW54	.DIODE- (VK0004)		1
1-BC-DE	BYW54	.DIODE- (VK0004)		1
2-AB-DE	BYW54	.DIODE- (VK0004)		1
2-BC-DE	BYW54	.DIODE- (VK0004)		1
3-AB-DE	BYW54	.DIODE- (VK0004)		1
3-BC-DE	BYW54	.DIODE- (VK0004)		1
4-AB-DE	BYW54	.DIODE- (VK0004)		1
4-BC-DE	BYW54	.DIODE- (VK0004)		1
5-AB-DE	BYW54	.DIODE- (VK0004)		1
		MISSING ITEM NO. NOT APPLICABLE		

– ITEM NOT ILLUSTRATED

IDENT	PART NUMBER	1234567 NOMENCLATURE	EFFECT FROM TO	UNITS PER ASSY
5-BC-DE	BYW54	.DIODE- (VK0004)		1
6-AB-DE	BYW54	.DIODE- (VK0004)		1
		MISSING ITEM NO. NOT APPLICABLE		

– ITEM NOT ILLUSTRATED

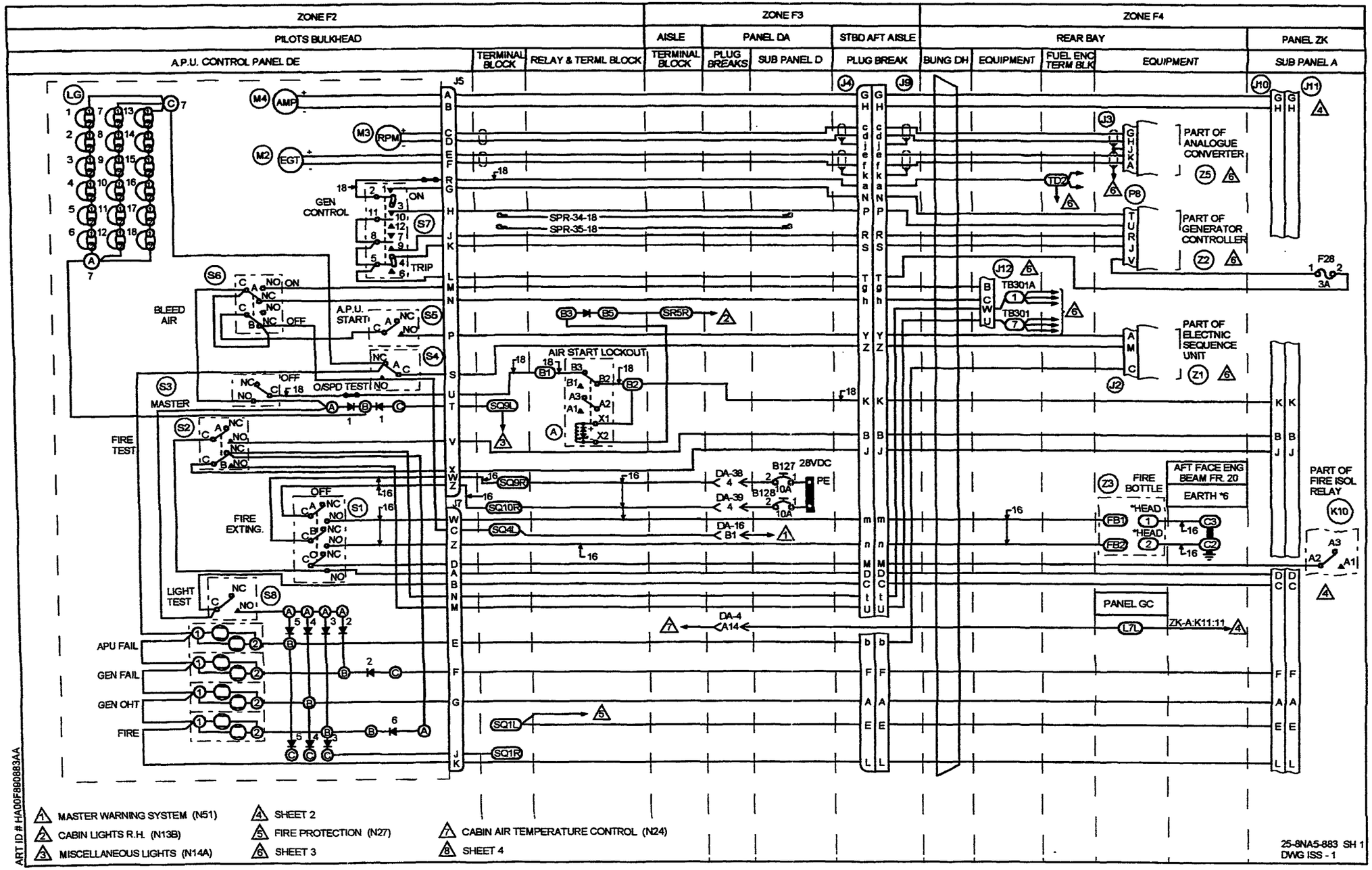
ZONE F2
ZONE F3
ZONE F4
PILOTS BULKHEAD
AISLE
PANEL DA
STBD AFT AISLE
REAR BAY
PANEL ZK
A.P.U. CONTROL PANEL DE
TERMINAL BLOCK
RELAY & TERML BLOCK
TERMINAL BLOCK
PLUG BREAKS
SUB PANEL D
PLUG BREAK
BUNG DH
EQUIPMENT
FUEL ENG TERM BLK
EQUIPMENT
SUB PANEL A
PART OF ANALOGUE CONVERTER
PART OF GENERATOR CONTROLLER
PART OF ELECTNIC SEQUENCE UNIT
PART OF FIRE ISOL RELAY
GEN CONTROL
ON
TRIP
SPR-34-18
SPR-35-18
BLEED AIR
A.P.U. START
OFF
AIR START LOCKOUT
MASTER
O/SPD TEST
FIRE TEST
FIRE EXTING.
LIGHT TEST
APU FAIL
GEN FAIL
GEN OHT
FIRE
28VDC
FIRE BOTTLE
AFT FACE ENG BEAM FR. 20
EARTH *6
PANEL GC
ZK-A:K11:11
1 MASTER WARNING SYSTEM (N51)
2 CABIN LIGHTS R.H. (N13B)
3 MISCELLANEOUS LIGHTS (N14A)
4 SHEET 2
5 FIRE PROTECTION (N27)
6 SHEET 3
7 CABIN AIR TEMPERATURE CONTROL (N24)
8 SHEET 4
ART ID # HA00F890883AA
25-8NA5-883 SH 1
DWG ISS - 1

ZONE F4

PANEL ZK SUB PANEL A

EQUIPMENT

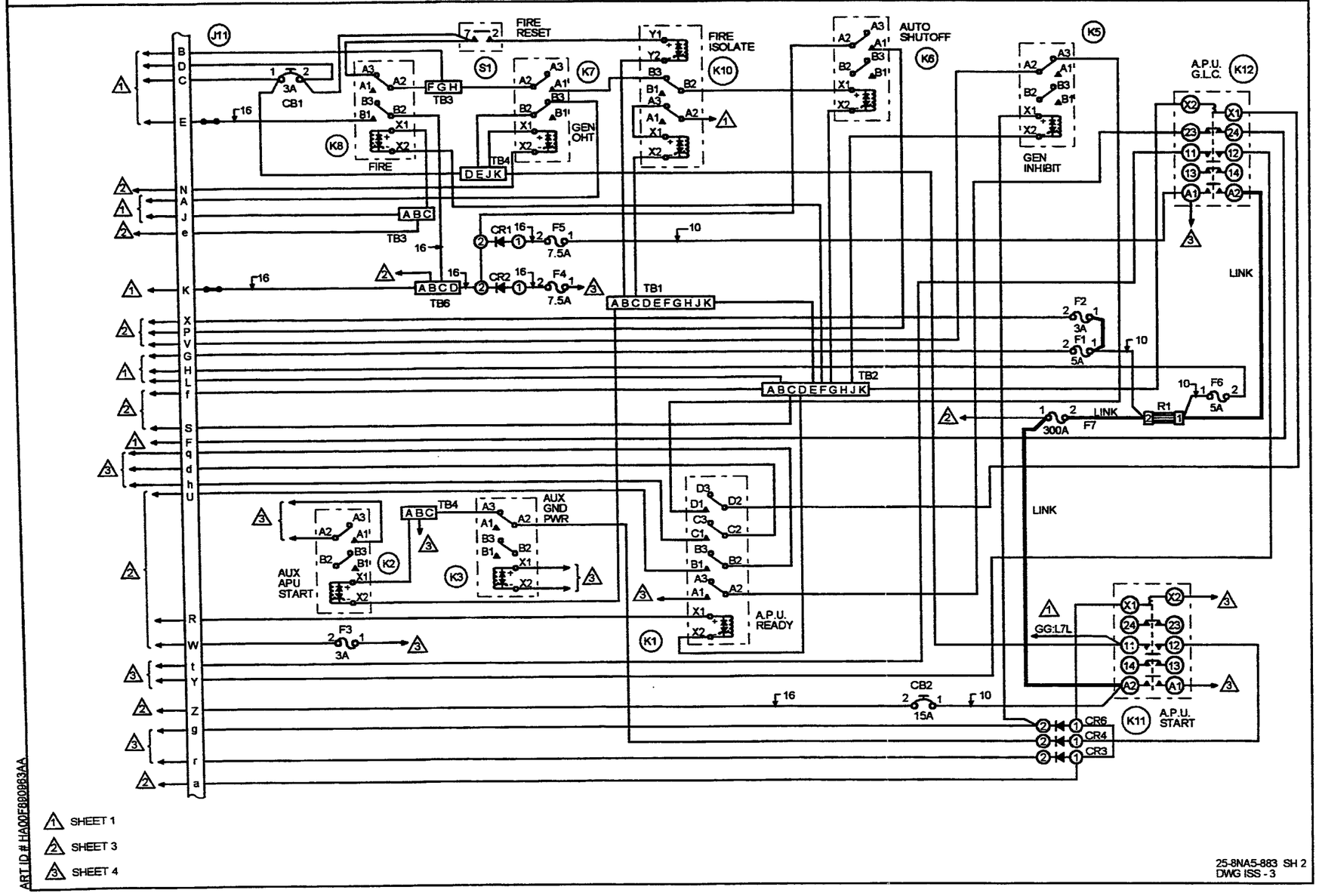

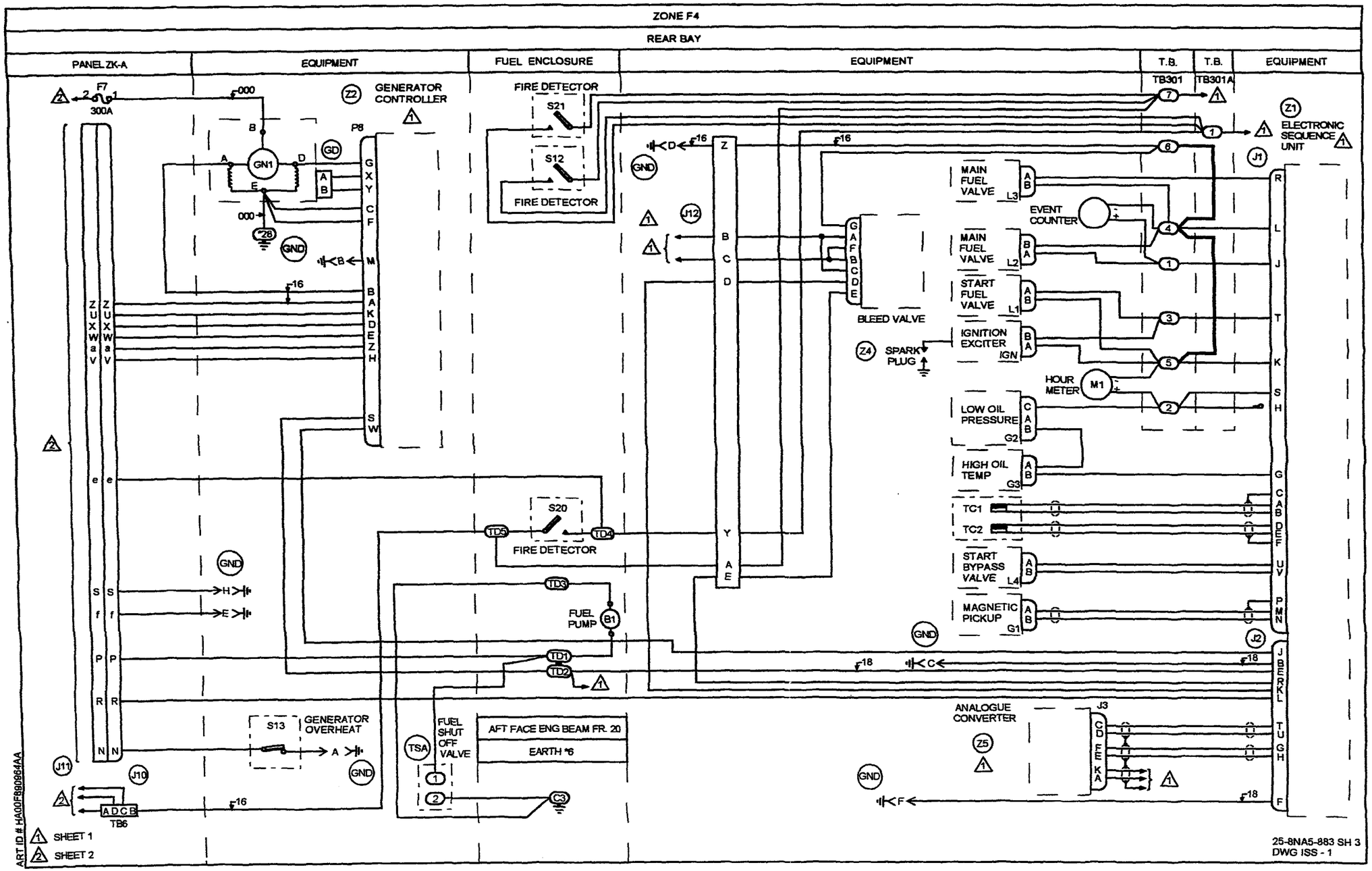
ZONE F4
REAR BAY
PANEL ZK-A
EQUIPMENT
FUEL ENCLOSURE
EQUIPMENT
T.B.
T.B.
EQUIPMENT
TB301
TB301A
F7
300A
GENERATOR CONTROLLER
FIRE DETECTOR
S21
S12
FIRE DETECTOR
ELECTRONIC SEQUENCE UNIT
MAIN FUEL VALVE
EVENT COUNTER
MAIN FUEL VALVE
START FUEL VALVE
BLEED VALVE
IGNITION EXCITER
SPARK PLUG
HOUR METER
LOW OIL PRESSURE
HIGH OIL TEMP
TC1
TC2
START BYPASS VALVE
MAGNETIC PICKUP
S20
FIRE DETECTOR
FUEL PUMP
GENERATOR OVERHEAT
FUEL SHUT OFF VALVE
AFT FACE ENG BEAM FR. 20
EARTH #6
ANALOGUE CONVERTER
TB6
SHEET 1
SHEET 2
ART ID # HA00F690964AA
25-8NA5-883 SH 3
DWG ISS - 1

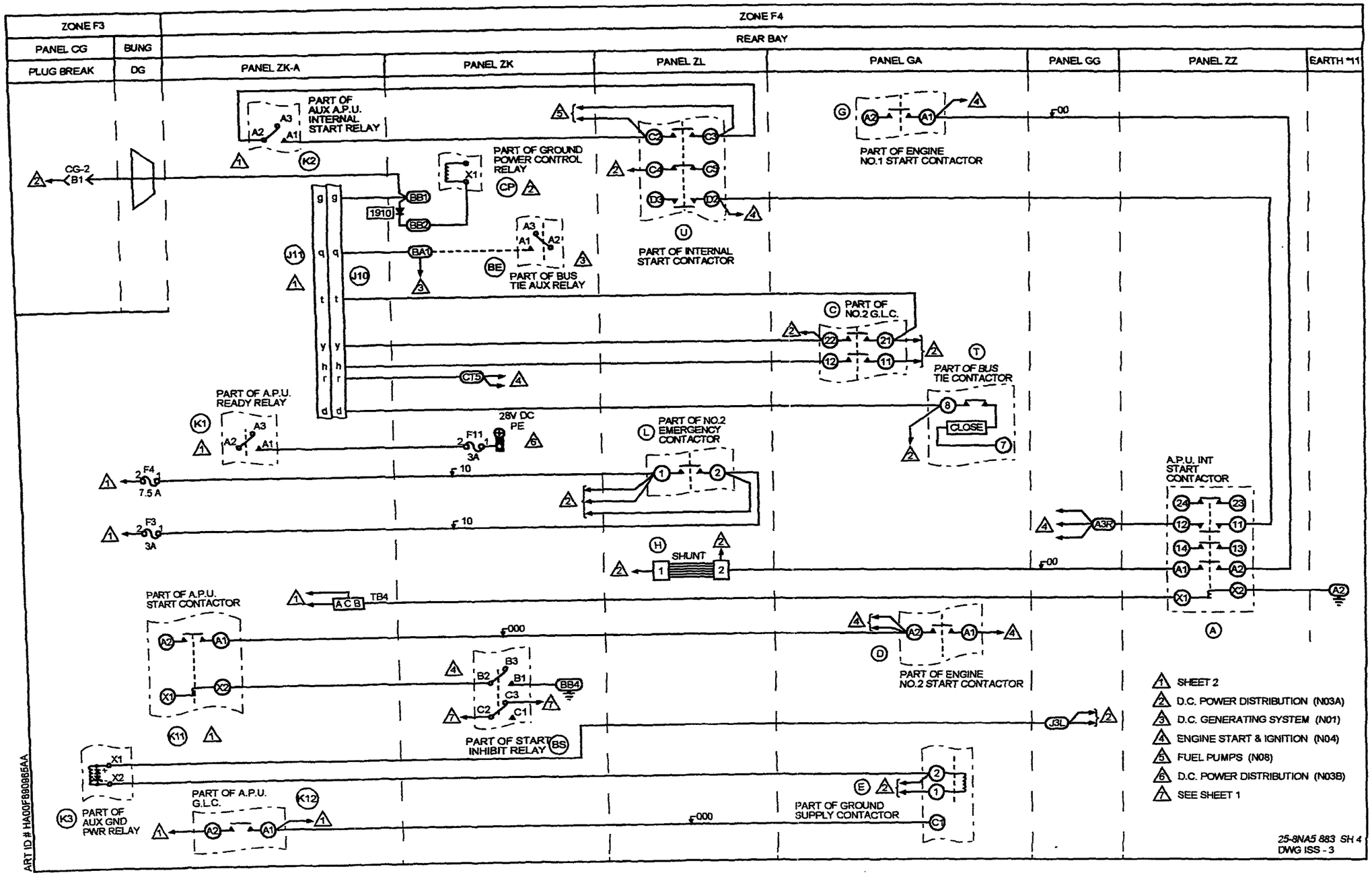
ZONE F3
ZONE F4
PANEL CG
BUNG
REAR BAY
PLUG BREAK
DG
PANEL ZK-A
PANEL ZK
PANEL ZL
PANEL GA
PANEL GG
PANEL ZZ
EARTH *11
PART OF AUX A.P.U. INTERNAL START RELAY
PART OF GROUND POWER CONTROL RELAY
PART OF ENGINE NO.1 START CONTACTOR
PART OF INTERNAL START CONTACTOR
PART OF BUS TIE AUX RELAY
PART OF NO.2 G.L.C.
PART OF BUS TIE CONTACTOR
PART OF A.P.U. READY RELAY
28V DC PE
PART OF NO.2 EMERGENCY CONTACTOR
A.P.U. INT START CONTACTOR
SHUNT
PART OF A.P.U. START CONTACTOR
PART OF ENGINE NO.2 START CONTACTOR
PART OF START INHIBIT RELAY
PART OF A.P.U. G.L.C.
PART OF AUX GND PWR RELAY
PART OF GROUND SUPPLY CONTACTOR
CG-2
B1
1910
BB1
BB2
BA1
CT5
CLOSE
F11
3A
F4
7.5 A
F3
3A
TB4
A C B
BB4
J3L
A3R
SHEET 2
D.C. POWER DISTRIBUTION (N03A)
D.C. GENERATING SYSTEM (N01)
ENGINE START & IGNITION (N04)
FUEL PUMPS (N08)
D.C. POWER DISTRIBUTION (N03B)
SEE SHEET 1
25-9NA5 883 SH 4
DWG ISS - 3
ART ID # HA00F8909865AA

IDENT	PART NUMBER	1234567 NOMENCLATURE	EFFECT FROM TO	UNITS PER ASSY
		AUXILIARY POWER UNIT	167167 180180 182182 192192 197197 212212 219219 222222 224224 226228	
	25-8NA5-883	WIRING DIAGRAM- (MODIFIED BY SB49-037-25A253A) (MOD 259404C)		RF
A	M300-1264	.RELAY- (VK6265) (USED WITH SOCKET: M12883-41-16 (V81349))		1
A-GG	72544-030-0AV2	.TERMINAL BLOCK- (VK0574)		1
A-ZZ	703FSS	.CONTACTOR- (V74063)		1
B	HWBUN1736S5B	.TERMINAL BLOCK- (VK0574) (USED WITH DIODE: 1N4005 (VK5519) (OPT BYW54 (VK0004)))		1
BA-ZK	HWBUN1146S10B	.TERMINAL BLOCK- (VK0574)		1
BB-ZK	HWBUN1146S10B	.TERMINAL BLOCK- (VK0574) (USED WITH DIODE: 1N4005 (VK5519) (OPT BYW54 (VK0004)))		1
BE-ZK	M300-1264	.RELAY- (VK6265) (USED WITH SOCKET: M12883-41-16 (V81349))		1
BS-ZK	M400-1265	.RELAY- (VK6265) (USED WITH SOCKET: M12883-40-19 (V81349))		1
		MISSING ITEM NO. NOT APPLICABLE		

– ITEM NOT ILLUSTRATED

IDENT	PART NUMBER	1234567 NOMENCLATURE	EFFECT FROM TO	UNITS PER ASSY
B1	2B6-72	.PUMP ASSY-FUEL (V26433) (OPT (V1BU13))		1
B127-DAD	25-8NF2217-10	.CIRCUIT BREAKER-10AMP (ALTERED FROM 483-96TCK14-10A (VU0091))		1
B128-DAD	25-8NF2217-10	.CIRCUIT BREAKER-10AMP (ALTERED FROM 483-96TCK14-10A (VU0091))		1
C-GA	A703ZS	.CONTACTOR- (V74063)		1
CB1-ZKA	483TCG11J5-3A	.CIRCUIT BREAKER-3AMP (VU0091)		1
CB2-ZKA	25-8NF2217-15	.CIRCUIT BREAKER-15AMP (ALTERED FROM 483-96TCK14-15A (VU0091))		1
CG2-P	MTC100YH2-009	.SHELL-PLUG (VK1010) (USED WITH WAFERS: TYPE A, MTC100KT2-1101 TYPE B, MTC100KT2-1102)		1
CG2-R	MTC100YH2-010	.SHELL-RECEPTACLE (VK1010) (USED WITH WAFERS: TYPE A, MTC100KT2-1103 TYPE B, MTC100KT2-1104)		1
CP-ZK	M300-1264	.RELAY- (VK6265) (USED WITH SOCKET: M12883-41-16 (V81349))		1
CR1-ZKA	BYX42-600	.DIODE- (VK0004)		1
CR2-ZKA	BYX42-600	.DIODE- (VK0004)		1
CR3-ZKA	BYX42-600	.DIODE- (VK0004)		1
CR4-ZKA	BYX42-600	.DIODE- (VK0004)		1
CR6-ZKA	BYX42-600	.DIODE- (VK0004)		1
CT-ZK	HWBUN1146S10B	.TERMINAL BLOCK- (VK0574)		1
D-GA	A703FSS	.CONTACTOR- (VK4358)		1
		MISSING ITEM NO. NOT APPLICABLE		

- ITEM NOT ILLUSTRATED

IDENT	PART NUMBER	1234567 NOMENCLATURE	EFFECT FROM TO	UNITS PER ASSY
DA16-P	MTC100YH1-003	.SHELL-PLUG (VK1010) (USED WITH WAFERS: TYPE A, MTC100KT1-1101 TYPE B, MTC100KT1-1102)		1
DA16-R	MTC100YH1-004	.SHELL-RECEPTACLE (VK1010) (USED WITH WAFERS: TYPE A, MTC100KT1-1103 TYPE B, MTC100KT1-1104)		1
DA38-P	MTCR161-04P	.CONNECTOR-PIN (VK1010)		1
DA38-R	MTCR101-04S	.CONNECTOR-SOCKET (VK1010)		1
DA39-P	MTCR161-04P	.CONNECTOR-PIN (VK1010)		1
DA39-R	MTCR101-04S	.CONNECTOR-SOCKET (VK1010)		1
DA4-P	MTC100YH2-009	.SHELL-PLUG (VK1010) (USED WITH WAFERS: TYPE A, MTC100KT2-1101 TYPE B, MTC100KT2-1102)		1
DA4-R	MTC100YH2-010	.SHELL-RECEPTACLE (VK1010) (USED WITH WAFERS: TYPE A, MTC100KT2-1103 TYPE B, MTC100KT2-1104)		1
DG	422255-8	.BUNG- (VK1793)		1
DH	422254-9	.BUNG- (VK1793)		1
E-GA	LDG150Y4	.CONTACTOR- (VK4358)		1
F1-ZKA	5920-99-0120076	.FUSE-5AMP (VK0657)		1
F11-ZK	5920-99-0120075	.FUSE-3AMP (VK0657)		1
F2-ZKA	5920-99-0120075	.FUSE-3AMP (VK0657)		1
F28-ZKA	5920-99-0120075	.FUSE-3AMP (VK0657)		1
F3-ZKA	5920-99-0120075	.FUSE-3AMP (VK0657)		1
F4-ZKA	5920-99-0120077	.FUSE-7.5AMP (VK0657)		1
F5-ZKA	5920-99-0120077	.FUSE-7.5AMP (VK0657)		1
F6-ZKA	5920-99-0120076	.FUSE-5AMP (VK0657)		1
		MISSING ITEM NO. NOT APPLICABLE		

– ITEM NOT ILLUSTRATED

IDENT	PART NUMBER	1234567 NOMENCLATURE	EFFECT FROM TO	UNITS PER ASSY
F7-ZKA	L1330A325	.FUSE-325AMP (VU0154)		1
G-GA	A703FSS	.CONTACTOR- (VK4358)		1
GD	23080-006	.GENERATOR ASSY-STARTER (V19527) (POST SB24-316) (MOD 257671C)		1
G1-AB	MS3456L10SL4S	.CONNECTOR-MAGNETIC PICKUP (V96906)		1
G2-CAB	MS3450L10SL3S	.CONNECTOR-LOW PRESSURE GAUGE (V96906)		1
G3-AB	MS3108810SL4S	.CONNECTOR-HIGH OIL TEMPERATURE GAUGE (V96906)		1
H-ZL	1628	.SHUNT- (VK4383)		1
J-GG	72544-030-0AV2	.TERMINAL BLOCK- (VK0574)		1
J1-P	MS3476L16-26P	.CONNECTOR-PLUG (V96906)		1
J10-ZKA	MS3126E22-41P	.CONNECTOR-PLUG (V96906)		1
J11-ZKA	MS3120E22-41S	.CONNECTOR-SOCKET (V96906)		1
J12-P	MS3100E10SL4P	.CONNECTOR-PLUG (V96906)		1
J12-R	MS3100E10SL4S	.CONNECTOR-SOCKET (V96906)		1
J2	MS3476L14-19S	.CONNECTOR-SOCKET (V96906) (USED WITH BACKSHELL: MS1417-14N)		1
J3	MS34676-12-10S	.CONNECTOR-SOCKET (V96906) (USED WITH BACKSHELL: MS1417-12N)		1
J4	MS3120F22-41P	.CONNECTOR-PLUG (V96906)		1
J5-DE	RR06E16-99SN059	.CONNECTOR-SOCKET (VK1793)		1
J7-DE	RR06E16-99SX059	.CONNECTOR-SOCKET (VK1793)		1
J9	MS3126E22-41S	.CONNECTOR-SOCKET (V96906)		1
		MISSING ITEM NO. NOT APPLICABLE		

– ITEM NOT ILLUSTRATED

IDENT	PART NUMBER	1234567 NOMENCLATURE	EFFECT FROM TO	UNITS PER ASSY
K1-ZKA	M400-1265	.RELAY- (VK6265) (USED WITH SOCKET: M12883-40-19 (V81349))		1
K10-ZKA	M302D4L	.RELAY- (VK6265) (USED WITH BASE: S302D1B0)		1
K11-ZKA	A703FSS	.CONTACTOR- (V74063)		1
K12-ZKA	A703GS	.CONTACTOR- (V74063) (POST SB49-3254) (MOD 25F878A)		1
K2-ZKA	M300-1264	.RELAY- (VK6265) (USED WITH SOCKET: M12883-41-16 (V81349))		1
K3-ZKA	M300-1264	.RELAY- (VK6265) (USED WITH SOCKET: M12883-41-16 (V81349))		1
K5-ZKA	M300-1264	.RELAY- (VK6265) (USED WITH SOCKET: M12883-41-16 (V81349))		1
K6-ZKA	M300-1264	.RELAY- (VK6265) (USED WITH SOCKET: M12883-41-16 (V81349))		1
K7-ZKA	M300-1264	.RELAY- (VK6265) (USED WITH SOCKET: M12883-41-16 (V81349))		1
K8-ZKA	M300-1264	.RELAY- (VK6265) (USED WITH SOCKET: M12883-41-16 (V81349))		1
L-GG	72544-030-0AV2	.TERMINAL BLOCK- (VK0574)		1
L-ZL	9124-9290	.CONTACTOR- (VK6265)		1
		MISSING ITEM NO. NOT APPLICABLE		

– ITEM NOT ILLUSTRATED

IDENT	PART NUMBER	1234567 NOMENCLATURE	EFFECT FROM TO	UNITS PER ASSY
LG-DE	6240-99-9959182	.FILAMENT- (POSITIONS LG1 TO LG18) (VK0690)		18
L1-AB	MS3456L10SL4S	.CONNECTOR-START FUEL VALVE (V96906)		1
L2-BA	MS3456L10SL3S	.CONNECTOR-MAIN FUEL VALVE (V96906)		1
L3-AB	MS3456L10SL4S	.CONNECTOR-MAIN FUEL VALVE (V96906)		1
L4-AB	MS3456L10SL4S	.CONNECTOR-START BYPASS VALVE (V96906)		1
M1	169096-1	.METER-HOUR (V13555)		1
M2	104026-1	.COUNTER-START (V55820)		1
M2-DE	BE2315ABCD	.METER-EXHAUST GAS TEMPERATURE (V1BU13)		1
M3-DE	BE2321ABCD	.INDICATOR-REVOLUTION PER MINUTE (V1BU13)		1
M4-DE	BE185129ECXX	.AMMETER- (V1BU13)		1
P8	MS3106E24-28S	.CONNECTOR-GENERATOR CONTROLLER (V96906)		1
R1-ZKA	2909-2015	.SHUNT- (VK0100)		1
SQ	HWBUN1146D10B	.TERMINAL BLOCK- (VK0574)		1
SR	HWBUN1146D10B	.TERMINAL BLOCK- (VK0574)		1
S1-DE	23AT74T2	.SWITCH- (V91929) (OPT (VK6596))		1
S1-ZKA	WC1503	.SWITCH- (VK0653)		1
S12	17343-62-500	.SWITCH-FIRE DETECTOR (V15801)		1
S13	67100-1-32-350	.SWITCH-GENERATOR OVERHEAT (V15801)		1
S2-DE	2PB732T2	.SWITCH- (V91929) (OPT (VK6596))		1
S20	17343-62-500	.SWITCH-FIRE DETECTOR (V15801)		1
S21	17343-62-500	.SWITCH-FIRE DETECTOR (V15801)		1
		MISSING ITEM NO. NOT APPLICABLE		

– ITEM NOT ILLUSTRATED

IDENT	PART NUMBER	1234567 NOMENCLATURE	EFFECT FROM TO	UNITS PER ASSY
S3-DE	23AT73T2	.SWITCH- (V91929) (OPT (VK6596))		1
S4-DE	2PB732T2	.SWITCH- (V91929) (OPT (VK6596))		1
S5-DE	2PB717T2	.SWITCH- (V91929) (OPT (VK6506))		1
S6-DE	23AT73T2	.SWITCH- (V91929) (OPT (VK6596))		1
S7-DE	4TL1-70	.SWITCH- (VK0653)		1
S8-DE	2PB732T2	.SWITCH- (V91929) (OPT (VK6596))		1
T-GA	LDA150A8	.CONTACTOR- (VK4358)		1
TB1-ZKA	MRTB20E04-111	.TERMINAL JUNCTION MODULE- (V14283)		1
TB2-ZKA	MRTB20E04-111	.TERMINAL JUNCTION MODULE- (V14283)		1
TB3-ZKA	MRTB20E57-111	.TERMINAL JUNCTION MODULE- (V14283)		1
TB301	HWBUN1146S10B	.TERMINAL BLOCK- (VK0574)		1
TB301A	HWB1146S3B	.TERMINAL BLOCK- (VK0574)		1
TB4-ZKA	MRTB20E57-111	.TERMINAL JUNCTION MODULE- (V14283)		1
TB6-ZKA	MRTB16E03-111	.TERMINAL JUNCTION MODULE- (V14283)		1
TC1	160021-3	.THERMOCOUPLE- (V55820)		1
TC2	160021-3	.THERMOCOUPLE- (V55820)		1
TD	MS27212-1	.TERMINAL BLOCK- (V96906)		1
TSA	FGBA24	.VALVE ASSY-FUEL SHUT OFF (VK0686)		1
U-ZL	A84MAS	.CONTACTOR- (V74063)		1
Z1	161043-700	.SEQUENCE UNIT- (UNIT EXCHANGE ITEM) (V55820) (PRE MOD 259890A) (FOR SPARES PROCURE 161043-701)		1
		MISSING ITEM NO. NOT APPLICABLE		

– ITEM NOT ILLUSTRATED

IDENT	PART NUMBER	1234567 NOMENCLATURE	EFFECT FROM TO	UNITS PER ASSY
Z1	161043-701	.SEQUENCE UNIT- (UNIT EXCHANGE ITEM) (V55820) (PRE MOD 259890A) (FOR SPARES PROCURE IN LIEU OF 161043-700)		1
Z2	51509-006C	.CONTROL UNIT- (UNIT EXCHANGE ITEM) (V09455) (PRE MOD 253159A) (FOR SPARES PROCURE 51539-006H)		1
Z2	51539-006H	.CONTROL UNIT- (UNIT EXCHANGE ITEM) (V09455) (MOD 253159A) (FOR SPARES PROCURE IN LIEU OF 51509-006C)		1
Z3	30402104	.FIRE BOTTLE- (UNIT EXCHANGE ITEM) (V05167)		1
Z4	160290-100	.VALVE-BLEED AIR (V55820)		1
Z5	160240-400	.CONVERTER ASSY-ANALOGUE (VK7391)		1
1-AB-DE	BYW54	.DIODE- (VK0004)		1
1-BC-DE	BYW54	.DIODE- (VK0004)		1
1GN-BA	MS3455L10SL3S	.CONNECTOR-IGNITION EXCITER (V96906)		1
2-AB-DE	BYW54	.DIODE- (VK0004)		1
2-BC-DE	BYW54	.DIODE- (VK0004)		1
3-AB-DE	BYW54	.DIODE- (VK0004)		1
3-BC-DE	BYW54	.DIODE- (VK0004)		1
4-AB-DE	BYW54	.DIODE- (VK0004)		1
4-BC-DE	BYW54	.DIODE- (VK0004)		1
5-AB-DE	BYW54	.DIODE- (VK0004)		1
5-BC-DE	BYW54	.DIODE- (VK0004)		1
6-AB-DE	BYW54	.DIODE- (VK0004)		1
		MISSING ITEM NO. NOT APPLICABLE		

– ITEM NOT ILLUSTRATED

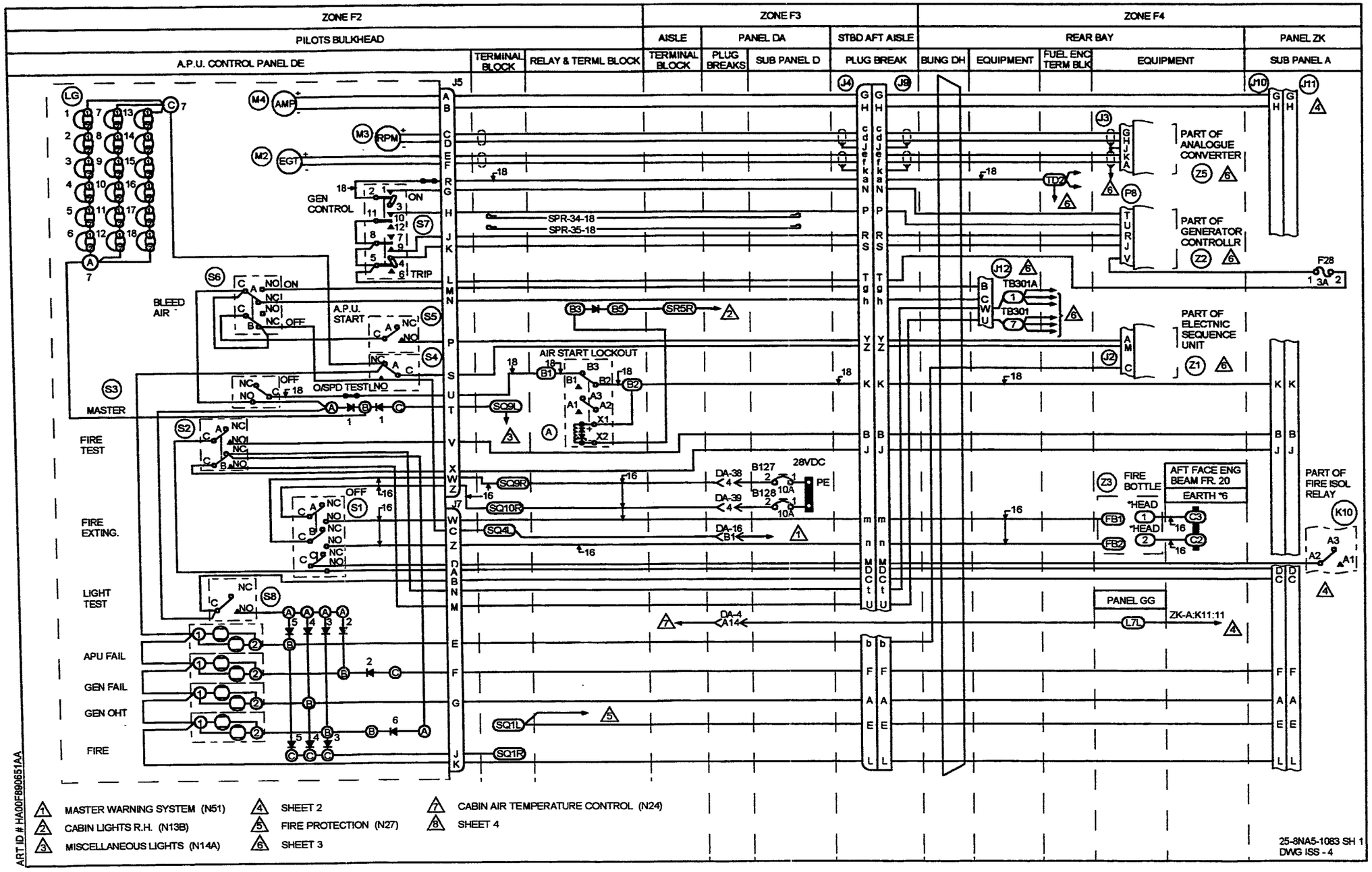
ZONE F2
ZONE F3
ZONE F4
PILOTS BULKHEAD
AISLE
PANEL DA
STBD AFT AISLE
REAR BAY
PANEL ZK
A.P.U. CONTROL PANEL DE
TERMINAL BLOCK
RELAY & TERML BLOCK
TERMINAL BLOCK
PLUG BREAKS
SUB PANEL D
PLUG BREAK
BUNG DH
EQUIPMENT
FUEL ENG TERM BLK
EQUIPMENT
SUB PANEL A
PART OF ANALOGUE CONVERTER
PART OF GENERATOR CONTROLLR
PART OF ELECTNIC SEQUENCE UNIT
PART OF FIRE ISOL RELAY
GEN CONTROL
BLEED AIR
A.P.U. START
O/SPD TEST
AIR START LOCKOUT
MASTER
FIRE TEST
FIRE EXTING.
LIGHT TEST
APU FAIL
GEN FAIL
GEN OHT
FIRE
SPR-34-18
SPR-35-18
SR5R
SQ9L
SQ9R
SQ10R
SQ4L
SQ1L
SQ1R
28VDC
FIRE BOTTLE
AFT FACE ENG BEAM FR. 20
EARTH
PANEL GG
ZK-A:K11:11
MASTER WARNING SYSTEM (N51)
CABIN LIGHTS R.H. (N13B)
MISCELLANEOUS LIGHTS (N14A)
SHEET 2
FIRE PROTECTION (N27)
SHEET 3
CABIN AIR TEMPERATURE CONTROL (N24)
SHEET 4
ART ID # HA00F890651AA
25-8NA5-1083 SH 1
DWG ISS - 4

ZONE F4

PANEL ZK SUB PANEL A

EQUIPMENT

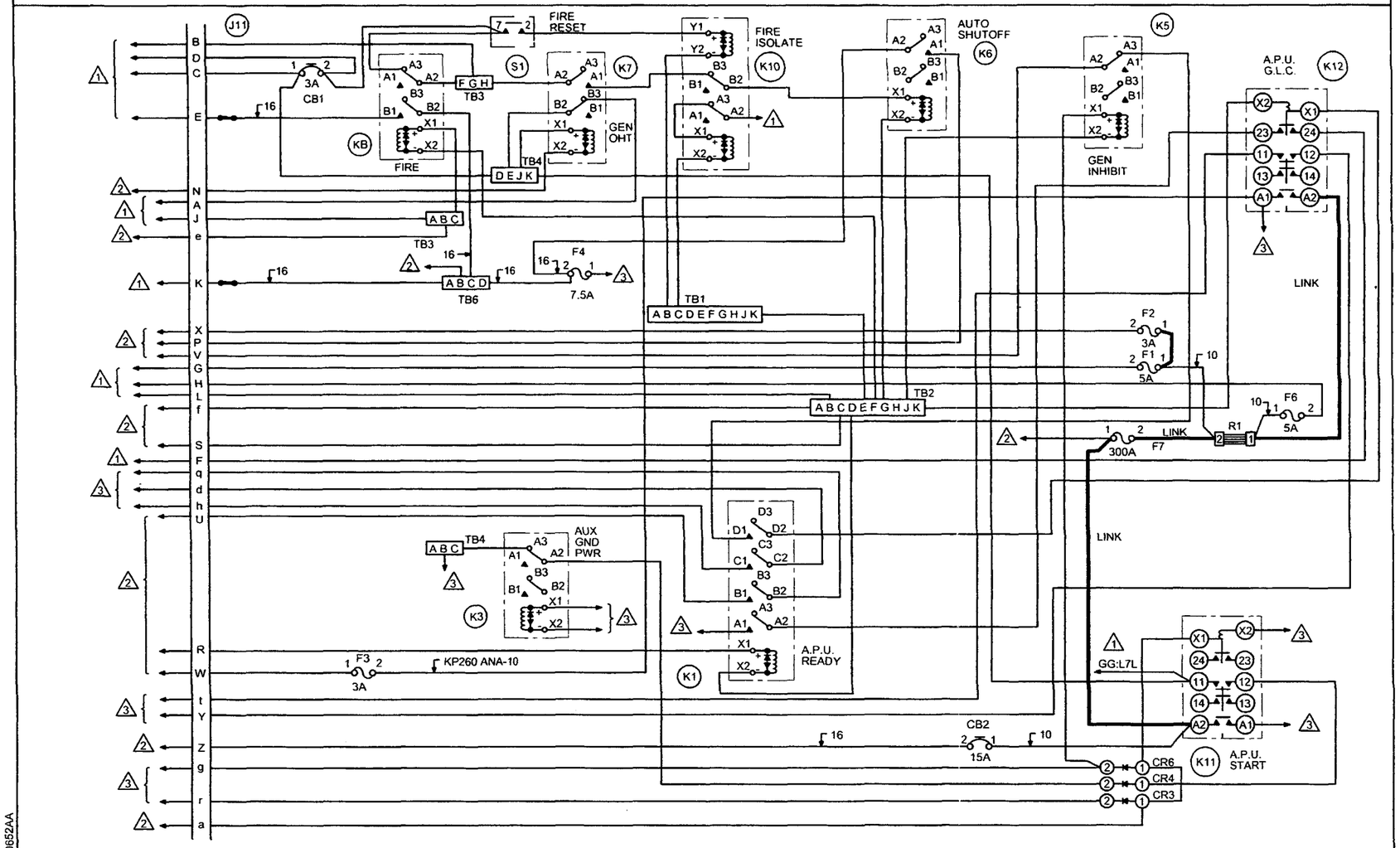

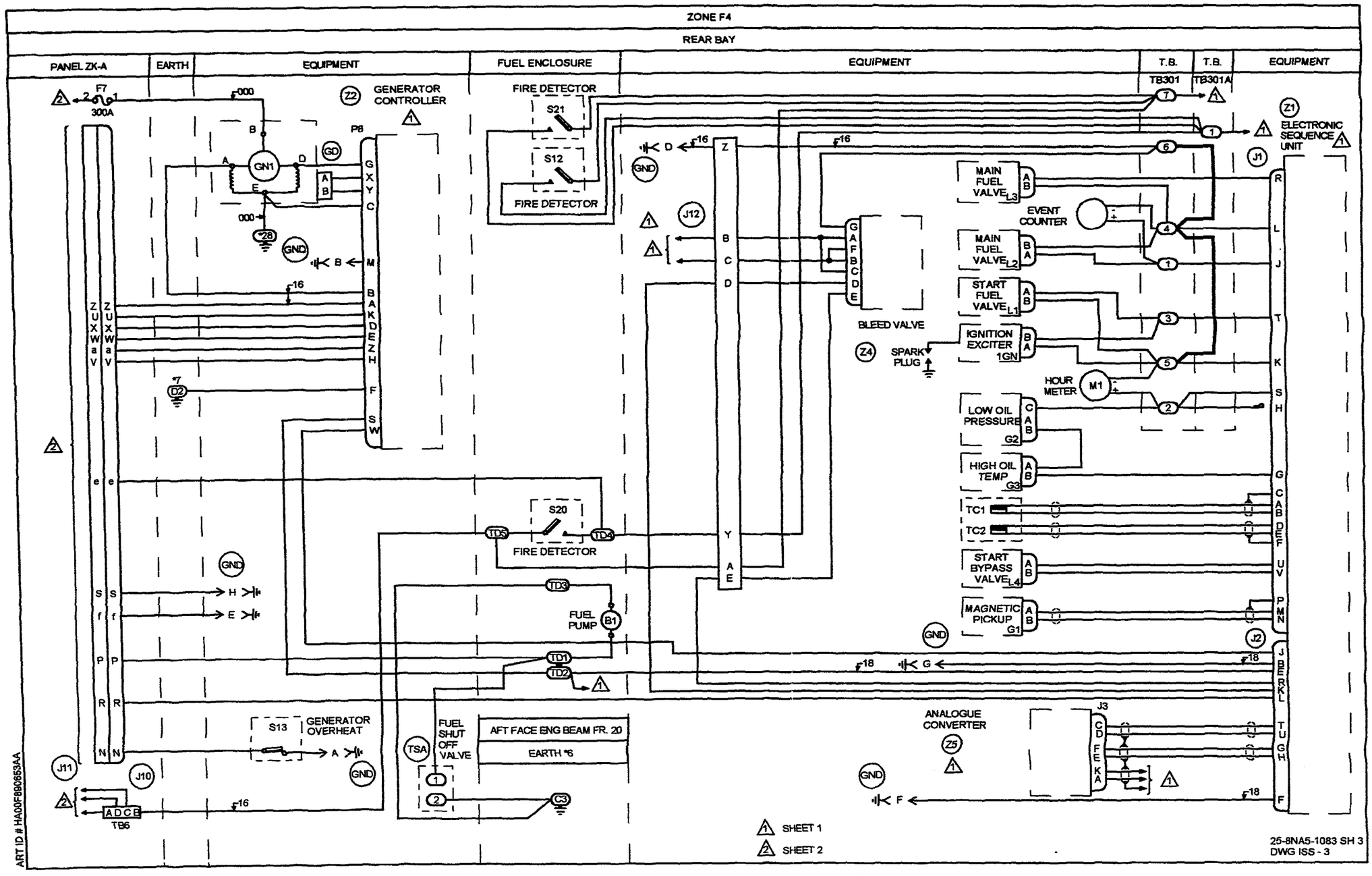
ZONE F4
REAR BAY
PANEL ZK-A
EARTH
EQUIPMENT
FUEL ENCLOSURE
EQUIPMENT
T.B. TB301
T.B. TB301A
EQUIPMENT
F7 300A
GENERATOR CONTROLLER
Z2
GN1
P8
FIRE DETECTOR
S21
S12
FIRE DETECTOR
Z1
ELECTRONIC SEQUENCE UNIT
J1
MAIN FUEL VALVE L3
EVENT COUNTER
MAIN FUEL VALVE L2
START FUEL VALVE L1
BLEED VALVE
Z4
SPARK PLUG
IGNITION EXCITER 1GN
HOUR METER
M1
LOW OIL PRESSURE G2
HIGH OIL TEMP G3
TC1
TC2
START BYPASS VALVE L4
MAGNETIC PICKUP G1
J12
S20
FIRE DETECTOR
FUEL PUMP
B1
J2
S13
GENERATOR OVERHEAT
FUEL SHUT OFF VALVE
TSA
AFT FACE ENG BEAM FR. 20
EARTH #6
C3
ANALOGUE CONVERTER
Z5
J3
J11
J10
TB6
GND
SHEET 1
SHEET 2
25-8NA5-1083 SH 3
DWG ISS - 3
ART ID # HA00F9806534A

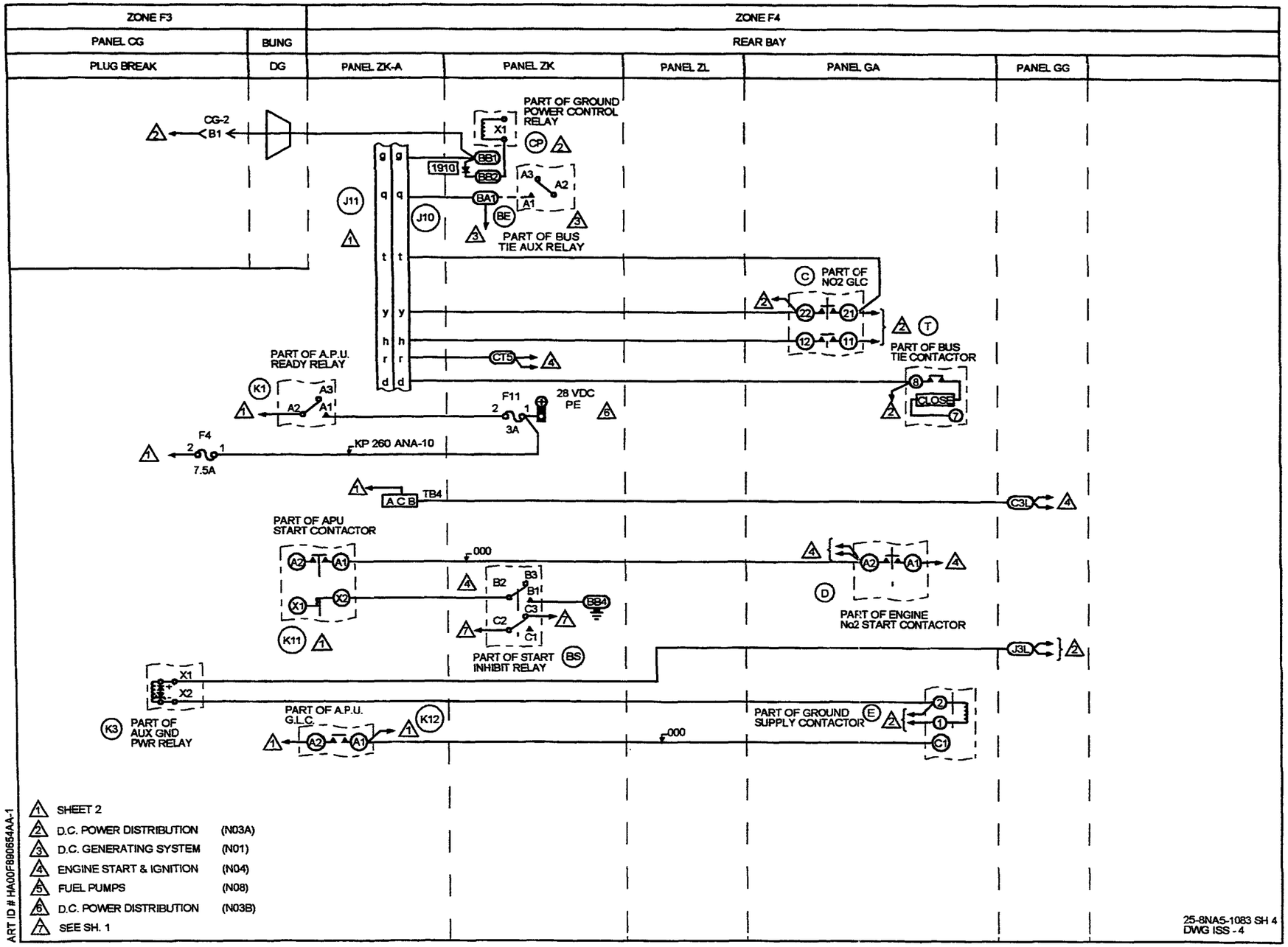
ZONE F3
ZONE F4
PANEL CG
BUNG
REAR BAY
PLUG BREAK
DG
PANEL ZK-A
PANEL ZK
PANEL ZL
PANEL GA
PANEL GG
CG-2
B1
PART OF GROUND POWER CONTROL RELAY
X1
CP
BB1
BB2
1910
A3
A2
A1
BA1
BE
J11
J10
PART OF BUS TIE AUX RELAY
PART OF NO2 GLC
C
22
21
12
11
T
PART OF BUS TIE CONTACTOR
8
CLOSE
7
CT5
PART OF A.P.U. READY RELAY
K1
F11
28 VDC PE
3A
F4
7.5A
KP 260 ANA-10
A C B
TB4
C3L
PART OF APU START CONTACTOR
000
B2
B3
B1
C3
C2
C1
BB4
X2
K11
PART OF START INHIBIT RELAY
BS
D
PART OF ENGINE No2 START CONTACTOR
J3L
K3
PART OF AUX GND PWR RELAY
PART OF A.P.U. G.L.C.
K12
PART OF GROUND SUPPLY CONTACTOR
E
C1
SHEET 2
D.C. POWER DISTRIBUTION (N03A)
D.C. GENERATING SYSTEM (N01)
ENGINE START & IGNITION (N04)
FUEL PUMPS (N08)
D.C. POWER DISTRIBUTION (N03B)
SEE SH. 1
ART ID # HA00F890654AA-1
25-8NA5-1083 SH 4
DWG ISS - 4

IDENT	PART NUMBER	1234567 NOMENCLATURE	EFFECT FROM TO	UNITS PER ASSY
		AUXILIARY POWER UNIT	177177 233233 235235 237237	
	25-8NA5-1083	WIRING DIAGRAM- (MOD 259890A) (MOD 25F505A)		RF
A	M300-1264	.RELAY- (VK6265) (USED WITH SOCKET: M12883-41-16 (V81349))		1
B	HWBUN1736S5B	.TERMINAL BLOCK- (VK0574) (USED WITH DIODE: 1N4005 (VK5519) OPT BYW54 (VK0004))		1
BA-ZK	HWBUN1146S10B	.TERMINAL BLOCK- (VK0574)		1
BB-ZK	HWBUN1146S10B	.TERMINAL BLOCK- (VK0574) (USED WITH DIODE: 1N4005 (VK5519) OPT BYW54 (VK0004))		1
BE-ZK	M300-1264	.RELAY- (VK6265) (USED WITH SOCKET: M12883-41-16 (V81349))		1
BS-ZK	M400-1265	.RELAY- (VK6265) (USED WITH SOCKET: M12883-40-19 (V81349))		1
B1	2B6-72	.FUEL PUMP- (V26433) (OPT (V1BU13))		1
B127-DAD	25-8NF2217-10	.CIRCUIT BREAKER-10AMP (ALTERED FROM 483-96TCK14-10A (VU0091))		1
B128-DAD	25-8NF2217-10	.CIRCUIT BREAKER-10AMP (ALTERED FROM 483-96TCK14-10A (VU0091))		1
		MISSING ITEM NO. NOT APPLICABLE		

– ITEM NOT ILLUSTRATED

IDENT	PART NUMBER	1234567 NOMENCLATURE	EFFECT FROM TO	UNITS PER ASSY
C-GA	A703ZS	.CONTACTOR- (V74063)		1
C-GG	HWBUN1146D10B	.TERMINAL BLOCK- (VK0574)		1
CB1-ZKA	483TCG11J5-3A	.CIRCUIT BREAKER-3AMP (VU0091)		1
CB2-ZKA	25-8NF2217-15	.CIRCUIT BREAKER-15AMP (ALTERED FROM 483-96TCK14-15A (VU0091))		1
CG2-P	MTC100YH2-009	.SHELL-PLUG (VK1010) (USED WITH WAFERS: TYPE A, MTC100KT2-1101 TYPE B, MTC100KT2-1102)		1
CG2-R	MTC100YH2-010	.SHELL-RECEPTACLE (VK1010) (USED WITH WAFERS: TYPE A, MTC100KT2-1103 TYPE B, MTC100KT2-1104)		1
CP-ZK	M300-1264	.RELAY- (VK6265) (USED WITH SOCKET: M12883-41-16 (V81349))		1
CR3-ZKA	BYX42-600	.DIODE- (VK0004)		1
CR4-ZKA	BYX42-600	.DIODE- (VK0004)		1
CR6-ZKA	BYX42-600	.DIODE- (VK0004)		1
CT-ZK	HWBUN1146S10B	.TERMINAL BLOCK- (VK0574)		1
D-GA	A703FSS	.CONTACTOR- (VK4358)		1
DA16-P	MTC100YH1-003	.SHELL-PLUG (VK1010) (USED WITH WAFERS: TYPE A, MTC100KT1-1101 TYPE B, MTC100KT1-1102)		1
DA16-R	MTC100YH1-004	.SHELL-RECEPTACLE (VK1010) (USED WITH WAFERS: TYPE A, MTC100KT1-1103 TYPE B, MTC100KT1-1104)		1
DA38-P	MTCR161-04P	.CONNECTOR-PIN (VK1010)		1
DA38-R	MTCR101-04S	.CONNECTOR-SOCKET (VK1010)		1
		MISSING ITEM NO. NOT APPLICABLE		

– ITEM NOT ILLUSTRATED

IDENT	PART NUMBER	1234567 NOMENCLATURE	EFFECT FROM TO	UNITS PER ASSY
DA39-P	MTCR161-04P	.CONNECTOR-PIN (VK1010)		1
DA39-R	MTCR101-04S	.CONNECTOR-SOCKET (VK1010)		1
DA4-P	MTC100YH2-009	.SHELL-PLUG (VK1010) (USED WITH WAFERS: TYPE A, MTC100KT2-1101 TYPE B, MTC100KT2-1102)		1
DA4-R	MTC100YH2-010	.SHELL-RECEPTACLE (VK1010) (USED WITH WAFERS: TYPE A, MTC100KT2-1103 TYPE B, MTC100KT2-1104)		1
DG	422255-8	.BUNG- (VK1793)		1
DH	422254-9	.BUNG- (VK1793)		1
E-GA	LDG150Y4	.CONTACTOR- (VK4358)		1
F1-ZKA	5920-99-0120076	.FUSE-5AMP (VK0657)		1
F11-ZK	5920-99-0120075	.FUSE-3AMP (VK0657)		1
F2-ZKA	5920-99-0120075	.FUSE-3AMP (VK0657)		1
F28-ZKA	5920-99-0120075	.FUSE-3AMP (VK0657)		1
F3-ZKA	5920-99-0120075	.FUSE-3AMP (VK0657)		1
F4-ZKA	5920-99-0120077	.FUSE-7.5AMP (VK0657)		1
F6-ZKA	5920-99-0120076	.FUSE-5AMP (VK0657)		1
F7-ZKA	L1330A325	.FUSE-325AMP (VU0154)		1
GD	23080-006	.GENERATOR ASSY- (V19527) (POST SB24-316)		1
G1-AB	MS3456L10SL4S	.CONNECTOR-MAGNETIC PICKUP (V96906)		1
G2-CAB	MS3450L10SL3S	.CONNECTOR-LOW PRESSURE GAUGE (V96906)		1
G3-AB	MS3108810SL4S	.CONNECTOR-HIGH OIL TEMP GAUGE (V96906)		1
IGN-BA	MS3455L10SL3S	.CONNECTOR-IGNITION EXCITER (V96906)		1
		MISSING ITEM NO. NOT APPLICABLE		

– ITEM NOT ILLUSTRATED

IDENT	PART NUMBER	1234567 NOMENCLATURE	EFFECT FROM TO	UNITS PER ASSY
J-GG	HWBUN1146D10B	.TERMINAL BLOCK- (VK0574)		1
J1	MS3476L16-26P	.CONNECTOR-RECEPTACLE (V96906)		1
J10-ZKA	MS3126E22-41P	.CONNECTOR-PLUG (V96906)		1
J11-ZKA	MS3120E22-41S	.CONNECTOR- (V71468) (OPT (VK0316))		1
J12-P	MS3100E10SL4P	.CONNECTOR-PLUG (V96906)		1
J12-R	MS3100E10SL4S	.CONNECTOR- (V96906)		1
J2	MS3476L14-19S	.CONNECTOR- (V96906) (USED WITH BACKSHELL: MS1417-14N)		1
J3	MS34676-12-10S	.CONNECTOR- (V96906) (USED WITH BACKSHELL: MS1417-12N)		1
J4	MS3120F22-41P	.CONNECTOR- (V96906)		1
J5-DE	RR06E16-99SN059	.CONNECTOR-APU CABLE LOOM (VK1793)		1
J7-DE	RR06E16-99SX059	.CONNECTOR-APU CABLE LOOM (VK1793)		1
J9	MS3126E22-41S	.CONNECTOR- (V96906)		1
K1-ZKA	M400-1265	.RELAY- (VK6265) (USED WITH SOCKET: M12883-40-19 (V81349))		1
K10-ZKA	M302D4L	.RELAY- (VK6265) (USED WITH BASE: S302D1B0)		1
K11-ZKA	A703FSS	.CONTACTOR- (V74063)		1
K12-ZKA	A703GS	.CONTACTOR- (V74063) (POST SB49-3254)		1
K3-ZKA	M300-1264	.RELAY- (VK6265) (USED WITH SOCKET: M12883-41-16 (V81349))		1
		MISSING ITEM NO. NOT APPLICABLE		

– ITEM NOT ILLUSTRATED

IDENT	PART NUMBER	1234567 NOMENCLATURE	EFFECT FROM TO	UNITS PER ASSY
K5-ZKA	M300-1264	.RELAY- (VK6265) (USED WITH SOCKET: M12883-41-16 (V81349))		1
K6-ZKA	M300-1264	.RELAY- (VK6265) (USED WITH SOCKET: M12883-41-16 (V81349))		1
K7-ZKA	M300-1264	.RELAY- (VK6265) (USED WITH SOCKET: M12883-41-16 (V81349))		1
K8-ZKA	M300-1264	.RELAY- (VK6265) (USED WITH SOCKET: M12883-41-16 (V81349))		1
L-GG	HWBUN1146D10B	.TERMINAL BLOCK- (VK0574)		1
LG-DE	6240-99-9959182	.FILAMENT- (POSITIONS: LG1,LG2,LG3,LG4,LG5,LG6, LG7,LG8,LG9,LG10,LG11, LG12,LG13,LG14,LG15, LG16,LG17,LG18) (VK0690)		18
L1-AB	MS3456L10SL4S	.CONNECTOR-START FUEL VALVE (V96906)		1
L2-BA	MS3456L10SL3S	.CONNECTOR-MAIN FUEL VALVE (V96906)		1
L3-AB	MS3456L10SL4S	.CONNECTOR-MAIN FUEL VALVE (V96906)		1
L4-AB	MS3456L10SL4S	.CONNECTOR-START BYPASS VALVE (V96906)		1
M1	169096-1	.HOUR METER- (V13555)		1
M2-DE	BE2315ABCD	.EGT METER- (V1BU13)		1
M3-DE	BE2321ABCD	.RPM INDICATOR- (V1BU13)		1
M4-DE	BE185129ECXX	.AMMETER- (V1BU13)		1
P8	MS3106E24-28S	.CONNECTOR-GENERATOR CONTROLLER (V96906)		1
		MISSING ITEM NO. NOT APPLICABLE		

– ITEM NOT ILLUSTRATED

IDENT	PART NUMBER	1234567 NOMENCLATURE	EFFECT FROM TO	UNITS PER ASSY
R1-ZKA	2909-2015	.SHUNT- (VK0100)		1
SQ	HWBUN1146D10B	.TERMINAL BLOCK- (VK0574)		1
SR	HWBUN1146D10B	.TERMINAL BLOCK- (VK0574)		1
S1-DE	23AT74T2	.SWITCH- (V91929) (OPT (VK6596))		1
S1-ZKA	WC1503	.SWITCH- (VK0653)		1
S12	17343-62-500	.SWITCH-FIRE DETECTOR (V15801)		1
S13	67100-1-32-350	.SWITCH-GENERATOR OVERHEAT (V15801)		1
S2-DE	2PB732T2	.SWITCH- (V91929) (OPT (VK6596))		1
S20	17343-62-500	.SWITCH-FIRE DETECTOR (V15801)		1
S21	17343-62-500	.SWITCH-FIRE DETECTOR (V15801)		1
S3-DE	23AT73T2	.SWITCH- (V91929) (OPT (VK6596))		1
S4-DE	2PB732T2	.SWITCH- (V91929) (OPT (VK6596))		1
S5-DE	2PB717T2	.SWITCH- (V91929) (OPT (VK6596))		1
S6-DE	23AT73T2	.SWITCH- (V91929) (OPT (VK6596))		1
S7-DE	4TL1-70	.SWITCH- (VK0653)		1
S8-DE	2PB732T2	.SWITCH- (V91929) (OPT (VK6596))		1
T-GA	LDA150A8	.CONTACTOR- (VK4358)		1
TB1-ZKA	MRTB20E04-111	.TERMINAL JUNCTION MODULE- (V14283)		1
TB2-ZKA	MRTB20E04-111	.TERMINAL JUNCTION MODULE- (V14283)		1
TB3-ZKA	MRTB20E57-111	.TERMINAL JUNCTION MODULE- (V14283)		1
TB301	HWBUN1146S10B	.TERMINAL BLOCK- (VK0574)		1
		MISSING ITEM NO. NOT APPLICABLE		

– ITEM NOT ILLUSTRATED

IDENT	PART NUMBER	1234567 NOMENCLATURE	EFFECT FROM TO	UNITS PER ASSY
TB301-1-4	104026-1	.START EVENT COUNTER- (V55820)		1
TB301A	HWB1146S3B	.TERMINAL BLOCK- (VK0574)		1
TB4-ZKA	MRTB20E57-111	.TERMINAL JUNCTION MODULE- (V14283)		1
TB6-ZKA	MRTB16E03-111	.TERMINAL JUNCTION MODULE- (V14283)		1
TC1	160021-3	.THERMOCOUPLE- (V55820)		1
TC2	160021-3	.THERMOCOUPLE- (V55820)		1
TD	MS27212-1	.TERMINAL BLOCK- (V96906)		1
TSA	FGBA24	.FUEL SHUT OFF VALVE- (VK0686)		1
Z1	164540-700	.SEQUENCE UNIT- (V55820)		1
Z2	51509-006C	.CONTROL UNIT- (UNIT EXCHANGE ITEM) (V09455) (PRE MOD 253159A) (FOR SPARES PROCURE 51539-006H)		1
Z2	51539-006H	.CONTROL UNIT- (UNIT EXCHANGE ITEM) (V09455) (MOD 253159A)		1
Z3	30402104	.FIRE BOTTLE- (UNIT EXCHANGE ITEM) (V05167)		1
Z4	160290-100	.BLEED VALVE- (V55820)		1
Z5	160240-400	.ANALOG CONVERTER- (VK7391)		1
1-AB-DE	BYW54	.DIODE- (VK0004)		1
1-BC-DE	BYW54	.DIODE- (VK0004)		1
2-AB-DE	BYW54	.DIODE- (VK0004)		1
2-BC-DE	BYW54	.DIODE- (VK0004)		1
3-AB-DE	BYW54	.DIODE- (VK0004)		1
3-BC-DE	BYW54	.DIODE- (VK0004)		1
4-AB-DE	BYW54	.DIODE- (VK0004)		1
		MISSING ITEM NO. NOT APPLICABLE		

– ITEM NOT ILLUSTRATED

IDENT	PART NUMBER	1234567 NOMENCLATURE	EFFECT FROM TO	UNITS PER ASSY
4-BC-DE	BYW54	.DIODE- (VK0004)		1
5-AB-DE	BYW54	.DIODE- (VK0004)		1
5-BC-DE	BYW54	.DIODE- (VK0004)		1
6-AB-DE	BYW54	.DIODE- (VK0004)		1
		MISSING ITEM NO. NOT APPLICABLE		

– ITEM NOT ILLUSTRATED

CHAPTER 52

DOORS

CHAPTER 52 - DOORS

TABLE OF CONTENTS

SUBJECT	CHAPTER SECTION UNIT	FIGURE	EFFECT
DOOR WARNING	52-70-00		
PRESSURE DOOR UNLOCKED WARNING	52-70-10	2	091276

CH-SECT-UNIT-FIG	PAGE NO.	DATE
*52	1	AUG 31/03
52-70-00	1	MAY 31/02
52-70-10- 2	0	MAY 31/02
52-70-10- 2	1	MAY 31/02
52-70-10- 2	2	MAY 31/02

CH-SECT-UNIT-FIG	PAGE NO.	DATE

*THE ASTERISK INDICATES PAGES CHANGED OR ADDED BY THE CURRENT REVISION

DOOR WARNING

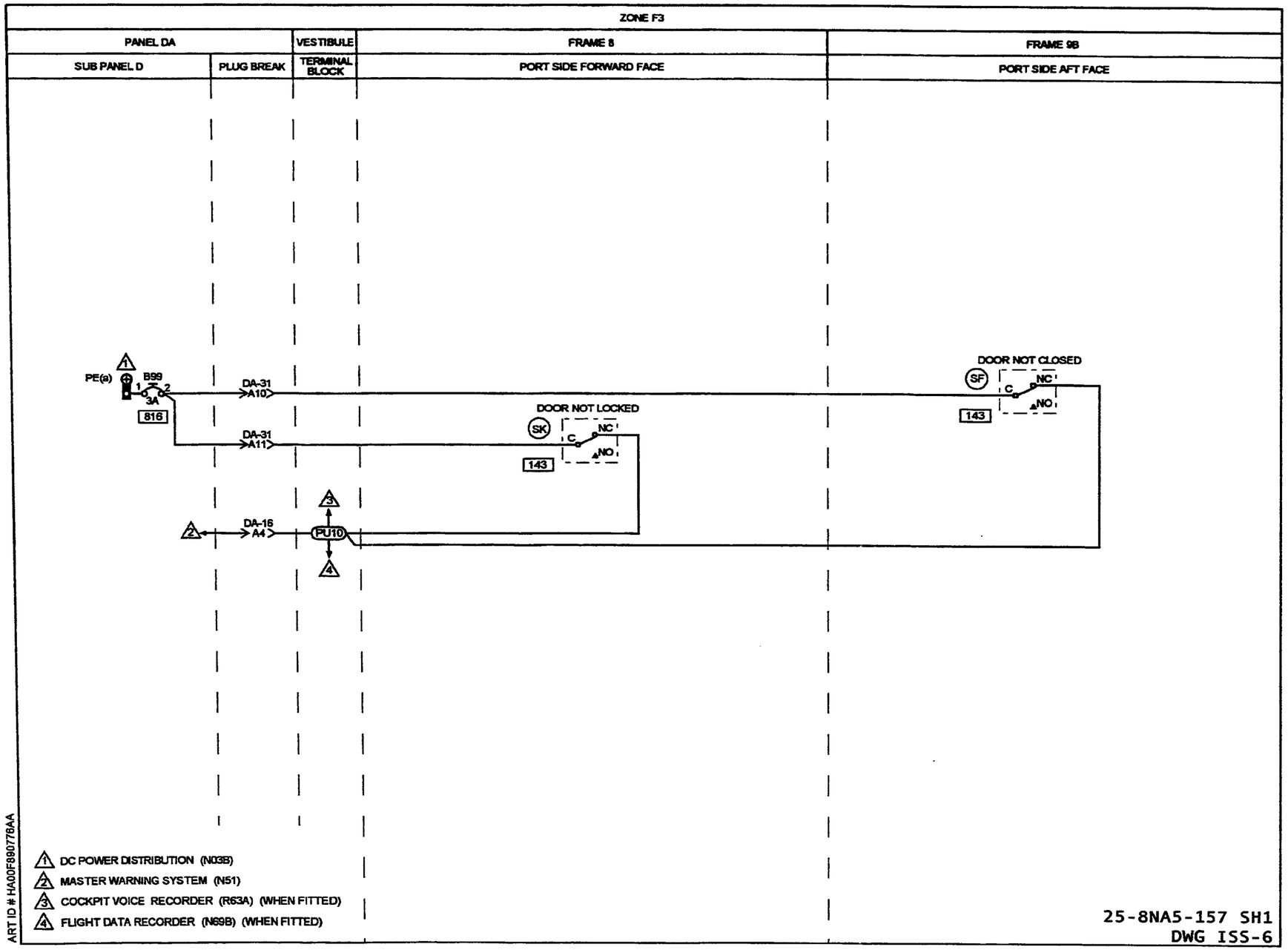
ZONE F3
PANEL DA
VESTIBULE
FRAME 8
FRAME 9B
SUB PANEL D
PLUG BREAK
TERMINAL BLOCK
PORT SIDE FORWARD FACE
PORT SIDE AFT FACE
PE(a)
B99
3A
816
DA-31
A10
DA-31
A11
DA-16
A4
PU10
DOOR NOT LOCKED
SK
C
NC
NO
143
DOOR NOT CLOSED
SF
C
NC
NO
143
DC POWER DISTRIBUTION (N03B)
MASTER WARNING SYSTEM (N51)
COCKPIT VOICE RECORDER (R63A) (WHEN FITTED)
FLIGHT DATA RECORDER (N69B) (WHEN FITTED)
ART ID # HA00F890778AA
25-8NA5-157 SH1
DWG ISS-6

IDENT	PART NUMBER	1234567 NOMENCLATURE	EFFECT FROM TO	UNITS PER ASSY
		PRESSURE DOOR UNLOCKED WARNING	091276	
	25-8NA5-157	WIRING DIAGRAM- (MOD 253149C) (MOD 25F505A)		RF
B99-DAD	483TCG11J25-3A	.CIRCUIT BREAKER-3AMP (VU0091)		1
DA16-P	MTC100YH1-003	.SHELL-PLUG (VK1010) (USED WITH WAFERS: TYPE A, MTC100KT1-1101 TYPE B, MTC100KT1-1102)	091254	1
DA16-P	MTC100YH1-003	.SHELL-PLUG (VK1010) (USED WITH INSERT: MTC100YC1-005)	255276	1
DA16-R	MTC100YH1-004	.SHELL-RECEPTACLE (VK1010) (USED WITH WAFERS: TYPE A, MTC100KT1-1103 TYPE B, MTC100KT1-1104)	091254	1
DA16-R	MTC100YH1-004	.SHELL-RECEPTACLE (VK1010) (USED WITH INSERT: MTC100YC1-006)	255276	1
DA31-P	MTC100YH2-009	.SHELL-PLUG (VK1010) (USED WITH WAFERS: TYPE A, MTC100KT2-1101 TYPE B, MTC100KT2-1102)	091254	1
DA31-P	MTC100YH2-009	.SHELL-PLUG (VK1010) (USED WITH INSERTS: PRIMARY MTC100YC1-001 SECONDARY MTC100YC1-002)	255276	1
DA31-R	MTC100YH2-010	.SHELL-RECEPTACLE (VK1010) (USED WITH WAFERS: TYPE A, MTC100KT2-1103 TYPE B, MTC100KT2-1104)	091254	1
DA31-R	MTC100YH2-010	.SHELL-RECEPTACLE (VK1010) (USED WITH INSERTS: PRIMARY MTC100YC1-003 SECONDARY MTC100YC1-004)	255276	1
PU	HWBUN1146S10B	.TERMINAL BLOCK- (VK0574)		1
SF	BZ2RQ1T04	.SWITCH- (VK6596)		1
		MISSING ITEM NO. NOT APPLICABLE		

– ITEM NOT ILLUSTRATED

IDENT	PART NUMBER	1234567 NOMENCLATURE	EFFECT FROM TO	UNITS PER ASSY
SK	BZ2RQ1T04	.SWITCH- (VK6596)		1
		MISSING ITEM NO. NOT APPLICABLE		

– ITEM NOT ILLUSTRATED

CHAPTER

73

ENGINE FUEL AND CONTROL

CHAPTER 73 - ENGINE FUEL AND CONTROL

TABLE OF CONTENTS

SUBJECT	CHAPTER SECTION UNIT	FIGURE	EFFECT
CONTROLLING	73-20-00		
ENGINE IDLE SPEED CONTROL	73-20-10	3	091276
NO.1 FUEL COMPUTER (DIGITAL)	73-20-01	5	091276
NO.2 FUEL COMPUTER	73-20-02	5	091276

CH-SECT-UNIT-FIG	PAGE NO.	DATE	CH-SECT-UNIT-FIG	PAGE NO.	DATE
*73	1	AUG 31/03			
73-20-00	1	MAY 31/02			
73-20-01- 5	0	NOV 30/02			
73-20-01- 5	0A	NOV 30/02			
73-20-01- 5	1	MAY 31/02			
73-20-01- 5	2	MAY 31/02			
73-20-01- 5	3	MAY 31/02			
73-20-01- 5	4	MAY 31/02			
73-20-02- 5	0	NOV 30/02			
73-20-02- 5	0A	NOV 30/02			
73-20-02- 5	0B	NOV 30/02			
73-20-02- 5	1	MAY 31/02			
73-20-02- 5	2	MAY 31/02			
73-20-02- 5	3	MAY 31/02			
73-20-02- 5	4	MAY 31/02			
73-20-10- 3	0	NOV 30/02			
73-20-10- 3	1	MAY 31/02			
73-20-10- 3	2	MAY 31/02			
73-20-10- 3	3	MAY 31/02			
73-20-10- 3	4	MAY 31/02			
73-20-10- 3	5	MAY 31/02			

*THE ASTERISK INDICATES PAGES CHANGED OR ADDED BY THE CURRENT REVISION

CONTROLLING

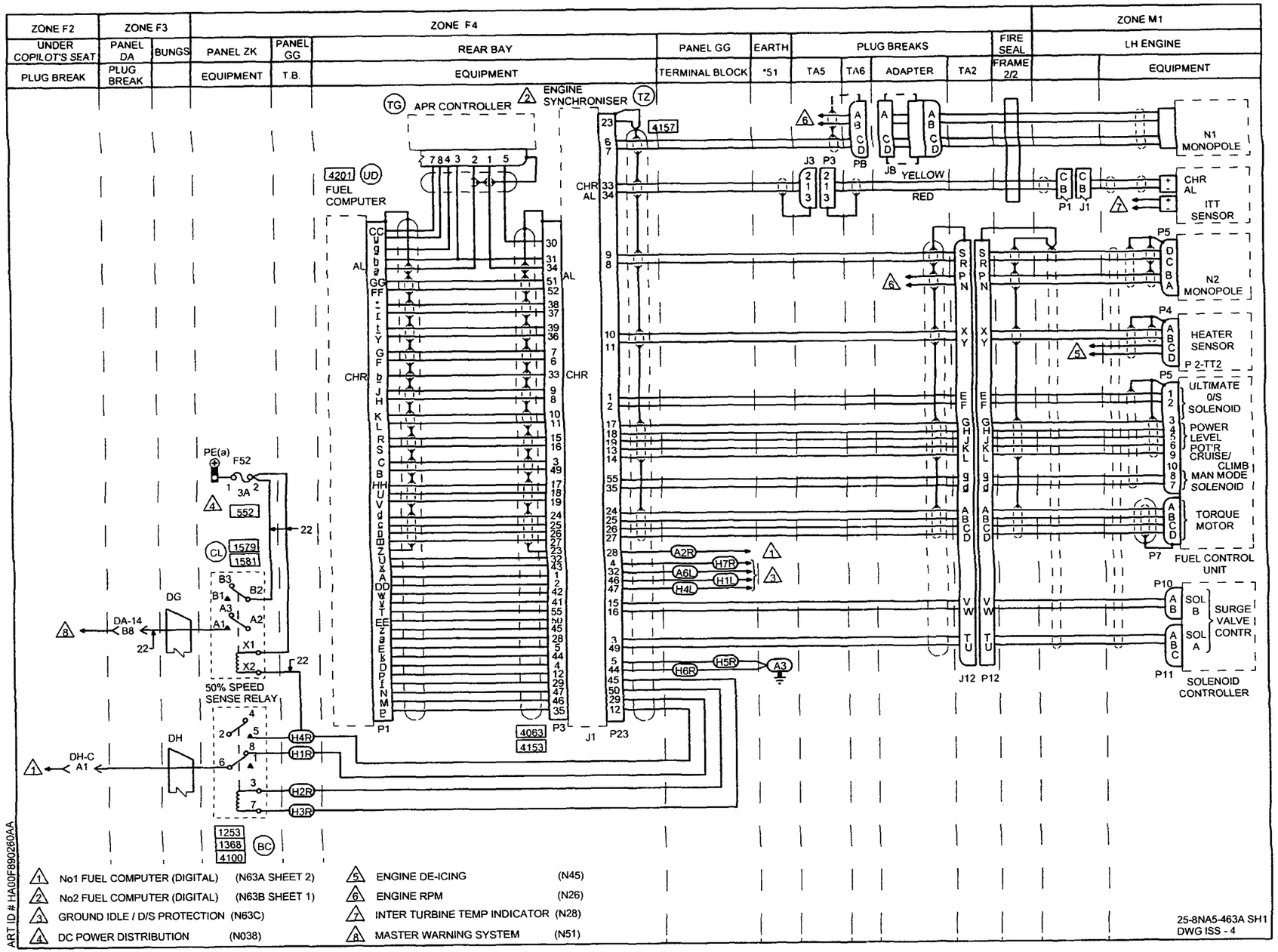
ZONE F2
ZONE F3
ZONE F4
ZONE M1
UNDER COPILOT'S SEAT
PANEL DA
BUNGS
PANEL ZK
PANEL GG
REAR BAY
PANEL GG
EARTH
PLUG BREAKS
FIRE SEAL
LH ENGINE
PLUG BREAK
PLUG BREAK
EQUIPMENT
T.B.
EQUIPMENT
TERMINAL BLOCK
*51
TA5
TA6
ADAPTER
TA2
FRAME 2/2
EQUIPMENT
APR CONTROLLER
ENGINE SYNCHRONISER
FUEL COMPUTER
N1 MONOPOLE
CHR AL
ITT SENSOR
N2 MONOPOLE
HEATER SENSOR
P 2-TT2
ULTIMATE O/S SOLENOID
POWER LEVEL POT'R CRUISE/ CLIMB MAN MODE SOLENOID
TORQUE MOTOR
FUEL CONTROL UNIT
SURGE VALVE CONTR
SOLENOID CONTROLLER
YELLOW
RED
50% SPEED SENSE RELAY
DA-14 B8
DH-C A1
PE(a)
F52
3A
552
1579
1581
4201
4157
4063
4153
1253
1368
4100
1 No1 FUEL COMPUTER (DIGITAL) (N63A SHEET 2)
2 No2 FUEL COMPUTER (DIGITAL) (N63B SHEET 1)
3 GROUND IDLE / D/S PROTECTION (N63C)
4 DC POWER DISTRIBUTION (N038)
5 ENGINE DE-ICING (N45)
6 ENGINE RPM (N26)
7 INTER TURBINE TEMP INDICATOR (N28)
8 MASTER WARNING SYSTEM (N51)
25-8NA5-463A SH1
DWG ISS - 4
ART ID # HA00F8902604A

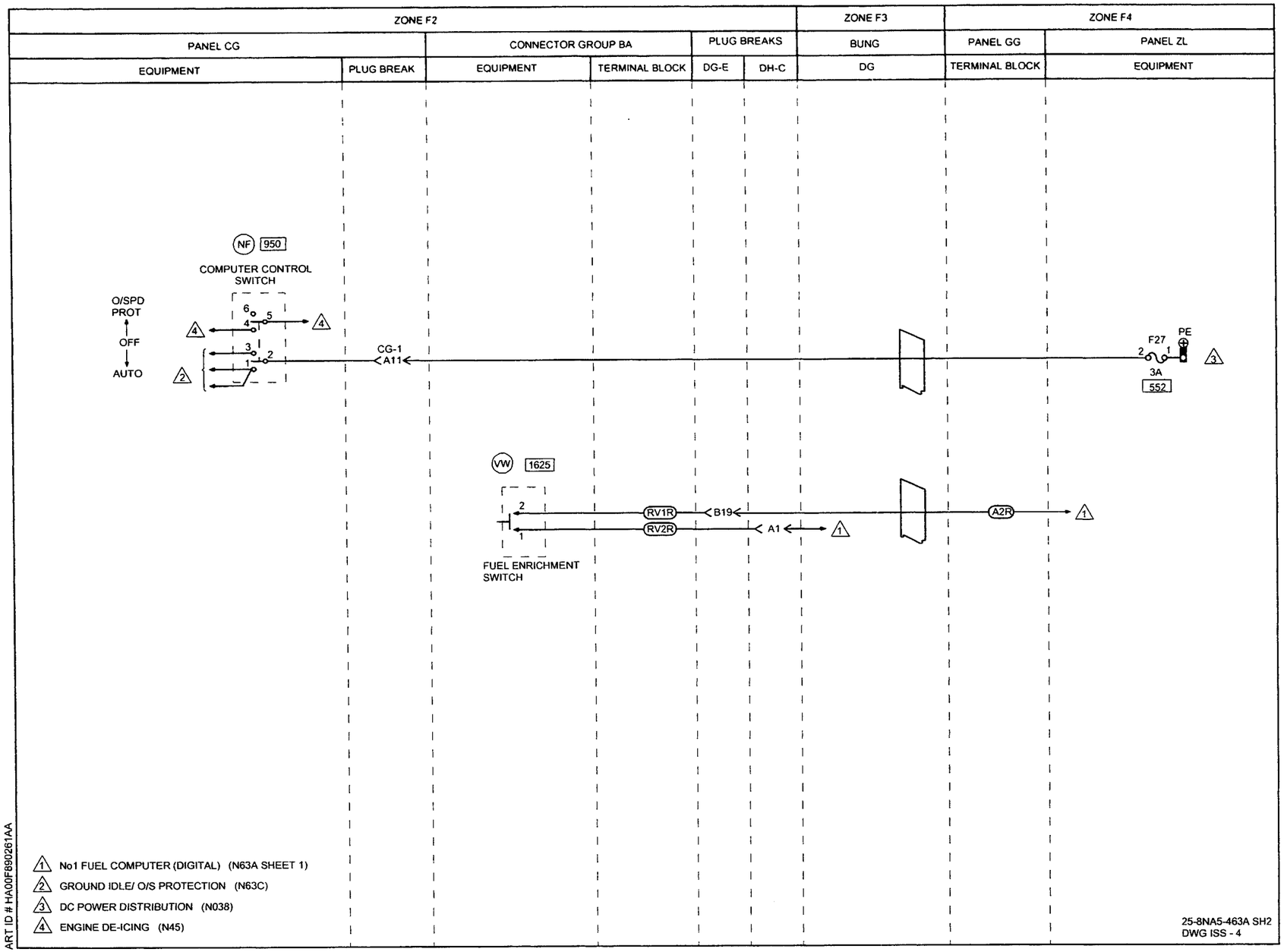
ZONE F2
ZONE F3
ZONE F4
PANEL CG
CONNECTOR GROUP BA
PLUG BREAKS
BUNG
PANEL GG
PANEL ZL
EQUIPMENT
PLUG BREAK
EQUIPMENT
TERMINAL BLOCK
DG-E
DH-C
DG
TERMINAL BLOCK
EQUIPMENT
NF 950
COMPUTER CONTROL SWITCH
O/SPD PROT
OFF
AUTO
CG-1
A11
F27
PE
3A
552
VW 1625
RV1R
RV2R
B19
A1
A2R
FUEL ENRICHMENT SWITCH
1 No1 FUEL COMPUTER (DIGITAL) (N63A SHEET 1)
2 GROUND IDLE/ O/S PROTECTION (N63C)
3 DC POWER DISTRIBUTION (N038)
4 ENGINE DE-ICING (N45)
25-8NA5-463A SH2
DWG ISS - 4
ART ID # HA00F890261AA

IDENT	PART NUMBER	1234567 NOMENCLATURE	EFFECT FROM TO	UNITS PER ASSY
		NO.1 FUEL COMPUTER (DIGITAL)	091276	
	25-8NA5-463A	WIRING DIAGRAM- (MOD 253149C)		1
A-GG	HWBUN1146D10B	.TERMINAL BLOCK- (VK0574)		1
BC-ZK	HDS8SF3J03	.RELAY- (VK1793) (USED WITH SOCKET: RSE120074 (V58982))		1
CG1-P	MTC100YH2-009	.SHELL-PLUG (VK1010) (USED WITH WAFERS: TYPE A, MTC100KT2-1101 TYPE B, MTC100KT2-1102)	091254	1
CG1-P	MTC100YH2-009	.SHELL-PLUG (VK1010) (USED WITH INSERTS: PRIMARY MTC100YC1-001 SECONDARY MTC100YC1-002)	255276	1
CG1-R	MTC100YH2-010	.SHELL-RECEPTACLE (VK1010) (USED WITH WAFERS: TYPE A, MTC100KT2-1103 TYPE B, MTC100KT2-1104)	091254	1
CG1-R	MTC100YH2-010	.SHELL-RECEPTACLE (VK1010) (USED WITH INSERTS: PRIMARY MTC100YC1-003 SECONDARY MTC100YC1-004)	255276	1
CL-ZK	M300-1264	.RELAY- (VK6265) (USED WITH SOCKET: M12883-41-16 (V81349))		1
DA14-P	MTC100YH1-003	.SHELL-PLUG (VK1010) (USED WITH WAFERS: TYPE A, MTC100KT1-1101 TYPE B, MTC100KTI-1102)	091254	1
DA14-P	MTC100YH1-003	.SHELL-PLUG (VK1010) (USED WITH INSERT: MTC100YC1-005)	255276	1
DA14-R	MTC100YH1-004	.SHELL-RECEPTACLE (VK1010) (USED WITH WAFERS; TYPE A, MTC100KT1-1103 TYPE B, MTC100KTI-1104)	091254	1
		MISSING ITEM NO. NOT APPLICABLE		

– ITEM NOT ILLUSTRATED

IDENT	PART NUMBER	1234567 NOMENCLATURE	EFFECT FROM TO	UNITS PER ASSY
DA14-R	MTC100YH1-004	.SHELL-RECEPTACLE (VK1010) (USED WITH INSERT: MTC100YC1-006)	255276	1
DG	422255-8	.BUNG- (VK1793)		1
DGE-P	MTC100YH2-009	.SHELL-PLUG (VK1010) (USED WITH WAFERS: TYPE A, MTC100KT2-1103 TYPE B, MTC100KT2-1104)	091254	1
DGE-P	MTC100YH2-009	.SHELL-PLUG (VK1010) (USED WITH INSERTS: PRIMARY MTC100YC1-003 SECONDARY MTC100YC1-004)	255276	1
DGE-R	MTC100YH2-010	.SHELL-RECEPTACLE (VK1010) (USED WITH WAFERS: TYPE A, MTC100KT2-1101 TYPE B, MTC100KT2-1102)	091254	1
DGE-R	MTC100YH2-010	.SHELL-RECEPTACLE (VK1010) (USED WITH INSERTS: PRIMARY MTC100YC1-001 SECONDARY MTC100YC1-002)	255276	1
DH	422254-9	.BUNG- (VK1793)		1
DHC-P	MTC100YH1-003	.SHELL-PLUG (VK1010) (USED WITH WAFERS: TYPE A, MTC100KT1-1101 TYPE B, MTC100KTI-1102)	091254	1
DHC-P	MTC100YH1-003	.SHELL-PLUG (VK1010) (USED WITH INSERT: MTC100YC1-005)	255276	1
DHC-R	MTC100YH1-004	.SHELL-RECEPTACLE (VK1010) (USED WITH WAFERS; TYPE A, MTC100KT1-1103 TYPE B, MTC100KTI-1104)	091254	1
DHC-R	MTC100YH1-004	.SHELL-RECEPTACLE (VK1010) (USED WITH INSERT: MTC100YC1-006)	255276	1
F27-ZL	5920-99-0120075	.FUSE-3AMP (VK0657)		1
F52-ZK	5920-99-0120075	.FUSE-3AMP (VK0657)		1
		MISSING ITEM NO. NOT APPLICABLE		

– ITEM NOT ILLUSTRATED

IDENT	PART NUMBER	1234567 NOMENCLATURE	EFFECT FROM TO	UNITS PER ASSY
H-GG	HWBUN1146D10B	.TERMINAL BLOCK- (VK0574)		1
J12-TA2	3074256-3	.HARNESS-COMPUTER LH ENGINE (V7X000) (FOR SPARES SEE VENDORS COMPONENT MAINTENANCE MANUAL) (CMM 76-10-02)		1
J3-TA5	3074256-3	.HARNESS-COMPUTER LH ENGINE (V7X000) (FOR SPARES SEE VENDORS COMPONENT MAINTENANCE MANUAL) (CMM 76-10-02)		1
J8-ADAPTO	3074256-3	.HARNESS-COMPUTER LH ENGINE (V7X000) (FOR SPARES SEE VENDORS COMPONENT MAINTENANCE MANUAL) (CMM 76-10-02)		1
NF-CG	2TP1-1	.SWITCH- (V91929) (OPT (VK6596))	091116	1
NF-CG	2TP1-1M	.SWITCH- (V91929) (OPT (VK6596))	117276	1
P1-TG	2113211-1	.HARNESS-NO.1,FUEL COMPUTER AND A.P.R. (V70210)		1
P1-UD	2113211-1	.HARNESS-NO.1,FUEL COMPUTER AND A.P.R. (V70210)		1
P12-TA2	3074256-3	.HARNESS-COMPUTER LH ENGINE (V7X000) (FOR SPARES SEE VENDORS COMPONENT MAINTENANCE MANUAL) (CMM 76-10-02)		1
P23-TZ	3074256-3	.HARNESS-COMPUTER LH ENGINE (V7X000) (FOR SPARES SEE VENDORS COMPONENT MAINTENANCE MANUAL) (CMM 76-10-02)		1
		MISSING ITEM NO. NOT APPLICABLE		

– ITEM NOT ILLUSTRATED

IDENT	PART NUMBER	1 2 3 4 5 6 7 NOMENCLATURE	EFFECT FROM TO	UNITS PER ASSY
P3-TA5	3074256-3	.HARNESS-COMPUTER LH ENGINE (V7X000) (FOR SPARES SEE VENDORS COMPONENT MAINTENANCE MANUAL) (CMM 76-10-02)		1
P3-TZ	2113211-1	.HARNESS-NO.1,FUEL COMPUTER AND A.P.R. (V70210)		1
P8-TA6	3074256-3	.HARNESS-COMPUTER LH ENGINE (V7X000) (FOR SPARES SEE VENDORS COMPONENT MAINTENANCE MANUAL) (CMM 76-10-02)		1
RV-BA	HWBUN1146D5B	.TERMINAL BLOCK- (VK0574)		1
TG	2101822-1	.CONTROL UNIT-A.P.R. (V99193)		1
TZ	2118114-1-2	.SYNCHRONISER-ENGINE (V70210)		1
UD	2118002-6	.COMPUTER-FUEL (V99193)		1
VW-BA	B9021BB	.SWITCH- (V09298)		1
		MISSING ITEM NO. NOT APPLICABLE		

– ITEM NOT ILLUSTRATED

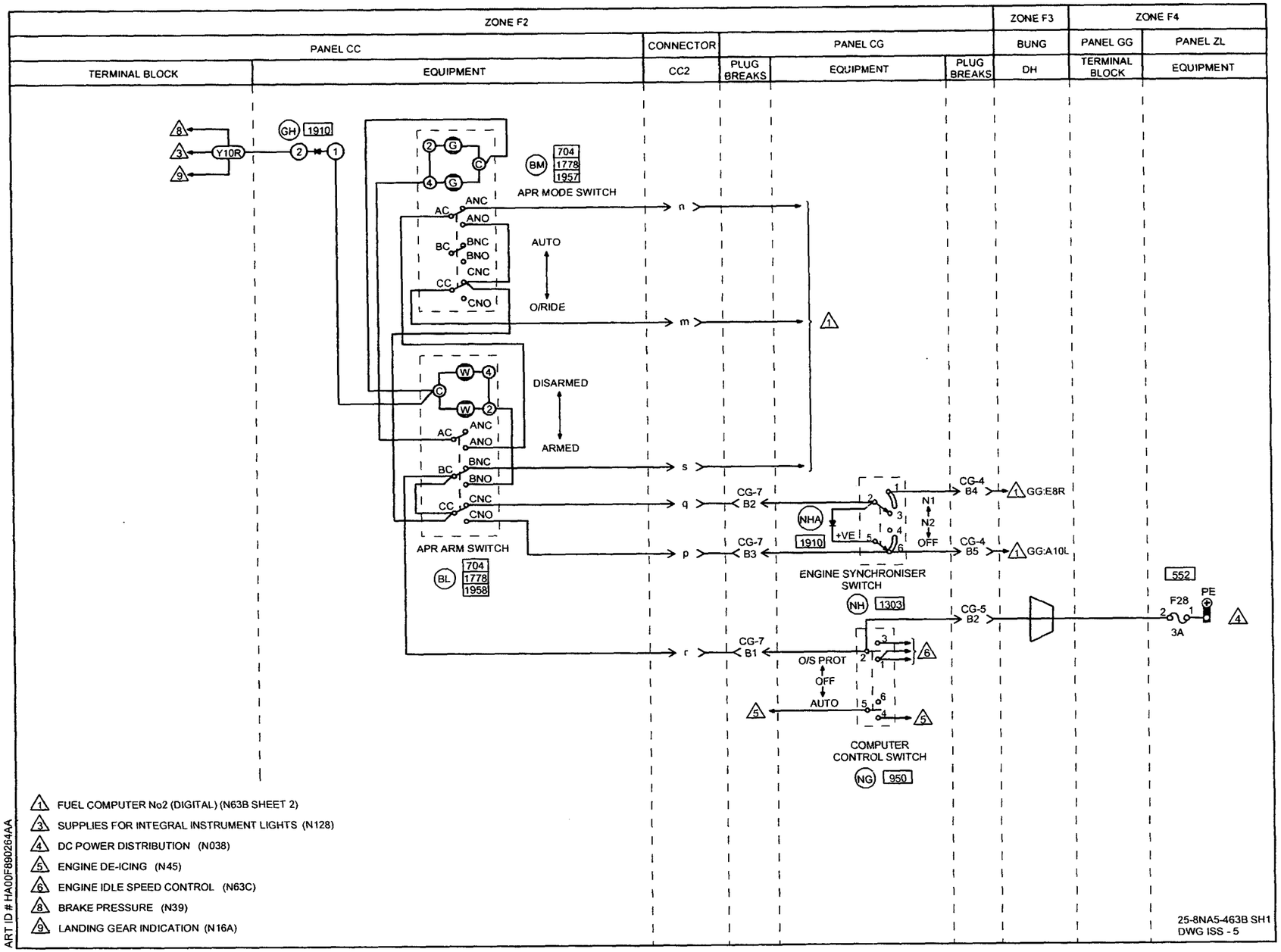
ZONE F2
ZONE F3
ZONE F4
PANEL CC
CONNECTOR
PANEL CG
BUNG
PANEL GG
PANEL ZL
TERMINAL BLOCK
EQUIPMENT
CC2
PLUG BREAKS
EQUIPMENT
PLUG BREAKS
DH
TERMINAL BLOCK
EQUIPMENT
Y10R
GH 1910
BM 704 1778 1957
APR MODE SWITCH
ANC
ANO
AC
BC
BNC
BNO
CC
CNC
CNO
AUTO
O/RIDE
DISARMED
ARMED
APR ARM SWITCH
BL 704 1778 1958
n
m
s
q
p
r
CG-7 B2
CG-7 B3
CG-7 B1
NHA
1910
+VE
N1
N2
OFF
CG-4 B4
CG-4 B5
GG:E8R
GG:A10L
ENGINE SYNCHRONISER SWITCH
NH 1303
CG-5 B2
552
F28
3A
PE
O/S PROT
OFF
AUTO
COMPUTER CONTROL SWITCH
NG 950
FUEL COMPUTER No2 (DIGITAL) (N63B SHEET 2)
SUPPLIES FOR INTEGRAL INSTRUMENT LIGHTS (N128)
DC POWER DISTRIBUTION (N038)
ENGINE DE-ICING (N45)
ENGINE IDLE SPEED CONTROL (N63C)
BRAKE PRESSURE (N39)
LANDING GEAR INDICATION (N16A)
25-8NA5-463B SH1
DWG ISS - 5
ART ID # HA00F890264AA

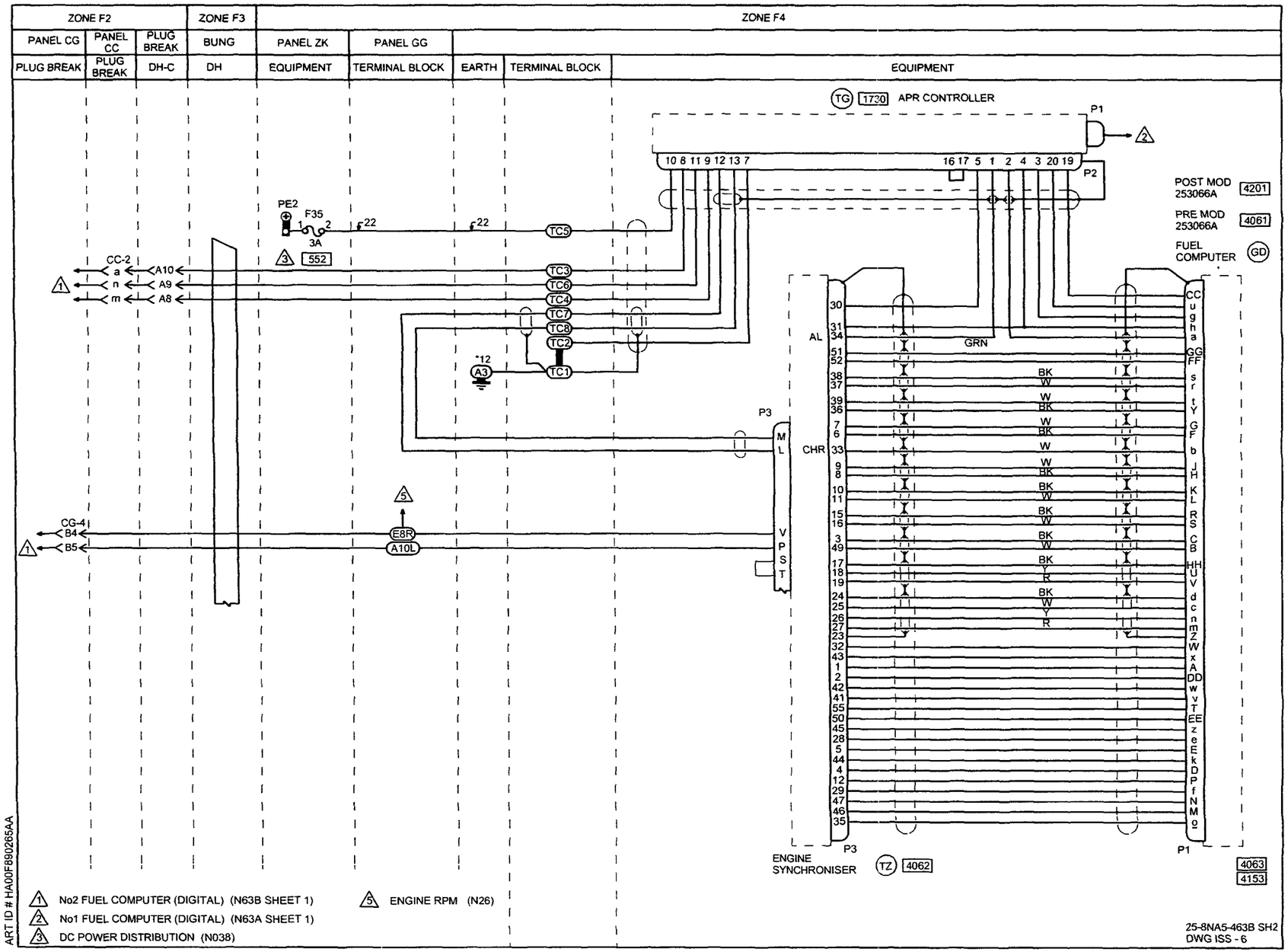
ZONE F2
ZONE F3
ZONE F4
PANEL CG
PANEL CC
PLUG BREAK
BUNG
PANEL ZK
PANEL GG
PLUG BREAK
PLUG BREAK
DH-C
DH
EQUIPMENT
TERMINAL BLOCK
EARTH
TERMINAL BLOCK
EQUIPMENT
TG 1730 APR CONTROLLER
P1
P2
POST MOD 253066A 4201
PRE MOD 253066A 4061
FUEL COMPUTER GD
PE2
F35
3A
552
CC-2
A10
A9
A8
TC5
TC3
TC6
TC4
TC7
TC8
TC2
TC1
A3
P3
CG-4
B4
B5
E8R
A10L
AL
CHR
GRN
BK
W
Y
R
ENGINE SYNCHRONISER TZ 4062
4063
4153
ART ID # HA00F890265AA
No2 FUEL COMPUTER (DIGITAL) (N63B SHEET 1)
No1 FUEL COMPUTER (DIGITAL) (N63A SHEET 1)
DC POWER DISTRIBUTION (N038)
ENGINE RPM (N26)
25-8NA5-463B SH2
DWG ISS - 6

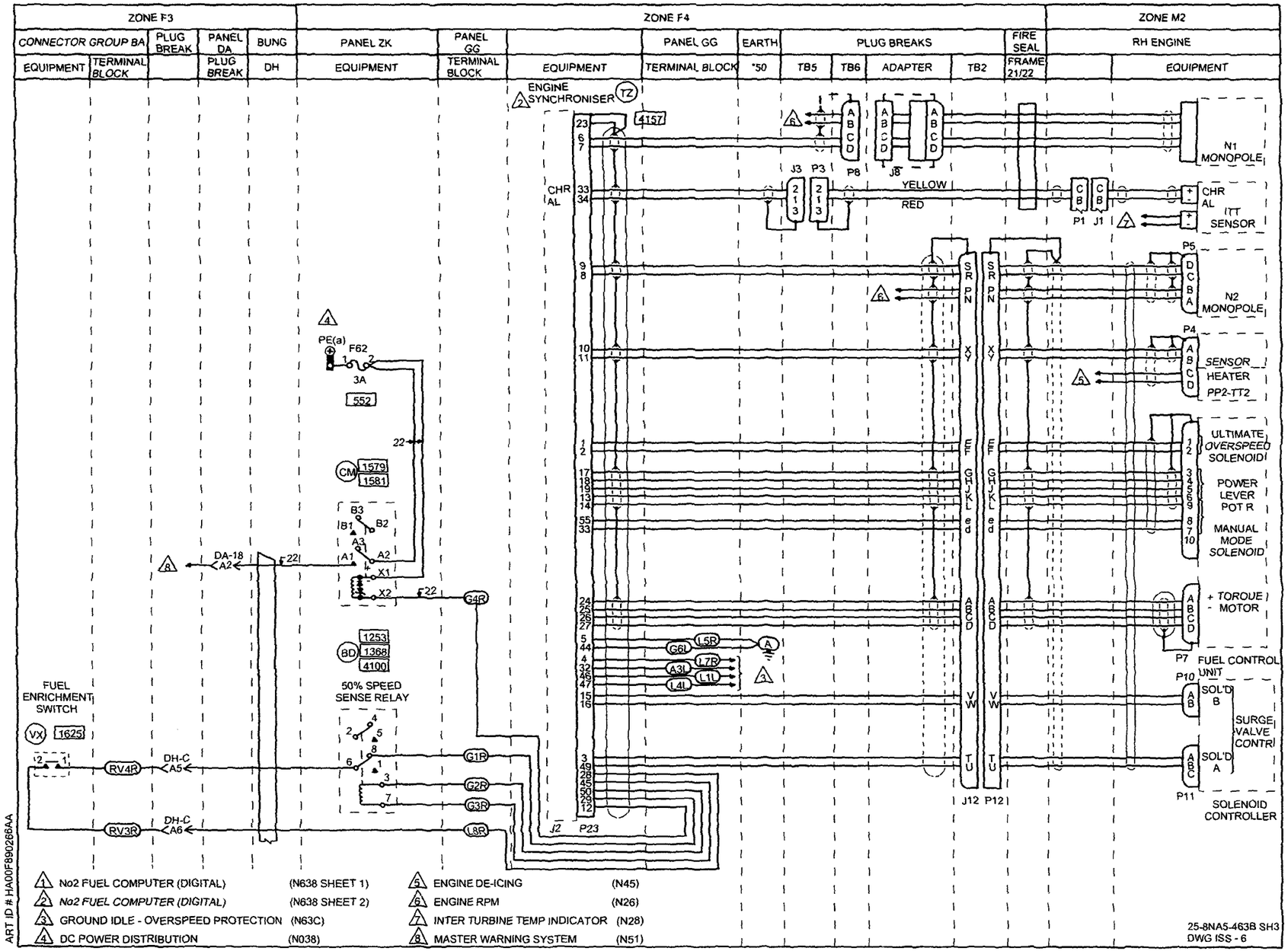
ZONE F3
ZONE F4
ZONE M2
CONNECTOR GROUP BA
PLUG BREAK
PANEL DA
BUNG
PANEL ZK
PANEL GG
PANEL GG
EARTH
PLUG BREAKS
FIRE SEAL
RH ENGINE
EQUIPMENT
TERMINAL BLOCK
PLUG BREAK
DH
EQUIPMENT
TERMINAL BLOCK
EQUIPMENT
TERMINAL BLOCK
*50
TB5
TB6
ADAPTER
TB2
FRAME 21/22
EQUIPMENT
ENGINE SYNCHRONISER
N1 MONOPOLE
CHR AL
ITT SENSOR
YELLOW
RED
N2 MONOPOLE
SENSOR HEATER
PP2-TT2
ULTIMATE OVERSPEED SOLENOID
POWER LEVER POT R
MANUAL MODE SOLENOID
+ TORQUE - MOTOR
FUEL CONTROL UNIT
SOL'D B
SURGE VALVE CONTRI
SOL'D A
SOLENOID CONTROLLER
FUEL ENRICHMENT SWITCH
50% SPEED SENSE RELAY
PE(a)
F62
3A
552
1579
1581
1253
1368
4100
1625
DA-18
DH-C
RV4R
RV3R
G4R
G1R
G2R
G3R
L8R
G6L
L5R
A3L
L7R
L4L
L1L
J12 P12
J2 P23
1 No2 FUEL COMPUTER (DIGITAL) (N638 SHEET 1)
2 No2 FUEL COMPUTER (DIGITAL) (N638 SHEET 2)
3 GROUND IDLE - OVERSPEED PROTECTION (N63C)
4 DC POWER DISTRIBUTION (N038)
5 ENGINE DE-ICING (N45)
6 ENGINE RPM (N26)
7 INTER TURBINE TEMP INDICATOR (N28)
8 MASTER WARNING SYSTEM (N51)
ART ID # HA00F890266AA
25-8NA5-463B SH3
DWG ISS - 6

IDENT	PART NUMBER	1234567 NOMENCLATURE	EFFECT FROM TO	UNITS PER ASSY
		NO.2 FUEL COMPUTER	091276	
	25-8NA5-463B	WIRING DIAGRAM-		RF
		(MOD 253149C)		
A-GG	HWBUN1146D10B	.TERMINAL BLOCK-		1
		(VK0574)		
BD-ZK	HDS8SF3J03	.RELAY-		1
		(VK1793)		
		(USED WITH SOCKET:		
		RSE120074		
		(V58982))		
BL-CC	99-223	.MODULE-LAMP		1
		(V32245)		
BM-CC	99-223	.MODULE-LAMP		1
		(V32245)		
CC2-P	BAEREF000003124	.CONNECTOR-SOCKET		1
		(6027-20-41SWCONDB		
		(VK1793))		
		(USED WITH OUTLET:		
		602GB129-20-1		
		(VK1100))		
CC2-R	6026-20-41PW	.CONNECTOR-PIN		1
		(VK4161)		
		(USED WITH OUTLET:		
		602GB129-20-1		
		(VK1100))		
CG4-P	MTC100YH1-003	.SHELL-PLUG	091254	1
		(VK1010)		
		(USED WITH WAFERS:		
		TYPE A, MTC100KT1-1101		
		TYPE B, MTC100KTI-1102)		
CG4-P	MTC100YH1-003	.SHELL-PLUG	255276	1
		(VK1010)		
		(USED WITH INSERT:		
		MTC100YC1-005)		
CG4-R	MTC100YH1-004	.SHELL-RECEPTACLE	091254	1
		(VK1010)		
		(USED WITH WAFERS:		
		TYPE A, MTC100KT1-1103		
		TYPE B, MTC100KT1-1104)		
CG4-R	MTC100YH1-004	.SHELL-RECEPTACLE	255276	1
		(VK1010)		
		(USED WITH INSERT:		
		MTC100YC1-006)		
CG5-P	MTC100YH1-003	.SHELL-PLUG	091254	1
		(VK1010)		
		(USED WITH WAFERS:		
		TYPE A, MTC100KT1-1101		
		TYPE B, MTC100KT1-1102)		
		MISSING ITEM NO. NOT APPLICABLE		

– ITEM NOT ILLUSTRATED

IDENT	PART NUMBER	1234567 NOMENCLATURE	EFFECT FROM TO	UNITS PER ASSY
CG5-P	MTC100YH1-003	.SHELL-PLUG (VK1010) (USED WITH INSERT: MTC100YC1-005)	255276	1
CG5-R	MTC100YH1-004	.SHELL-RECEPTACLE (VK1010) (USED WITH WAFERS: TYPE A, MTC100KT1-1103 TYPE B, MTC100KT1-1104)	091254	1
CG5-R	MTC100YH1-004	.SHELL-RECEPTACLE (VK1010) (USED WITH INSERT: MTC100YC1-006)	255276	1
CG7-P	MTC100YH2-009	.SHELL-PLUG (VK1010) (USED WITH WAFERS: TYPE A, MTC100KT2-1101 TYPE B, MTC100KT2-1102)	091254	1
CG7-P	MTC100YH2-009	.SHELL-PLUG (VK1010) (USED WITH INSERTS: PRIMARY MTC100YC1-001 SECONDARY MTC100YC1-002)	255276	1
CG7-R	MTC100YH2-010	.SHELL-RECEPTACLE (VK1010) (USED WITH WAFERS: TYPE A, MTC100KT2-1101 TYPE B, MTC100KT2-1102)	091254	1
CG7-R	MTC100YH2-010	.SHELL-RECEPTACLE (VK1010) (USED WITH INSERTS: PRIMARY MTC100YC1-001 SECONDARY MTC100YC1-002)	255276	1
CM-ZK	M300-1264	.RELAY- (VK6265) (USED WITH SOCKET: M12883-41-16 (V81349))		1
DA18-P	MTC100YH1-003	.SHELL-PLUG (VK1010) (USED WITH WAFERS: TYPE A, MTC100KT1-1101 DUMMY, MTCX1X100-100)	091254	1
DA18-P	MTC100YH1-003	.SHELL-PLUG (VK1010) (USED WITH INSERT: MTC100YC1-005)	255276	1

MISSING ITEM NO. NOT APPLICABLE

– ITEM NOT ILLUSTRATED

IDENT	PART NUMBER	1234567 NOMENCLATURE	EFFECT FROM TO	UNITS PER ASSY
DA18-R	MTC100YH1-004	.SHELL-RECEPTACLE (VK1010) (USED WITH WAFERS: TYPE A, MTC100KT1-1103 DUMMY, MTCX1X100-100)	091254	1
DA18-R	MTC100YH1-004	.SHELL-RECEPTACLE (VK1010) (USED WITH INSERT: MTC100YC1-006)	255276	1
DH	422254-9	.BUNG- (VK1793)		1
DHC-P	MTC100YH1-003	.SHELL-PLUG (VK1010) (USED WITH WAFERS: TYPE A, MTC100KT1-1103 TYPE B, MTC100KT1-1104)	091254	1
DHC-P	MTC100YH1-003	.SHELL-PLUG (VK1010) (USED WITH INSERT: MTC100YC1-006)	255276	1
DHC-R	MTC100YH1-004	.SHELL-RECEPTACLE (VK1010) (USED WITH WAFERS: TYPE A, MTC100KT1-1101 TYPE B, MTC100KT1-1102)	091254	1
DHC-R	MTC100YH1-004	.SHELL-RECEPTACLE (VK1010) (USED WITH INSERT: MTC100YC1-005)	255276	1
E-GG	HWBUN1146D10B	.TERMINAL BLOCK- (VK0574)		1
F28-ZK	5920-99-0120075	.FUSE-3AMP (VK0657)		1
F35-ZK	5920-99-0120075	.FUSE-3AMP (VK0657)		1
F62-ZK	5920-99-0120075	.FUSE-3AMP (VK0657)		1
G-GG	HWBUN1146D10B	.TERMINAL BLOCK- (VK0574)		1
GD	2118002-6	.COMPUTER-FUEL (V99193)		1
GH-CC	BYW54	.DIODE- (VK0004)		1
L-GG	HWBUN1146D10B	.TERMINAL BLOCK- (VK0574)		1
NG-CG	2TP1-1	.SWITCH- (V91929) (OPT (VK6596))	091116	1
		MISSING ITEM NO. NOT APPLICABLE		

- ITEM NOT ILLUSTRATED

IDENT	PART NUMBER	1234567 NOMENCLATURE	EFFECT FROM TO	UNITS PER ASSY
NH-CG	2TP1-10	.SWITCH- (V91929) (OPT (VK6596))	091116	1
NHA-CG	BYW54	.DIODE- (VK0004)		1
RV-BA	HWBUN1146D5B	.TERMINAL BLOCK- (VK0574)		1
TC	HWBUN1147S10B	.TERMINAL BLOCK- (VK0574)		1
TG	2101822-1	.CONTROL UNIT-AUTOMATIC PERFORMANCE RESERVE (V99193)		1
TZ	2118114-1-2	.SYNCHRONISER-ENGINE (V70210)		1
VX-BA	B9021BB	.SWITCH- (V09298)		1
Y-CC	HWBUN1736D10B	.TERMINAL BLOCK- (VK0574)		1

MISSING ITEM NO. NOT APPLICABLE

– ITEM NOT ILLUSTRATED

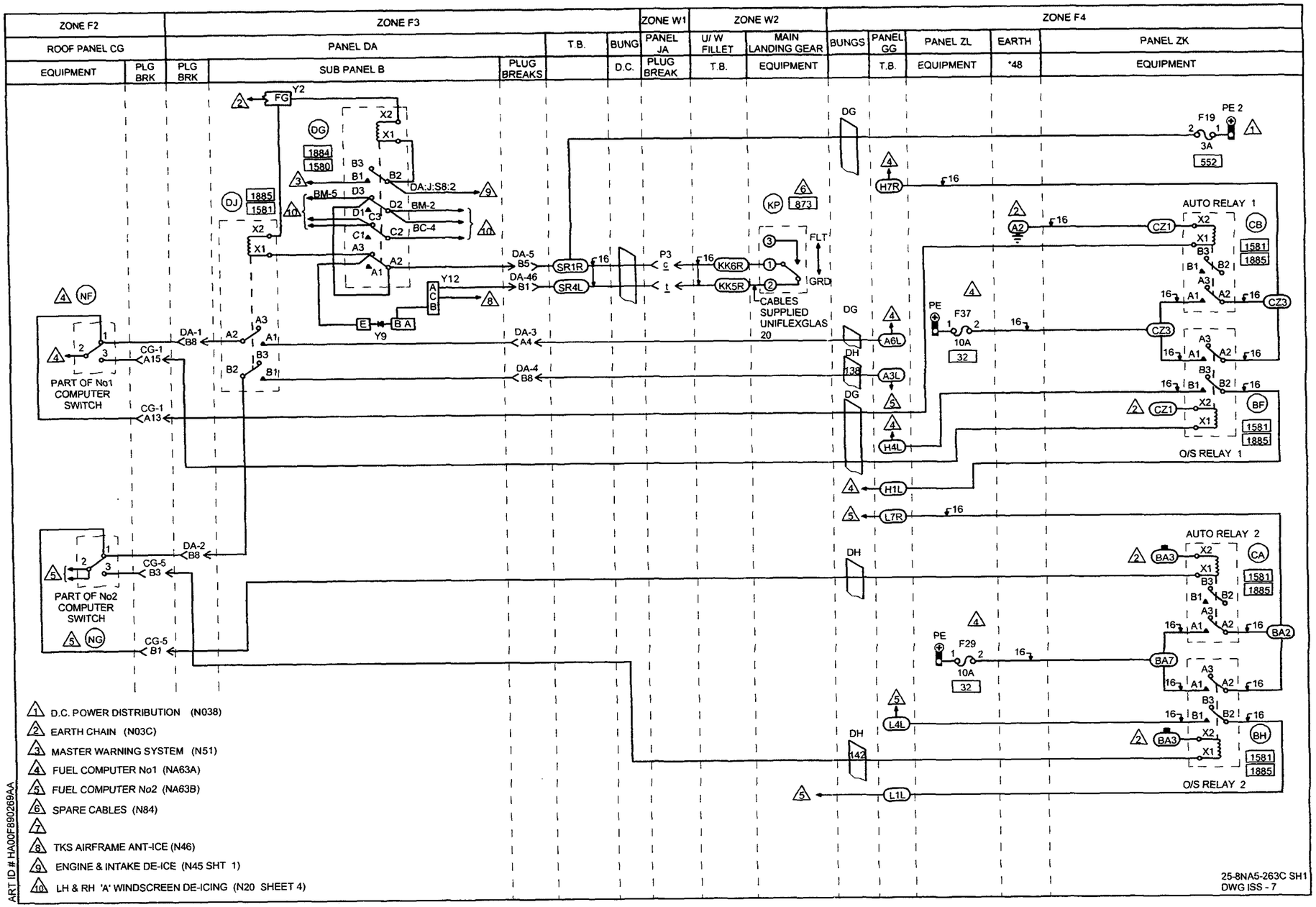
ZONE F2
ZONE F3
ZONE W1
ZONE W2
ZONE F4
ROOF PANEL CG
PANEL DA
T.B.
BUNG
PANEL JA
U/ W FILLET
MAIN LANDING GEAR
BUNGS
PANEL GG
PANEL ZL
EARTH
PANEL ZK
EQUIPMENT
PLG BRK
PLG BRK
SUB PANEL B
PLUG BREAKS
D.C.
PLUG BREAK
T.B.
EQUIPMENT
T.B.
EQUIPMENT
*48
EQUIPMENT
PART OF No1 COMPUTER SWITCH
PART OF No2 COMPUTER SWITCH
CABLES SUPPLIED UNIFLEXGLAS 20
AUTO RELAY 1
O/S RELAY 1
AUTO RELAY 2
O/S RELAY 2
1 D.C. POWER DISTRIBUTION (N038)
2 EARTH CHAIN (N03C)
3 MASTER WARNING SYSTEM (N51)
4 FUEL COMPUTER No1 (NA63A)
5 FUEL COMPUTER No2 (NA63B)
6 SPARE CABLES (N84)
7
8 TKS AIRFRAME ANT-ICE (N46)
9 ENGINE & INTAKE DE-ICE (N45 SHT 1)
10 LH & RH 'A' WINDSCREEN DE-ICING (N20 SHEET 4)
ART ID # HA00F890269AA
25-8NA5-263C SH1
DWG ISS - 7

IDENT	PART NUMBER	1234567 NOMENCLATURE	EFFECT FROM TO	UNITS PER ASSY
		ENGINE IDLE SPEED CONTROL	091276	
	25-8NA5-263C	WIRING DIAGRAM-		RF
		(MOD 253149C)		
A-GG	HWBUN1146D10B	.TERMINAL BLOCK-		1
		(VK0574)		
BA-ZK	HWBUN1146S10B	.TERMINAL BLOCK-		1
		(VK0574)		
BF-ZK	M300-1264	.RELAY-		1
		(VK6265)		
		(USED WITH SOCKET:		
		M12883-41-16		
		(V81349))		
BH-ZK	M300-1264	.RELAY-		1
		(VK6265)		
		(USED WITH SOCKET:		
		M12883-41-16		
		(V81349))		
CA-ZK	M300-1264	.RELAY-		1
		(VK6265)		
		(USED WITH SOCKET:		
		M12883-41-16		
		(V81349))		
CB-ZK	M300-1264	.RELAY-		1
		(VK6265)		
		(USED WITH SOCKET:		
		M12883-41-16		
		(V81349))		
CG1-P	MTC100YH2-009	.SHELL-PLUG	091254	1
		(VK1010)		
		(USED WITH WAFERS:		
		TYPE A, MTC100KT2-1101		
		TYPE B, MTC100KT2-1102)		
CG1-P	MTC100YH2-009	.SHELL-PLUG	255276	1
		(VK1010)		
		(USED WITH INSERTS:		
		PRIMARY MTC100YC1-001		
		SECONDARY MTC100YC1-002)		
CG1-R	MTC100YH2-010	.SHELL-RECEPTACLE	091254	1
		(VK1010)		
		(USED WITH WAFERS:		
		TYPE A, MTC100KT2-1103		
		TYPE B, MTC100KT2-1104)		
CG1-R	MTC100YH2-010	.SHELL-RECEPTACLE	255276	1
		(VK1010)		
		(USED WITH INSERTS:		
		PRIMARY MTC100YC1-003		
		SECONDARY MTC100YC1-004)		
		MISSING ITEM NO. NOT APPLICABLE		

– ITEM NOT ILLUSTRATED

IDENT	PART NUMBER	1234567 NOMENCLATURE	EFFECT FROM TO	UNITS PER ASSY
CG5-P	MTC100YH1-003	.SHELL-PLUG (VK1010) (USED WITH WAFERS: TYPE A, MTC100KT1-1101 TYPE B, MTC100KT1-1102)	091254	1
CG5-P	MTC100YH1-003	.SHELL-PLUG (VK1010) (USED WITH INSERT: MTC100YC1-005)	255276	1
CG5-R	MTC100YH1-004	.SHELL-RECEPTACLE (VK1010) (USED WITH WAFERS: TYPE A, MTC100KT1-1103 TYPE B, MTC100KT1-1104)	091254	1
CG5-R	MTC100YH1-004	.SHELL-RECEPTACLE (VK1010) (USED WITH INSERT: MTC100YC1-006)	255276	1
CZ-ZK	HWBUN1736S5B	.TERMINAL BLOCK- (VK0574)		1
DA1-P	MTC100YH1-003	.SHELL-PLUG (VK1010) (USED WITH WAFERS: TYPE A, MTC100KT1-1101 TYPE B, MTC100KT1-1102)	091254	1
DA1-P	MTC100YH1-003	.SHELL-PLUG (VK1010) (USED WITH INSERT: MTC100YC1-005)	255276	1
DA1-R	MTC100YH1-004	.SHELL-RECEPTACLE (VK1010) (USED WITH WAFERS: TYPE A, MTC100KT1-1103 TYPE B, MTC100KT1-1104)	091254	1
DA1-R	MTC100YH1-004	.SHELL-RECEPTACLE (VK1010) (USED WITH INSERT: MTC100YC1-006)	255276	1
DA2-P	MTC100YH1-003	.SHELL-PLUG (VK1010) (USED WITH WAFERS: TYPE A, MTC100KT1-1101 TYPE B, MTC100KT1-1102)	091254	1
DA2-P	MTC100YH1-003	.SHELL-PLUG (VK1010) (USED WITH INSERT: MTC100YC1-005)	255276	1
		MISSING ITEM NO. NOT APPLICABLE		

– ITEM NOT ILLUSTRATED

IDENT	PART NUMBER	1234567 NOMENCLATURE	EFFECT FROM TO	UNITS PER ASSY
DA2-R	MTC100YH1-004	.SHELL-RECEPTACLE (VK1010) (USED WITH WAFERS: TYPE A, MTC100KT1-1103 TYPE B, MTC100KT1-1104)	091254	1
DA2-R	MTC100YH1-004	.SHELL-RECEPTACLE (VK1010) (USED WITH INSERT: MTC100YC1-006)	255276	1
DA3-P	MTC100YH1-003	.SHELL-PLUG (VK1010) (USED WITH WAFERS: TYPE A, MTC100KT1-1101 TYPE B, MTC100KT1-1102)	091254	1
DA3-P	MTC100YH1-003	.SHELL-PLUG (VK1010) (USED WITH INSERT: MTC100YC1-005)	255276	1
DA3-R	MTC100YH1-004	.SHELL-RECEPTACLE (VK1010) (USED WITH WAFERS: TYPE A, MTC100KT1-1103 TYPE B, MTC100KT1-1104)	091254	1
DA3-R	MTC100YH1-004	.SHELL-RECEPTACLE (VK1010) (USED WITH INSERT: MTC100YC1-006)	255276	1
DA4-P	MTC100YH2-009	.SHELL-PLUG (VK1010) (USED WITH WAFERS: TYPE A, MTC100KT2-1101 TYPE B, MTC100KT2-1102)	091254	1
DA4-P	MTC100YH2-009	.SHELL-PLUG (VK1010) (USED WITH INSERTS: PRIMARY MTC100YC1-001 SECONDARY MTC100YC1-002)	255276	1
DA4-R	MTC100YH2-010	.SHELL-RECEPTACLE (VK1010) (USED WITH WAFERS: TYPE A, MTC100KT2-1103 TYPE B, MTC100KT2-1104)	091254	1
DA4-R	MTC100YH2-010	.SHELL-RECEPTACLE (VK1010) (USED WITH INSERTS: PRIMARY MTC100YC1-003 SECONDARY MTC100YC1-004)	255276	1
		MISSING ITEM NO. NOT APPLICABLE		

– ITEM NOT ILLUSTRATED

IDENT	PART NUMBER	1234567 NOMENCLATURE	EFFECT FROM TO	UNITS PER ASSY
DA46-P	MTC100YH1-003	.SHELL-PLUG (VK1010) (USED WITH WAFERS: TYPE A, MTC100KT1-1101 TYPE B, MTC100KT1-1102)	091254	1
DA46-P	MTC100YH1-003	.SHELL-PLUG (VK1010) (USED WITH INSERT: MTC100YC1-005)	255276	1
DA46-R	MTC100YH1-004	.SHELL-RECEPTACLE (VK1010) (USED WITH WAFERS: TYPE A, MTC100KT1-1103 TYPE B, MTC100KT1-1104)	091254	1
DA46-R	MTC100YH1-004	.SHELL-RECEPTACLE (VK1010) (USED WITH INSERT: MTC100YC1-006)	255276	1
DA5-P	MTC100YH2-009	.SHELL-PLUG (VK1010) (USED WITH WAFERS: TYPE A, MTC100KT2-1101 TYPE B, MTC100KT2-1102)	091254	1
DA5-P	MTC100YH2-009	.SHELL-PLUG (VK1010) (USED WITH INSERTS: PRIMARY MTC100YC1-001 SECONDARY MTC100YC1-002)	255276	1
DA5-R	MTC100YH2-010	.SHELL-RECEPTACLE (VK1010) (USED WITH WAFERS: TYPE A, MTC100KT2-1103 TYPE B, MTC100KT2-1104)	091254	1
DA5-R	MTC100YH2-010	.SHELL-RECEPTACLE (VK1010) (USED WITH INSERTS: PRIMARY MTC100YC1-003 SECONDARY MTC100YC1-004)	255276	1
DC	422254-8	.BUNG- (VK1793)		1
DG	422255-8	.BUNG- (VK1793)		1
DG-DAB	M400-1265	.RELAY- (VK6265) (USED WITH SOCKET: M12883-40-19 (V81349))		1
DH	422254-9	.BUNG- (VK1793)		1
		MISSING ITEM NO. NOT APPLICABLE		

– ITEM NOT ILLUSTRATED

IDENT	PART NUMBER	1234567 NOMENCLATURE	EFFECT FROM TO	UNITS PER ASSY
DJ-DAB	M300-1264	.RELAY- (VK6265) (USED WITH SOCKET: M12883-41-16 (V81349))		1
F19-ZK	5920-99-0120075	.FUSE-3AMP (VK0657)		1
F29-ZL	5920-99-0120078	.FUSE-10AMP (VK0657)		1
F37-ZL	5920-99-0120078	.FUSE-10AMP (VK0657)		1
H-GG	HWBUN1146D10B	.TERMINAL BLOCK- (VK0574)		1
JAP3-P	BAEREF000004075	.CONNECTOR-PIN (6026-22-41PWCONDD (VK1793))		1
JAP3-R	BAEREF000004149	.CONNECTOR-SOCKET (6027-22-41SWCONDD (VK1793))		1
KK	72544-030-0AV2	.TERMINAL BLOCK- (VK0574)		1
KP	25-8NW47A	.MICRO SWITCH-ASSY (COMPRISING OF: SWITCH 1EN1-14N119 (V91929) (OPT (VK6596)))		1
L-GG	HWBUN1146D10B	.TERMINAL BLOCK- (VK0574)		1
NF-CG	2TP1-1M	.SWITCH- (V91929) (OPT (VK6596))		1
NG-CG	2TP1-1M	.SWITCH- (V91929) (OPT (VK6596))		1
SR	HWBUN1146D10B	.TERMINAL BLOCK- (VK0574)		1
Y12-DAB	MRTB20E57-111	.TERMINAL JUNCTION MODULE- (V14283)		1
Y2-DAB	MRTB20E04-111	.TERMINAL JUNCTION MODULE- (V14283)		1
Y9-DAB	MRTB20E03-784	.TERMINAL JUNCTION MODULE- (V14283)		1
		MISSING ITEM NO. NOT APPLICABLE		

– ITEM NOT ILLUSTRATED

CHAPTER

77

ENGINE INDICATING

CHAPTER 77 - ENGINE INDICATING

TABLE OF CONTENTS

SUBJECT	CHAPTER SECTION UNIT	FIGURE	EFFECT
POWER	77-10-00		
ENGINE R.P.M.	77-10-10	2	091179 181276

CHAPTER 77 - ENGINE INDICATING

TABLE OF CONTENTS

SUBJECT	CHAPTER SECTION UNIT	FIGURE	EFFECT
TEMPERATURE	77-20-00		
INTER TURBINE TEMPERATURE INDICATOR	77-20-10	2	091276

CHAPTER 77 - ENGINE INDICATING

TABLE OF CONTENTS

SUBJECT	CHAPTER SECTION UNIT	FIGURE	EFFECT
CHIP DETECTORS	77-40-00		
LH/RH ENGINE CHIP DETECTOR	77-40-10	2	091229

CH-SECT-UNIT-FIG	PAGE NO.	DATE
*77	1	AUG 31/03
*77	2	AUG 31/03
*77	3	AUG 31/03
77-10-00	1	MAY 31/02
77-10-10- 2	0	MAY 31/02
77-10-10- 2	0A	NOV 30/02
77-10-10- 2	1	MAY 31/02
77-10-10- 2	2	MAY 31/02
77-10-10- 2	3	MAY 31/02
77-10-10- 2	4	MAY 31/02
77-20-00	1	MAY 31/02
77-20-10- 2	0	NOV 30/02
77-20-10- 2	1	MAY 31/02
77-20-10- 2	2	MAY 31/02
77-40-00	1	MAY 31/02
77-40-10- 2	0	NOV 30/02
77-40-10- 2	1	MAY 31/02
77-40-10- 2	2	MAY 31/02

CH-SECT-UNIT-FIG	PAGE NO.	DATE

*THE ASTERISK INDICATES PAGES CHANGED OR ADDED BY THE CURRENT REVISION

POWER

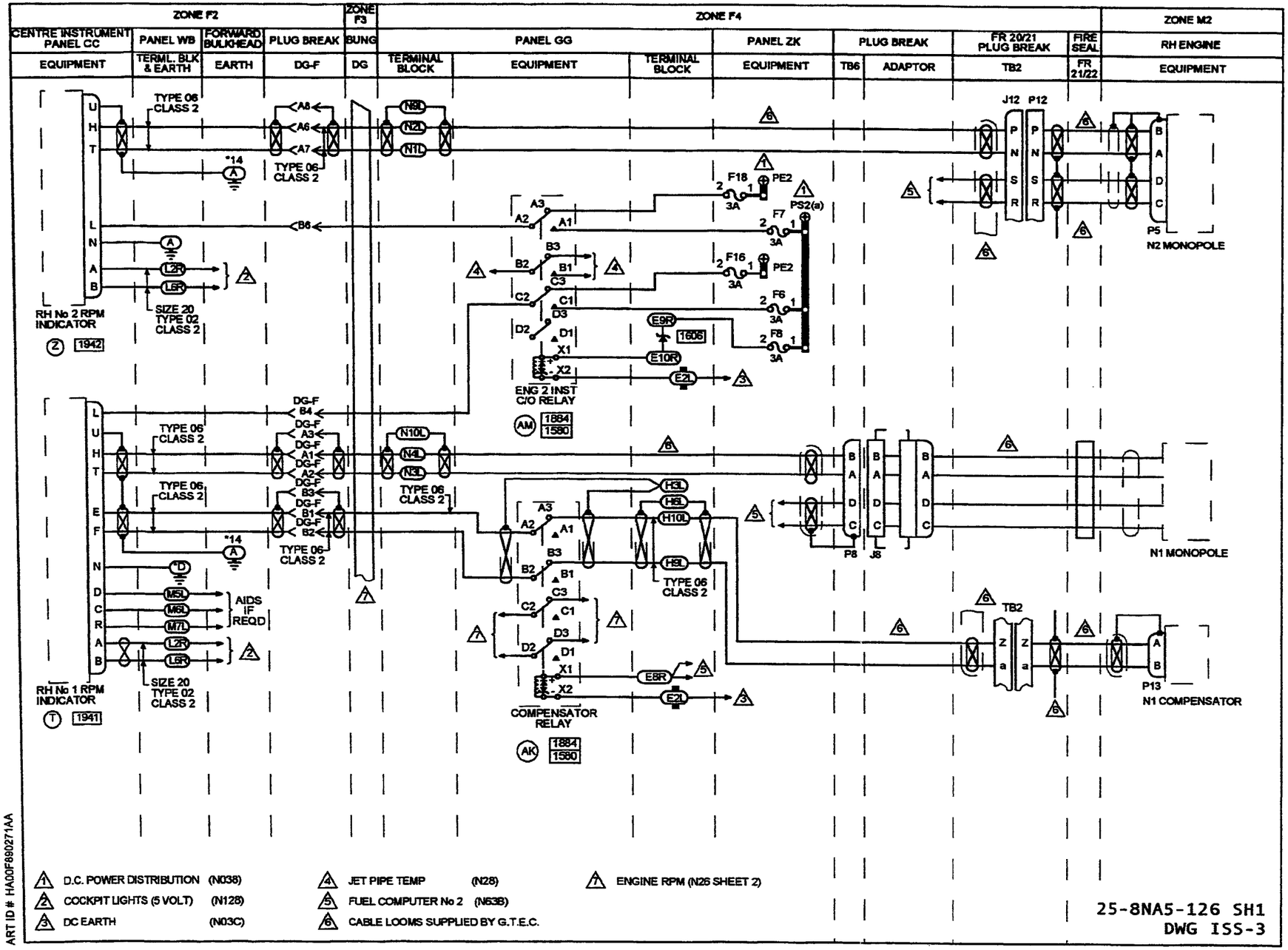

ART ID # HA00F8902271AA

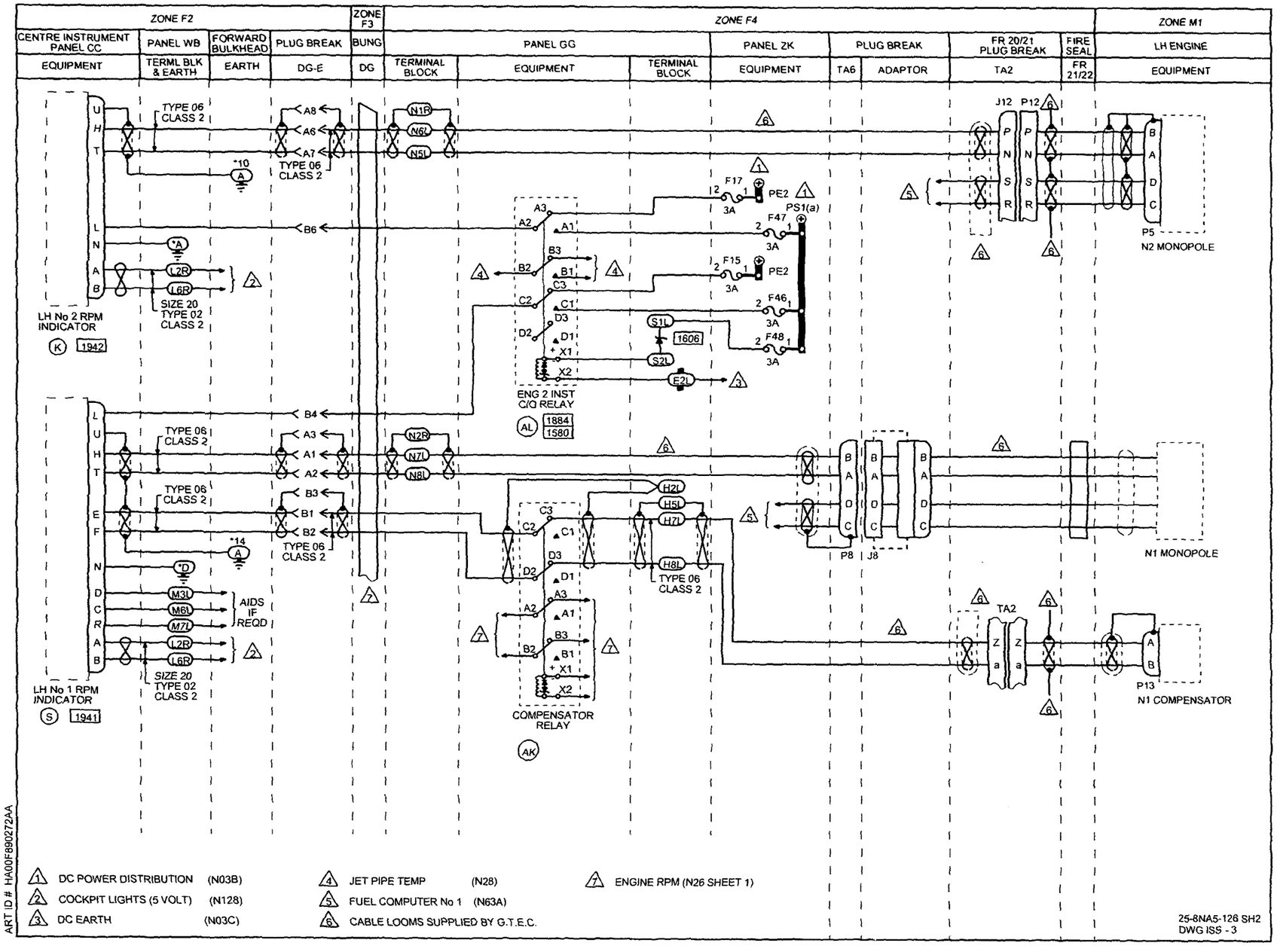
ZONE F2
ZONE F3
ZONE F4
ZONE M1
CENTRE INSTRUMENT PANEL CC
PANEL WB
FORWARD BULKHEAD
PLUG BREAK
BUNG
PANEL GG
PANEL ZK
PLUG BREAK
FR 20/21 PLUG BREAK
FIRE SEAL
LH ENGINE
EQUIPMENT
TERML BLK & EARTH
EARTH
DG-E
DG
TERMINAL BLOCK
EQUIPMENT
TERMINAL BLOCK
EQUIPMENT
TA6
ADAPTOR
TA2
FR 21/22
EQUIPMENT
TYPE 06 CLASS 2
SIZE 20 TYPE 02 CLASS 2
LH No 2 RPM INDICATOR
1942
LH No 1 RPM INDICATOR
1941
ENG 2 INST C/O RELAY
1884
1580
1606
COMPENSATOR RELAY
AIDS IF REQD
P8
J8
J12
P12
P5
N2 MONOPOLE
N1 MONOPOLE
TA2
P13
N1 COMPENSATOR
PS1(a)
PE2
F17
F15
F47
F46
F48
3A
1 DC POWER DISTRIBUTION (N03B)
2 COCKPIT LIGHTS (5 VOLT) (N128)
3 DC EARTH (N03C)
4 JET PIPE TEMP (N28)
5 FUEL COMPUTER No 1 (N63A)
6 CABLE LOOMS SUPPLIED BY G.T.E.C.
7 ENGINE RPM (N26 SHEET 1)
25-8NA5-126 SH2
DWG ISS - 3
ART ID # HA00F890272AA

IDENT	PART NUMBER	1234567 NOMENCLATURE	EFFECT FROM TO	UNITS PER ASSY
		ENGINE R.P.M.	091179 181276	
	25-8NA5-126	WIRING DIAGRAM- (MOD 253149C)		1
AK-GG	M400-1265	.RELAY- (VK6265) (USED WITH SOCKET: M12883-40-19 (V81349))		1
AL-GG	M400-1265	.RELAY- (VK6265) (USED WITH SOCKET: M12883-40-19 (V81349))		1
AM-GG	M400-1265	.RELAY- (VK6265) (USED WITH SOCKET: M12883-40-19 (V81349))		1
DG	422255-8	.BUNG- (VK1793)		1
DGE-P	MTC100YH2-009	.SHELL-PLUG (VK1010) (USED WITH WAFERS: TYPE A, MTC100KT2-1103 TYPE B, MTC100KT2-1104)	091179 181254	1
DGE-P	MTC100YH2-009	.SHELL-PLUG (VK1010) (USED WITH INSERTS: PRIMARY MTC100YC1-003 SECONDARY MTC100YC1-004)	255276	1
DGE-R	MTC100YH2-010	.SHELL-RECEPTACLE (VK1010) (USED WITH WAFERS: TYPE A, MTC100KT2-1101 TYPE B, MTC100KT2-1102)	091179 181254	1
DGE-R	MTC100YH2-010	.SHELL-RECEPTACLE (VK1010) (USED WITH INSERTS: PRIMARY MTC100YC1-001 SECONDARY MTC100YC1-002)	255276	1
DGF-P	MTC100YH2-009	.SHELL-PLUG (VK1010) (USED WITH WAFERS: TYPE A, MTC100KT2-1103 TYPE B, MTC100KT2-1104)	091179 181254	1
		MISSING ITEM NO. NOT APPLICABLE		

– ITEM NOT ILLUSTRATED

IDENT	PART NUMBER	1234567 NOMENCLATURE	EFFECT FROM TO	UNITS PER ASSY
DGF-P	MTC100YH2-009	.SHELL-PLUG (VK1010) (USED WITH INSERTS: PRIMARY MTC100YC1-003 SECONDARY MTC100YC1-004)	255276	1
DGF-R	MTC100YH2-010	.SHELL-RECEPTACLE (VK1010) (USED WITH WAFERS: TYPE A, MTC100KT2-1101 TYPE B, MTC100KT2-1102)	091179 181254	1
DGF-R	MTC100YH2-010	.SHELL-RECEPTACLE (VK1010) (USED WITH INSERTS: PRIMARY MTC100YC1-001 SECONDARY MTC100YC1-002)	255276	1
E-GG	HWBUN1146D10B	.TERMINAL BLOCK- (VK0574) (USED WITH DIODE: 1N4005) (OPT DIODE BWY54 (VK0004)))		1
F15-ZK	5920-99-0120075	.FUSE-3AMP (VK0657)		1
F16-ZK	5920-99-0120075	.FUSE-3AMP (VK0657)		1
F17-ZK	5920-99-0120075	.FUSE-3AMP (VK0657)		1
F18-ZK	5920-99-0120075	.FUSE-3AMP (VK0657)		1
F46-ZK	5920-99-0120075	.FUSE-3AMP (VK0657)		1
F47-ZK	5920-99-0120075	.FUSE-3AMP (VK0657)		1
F48-ZK	5920-99-0120075	.FUSE-3AMP (VK0657)		1
F6-ZK	5920-99-0120075	.FUSE-3AMP (VK0657)		1
F7-ZK	5920-99-0120075	.FUSE-3AMP (VK0657)		1
F8-ZK	5920-99-0120075	.FUSE-3AMP (VK0657)		1
H-GG	HWBUN1146D10B	.TERMINAL BLOCK- (VK0574)		1
K-CC	WL656RSA	.INDICATOR-NO.2 ENGINE SPEED (VK5294) (USED WITH CONNECTOR: PT08CE14-19SR (V77820))		1
		MISSING ITEM NO. NOT APPLICABLE		

– ITEM NOT ILLUSTRATED

IDENT	PART NUMBER	1234567 NOMENCLATURE	EFFECT FROM TO	UNITS PER ASSY
L-WA	72444-030-0AV2	.TERMINAL BLOCK- (VK0574)		1
L-WB	72444-030-0AV2	.TERMINAL BLOCK- (VK0574)		1
M-WA	72444-030-0AV2	.TERMINAL BLOCK- (VK0574)		1
M-WB	72444-030-0AV2	.TERMINAL BLOCK- (VK0574)		1
N-GG	HWBUN1146D10B	.TERMINAL BLOCK- (VK0574)		1
P12-TA2	3074256-3	.HARNESS-COMPUTER LH ENGINE (V7X000) (FOR SPARES SEE VENDORS COMPONENT MAINTENANCE MANUAL) (CMM 76-10-02)		1
P12-TB2	3074256-4	.HARNESS-COMPUTER (V07217) (FOR SPARES SEE VENDORS COMPONENT MAINTENANCE MANUAL) (CMM 76-10-02)		1
P8-TA6	3074256-3	.HARNESS-COMPUTER LH ENGINE (V7X000) (FOR SPARES SEE VENDORS COMPONENT MAINTENANCE MANUAL) (CMM 76-10-02)		1
P8-TB6	3074256-4	.HARNESS-COMPUTER (V07217) (FOR SPARES SEE VENDORS COMPONENT MAINTENANCE MANUAL) (CMM 76-10-02)		1
S-CC	WL717RSA	.INDICATOR-NO.1 ENGINE SPEED (VK5294) (USED WITH CONNECTOR: PT08CE14-19SR (V77820))		1
S-GG	HWBUN1146D10B	.TERMINAL BLOCK- (VK0574) (USED WITH DIODE: 1N4005) (OPT DIODE BWY54 (VK0004)))		1
		MISSING ITEM NO. NOT APPLICABLE		

– ITEM NOT ILLUSTRATED

IDENT	PART NUMBER	1234567 NOMENCLATURE	EFFECT FROM TO	UNITS PER ASSY
T-CC	WL717RSA	.INDICATOR-NO.1 ENGINE SPEED (VK5294) (USED WITH CONNECTOR: PT08CE14-19SR (V77820))		1
Z-CC	WL656RSA	.INDICATOR-NO.2 ENGINE SPEED (VK5294) (USED WITH CONNECTOR: PT08CE14-19SR (V77820))		1
		MISSING ITEM NO. NOT APPLICABLE		

– ITEM NOT ILLUSTRATED

TEMPERATURE

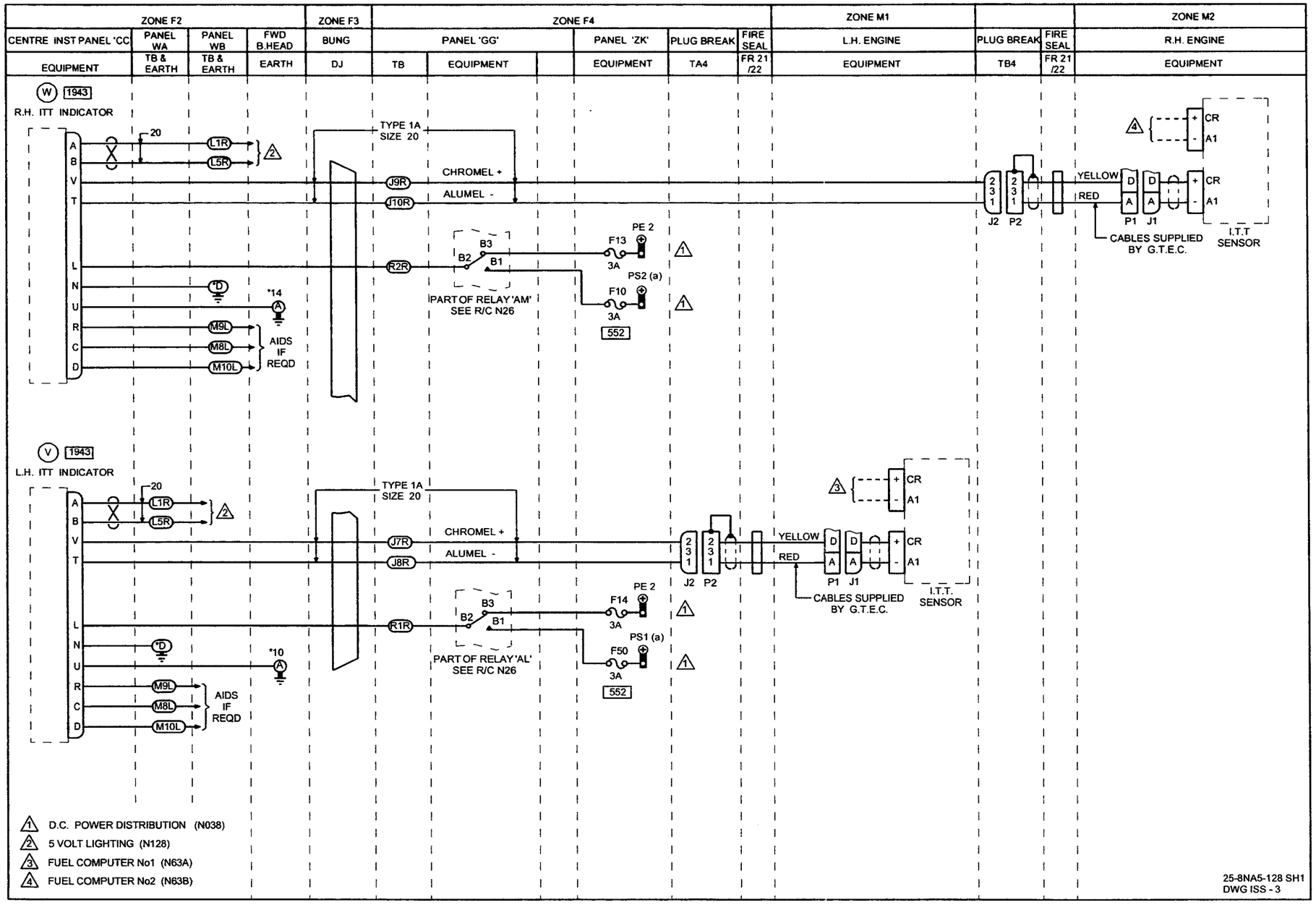

ART ID # HA00F890275AA

IDENT	PART NUMBER	1234567 NOMENCLATURE	EFFECT FROM TO	UNITS PER ASSY
		INTER TURBINE TEMPERATURE INDICATOR	091276	
	25-8NA5-128	WIRING DIAGRAM- (MOD 253149C)		RF
AL-GG	M400-1265	.RELAY- (VK6265) (USED WITH SOCKET: M12883-40-19 (V81349))		1
AM-GG	M400-1265	.RELAY- (VK6265) (USED WITH SOCKET: M12883-40-19 (V81349))		1
DJ	422255-7	.BUNG- (VK1793)		1
F10-ZK	5920-99-0120075	.FUSE-3AMP (VK0657)		1
F13-ZK	5920-99-0120075	.FUSE-3AMP (VK0657)		1
F14-ZK	5920-99-0120075	.FUSE-3AMP (VK0657)		1
F50-ZK	5920-99-0120075	.FUSE-3AMP (VK0657)		1
J-GG	HWBUN1146D10B	.TERMINAL BLOCK- (VK0574)		1
J2-TA4	M83723-83K0803N	.CONNECTOR- (V71468) (OPT (VK0316)) (USED WITH OUTLET: MS3417-08N (V96906))		1
J2-TB4	M83723-83K0803N	.CONNECTOR- (V71468) (OPT (VK0316)) (USED WITH OUTLET: MS3417-08N (V96906))		1
K-WB	72444-030-0AV2	.TERMINAL BLOCK- (VK0574)		1
L-WA	72444-030-0AV2	.TERMINAL BLOCK- (VK0574)		1
L-WB	72444-030-0AV2	.TERMINAL BLOCK- (VK0574)		1
M-WA	72444-030-0AV2	.TERMINAL BLOCK- (VK0574)		1
M-WB	72444-030-0AV2	.TERMINAL BLOCK- (VK0574)		1
R-GG	HWBUN1146D10B	.TERMINAL BLOCK- (VK0574)		1
		MISSING ITEM NO. NOT APPLICABLE		

- ITEM NOT ILLUSTRATED

IDENT	PART NUMBER	1234567 NOMENCLATURE	EFFECT FROM TO	UNITS PER ASSY
V-CC	WL718RSA3	.INDICATOR-ITT LH (VK5294)		1
V-CC-R	MS3476L14-19SW	.CONNECTOR-SOCKET (V96906) (USED WITH: OUTLET MS3152-14 CONTACT,ALUMEL 5100-108-120 CONTACT,CHROMEL 5100-108-220 (V14283))		1
W-CC	WL718RSA3	.INDICATOR-ITT RH (VK5294)		1
W-CC-R	MS3476L14-19SW	.CONNECTOR-SOCKET (V96906) (USED WITH: OUTLET MS3152-14 CONTACT,ALUMEL 5100-108-120 CONTACT,CHROMEL 5100-108-220 (V14283))		1
		MISSING ITEM NO. NOT APPLICABLE		

– ITEM NOT ILLUSTRATED

CHIP DETECTORS

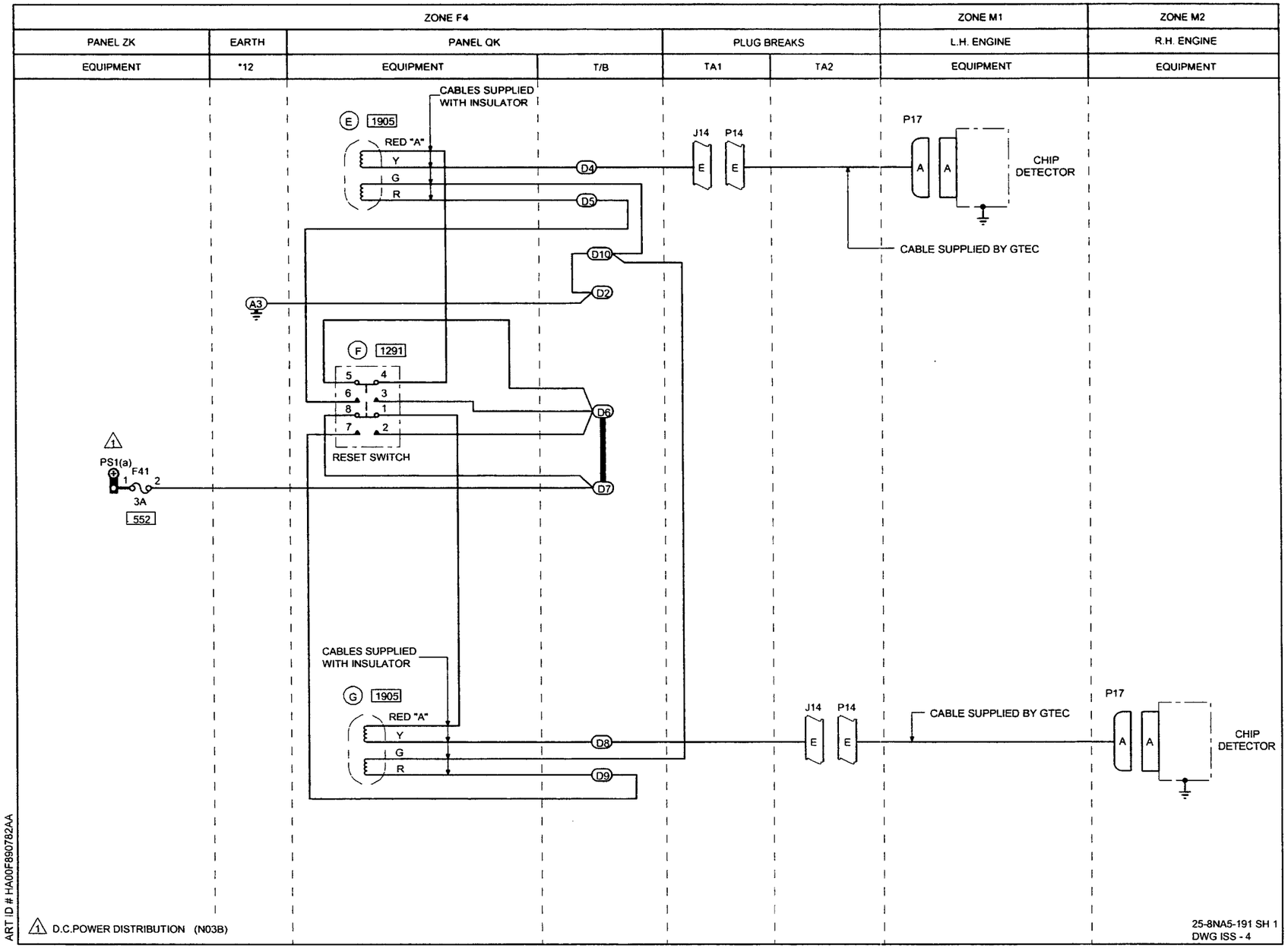
ZONE F4
ZONE M1
ZONE M2
PANEL ZK
EARTH
PANEL QK
PLUG BREAKS
L.H. ENGINE
R.H. ENGINE
EQUIPMENT
*12
EQUIPMENT
T/B
TA1
TA2
EQUIPMENT
EQUIPMENT
CABLES SUPPLIED WITH INSULATOR
E 1905
RED "A"
Y
G
R
D4
D5
D10
D2
A3
J14
P14
E
E
P17
A
A
CHIP DETECTOR
CABLE SUPPLIED BY GTEC
F 1291
5
4
6
3
8
1
7
2
D6
RESET SWITCH
D7
1
PS1(a)
F41
1
2
3A
552
CABLES SUPPLIED WITH INSULATOR
G 1905
RED "A"
Y
G
R
D8
D9
J14
P14
E
E
CABLE SUPPLIED BY GTEC
P17
A
A
CHIP DETECTOR
ART ID # HA00F890782AA
1 D.C.POWER DISTRIBUTION (N03B)
25-8NA5-191 SH 1
DWG ISS - 4

IDENT	PART NUMBER	1234567 NOMENCLATURE	EFFECT FROM TO	UNITS PER ASSY
		LH/RH ENGINE CHIP DETECTOR	091229	
	25-8NA5-191	WIRING DIAGRAM- (MODIFIED BY SB 79-3183-253289A) (MOD 253149C)		RF
CD-LH	3071437-2	.CHIP DETECTOR-MAGNETIC (V70210) (FOR FURTHER SPARES SEE VENDORS COMPONENT MAINTENANCE MANUAL) (CMM 79-20-03)		1
CD-LH	3071437-3	.CHIP DETECTOR-MAGNETIC (V70210) (FOR FURTHER SPARES SEE VENDORS COMPONENT MAINTENANCE MANUAL) (CMM 79-20-03)		1
CD-LH	3071437-4	.CHIP DETECTOR-MAGNETIC (V70210) (FOR FURTHER SPARES SEE VENDORS COMPONENT MAINTENANCE MANUAL) (CMM 79-20-03)		1
CD-RH	3071437-2	.CHIP DETECTOR-MAGNETIC (V70210) (FOR FURTHER SPARES SEE VENDORS COMPONENT MAINTENANCE MANUAL) (CMM 79-20-03)		1
CD-RH	3071437-3	.CHIP DETECTOR-MAGNETIC (V70210) (FOR FURTHER SPARES SEE VENDORS COMPONENT MAINTENANCE MANUAL) (CMM 79-20-03)		1
CD-RH	3071437-4	.CHIP DETECTOR-MAGNETIC (V70210) (FOR FURTHER SPARES SEE VENDORS COMPONENT MAINTENANCE MANUAL) (CMM 79-20-03)		1
D-QK	HWBUN1736S10B	.TERMINAL BLOCK- (VK0574)		1
J14-TA1	D38999-20KG39SN	.CONNECTOR-PLUG (VU0026) (USED WITH OUTLET: G8801S21 (VU0419))		1
		MISSING ITEM NO. NOT APPLICABLE		

– ITEM NOT ILLUSTRATED

IDENT	PART NUMBER	1234567 NOMENCLATURE	EFFECT FROM TO	UNITS PER ASSY
J14-TA2	D38999-20KG39SN	.CONNECTOR-PLUG (VU0026) (USED WITH OUTLET: G8801S21 (VU0419))		1
		MISSING ITEM NO. NOT APPLICABLE		

- ITEM NOT ILLUSTRATED

CHAPTER

78

EXHAUST

CHAPTER 78 - EXHAUST

TABLE OF CONTENTS

SUBJECT	CHAPTER SECTION UNIT	FIGURE	EFFECT
THRUST REVERSER	78-30-00		
THRUST REVERSE	78-30-05	1	028028
			091091
			094094
			097097
			111111
			113113
			123125
			127129
			132132
			135135
			138142
			144145
			147147
			150160
			162162
			166166
			168171
			177181
			183183
			185185
			187189
			191191
			193193
			195196
			199205
			207209
			216218
			220221
			223223
			225225
			230239
			241242
			253256
			259259
			263263
			272274
			276276
THRUST REVERSE	78-30-05	2	182182
			197197

CH-SECT-UNIT-FIG	PAGE NO.	DATE
*78	1	AUG 31/03
78-30-00	1	MAY 31/02
78-30-05- 1	0	MAY 31/02
78-30-05- 1	0A	MAY 31/02
78-30-05- 1	1	MAY 31/02
78-30-05- 1	2	MAY 31/02
78-30-05- 1	3	MAY 31/02
78-30-05- 1	4	MAY 31/02
78-30-05- 1	5	MAY 31/02
78-30-05- 2	0	MAY 31/02
78-30-05- 2	0A	NOV 30/02
78-30-05- 2	1	MAY 31/02
78-30-05- 2	2	MAY 31/02
78-30-05- 2	3	MAY 31/02

CH-SECT-UNIT-FIG	PAGE NO.	DATE

*THE ASTERISK INDICATES PAGES CHANGED OR ADDED BY THE CURRENT REVISION

THRUST REVERSER

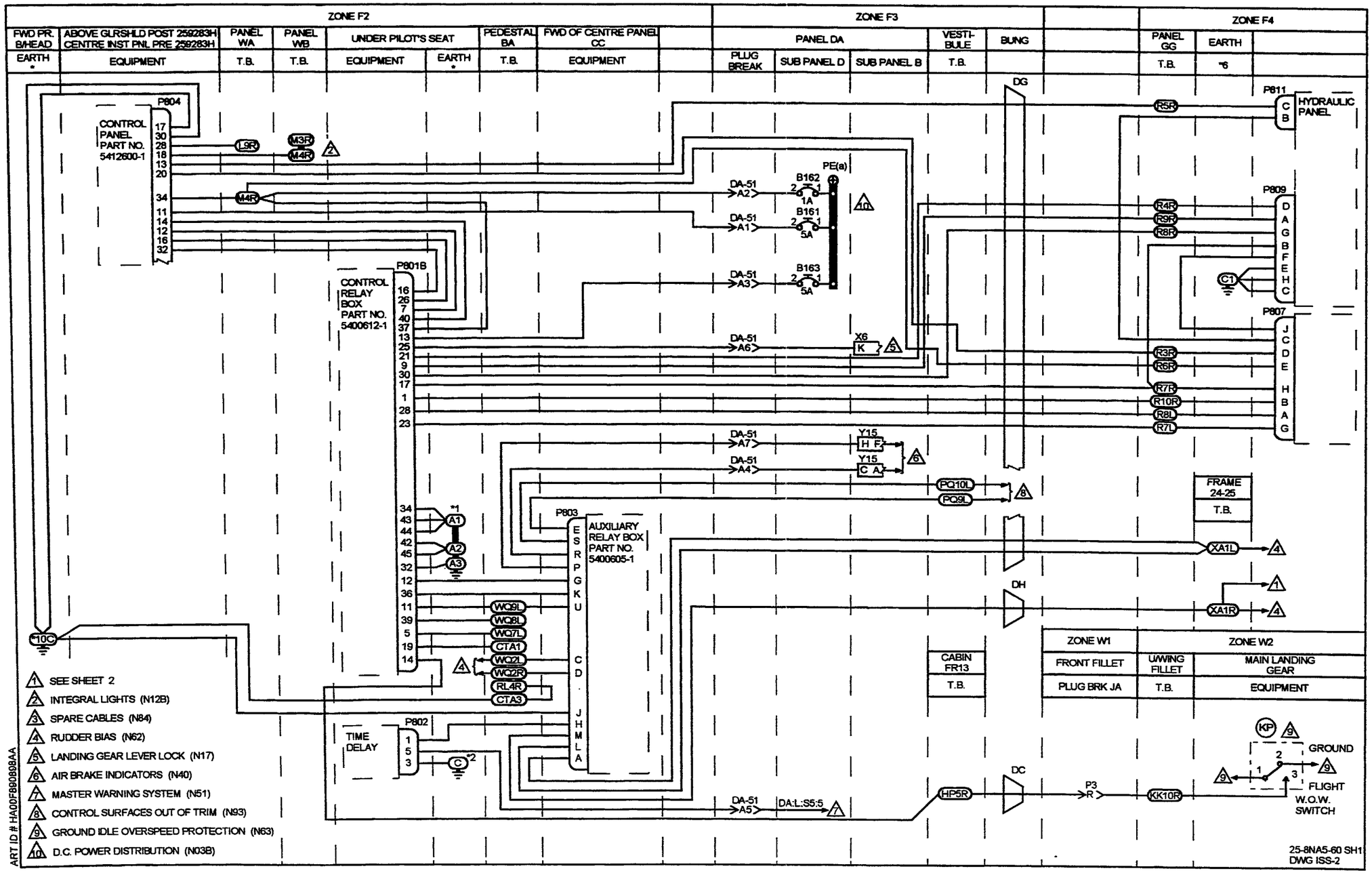
ZONE F2
FWD PR. B/HEAD
ABOVE GLRSHLD POST 259283H CENTRE INST PNL PRE 259283H
PANEL WA
PANEL WB
UNDER PILOT'S SEAT
PEDESTAL BA
FWD OF CENTRE PANEL CC
EARTH
EQUIPMENT
T.B.
EQUIPMENT
EARTH
T.B.
EQUIPMENT
ZONE F3
PANEL DA
PLUG BREAK
SUB PANEL D
SUB PANEL B
VESTI-BULE
T.B.
BUNG
ZONE F4
PANEL GG
EARTH
T.B.
*6
P804
CONTROL PANEL PART NO. 5412600-1
P801B
CONTROL RELAY BOX PART NO. 5400612-1
P803
AUXILIARY RELAY BOX PART NO. 5400605-1
P802
TIME DELAY
P811
HYDRAULIC PANEL
P809
P807
PE(a)
B162
B161
B163
DA-51 A2
DA-51 A1
DA-51 A3
DA-51 A6
DA-51 A7
DA-51 A4
DA-51 A5
DA:L:S5:5
X6
Y15
DG
DH
DC
FRAME 24-25
T.B.
XA1L
XA1R
CABIN FR13
T.B.
ZONE W1
ZONE W2
FRONT FILLET
U/WING FILLET
MAIN LANDING GEAR
PLUG BRK JA
T.B.
EQUIPMENT
GROUND
FLIGHT
W.O.W. SWITCH
1 SEE SHEET 2
2 INTEGRAL LIGHTS (N12B)
3 SPARE CABLES (N84)
4 RUDDER BIAS (N62)
5 LANDING GEAR LEVER LOCK (N17)
6 AIR BRAKE INDICATORS (N40)
7 MASTER WARNING SYSTEM (N51)
8 CONTROL SURFACES OUT OF TRIM (N93)
9 GROUND IDLE OVERSPEED PROTECTION (N63)
10 D.C. POWER DISTRIBUTION (N03B)
ART ID # HA00FB90898AA
25-8NA5-60 SH1
DWG ISS-2

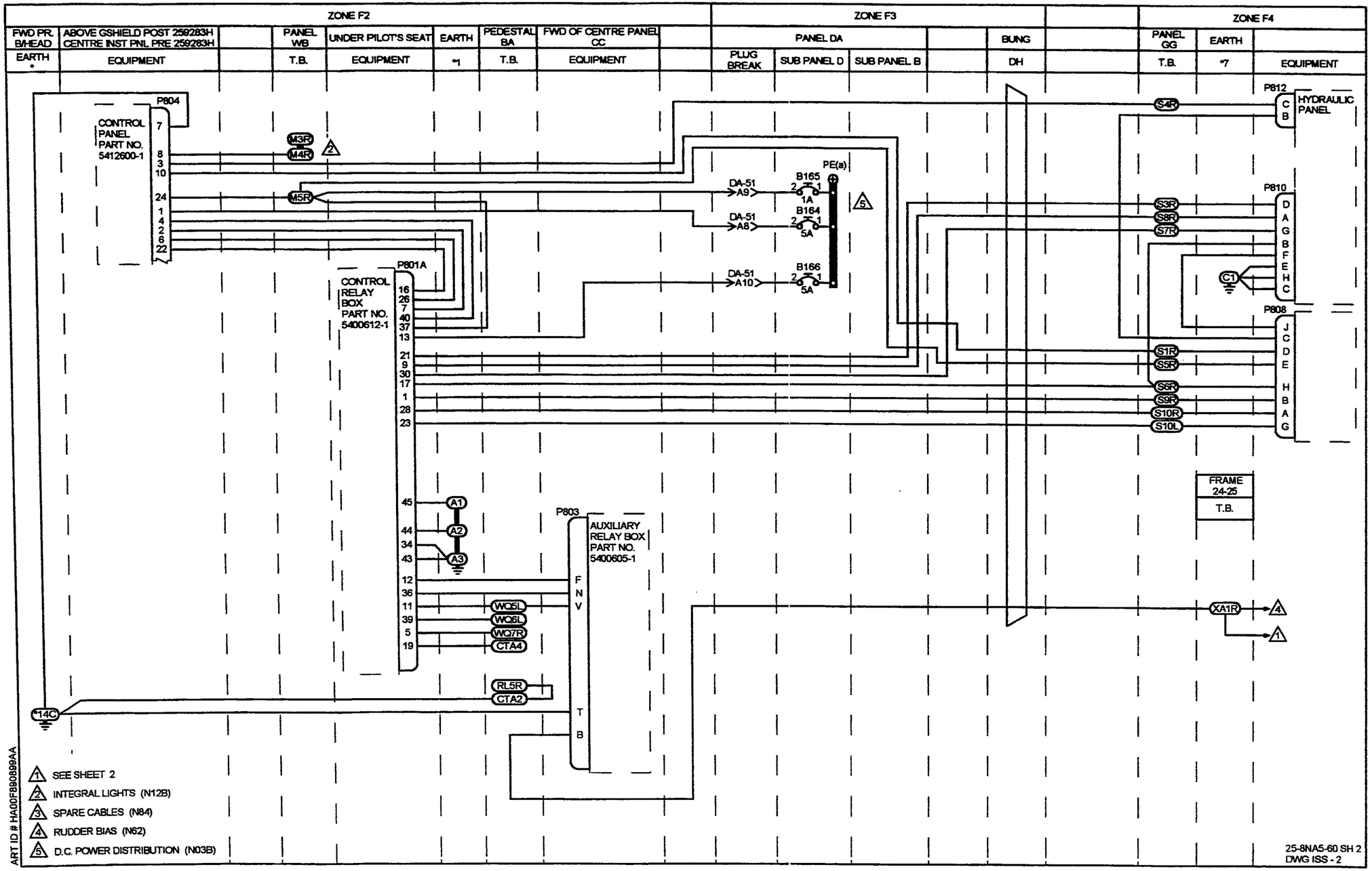
ZONE F2
ZONE F3
ZONE F4
FWD PR. B/HEAD EARTH
ABOVE GSHIELD POST 259283H CENTRE INST PNL PRE 259283H
EQUIPMENT
PANEL WB T.B.
UNDER PILOT'S SEAT EQUIPMENT
EARTH *1
PEDESTAL BA T.B.
FWD OF CENTRE PANEL CC EQUIPMENT
PANEL DA
PLUG BREAK
SUB PANEL D
SUB PANEL B
BUNG DH
PANEL GG T.B.
EARTH *7
EQUIPMENT
P804
CONTROL PANEL PART NO. 5412600-1
P801A
CONTROL RELAY BOX PART NO. 5400612-1
P803
AUXILIARY RELAY BOX PART NO. 5400605-1
PE(a)
B165 1A
B164 5A
B166 5A
DA-51 A9
DA-51 A8
DA-51 A10
P812 HYDRAULIC PANEL
P810
P808
FRAME 24-25 T.B.
M3R
M4R
M5R
S4R
S3R
S8R
S7R
C1
S1R
S5R
S6R
S9R
S10R
S10L
A1
A2
A3
WQ5L
WQ6L
WQ7R
CTA4
RL5R
CTA2
*14C
XA1R
F N V
T B
1 SEE SHEET 2
2 INTEGRAL LIGHTS (N12B)
3 SPARE CABLES (N84)
4 RUDDER BIAS (N62)
5 D.C. POWER DISTRIBUTION (N03B)
ART ID # HA00F890899AA
25-8NA5-60 SH 2
DWG ISS - 2

IDENT	PART NUMBER	1234567 NOMENCLATURE	EFFECT FROM TO	UNITS PER ASSY
		THRUST REVERSE	028028 091091 094094 097097 111111 113113 123125 127129 132132 135135 138142 144145 147147 150160 162162 166166 168171 177181 183183 185185 187189 191191 193193 195196 199205 207209 216218 220221 223223 225225 230239 241242 253256 259259 263263 272274 276276	
	25-8NA5-60	WIRING DIAGRAM- (MOD 259283C)		RF
B161-DAD	483TCG11J25-5A	.CIRCUIT BREAKER-5AMP (VU0091)		1
B162-DAD	483TCG11J25-1A	.CIRCUIT BREAKER-1AMP (VU0091)		1
B163-DAD	483TCG11J25-5A	.CIRCUIT BREAKER-5AMP (VU0091)		1
B164-DAD	483TCG11J25-5A	.CIRCUIT BREAKER-5AMP (VU0091)		1
B165-DAD	483TCG11J25-1A	.CIRCUIT BREAKER-1AMP (VU0091)		1
		MISSING ITEM NO. NOT APPLICABLE		

– ITEM NOT ILLUSTRATED

IDENT	PART NUMBER	1234567 NOMENCLATURE	EFFECT FROM TO	UNITS PER ASSY
B166-DAD	483TCG11J25-5A	.CIRCUIT BREAKER-5AMP (VU0091)		1
CTA-BA	HWBUN1736S5B	.TERMINAL BLOCK- (VK0574)		1
DA51-P	MTC100YH1-003	.SHELL-PLUG (VK1010) (USED WITH WAFERS: TYPE A, MTC100KT1-1101 DUMMY, MTCX1X100-100)	028028 091091 094094 097097 111111 113113 123125 127129 132132 135135 138142 144145 147147 150160 162162 166166 168171 177181 183183 185185 187189 191191 193193 195196 199205 207209 216218 220221 223223 225225 230239 241242 253254	1
DA51-P	MTC100YH1-003	.SHELL-PLUG (VK1010) (USED WITH INSERT: MTC100YC1-005)	255256 259259 263263 272274 276276	1
		MISSING ITEM NO. NOT APPLICABLE		

– ITEM NOT ILLUSTRATED

IDENT	PART NUMBER	1234567 NOMENCLATURE	EFFECT FROM TO	UNITS PER ASSY
DA51-R	MTC100YH1-004	.SHELL-RECEPTACLE (VK1010) (USED WITH WAFERS: TYPE A, MTC100KT1-1103 DUMMY, MTCX1X100-100)	028028 091091 094094 097097 111111 113113 123125 127129 132132 135135 138142 144145 147147 150160 162162 166166 168171 177181 183183 185185 187189 191191 193193 195196 199205 207209 216218 220221 223223 225225 230239 241242 253254	1
DA51-R	MTC100YH1-004	.SHELL-RECEPTACLE (VK1010) (USED WITH INSERT: MTC100YC1-006)	255256 259259 263263 272274 276276	1
DC	422254-8	.BUNG- (VK1793)		1
DG	422255-8	.BUNG- (VK1793)		1
DH	422255-9	.BUNG- (VK1793)		1
HP	HWBUN1736D5B	.TERMINAL BLOCK- (VK0574)		1
KK	72544-030-0AV2	.TERMINAL BLOCK- (VK0574)		1
		MISSING ITEM NO. NOT APPLICABLE		

– ITEM NOT ILLUSTRATED

IDENT	PART NUMBER	1234567 NOMENCLATURE	EFFECT FROM TO	UNITS PER ASSY
KP	1EN1-14N119	.MICRO SWITCH- (V91929) (OPT (VK6596))		1
L-WA	72444-030-0AV2	.TERMINAL BLOCK- (VK0574)		1
M-WA	72444-030-0AV2	.TERMINAL BLOCK- (VK0574)		1
M-WB	72444-030-0AV2	.TERMINAL BLOCK- (VK0574)		1
PQ	HWBUN1146D10B	.TERMINAL BLOCK- (VK0574)		1
P3-JA-P	BAEREF000004075	.CONNECTOR-PIN (6026-22-41PWCONDD (VK1793))		1
P3-JA-R	BAEREF000004149	.CONNECTOR-SOCKET (6027-22-41SWCONDD (VK1793))		1
P801A	BAEREF000004560	.CONNECTOR-CONTROL RELAY BOX (DPX2MA455-455-33B0001 (V71468) (OPT (VK0316)))		1
P801B	BAEREF000004560	.CONNECTOR-CONTROL RELAY BOX (DPX2MA455-455-33B0001 (V71468) (OPT (VK0316)))		1
P802	DEMA9S	.CONNECTOR-SOCKET,TIME DELAY (VK0316) (USED WITH: SHELL DE44994 SCREWLOCK D20419)		1
P803	MS3126F14-19S	.CONNECTOR-AUXILIARY RELAY BOX (VK0316)		1
P804	205209-1	.CONNECTOR-CONTROL PANEL (VK1636) (USED WITH BACKSHELL: 206478-4)		1
P807	MS3126F12-10S	.CONNECTOR- (VK0316)		1
P808	MS3126F12-10S	.CONNECTOR- (VK0316)		1
P809	PT08SE12-8SSR	.CONNECTOR-HYDRAULIC PANEL (VK0690)		1
P810	PT08SE12-8SSR	.CONNECTOR-HYDRAULIC PANEL (VK0690)		1
		MISSING ITEM NO. NOT APPLICABLE		

– ITEM NOT ILLUSTRATED

IDENT	PART NUMBER	1234567 NOMENCLATURE	EFFECT FROM TO	UNITS PER ASSY
P811	MS3108R10SL3S	.CONNECTOR-HYDRAULIC PANEL (VK0316) (USED WITH CLAMP: MS3057-4A)		1
P812	MS3108R10SL3S	.CONNECTOR-HYDRAULIC PANEL (VK0316) (USED WITH CLAMP: MS3057-4A)		1
R-GG	HWBUN1146D10B	.TERMINAL BLOCK- (VK0574)		1
RL-BA	HWBUN1736D5B	.TERMINAL BLOCK- (VK0574)		1
S-GG	HWBUN1146D10B	.TERMINAL BLOCK- (VK0574)		1
WQ-BA	HWBUN1736D10B	.TERMINAL BLOCK- (VK0574)		1
XA	HWBUN1146D5B	.TERMINAL BLOCK- (VK0574)		1
X6-DAB	MRTB20E057-111	.TERMINAL JUNCTION MODULE- (V14283)		1
Y15-DAB	MRTB20E057-111	.TERMINAL JUNCTION MODULE- (V14283)		1
		MISSING ITEM NO. NOT APPLICABLE		

– ITEM NOT ILLUSTRATED

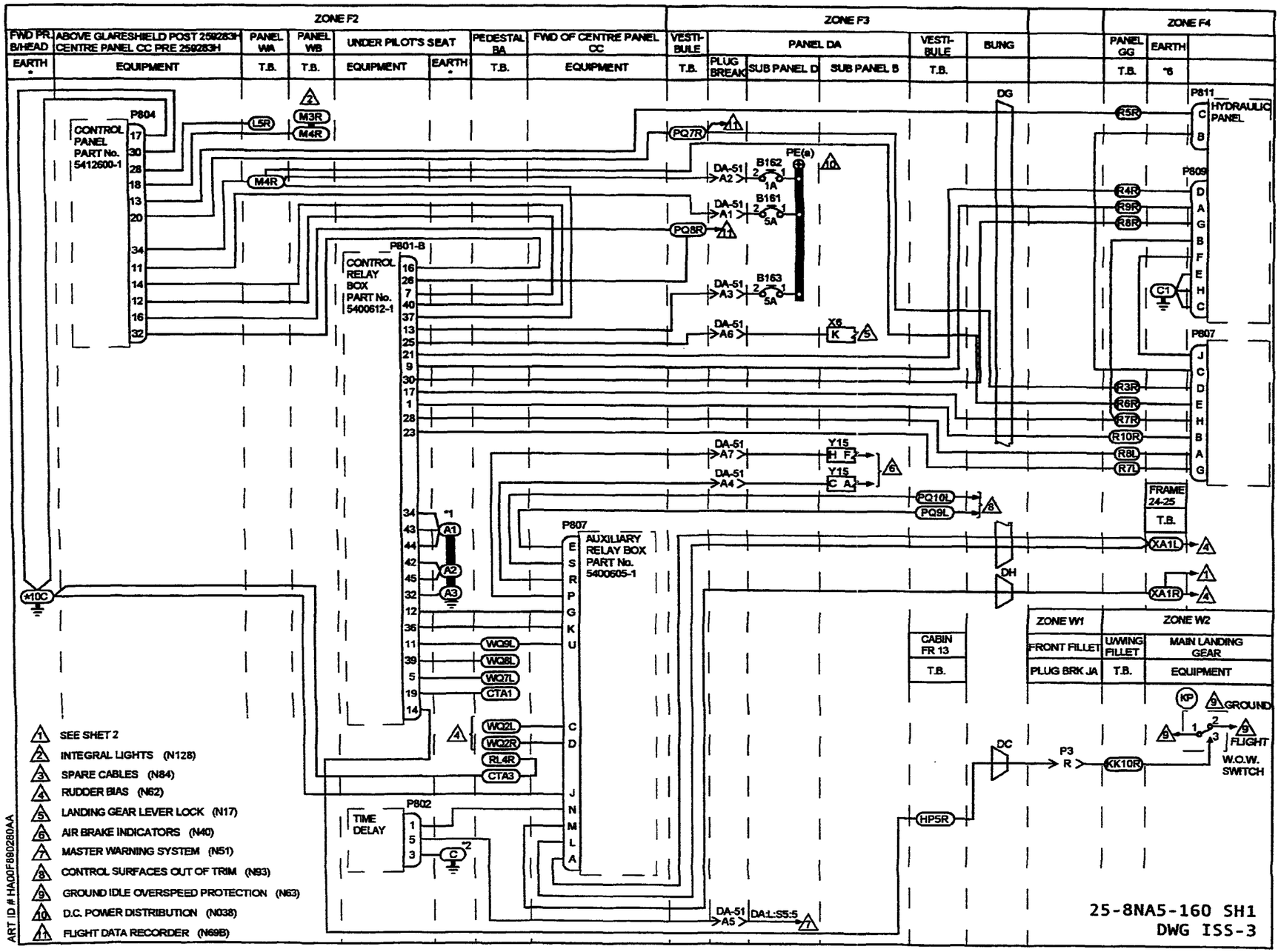
ZONE F2
ZONE F3
ZONE F4
FWD PR. B/HEAD
ABOVE GLARESHIELD POST 259283H CENTRE PANEL CC PRE 259283H
PANEL WA
PANEL WB
UNDER PILOT'S SEAT
PEDESTAL BA
FWD OF CENTRE PANEL CC
VESTI-BULE
PANEL DA
VESTI-BULE
BUNG
PANEL GG
EARTH
EQUIPMENT
T.B.
PLUG BREAK
SUB PANEL D
SUB PANEL B
CONTROL PANEL PART No. 5412600-1
P804
CONTROL RELAY BOX PART No. 5400612-1
P801-B
AUXILIARY RELAY BOX PART No. 5400605-1
P807
TIME DELAY
P802
HYDRAULIC PANEL
P811
P809
P807
FRAME 24-25
DG
DH
DC
CABIN FR 13
ZONE W1
ZONE W2
FRONT FILLET
U/WING FILLET
MAIN LANDING GEAR
PLUG BRK JA
GROUND
FLIGHT
W.O.W. SWITCH
SEE SHET 2
INTEGRAL LIGHTS (N128)
SPARE CABLES (N84)
RUDDER BIAS (N62)
LANDING GEAR LEVER LOCK (N17)
AIR BRAKE INDICATORS (N40)
MASTER WARNING SYSTEM (N51)
CONTROL SURFACES OUT OF TRIM (N93)
GROUND IDLE OVERSPEED PROTECTION (N63)
D.C. POWER DISTRIBUTION (N038)
FLIGHT DATA RECORDER (N69B)
ART ID # HA00F690280AA
25-8NA5-160 SH1
DWG ISS-3

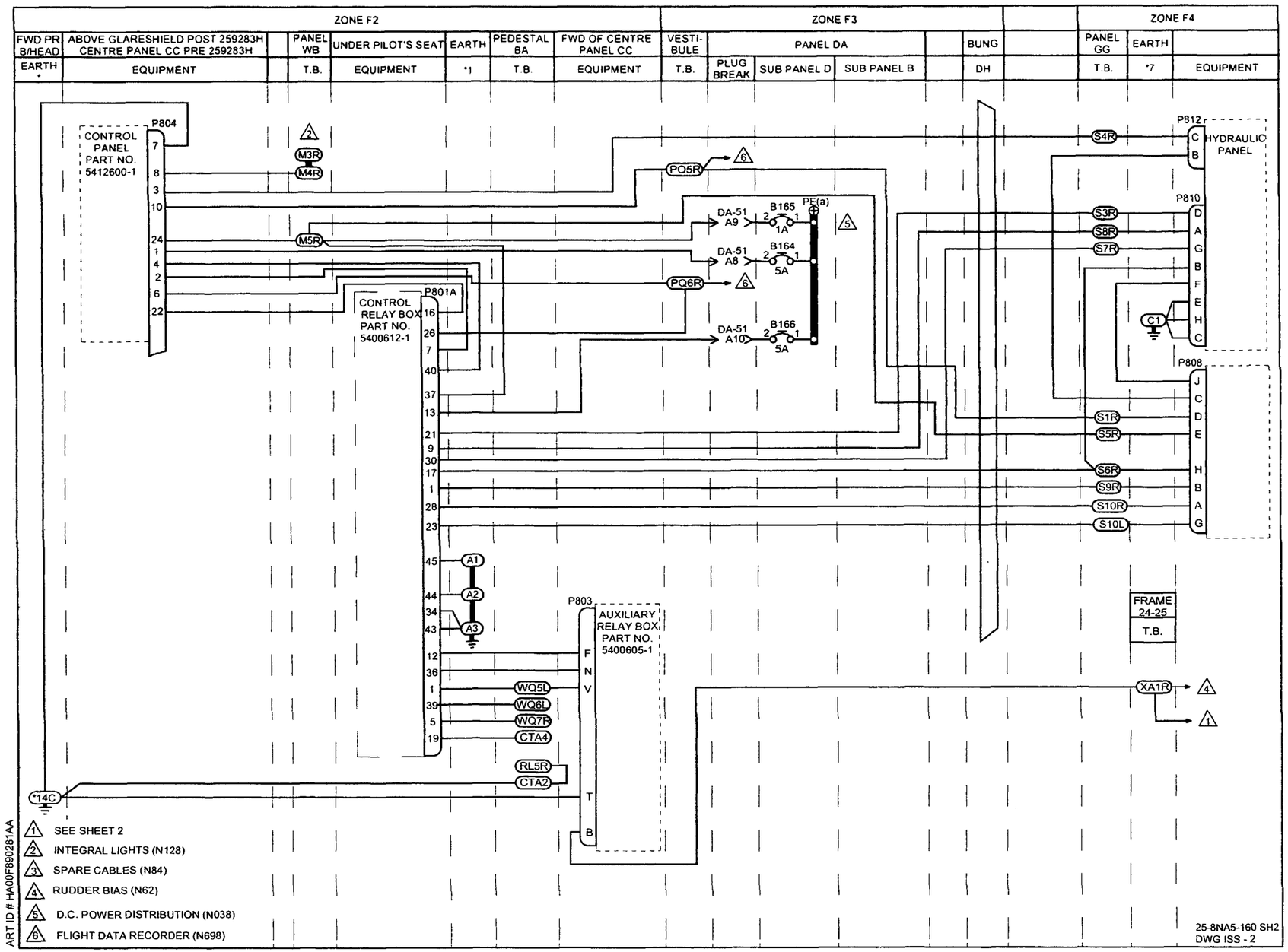
ZONE F2
ZONE F3
ZONE F4
FWD PR B/HEAD
ABOVE GLARESHIELD POST 259283H CENTRE PANEL CC PRE 259283H
PANEL WB
UNDER PILOT'S SEAT
EARTH
PEDESTAL BA
FWD OF CENTRE PANEL CC
VESTI-BULE
PANEL DA
BUNG
PANEL GG
EARTH
EARTH
EQUIPMENT
T.B.
EQUIPMENT
*1
T.B.
EQUIPMENT
T.B.
PLUG BREAK
SUB PANEL D
SUB PANEL B
DH
T.B.
*7
EQUIPMENT
CONTROL PANEL PART NO. 5412600-1
P804
CONTROL RELAY BOX PART NO. 5400612-1
P801A
P803
AUXILIARY RELAY BOX PART NO. 5400605-1
P812
HYDRAULIC PANEL
P810
P808
FRAME 24-25
T.B.
M3R
M4R
M5R
PQ5R
PQ6R
DA-51 A9
DA-51 A8
DA-51 A10
B165
B164
B166
1A
5A
5A
PE(a)
S4R
S3R
S8R
S7R
C1
S1R
S5R
S6R
S9R
S10R
S10L
A1
A2
A3
WQ5L
WQ6L
WQ7R
CTA4
RL5R
CTA2
*14C
XA1R
F
N
V
T
B
1 SEE SHEET 2
2 INTEGRAL LIGHTS (N128)
3 SPARE CABLES (N84)
4 RUDDER BIAS (N62)
5 D.C. POWER DISTRIBUTION (N038)
6 FLIGHT DATA RECORDER (N698)
ART ID # HA00F890281AA
25-8NA5-160 SH2
DWG ISS - 2

IDENT	PART NUMBER	1234567 NOMENCLATURE	EFFECT FROM TO	UNITS PER ASSY
		THRUST REVERSE	182182 197197	
	25-8NA5-160	WIRING DIAGRAM- (MOD 259861A)		RF
B161-DAD	483TCG11J25-5A	.CIRCUIT BREAKER-5AMP (VU0091)		1
B162-DAD	483TCG11J25-1A	.CIRCUIT BREAKER-1AMP (VU0091)		1
B163-DAD	483TCG11J25-3A	.CIRCUIT BREAKER-5AMP (VU0091)		1
B164-DAD	483TCG11J25-5A	.CIRCUIT BREAKER-5AMP (VU0091)		1
B165-DAD	483TCG11J25-1A	.CIRCUIT BREAKER-1AMP (VU0091)		1
B166-DAD	483TCG11J25-3A	.CIRCUIT BREAKER-5AMP (VU0091)		1
CTA-BA	HWBUN1736S5B	.TERMINAL BLOCK- (VK0574)		1
DA51-P	MTC100YH1-003	.SHELL-PLUG (VK1010) (USED WITH WAFERS: TYPE A, MTC100KT1-1101 DUMMY, MTCX1X100-100)		1
DA51-R	MTC100YH1-004	.SHELL-RECEPTACLE (VK1010) (USED WITH WAFERS: TYPE A, MTC100KT1-1103 DUMMY, MTCX1X100-100)		1
DC	422254-8	.BUNG- (VK1793)		1
DG	422255-8	.BUNG- (VK1793)		1
DH	422255-9	.BUNG- (VK1793)		1
HP	HWBUN1736D5B	.TERMINAL BLOCK- (VK0574)		1
KK	72544-030-0AV2	.TERMINAL BLOCK- (VK0574)		1
KP	1EN1-14N119	.MICRO SWITCH- (V91929) (OPT (VK6596))		1
L-WA	72444-030-0AV2	.TERMINAL BLOCK- (VK0574)		1
M-WA	72444-030-0AV2	.TERMINAL BLOCK- (VK0574)		1
M-WB	72444-030-0AV2	.TERMINAL BLOCK- (VK0574)		1
PQ	HWBUN1146D10B	.TERMINAL BLOCK- (VK0574)		1
		MISSING ITEM NO. NOT APPLICABLE		

– ITEM NOT ILLUSTRATED

IDENT	PART NUMBER	1234567 NOMENCLATURE	EFFECT FROM TO	UNITS PER ASSY
P3-JA-P	BAEREF000004075	.CONNECTOR-PIN (6026-22-41PWCONDD (VK1793))		1
P3-JA-R	BAEREF000004149	.CONNECTOR-SOCKET (6027-22-41SWCONDD (VK1793))		1
P801A	BAEREF000004560	.CONNECTOR- (DPX2MA455-455-33B0001 (V71468)) (USED WITH CONTROL RELAY BOX: 5400612-1 (V56732))		1
P801B	BAEREF000004560	.CONNECTOR- (DPX2MA455-455-33B0001 (V71468)) (USED WITH CONTROL RELAY BOX: 5400612-1 (V56732))		1
P802	DEMA9S	.CONNECTOR-SOCKET (V71468) (USED WITH: SHELL DE44994 SCREWLOCK D20419 (V71468) TIME DELAY UNIT 5400619-1 (V56732))		1
P803	MS3126F14-19S	.CONNECTOR-AUXILIARY RELAY BOX (V96906) (PRE SB24-3224)	182182 197197	1
P804	205209-1	.CONNECTOR- (VK1636) (USED WITH BACKSHELL: 206478-4 (VK1636) THRUST REVERSER CONTROL PANEL 5412600-1 (V56732))		1
P807	MS3126F12-10S	.CONNECTOR- (V71468)		1
P808	MS3126F12-10S	.CONNECTOR- (V71468)		1
P809	PT08SE12-8SSR	.CONNECTOR-HYDRAULIC PANEL (V71468)		1
P810	PT08SE12-8SSR	.CONNECTOR-HYDRAULIC PANEL (V71468)		1
		MISSING ITEM NO. NOT APPLICABLE		

– ITEM NOT ILLUSTRATED

IDENT	PART NUMBER	1234567 NOMENCLATURE	EFFECT FROM TO	UNITS PER ASSY
P811	MS3108R10SL3S	.CONNECTOR-HYDRAULIC PANEL (V71468) (USED WITH CLAMP: MS3057-4A)		1
P812	MS3108R10SL3S	.CONNECTOR-HYDRAULIC PANEL (V71468) (USED WITH CLAMP: MS3057-4A)		1
R-GG	HWBUN1146D10B	.TERMINAL BLOCK- (VK0574)		1
RL-BA	HWBUN1736D5B	.TERMINAL BLOCK- (VK0574)		1
S-GG	HWBUN1146D10B	.TERMINAL BLOCK- (VK0574)		1
WQ-BA	HWBUN1736D10B	.TERMINAL BLOCK- (VK0574)		1
XA	HWBUN1146D5B	.TERMINAL BLOCK- (VK0574)		1
X6-DAB	MRTB20E057-111	.TERMINAL JUNCTION MODULE- (V14283)		1
Y15-DAB	MRTB20E057-111	.TERMINAL JUNCTION MODULE- (V14283)		1
		MISSING ITEM NO. NOT APPLICABLE		

- ITEM NOT ILLUSTRATED

CHAPTER

79

OIL

CHAPTER 79 - OIL

TABLE OF CONTENTS

SUBJECT	CHAPTER SECTION UNIT	FIGURE	EFFECT
INDICATING	79-30-00		
OIL PRESSURE AND TEMPERATURE	79-30-10	2	091276

CH-SECT-UNIT-FIG	PAGE NO.	DATE
*79	1	AUG 31/03
79-30-00	1	MAY 31/02
79-30-10- 2	0	MAY 31/02
79-30-10- 2	0A	NOV 30/02
79-30-10- 2	1	NOV 30/02
79-30-10- 2	2	MAY 31/02
79-30-10- 2	3	MAY 31/02
79-30-10- 2	4	MAY 31/02

CH-SECT-UNIT-FIG	PAGE NO.	DATE

*THE ASTERISK INDICATES PAGES CHANGED OR ADDED BY THE CURRENT REVISION

INDICATING

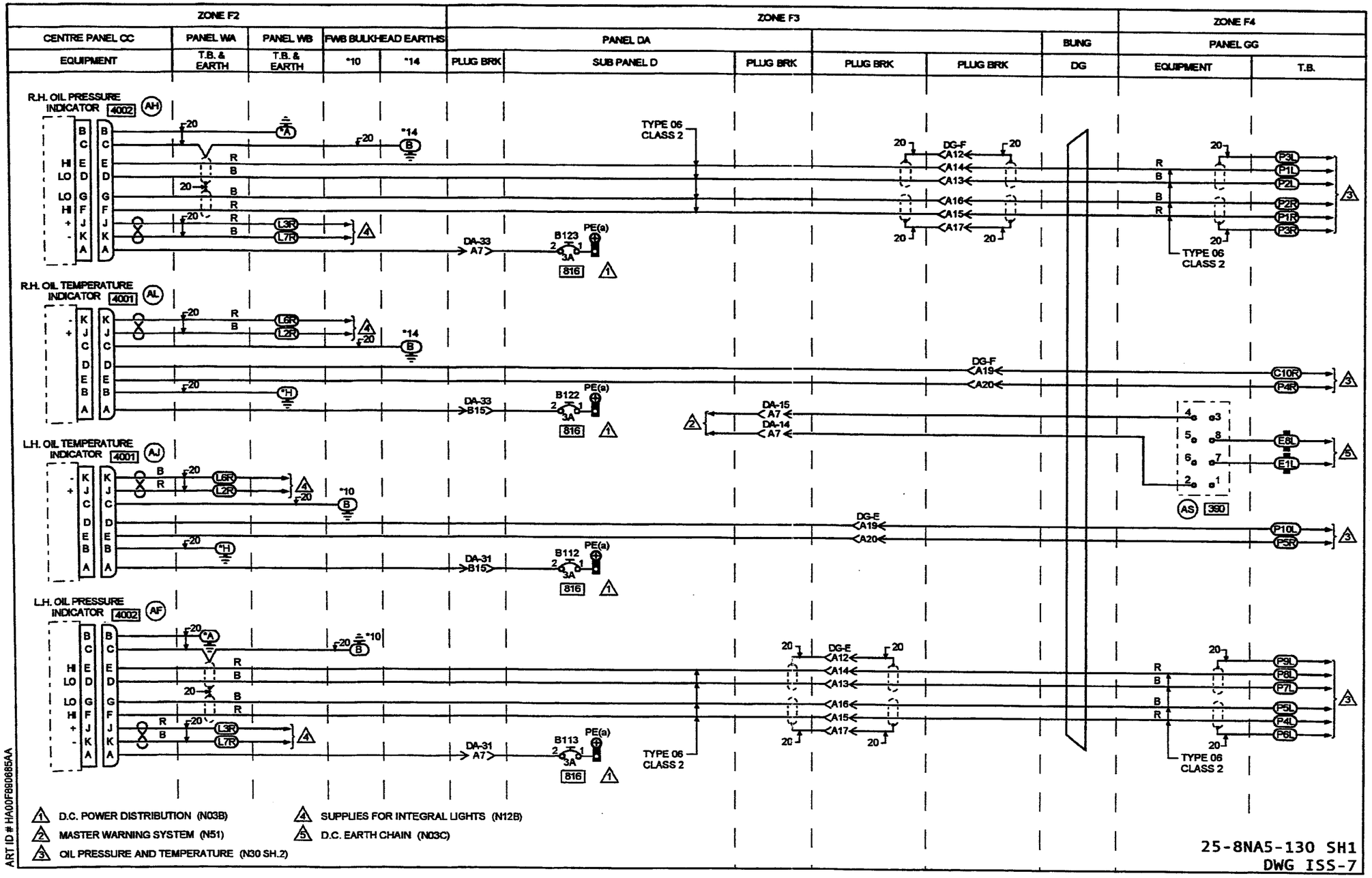
ZONE F2
ZONE F3
ZONE F4
CENTRE PANEL CC
PANEL WA
PANEL WB
FWB BULKHEAD EARTHS
PANEL DA
BUNG
PANEL GG
EQUIPMENT
T.B. & EARTH
T.B. & EARTH
*10
*14
PLUG BRK
SUB PANEL D
PLUG BRK
PLUG BRK
PLUG BRK
DG
EQUIPMENT
T.B.
R.H. OIL PRESSURE INDICATOR 4002 AH
R.H. OIL TEMPERATURE INDICATOR 4001 AL
L.H. OIL TEMPERATURE INDICATOR 4001 AJ
L.H. OIL PRESSURE INDICATOR 4002 AF
TYPE 06 CLASS 2
DG-F
DG-E
DA-33 A7
DA-33 B15
DA-31 B15
DA-31 A7
B123
B122
B112
B113
PE(a)
816
DA-15 A7
DA-14 A7
390
1 D.C. POWER DISTRIBUTION (N03B)
2 MASTER WARNING SYSTEM (N51)
3 OIL PRESSURE AND TEMPERATURE (N30 SH.2)
4 SUPPLIES FOR INTEGRAL LIGHTS (N12B)
5 D.C. EARTH CHAIN (N03C)
ART ID # HA00F980685AA
25-8NA5-130 SH1
DWG ISS-7

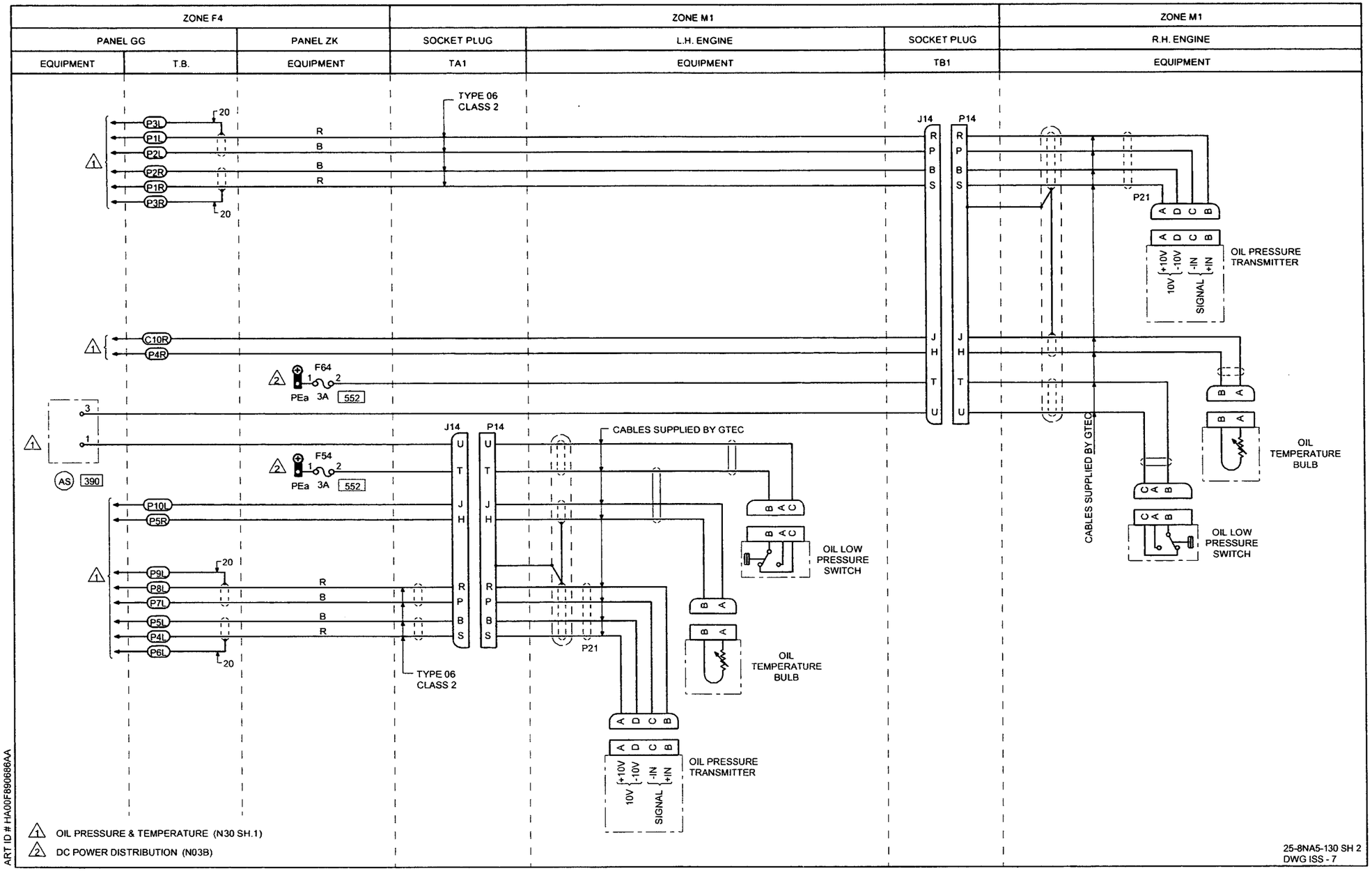
ZONE F4
ZONE M1
ZONE M1
PANEL GG
PANEL ZK
SOCKET PLUG
L.H. ENGINE
SOCKET PLUG
R.H. ENGINE
EQUIPMENT
T.B.
EQUIPMENT
TA1
EQUIPMENT
TB1
EQUIPMENT
TYPE 06 CLASS 2
J14
P14
P21
OIL PRESSURE TRANSMITTER
OIL TEMPERATURE BULB
OIL LOW PRESSURE SWITCH
CABLES SUPPLIED BY GTEC
F64
F54
PEa 3A 552
AS 390
TYPE 06 CLASS 2
1 OIL PRESSURE & TEMPERATURE (N30 SH.1)
2 DC POWER DISTRIBUTION (N03B)
ART ID # HA00F890686AA
25-8NA5-130 SH 2
DWG ISS - 7

	IDENT	PART NUMBER	1234567 NOMENCLATURE	EFFECT FROM TO	UNITS PER ASSY
			OIL PRESSURE AND TEMPERATURE	091276	
R		25-8NA5-130	WIRING DIAGRAM-		RF
R			(MOD 253149C)		
R			(MOD 25F505A)		
R			(PRE MOD 25F968A)		
	AF-CC	2121-01-0014	.INDICATOR-OIL PRESSURE (VU1588)		1
	AH-CC	2121-01-0014	.INDICATOR-OIL PRESSURE (VU1588)		1
	AJ-CC	2121-01-0013	.INDICATOR-OIL TEMPERATURE (VU1588)		1
	AL-CC	2121-01-0013	.INDICATOR-OIL TEMPERATURE (VU1588)		1
	AS-GG	TDA310	.TIME DELAY UNIT- (VU0235)		1
	B112-DAD	483TCG11J25-3A	.CIRCUIT BREAKER-3AMP (VU0091)		1
	B113-DAD	483TCG11J25-3A	.CIRCUIT BREAKER-3AMP (VU0091)		1
	B122-DAD	483TCG11J25-3A	.CIRCUIT BREAKER-3AMP (VU0091)		1
	B123-DAD	483TCG11J25-3A	.CIRCUIT BREAKER-3AMP (VU0091)		1
	C-GG	HWBUN1146D10B	.TERMINAL BLOCK- (VK0574)		1
	DA14-P	MTC100YH1-003	.SHELL-PLUG (VK1010) (USED WITH WAFERS: TYPE A, MTC100KT1-1101 TYPE B, MTC100KT1-1102)	091254	1
	DA14-P	MTC100YH1-003	.SHELL-PLUG (VK1010) (USED WITH INSERT: MTC100YC1-005)	255276	1
	DA14-R	MTC100YH1-004	.SHELL-RECEPTACLE (VK1010) (USED WITH WAFERS: TYPE A, MTC100KT1-1103 TYPE B, MTC100KT1-1104)	091254	1
	DA14-R	MTC100YH1-004	.SHELL-RECEPTACLE (VK1010) (USED WITH INSERT: MTC100YC1-006)	255276	1
	DA15-P	MTC100YH1-003	.SHELL-PLUG (VK1010) (USED WITH WAFERS: TYPE A, MTC100KT1-1101 TYPE B, MTC100KT1-1102)	091254	1
			MISSING ITEM NO. NOT APPLICABLE		

– ITEM NOT ILLUSTRATED

IDENT	PART NUMBER	1234567 NOMENCLATURE	EFFECT FROM TO	UNITS PER ASSY
DA15-P	MTC100YH1-003	.SHELL-PLUG (VK1010) (USED WITH INSERT: MTC100YC1-005)	255276	1
DA15-R	MTC100YH1-004	.SHELL-RECEPTACLE (VK1010) (USED WITH WAFERS: TYPE A, MTC100KT1-1103 TYPE B, MTC100KT1-1104)	091254	1
DA15-R	MTC100YH1-004	.SHELL-RECEPTACLE (VK1010) (USED WITH INSERT: MTC100YC1-006)	255276	1
DA31-P	MTC100YH2-009	.SHELL-PLUG (VK1010) (USED WITH WAFERS: TYPE A, MTC100KT2-1101 TYPE B, MTC100KT2-1102)	091254	1
DA31-P	MTC100YH2-009	.SHELL-PLUG (VK1010) (USED WITH INSERTS: PRIMARY MTC100YC1-001 SECONDARY MTC100YC1-002)	255276	1
DA31-R	MTC100YH2-010	.SHELL-RECEPTACLE (VK1010) (USED WITH WAFERS: TYPE A, MTC100KT2-1103 TYPE B, MTC100KT2-1104)	091254	1
DA31-R	MTC100YH2-010	.SHELL-RECEPTACLE (VK1010) (USED WITH INSERTS: PRIMARY MTC100YC1-003 SECONDARY MTC100YC1-004)	255276	1
DA33-P	MTC100YH2-009	.SHELL-PLUG (VK1010) (USED WITH WAFERS: TYPE A, MTC100KT2-1101 TYPE B, MTC100KT2-1102)	091254	1
DA33-P	MTC100YH2-009	.SHELL-PLUG (VK1010) (USED WITH INSERTS: PRIMARY MTC100YC1-001 SECONDARY MTC100YC1-002)	255276	1
DA33-R	MTC100YH2-010	.SHELL-RECEPTACLE (VK1010) (USED WITH WAFERS: TYPE A, MTC100KT2-1103 TYPE B, MTC100KT2-1104)	091254	1
		MISSING ITEM NO. NOT APPLICABLE		

– ITEM NOT ILLUSTRATED

IDENT	PART NUMBER	1234567 NOMENCLATURE	EFFECT FROM TO	UNITS PER ASSY
DA33-R	MTC100YH2-010	.SHELL-RECEPTACLE (VK1010) (USED WITH INSERTS: PRIMARY MTC100YC1-003 SECONDARY MTC100YC1-004)	255276	1
DG	422255-8	.BUNG- (VK1793)		1
DGE-P	MTC100YH2-009	.SHELL-PLUG (VK1010) (USED WITH WAFERS: TYPE A, MTC100KT2-1103 TYPE B, MTC100KT2-1104)	091254	1
DGE-P	MTC100YH2-009	.SHELL-PLUG (VK1010) (USED WITH INSERTS: PRIMARY MTC100YC1-003 SECONDARY MTC100YC1-004)	255276	1
DGE-R	MTC100YH2-010	.SHELL-RECEPTACLE (VK1010) (USED WITH WAFERS: TYPE A, MTC100KT2-1101 TYPE B, MTC100KT2-1102)	091254	1
DGE-R	MTC100YH2-010	.SHELL-RECEPTACLE (VK1010) (USED WITH INSERTS: PRIMARY MTC100YC1-001 SECONDARY MTC100YC1-002)	255276	1
DGF-P	MTC100YH2-009	.SHELL-PLUG (VK1010) (USED WITH WAFERS: TYPE A, MTC100KT2-1103 TYPE B, MTC100KT2-1104)	091254	1
DGF-P	MTC100YH2-009	.SHELL-PLUG (VK1010) (USED WITH INSERTS: PRIMARY MTC100YC1-003 SECONDARY MTC100YC1-004)	255276	1
DGF-R	MTC100YH2-010	.SHELL-RECEPTACLE (VK1010) (USED WITH WAFERS: TYPE A, MTC100KT2-1101 TYPE B, MTC100KT2-1102)	091254	1
DGF-R	MTC100YH2-010	.SHELL-RECEPTACLE (VK1010) (USED WITH INSERTS: PRIMARY MTC100YC1-001 SECONDARY MTC100YC1-002)	255276	1
E-GG	HWBUN1146D10B	.TERMINAL BLOCK- (VK0574)		1
		MISSING ITEM NO. NOT APPLICABLE		

– ITEM NOT ILLUSTRATED

IDENT	PART NUMBER	1234567 NOMENCLATURE	EFFECT FROM TO	UNITS PER ASSY
F54-ZK	5920-99-0120075	.FUSE-3AMP (VK0657)		1
F64-ZK	5920-99-0120075	.FUSE-3AMP (VK0657)		1
J14-TA1	D38999-20KG39SN	.CONNECTOR- (V77820) (USED WITH OUTLET: G8801S21 (VU0419))		1
J14-TB1	D38999-20KG39SN	.CONNECTOR- (V77820) (USED WITH OUTLET: G8801S21 (VU0419))		1
L-WA	72444-030-0AV2	.TERMINAL BLOCK- (VK0574)		1
L-WB	72444-030-0AV2	.TERMINAL BLOCK- (VK0574)		1
P-GG	HWBUN1146D10B	.TERMINAL BLOCK- (VK0574)		1
		MISSING ITEM NO. NOT APPLICABLE		

– ITEM NOT ILLUSTRATED

CHAPTER

80

STARTING

CHAPTER 80 - STARTING

TABLE OF CONTENTS

SUBJECT	CHAPTER SECTION UNIT	FIGURE	EFFECT
ENGINE START AND IGNITION	80-10-00		
ENGINE START AND IGNITION	80-10-10	4	091276

CH-SECT-UNIT-FIG	PAGE NO.	DATE	CH-SECT-UNIT-FIG	PAGE NO.	DATE
*80	1	AUG 31/03			
80-10-00	1	MAY 31/02			
80-10-10- 4	0	NOV 30/02			
80-10-10- 4	0A	NOV 30/02			
80-10-10- 4	1	MAY 31/02			
80-10-10- 4	2	MAY 31/02			
80-10-10- 4	3	MAY 31/02			
80-10-10- 4	4	MAY 31/02			
80-10-10- 4	5	MAY 31/02			
80-10-10- 4	6	MAY 31/02			

*THE ASTERISK INDICATES PAGES CHANGED OR ADDED BY THE CURRENT REVISION

ENGINE START AND IGNITION

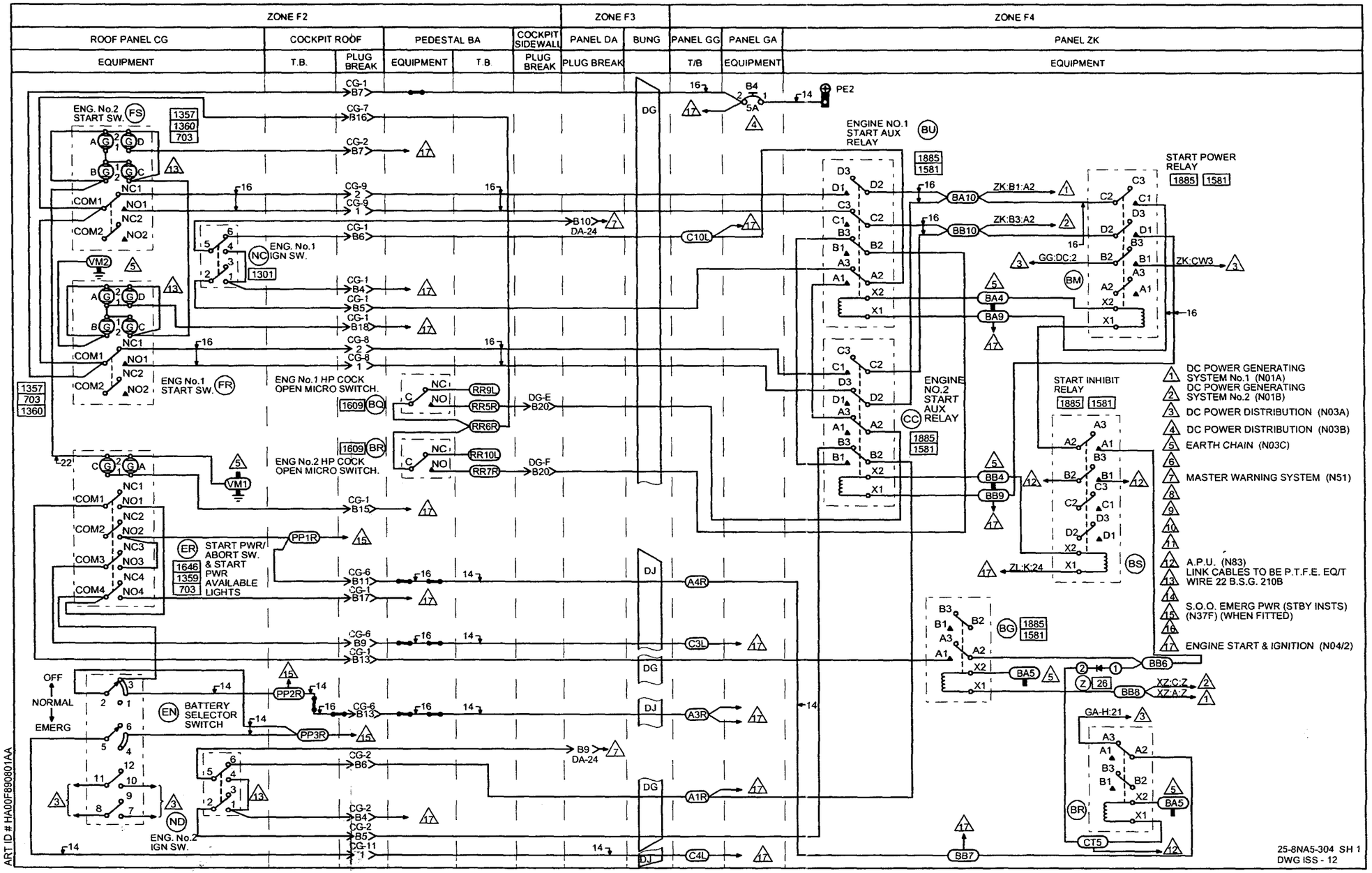
ZONE F2
ZONE F3
ZONE F4
ROOF PANEL CG
COCKPIT ROOF
PEDESTAL BA
COCKPIT SIDEWALL
PANEL DA
BUNG
PANEL GG
PANEL GA
PANEL ZK
EQUIPMENT
T.B.
PLUG BREAK
ENG. No.2 START SW. (FS)
ENG. No.1 IGN SW.
ENG No.1 START SW. (FR)
ENG No.1 HP COCK OPEN MICRO SWITCH.
ENG No.2 HP COCK OPEN MICRO SWITCH.
START PWR/ ABORT SW. & START PWR AVAILABLE LIGHTS
BATTERY SELECTOR SWITCH
ENG. No.2 IGN SW.
ENGINE NO.1 START AUX RELAY
ENGINE NO.2 START AUX RELAY
START POWER RELAY
START INHIBIT RELAY
1 DC POWER GENERATING SYSTEM No.1 (N01A)
2 DC POWER GENERATING SYSTEM No.2 (N01B)
3 DC POWER DISTRIBUTION (N03A)
4 DC POWER DISTRIBUTION (N03B)
5 EARTH CHAIN (N03C)
7 MASTER WARNING SYSTEM (N51)
12 A.P.U. (N83)
13 LINK CABLES TO BE P.T.F.E. EQ/T WIRE 22 B.S.G. 210B
15 S.O.O. EMERG PWR (STBY INSTS) (N37F) (WHEN FITTED)
17 ENGINE START & IGNITION (N04/2)
25-8NA5-304 SH 1
DWG ISS - 12
ART ID # HA00F890801AA

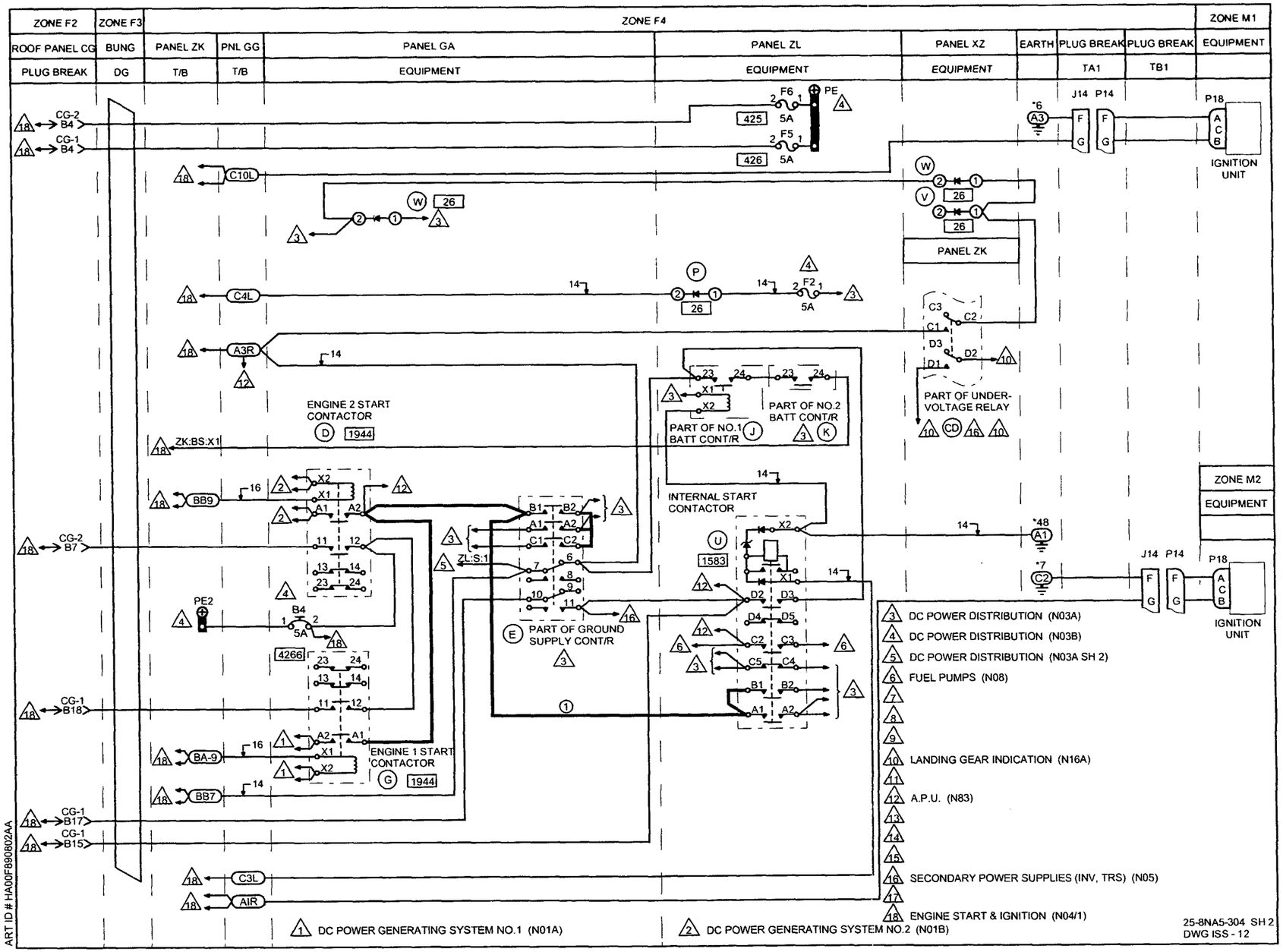
ZONE F2
ZONE F3
ZONE F4
ZONE M1
ROOF PANEL CG
BUNG
PANEL ZK
PNL GG
PANEL GA
PANEL ZL
PANEL XZ
EARTH
PLUG BREAK
PLUG BREAK
EQUIPMENT
PLUG BREAK
DG
T/B
T/B
EQUIPMENT
EQUIPMENT
EQUIPMENT
TA1
TB1
CG-2 B4
CG-1 B4
F6
PE
425 5A
F5
426 5A
J14 P14
P18
IGNITION UNIT
C10L
26
PANEL ZK
C4L
F2
5A
A3R
ENGINE 2 START CONTACTOR
1944
ZK:BS:X1
PART OF NO.1 BATT CONT/R
PART OF NO.2 BATT CONT/R
PART OF UNDER-VOLTAGE RELAY
ZONE M2
EQUIPMENT
BB9
CG-2 B7
INTERNAL START CONTACTOR
1583
ZL:S:1
PE2
B4
5A
4266
PART OF GROUND SUPPLY CONT/R
CG-1 B18
BA-9
ENGINE 1 START CONTACTOR
1944
BB7
CG-1 B17
CG-1 B15
C3L
AIR
3 DC POWER DISTRIBUTION (N03A)
4 DC POWER DISTRIBUTION (N03B)
5 DC POWER DISTRIBUTION (N03A SH 2)
6 FUEL PUMPS (N08)
10 LANDING GEAR INDICATION (N16A)
12 A.P.U. (N83)
16 SECONDARY POWER SUPPLIES (INV, TRS) (N05)
18 ENGINE START & IGNITION (N04/1)
1 DC POWER GENERATING SYSTEM NO.1 (N01A)
2 DC POWER GENERATING SYSTEM NO.2 (N01B)
25-8NA5-304 SH 2
DWG ISS - 12
ART ID # HA00F890802AA

IDENT	PART NUMBER	1234567 NOMENCLATURE	EFFECT FROM TO	UNITS PER ASSY
		ENGINE START AND IGNITION	091276	
	25-8NA5-304	WIRING DIAGRAM-		RF
		(MOD 253149C)		
		(MOD 25F505A)		
A-GG	HWBUN1146D10B	.TERMINAL BLOCK-		1
		(VK0574)		
BA-ZK	HWBUN1146S10B	.TERMINAL BLOCK-		1
		(VK0574)		
BB-ZK	HWBUN1146S10B	.TERMINAL BLOCK-		1
		(VK0574)		
BG-ZK	M300-1264	.RELAY-		1
		(VK6265)		
		(USED WITH SOCKET:		
		M12883-41-16		
		(V81349))		
BM-ZK	M400-1265	.RELAY-		1
		(VK6265)		
		(USED WITH SOCKET:		
		M12883-40-19		
		(V81349))		
BQ-BA	6HM7-3	.MICROSWITCH-		1
		(V91929)		
		(OPT (VK6596))		
BR-BA	6HM7-3	.MICROSWITCH-		1
		(V91929)		
		(OPT (VK6596))		
BR-ZK	M300-1264	.RELAY-		1
		(VK6265)		
		(USED WITH SOCKET:		
		M12883-41-16		
		(V81349))		
BS-ZK	M400-1265	.RELAY-		1
		(VK6265)		
		(USED WITH SOCKET:		
		M12883-40-19		
		(V81349))		
BU-ZK	M400-1265	.RELAY-		1
		(VK6265)		
		(USED WITH SOCKET:		
		M12883-40-19		
		(V81349))		
B4-GA	483TCG11J5-5A	.CIRCUIT BREAKER-5AMP		1
		(VU0091)		
C-GG	HWBUN1146D10B	.TERMINAL BLOCK-		1
		(VK0574)		
CC-ZK	M400-1265	.RELAY-		1
		(VK6265)		
		(USED WITH SOCKET:		
		M12883-40-19		
		(V81349))		
		MISSING ITEM NO. NOT APPLICABLE		

– ITEM NOT ILLUSTRATED

IDENT	PART NUMBER	1234567 NOMENCLATURE	EFFECT FROM TO	UNITS PER ASSY
CD-ZK	M400-1265	.RELAY- (VK6265) (USED WITH SOCKET: M12883-40-19 (V81349))		1
CG1-P	MTC100YH2-009	.SHELL-PLUG (VK1010) (USED WITH WAFERS: TYPE A, MTC100KT2-1101 TYPE B, MTC100KT2-1102)	091254	1
CG1-P	MTC100YH2-009	.SHELL-PLUG (VK1010) (USED WITH INSERTS: PRIMARY MTC100YC1-001 SECONDARY MTC100YC1-002)	255276	1
CG1-R	MTC100YH2-010	.SHELL-RECEPTACLE (VK1010) (USED WITH WAFERS: TYPE A, MTC100KT2-1103 TYPE B, MTC100KT2-1104)	091254	1
CG1-R	MTC100YH2-010	.SHELL-RECEPTACLE (VK1010) (USED WITH INSERTS: PRIMARY MTC100YC1-003 SECONDARY MTC100YC1-004)	255276	1
CG11-P	MTCR161-04P	.CONNECTOR-PIN (VK1010)		1
CG11-R	MTCR101-04S	.CONNECTOR-SOCKET (VK1010)		1
CG2-P	MTC100YH2-009	.SHELL-PLUG (VK1010) (USED WITH WAFERS: TYPE A, MTC100KT2-1101 TYPE B, MTC100KT2-1102)	091254	1
CG2-P	MTC100YH2-009	.SHELL-PLUG (VK1010) (USED WITH INSERTS: PRIMARY MTC100YC1-001 SECONDARY MTC100YC1-002)	255276	1
CG2-R	MTC100YH2-010	.SHELL-RECEPTACLE (VK1010) (USED WITH WAFERS: TYPE A, MTC100KT2-1103 TYPE B, MTC100KT2-1104)	091254	1
CG2-R	MTC100YH2-010	.SHELL-RECEPTACLE (VK1010) (USED WITH INSERTS: PRIMARY MTC100YC1-003 SECONDARY MTC100YC1-004)	255276	1

MISSING ITEM NO. NOT APPLICABLE

– ITEM NOT ILLUSTRATED

IDENT	PART NUMBER	1234567 NOMENCLATURE	EFFECT FROM TO	UNITS PER ASSY
CG6-P	MTC100YH2-009	.SHELL-PLUG (VK1010) (USED WITH WAFERS: TYPE A, MTC100KT2-1101 TYPE B, MTC100KT2-1102)	091254	1
CG6-P	MTC100YH2-009	.SHELL-PLUG (VK1010) (USED WITH INSERTS: PRIMARY MTC100YC1-001 SECONDARY MTC100YC1-002)	255276	1
CG6-R	MTC100YH2-010	.SHELL-RECEPTACLE (VK1010) (USED WITH WAFERS: TYPE A, MTC100KT2-1103 TYPE B, MTC100KT2-1104)	091254	1
CG6-R	MTC100YH2-010	.SHELL-RECEPTACLE (VK1010) (USED WITH INSERTS: PRIMARY MTC100YC1-003 SECONDARY MTC100YC1-004)	255276	1
CG7-P	MTC100YH2-009	.SHELL-PLUG (VK1010) (USED WITH WAFERS: TYPE A, MTC100KT2-1101 TYPE B, MTC100KT2-1102)	091254	1
CG7-P	MTC100YH2-009	.SHELL-PLUG (VK1010) (USED WITH INSERTS: PRIMARY MTC100YC1-001 SECONDARY MTC100YC1-002)	255276	1
CG7-R	MTC100YH2-010	.SHELL-RECEPTACLE (VK1010) (USED WITH WAFERS: TYPE A, MTC100KT2-1103 TYPE B, MTC100KT2-1104)	091254	1
CG7-R	MTC100YH2-010	.SHELL-RECEPTACLE (VK1010) (USED WITH INSERTS: PRIMARY MTC100YC1-003 SECONDARY MTC100YC1-004)	255276	1
CG8-P	MTCR161-04P	.CONNECTOR-PIN (VK1010)		1
CG8-R	MTCR101-04S	.CONNECTOR-SOCKET (VK1010)		1
CG9-P	MTCR161-04P	.CONNECTOR-PIN (VK1010)		1
CG9-R	MTCR101-04S	.CONNECTOR-SOCKET (VK1010)		1
CT-ZK	HWBUN1146S10B	.TERMINAL BLOCK- (VK0574)		1
		MISSING ITEM NO. NOT APPLICABLE		

— ITEM NOT ILLUSTRATED

IDENT	PART NUMBER	1234567 NOMENCLATURE	EFFECT FROM TO	UNITS PER ASSY
D-GA	A703FSS	.CONTACTOR- (V74063)		1
DA24-P	MTC100YH1-003	.SHELL-PLUG (VK1010) (USED WITH WAFERS: TYPE A, MTC100KT1-1101 TYPE B, MTC100KT1-1102)	091254	1
DA24-P	MTC100YH1-003	.SHELL-PLUG (VK1010) (USED WITH INSERT: MTC100YC1-005)	255276	1
DA24-R	MTC100YH1-004	.SHELL-RECEPTACLE (VK1010) (USED WITH WAFERS: TYPE A, MTC100KT1-1103 TYPE B, MTC100KT1-1104)	091254	1
DA24-R	MTC100YH1-004	.SHELL-RECEPTACLE (VK1010) (USED WITH INSERT: MTC100YC1-006)	255276	1
DG	422255-8	.BUNG- (VK1793)		1
DGE-P	MTC100YH2-009	.SHELL-PLUG (VK1010) (USED WITH WAFERS: TYPE A, MTC100KT2-1103 TYPE B, MTC100KT2-1104)	091254	1
DGE-P	MTC100YH2-009	.SHELL-PLUG (VK1010) (USED WITH INSERTS: PRIMARY MTC100YC1-003 SECONDARY MTC100YC1-004)	255276	1
DGE-R	MTC100YH2-010	.SHELL-RECEPTACLE (VK1010) (USED WITH WAFERS: TYPE A, MTC100KT2-1101 TYPE B, MTC100KT2-1102)	091254	1
DGE-R	MTC100YH2-010	.SHELL-RECEPTACLE (VK1010) (USED WITH INSERTS: PRIMARY MTC100YC1-001 SECONDARY MTC100YC1-002)	255276	1
DGF-P	MTC100YH2-009	.SHELL-PLUG (VK1010) (USED WITH WAFERS: TYPE A, MTC100KT2-1103 TYPE B, MTC100KT2-1104)	091254	1

MISSING ITEM NO. NOT APPLICABLE

– ITEM NOT ILLUSTRATED

IDENT	PART NUMBER	1234567 NOMENCLATURE	EFFECT FROM TO	UNITS PER ASSY
DGF-P	MTC100YH2-009	.SHELL-PLUG (VK1010) (USED WITH INSERTS: PRIMARY MTC100YC1-003 SECONDARY MTC100YC1-004)	255276	1
DGF-R	MTC100YH2-010	.SHELL-RECEPTACLE (VK1010) (USED WITH WAFERS: TYPE A, MTC100KT2-1101 TYPE B, MTC100KT2-1102)	091254	1
DGF-R	MTC100YH2-010	.SHELL-RECEPTACLE (VK1010) (USED WITH INSERTS: PRIMARY MTC100YC1-001 SECONDARY MTC100YC1-002)	255276	1
DJ	422255-7	.BUNG- (VK1793)		1
E-GA	LDG150Y4	.CONTACTOR- (VK4358)		1
EN-CG	4TP1-10	.SWITCH- (V91929) (OPT (VK6596))	091116	1
EN-CG	4TP1-10M	.SWITCH- (V91929) (OPT (VK6596))	117276	1
ER-CG	2D33	.SWITCH- (V91929) (OPT (VK6596))		1
FR-CG	2D72	.SWITCH- (V91929) (OPT (VK6596))		1
FS-CG	2D72	.SWITCH- (V91929) (OPT (VK6596))		1
F2-ZL	5920-99-0120076	.FUSE-5AMP (VK0657)		1
F5-ZL	5920-99-0120076	.FUSE-5AMP (VK0657)		1
F6-ZL	5920-99-0120076	.FUSE-5AMP (VK0657)		1
G-GA	A703FSS	.CONTACTOR- (V74063)		1
J-ZL	A770RSSA	.CONTACTOR- (V74063) (REF DWG 25NFZ3947-3)		1
J14-TA1	MS3450KT14S5S	.CONNECTOR- (V96906)		1
J14-TB1	MS3450KT14S5S	.CONNECTOR- (V96906)		1
		MISSING ITEM NO. NOT APPLICABLE		

– ITEM NOT ILLUSTRATED

IDENT	PART NUMBER	1234567 NOMENCLATURE	EFFECT FROM TO	UNITS PER ASSY
K-ZL	A770RSSA	.CONTACTOR- (V74063) (REF DWG 25NFZ3947-3)		1
NC-CG	2TP1-3	.SWITCH- (V91929) (OPT (VK6596))	091116	1
NC-CG	2TP1-3M	.SWITCH- (V91929) (OPT (VK6596))	117276	1
ND-CG	2TP1-3	.SWITCH- (V91929) (OPT (VK6596))	091116	1
ND-CG	2TP1-3M	.SWITCH- (V91929) (OPT (VK6596))	117276	1
P-ZL	CV7313	.DIODE- (VK0004) (OPT BYX38-600) (OPT BYX48-600) (POST SB24-317)		1
PP	HWBUN1146D10B	.TERMINAL BLOCK- (VK0574)		1
RR-BA	1HSN64	.MICRO SWITCH- (V91929) (OPT (VK6596))		1
U-ZL	A848MAS	.CONTACTOR- (V74063)		1
V-XZ	CV7313	.DIODE- (VK0004)		1
VM-CG	HWBUN1146S10B	.TERMINAL BLOCK- (VK0574)		1
W-GA	CV7313	.DIODE- (VK0004)		1
W-XZ	CV7313	.DIODE- (VK0004)		1
Z-ZK	CV7313	.DIODE- (VK0004)		1
		MISSING ITEM NO. NOT APPLICABLE		

– ITEM NOT ILLUSTRATED